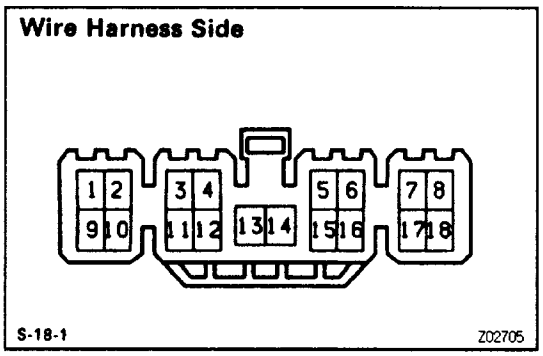

AIR CONDITIONER AMPLIFIER

AC0EM–01

A/C AMPLIFIER INSPECTION

INSPECT AMPLIFIER CIRCUIT

Disconnect the amplifier and inspect the connector on the wire harness side as shown in the chart.

Test conditions:

- Temperature control lever: MAX COOL
- Blower fan speed control switch: HI

Check for	Tester connection	Condition		Specified value
Continuity	8 – Engine control ECU terminal A/C	Constant		Continuity
	13 – Ground	Constant		Continuity
Resistance	3 – Ground	Constant		Continuity
	9–15	Engine coolant condition	85°C (185°F)	Approx. 1.35 kΩ
			90°C (194°F)	Approx. 1.19 kΩ
				Approx. 1.05 kΩ
	14–17	Ambient temperature at 25°C (77°F)		Approx. 1.5 kΩ
Voltage	1 – Ground	Ignition switch position	LOCK or ACC	No voltage
			ON	Battery voltage
	2 – Ground	Ignition switch position	LOCK or ACC	No voltage
			ON	Battery voltage
	4 – Ground	ECON switch position with ignition switch ON	OFF	No voltage
			ON	Battery voltage
	6 – Ground	A/C switch position with ignition switch ON	OFF	No voltage
			ON	Battery voltage
	7 – Ground	Ignition switch position	LOCK or ACC	No voltage
			ON	Battery voltage
	10 – Ground	Ignition switch position	LOCK or ACC	No voltage
			ON	Battery voltage
	11 –Ground	Ignition switch position	LOCK or ACC	No voltage
			ON	Battery voltage
	18 – Ground	Engine condition	Running	Approx. 10 to 14 v
			Stopped	N o voltage

V00830

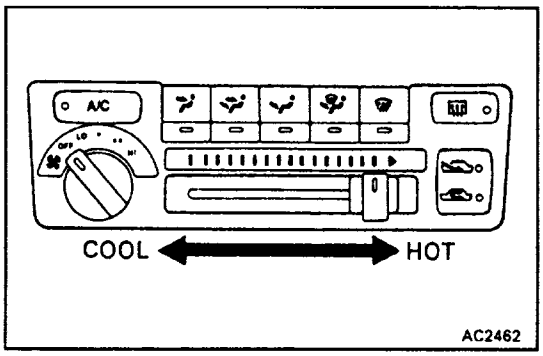

AIR CONDITIONING CONTROL ASSEMBLY

ON–VEHICLE INSPECTION

Move the control lever left and right and check for shiffness and bindings through the full range of the levers.

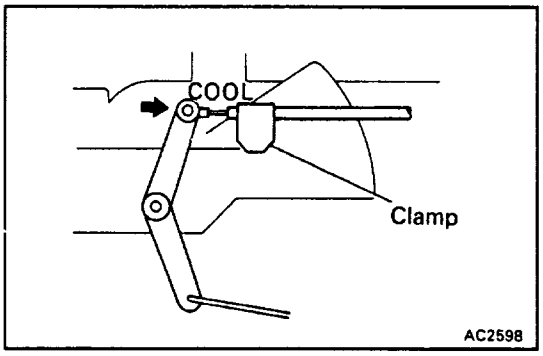

A/C CONTROL CABLES ADJUSTMENT

1. ADJUST AIR MIX DAMPER CONTROL CABLE

Set the air mix damper and the control levee to ” COOL”, then install the control cable and lock the clamp.

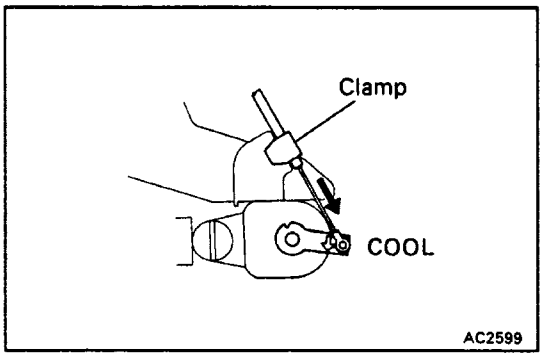

2. ADJUST WATER VALVE CONTROL CABLES

Set the water valve and the control lever to ”COOL”, then install the control cable and lock clamp.

AC0EJ–01

A/C CONTROL ASSEMBLY

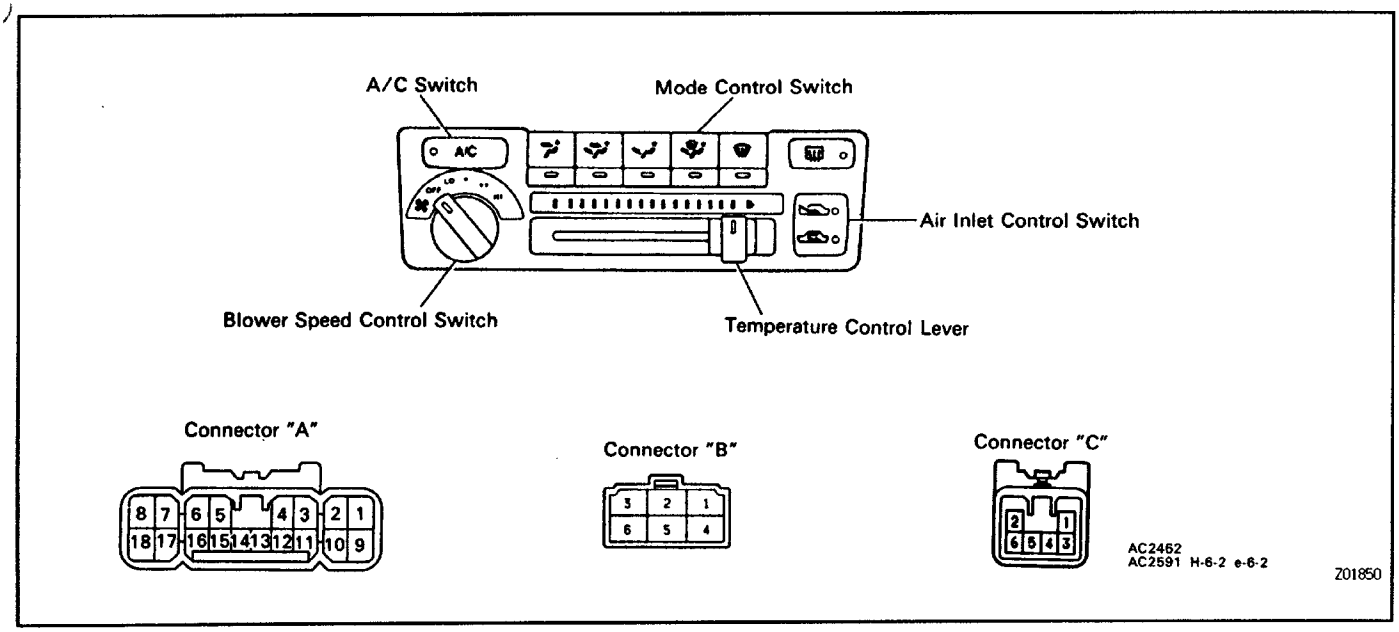

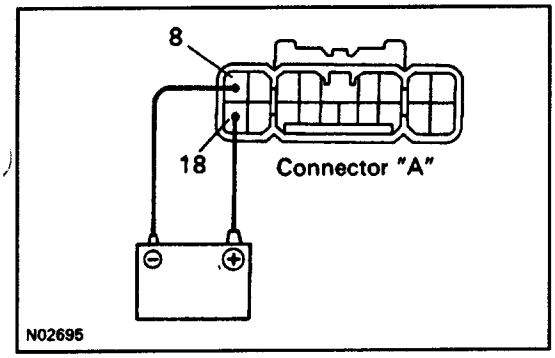

INSPECT ILLUMINATION OPERATION

Connect the positive (+) lead from the battery to terminal A–18 and the negative (–)lead to terminal A–8, then check that the illuminations light up.
If illuminations do not light, test the bulb.

AC0EK–01

BLOWER SPEED CONTROL SWITCH INSPECTION

INSPECT BLOWER SPEED CONTROL SWITCH CONTINUITY

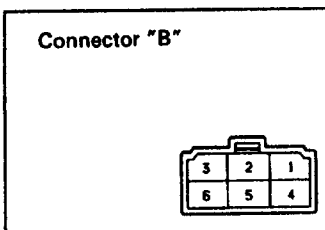

Terminal / Switch position	B–1	B–2	B–3	8–4	g–6
OFF					
LO				○	○
■	○			○	○
■ ■		○		○	○
HI			○	○	○

V00827

If continuity is not as specified, replace the blower speed control switch.

AC0EL–01

A/C SWITCH INSPECTION

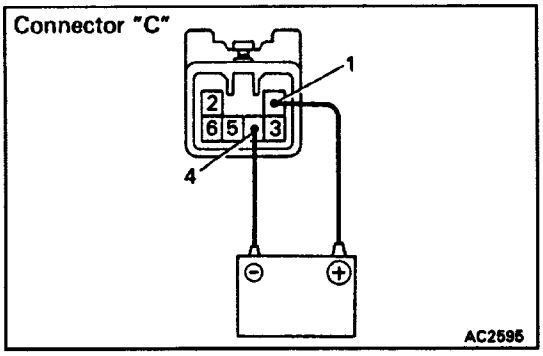

1. INSPECT ILLUMINATION

Connect the positive (+) lead from the battery to terminal C–1 and the negative (–) lead to terminal C –4, then check that the illumination lights up.
If illumination does not light up, test the bulb.

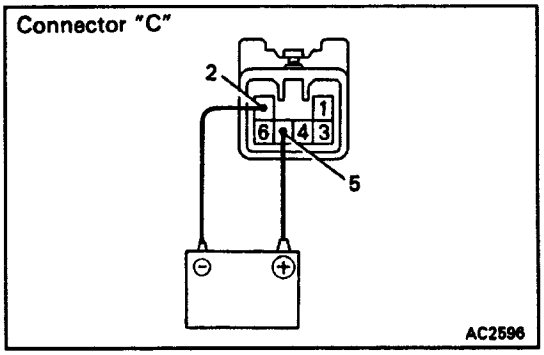

2. INSPECT INDICATOR

(a) Connect the positive (+) lead from the battery to terminal C–5 and the negative (–) lead to terminal C –2.

(b) Push the A/C switch button in and check that the indicator light up.

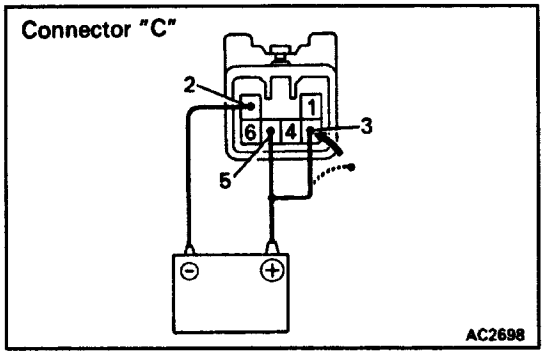

(c) Then, connect the positive (+) lead from the battery to terminal C–3 and check that the indicator dims.
If indicators operation is not as specified, replace the A/C switch.

3. INSPECT SWITCH A/C SWITCH CONTINUITY

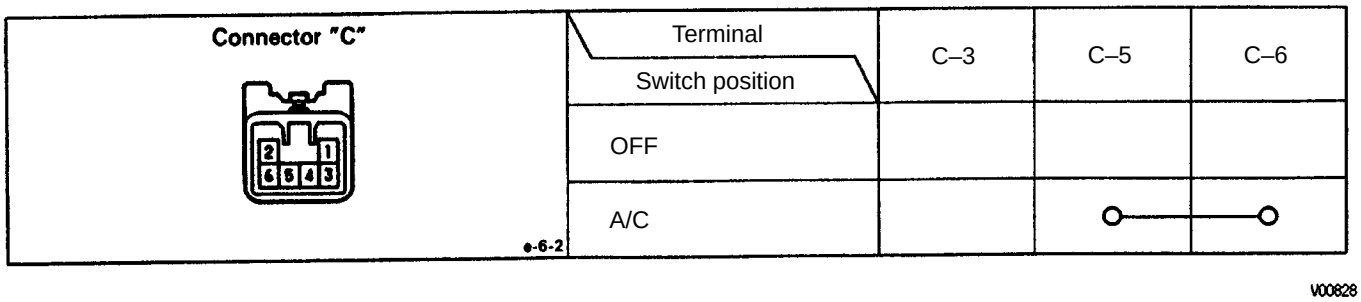

If continuity is not as specified, replace the A/C switch.

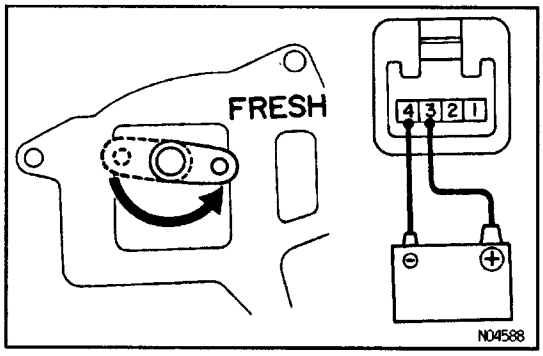

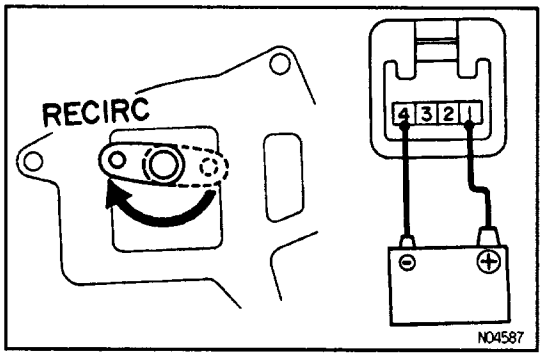

AIR INLET SERVOMOTOR

AC0E1-01

AIR INLET SERVOMOTOR INSPECTION

INSPECT SERVOMOTOR OPERATION

(a) Connect the positive (+) lead from the battery to terminal 3 and the negative (–) lead to terminal 4, check that the arm rotates to the ”FRESH” side smo–othly.

(b) Connect the positive (+) lead from the battery to terminal 1 and the negative (–) lead to terminal 4, check that the arm rotates to the ” RECIRC” side smoothly.

If operation is not as specified, replace the servomo–tor.

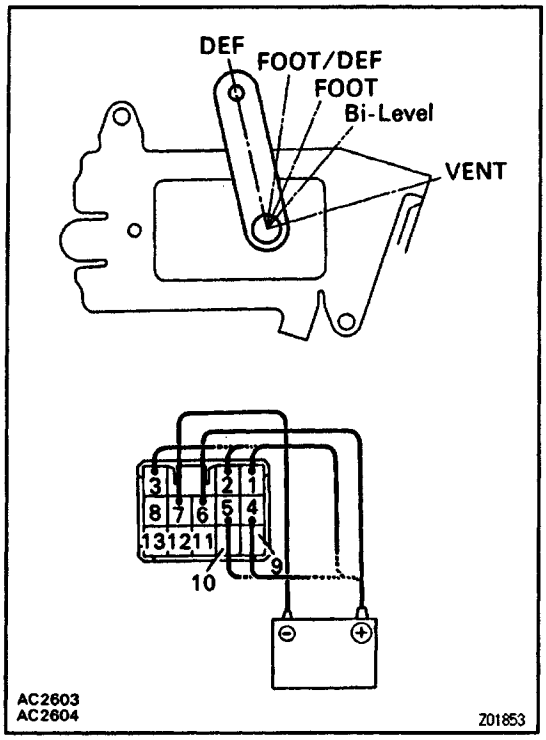

AIR OUTLET SERVOMOTOR

AIR OUTLET SERVOMOTER INSPECTION

INSPECT SERVOMOTOR OPERATION

(a) Connect the positive (+) lead from the battery to terminal 6 and the negative (–) lead to terminal 7.

(b) Connect the positive (+) lead from the battery to each terminal and check that the arm rotates to each position as shown.

If operation is not as specified, replace the servomo–tor.

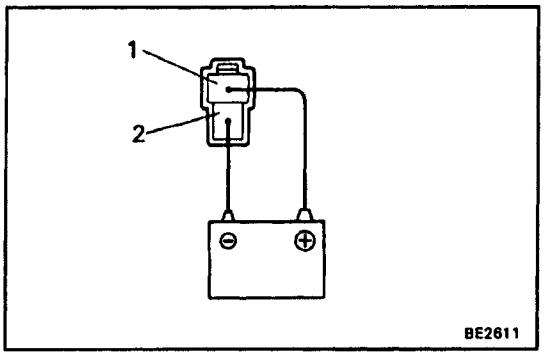

BLOWER MOTOR

AC0E0–01

BLOWER MOTOR INSPECTION

INSPECT BLOWER MOTOR OPERATION

Connect the positive (+) lead from the battery to terminal 1 and the negative (–) lead to terminal 2, check that the motor operation is smooth.

If operation is not as specified, replace the motor.

BLOWER RESISTOR

AC0E8-01

BLOWER RESISTER INSPECTION

INSPECT BLOWER RESISTER CONTINUITY

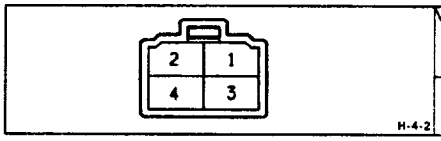

Terminal / Condition	1	3	2	4
Constant	⏀—WW—⏀—WW—⏀—WW—⏀			

V00823

If continuity is not as specified, replace the blower resister.

COMPRESSOR

AC0DN – 01

ON–VEHICLE INSPECTION (Magnetic Clutch)

1. MAKE THE FOLLOWING VISUAL CHECKS

(a) Leakage of grease from the clutch bearing.

(b) Signs of oil on the pressure plate or rotor.

Repair or replace, as necessary.

2. INSPECT MAGNETIC CLUTCH BEARING FOR NOISE

(a) Start engine.

(b) Check for abnormal noise from near the compressor when the A/C switch is OFF.

If abnormal noise is being emitted, replace the mag–netic clutch.

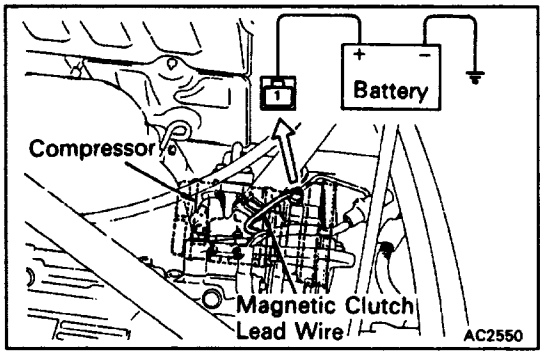

3. INSPECT MAGNETIC CLUTCH

(a) Disconnect the connector from the magnetic clutch.

(b) Connect the positive (+) lead from the battery to the terminal on the magnetic clutch connector and the negative (–) lead to the body ground.

(c) Check that the magnetic clutch is energized.

If operation is not as specified, replace the magnetic clutch.

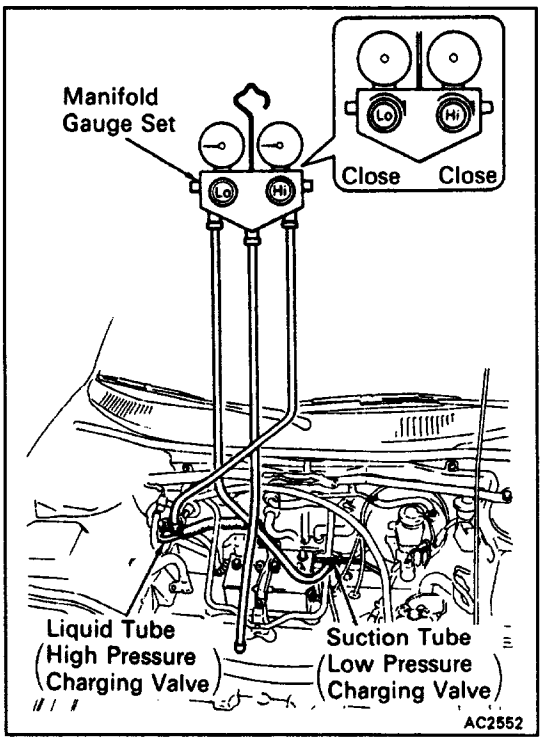

(Compressor)

1. INSTALL MANIFOLD GAUGE SET

(See page AC–16)

2. START ENGINE

3. INSPECT COMPRESSOR FOR METALLIC SOUND

Check that there is a metallic sound from the com–pressor when the A/C switch is turn on.

If metallic sound is heard, replace the compressor assembly.

4. INSPECT PRESSURE OF REFRIGERATION SYSTEM

See ”Refrigerant System Inspection with Manifold Gauge Set” on page AC–18.

5. STOP ENGINE

6. INSPECT VISUALLY FOR LEAKAGE OF REFRIGER–ANT FROM SAFETY SEAL

If there is any leakage, replace the compressor as–sembly.

ACODP–01

COMPRESSOR REMOVAL

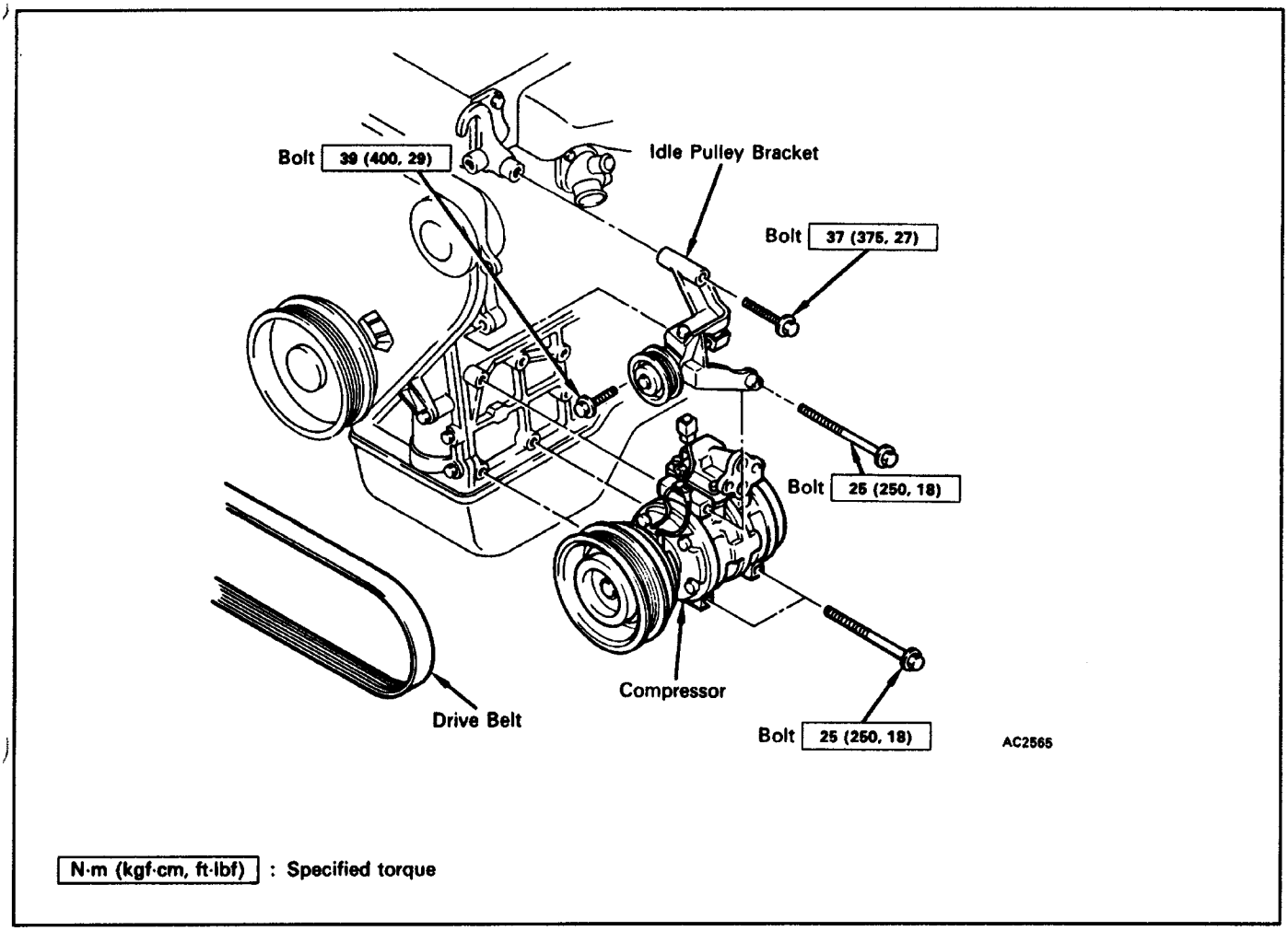

1. RUN ENGINE AT IDLE SPEED WITH A/C ON FOR 10 MINUTES
2. STOP ENGINE
3. DISCONNECT NEGATIVE CABLE TO BATTERY
4. REMOVE UNDER COVER
5. DISCONNECT CONNECTOR FROM MAGNETIC CLUTCH
6. DISCHARGE REFRIGERANT FROM REFRIGERATION SYSTEM

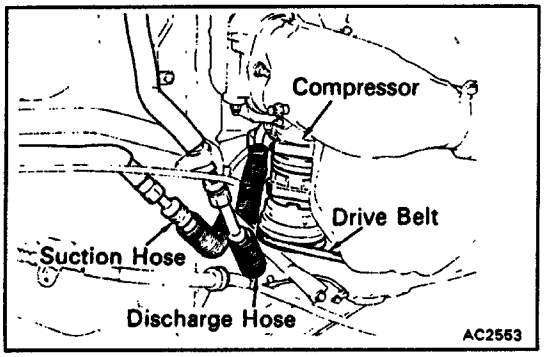

7. DISCONNECT TWO HOSES FROM COMPRESSOR SERVICE VALVES
HINT: Cap the open fitting immediately to keep moisture and dust out of the system.

8. REMOVE COMPRESSOR
(a) Loosen the drive belt.
(b) Remove the idle pulley bracket.
(c) Remove the compressor.

MAGNETIC CLUTCH DISASSEMBLY

AC0DQ–01

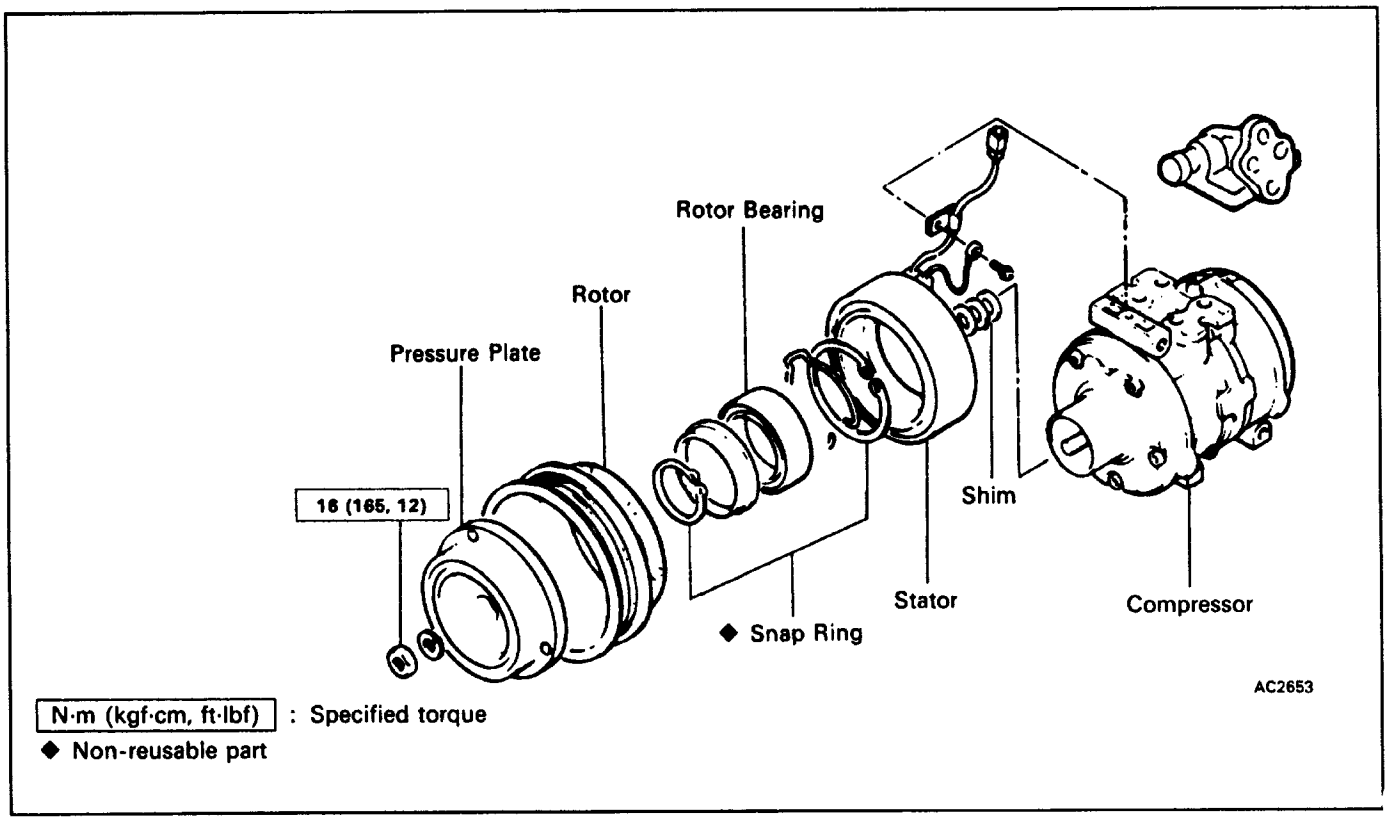

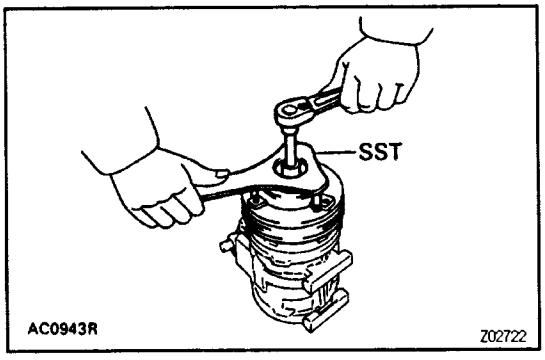

1. REMOVE PRESSURE PLATE

(a) Using SST and a socket, remove the shaft nut.
SST 07112–76040

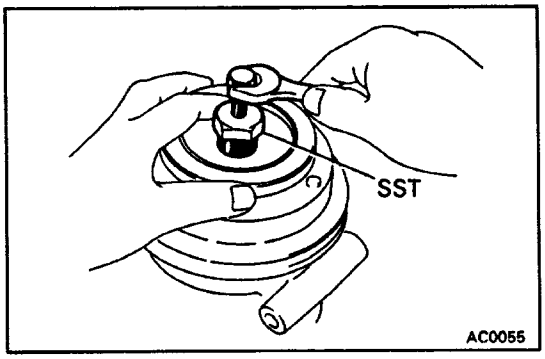

(b) Using SST and a socket, remove the pressure plate.
SST 07112 – 71010

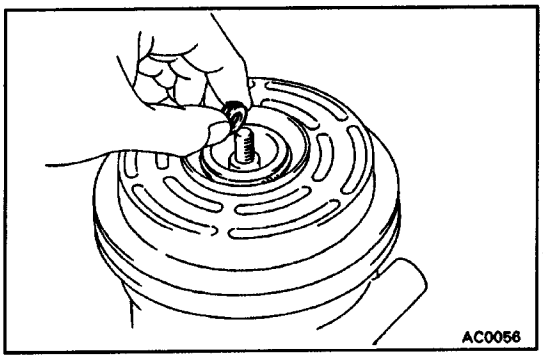

(c) Remove the shims from the shaft.

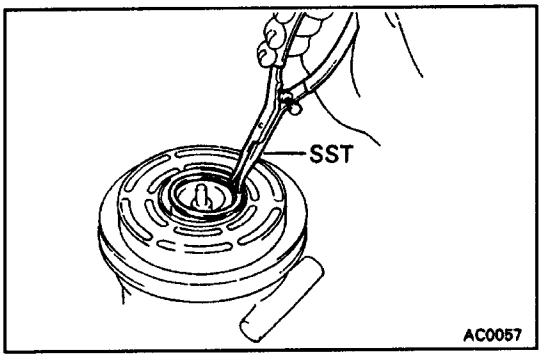

2. REMOVE ROTOR

(a) Using SST, remove the snap ring.
SST 07114–84020

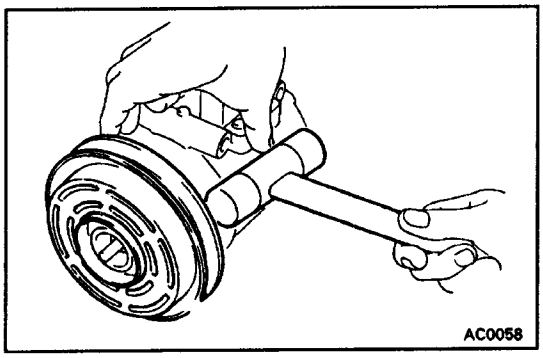

(b) Using plastic hammer, tap the rotor off the shaft.
NOTICE: Be careful not to damage the pulley when tapping on the rotor.

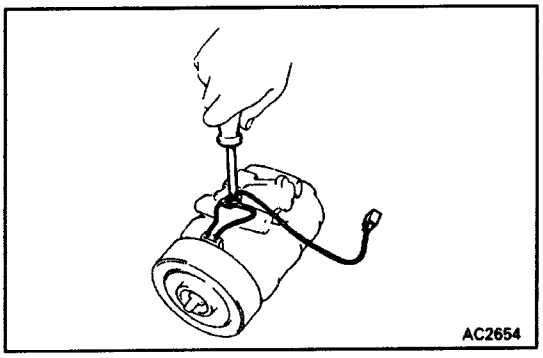

3. REMOVE STATOR

(a) Disconnect the stator lead wires from the compressor housing.

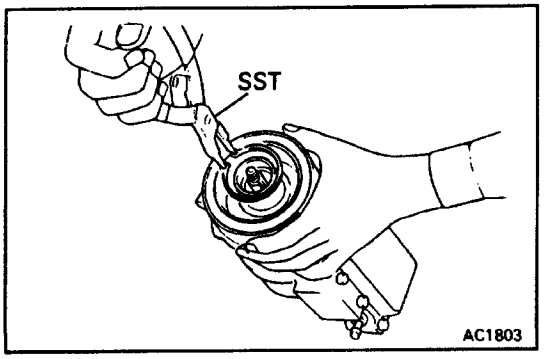

(b) Using SST, remove the snap ring and stator.
SST 07114–84020

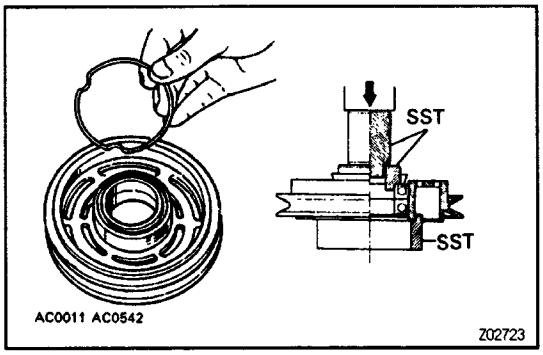

4. REMOVE ROTOR BEARINGS

HINT: Press out the bearings only if they are to be replace.

(a) Remove the bearing snap ring from the rotor.

(b) Using SST, press out the two bearings.
SST 07110–77011

5. INSPECT PRESSURE PLATE AND ROTOR

(a) Inspect the pressure plate and rotor surface for wear and scoring. Replace if necessary.

(b) Check rotor bearings for wear and leakage of grease. Replace if necessary.

COMPRESSOR DISASSEMBLY

AC0DR–01

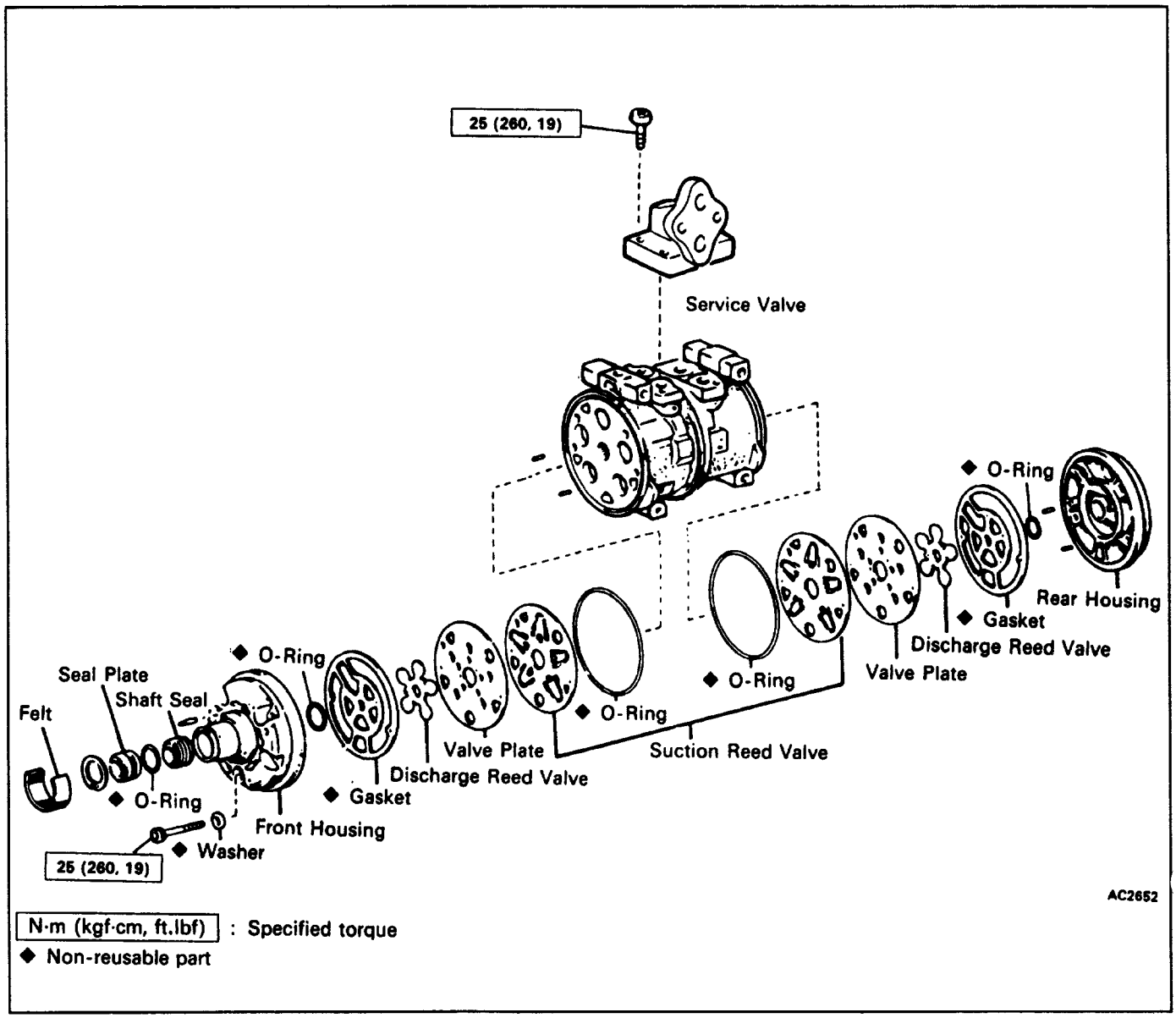

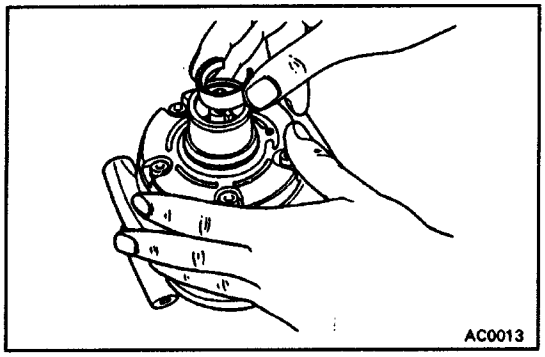

1. REMOVE FELT

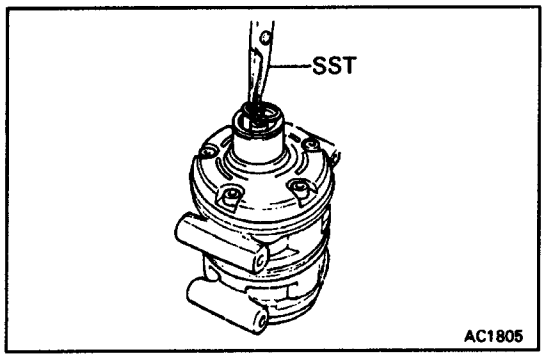

2. REMOVE SNAP RING

Using SST, remove the snap ring.
SST 07114–84020

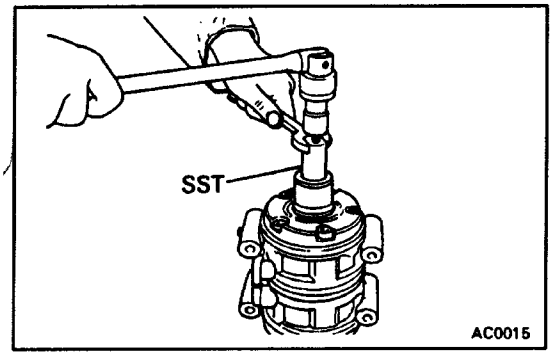

3. REMOVE KEY

Using SST, remove the key from the shaft.
SST 07112–45021

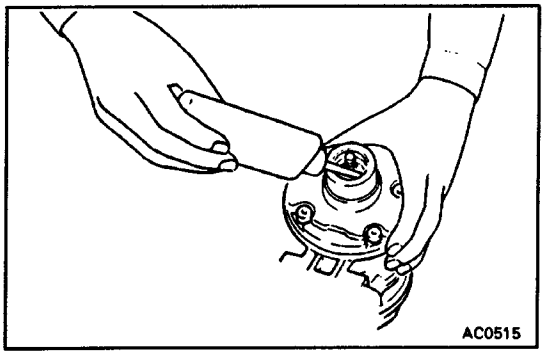

4. APPLY COMPRESSOR OIL TO INNER BORE

Apply compressor oil to the inner bore of the com–pressor.

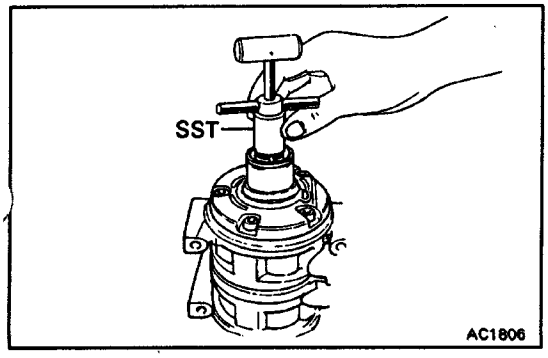

5. REMOVE SEAL PLATE

(a) Insert SST against the shaft. Then push the holder ring downward.
SST 07112 –15010

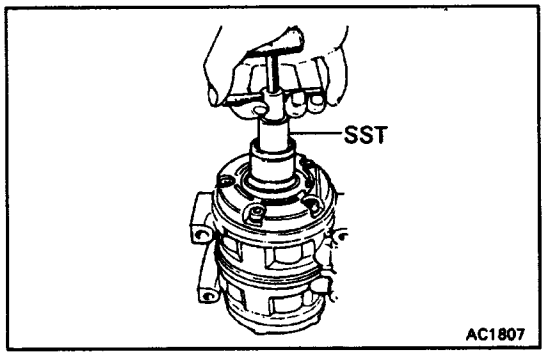

(b) Pull up the remover bar, and remove the seal plate.

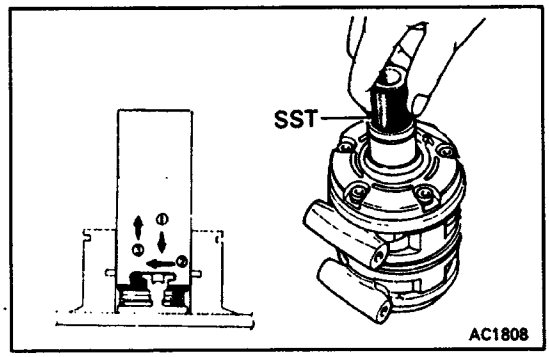

6. REMOVE SHAFT SEAL

Insert SST against the shaft, and turn it to the right while pressing on the remover.
Then remove the shaft seal.
SST 07114 –15010

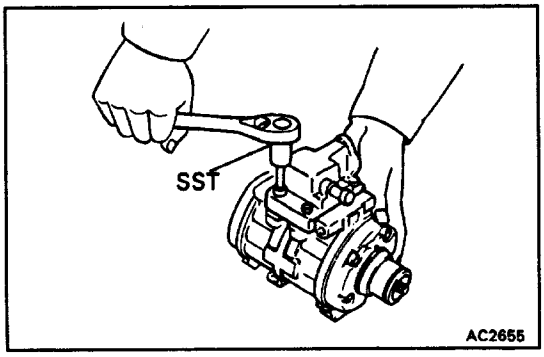

7. REMOVE SERVICE VALVE

(a) Using SST, remove the bolts holding the service valve.
SST 07110–61050

(b) Remove the O–ring from the service valve and discard them.

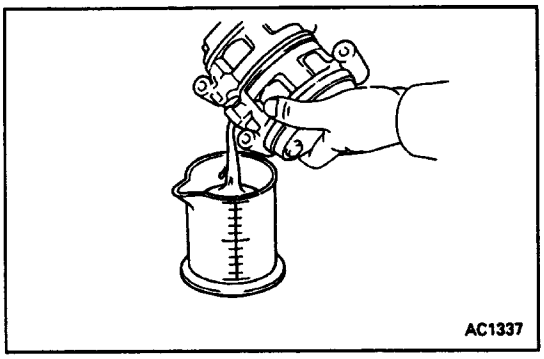

8. DRAIN COMPRESSOR OIL INTO MEASURING FLASK

Measure the quantity of drained oil because the same amount should be replaced later.

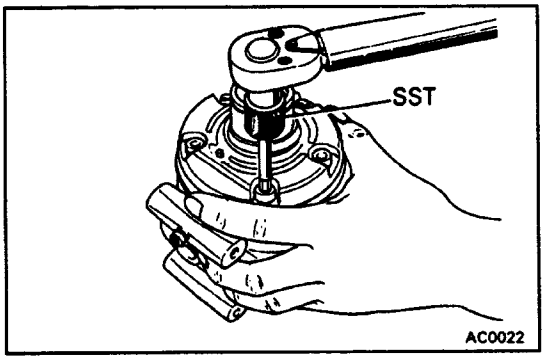

9. REMOVE FRONT HOUSING

(a) Using SST, remove the five through bolts.
HINT: Do not reuse the five washers.
SST 07110–61050

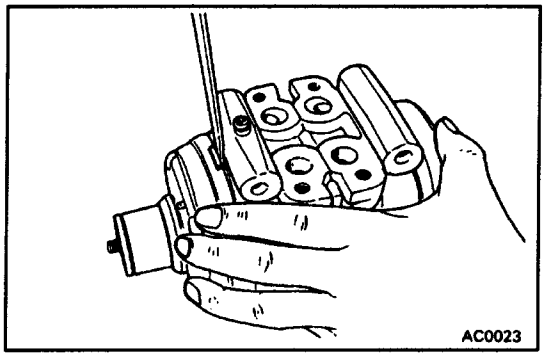

(b) Using a screwdriver, remove the front housing.

NOTICE: Be careful not to scratch the sealing surface of the front housing.

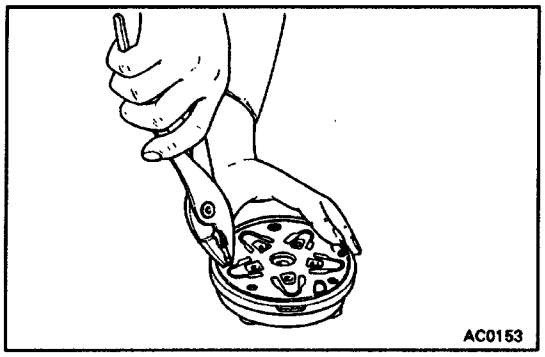

10. REMOVE FRONT VALVE PLATE

Remove the two pins from the front housing. Discard the pins.

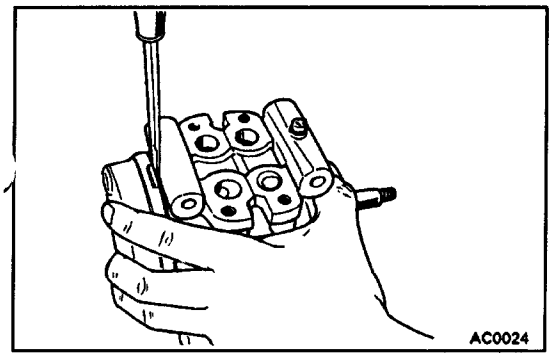

11. REMOVE REAR HOUSING

Using screwdriver, remove the rear housing.

NOTICE: Be careful not to scratch the sealing surface of the rear housing.

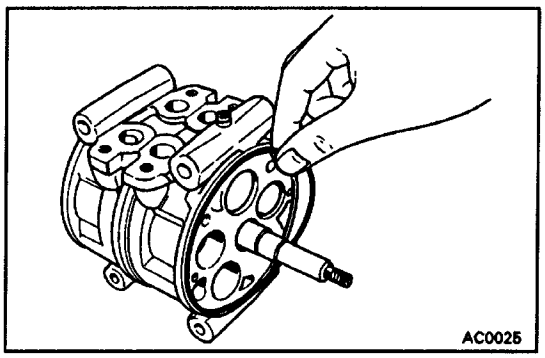

12. REMOVE FRONT AND REAR O – RINGS FROM CYLINDER BLOCK

Discard the 0–rings.

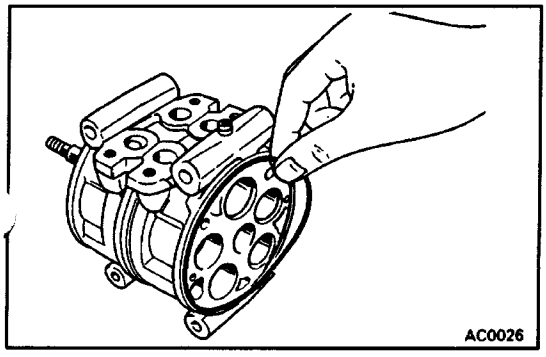

AC0D8–01

COMPRESSOR ASSEMBLY

1. INSTALL REAR VALVE PLATE ON REAR CYLINDER

(a) Install two pins in the rear cylinder.

(b) Lubricate a new 0–ring with compressor oil. Install the O–ring in the rear cylinder.

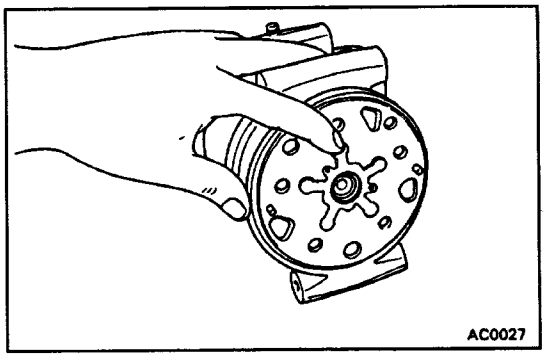

(c) Install the rear suction valve over the pins on the rear cylinder.
HINT: The front and rear suction valves are identical.

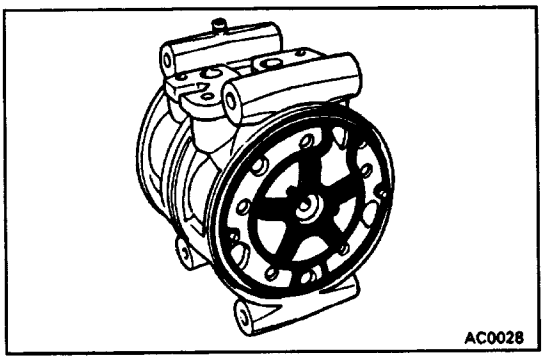

(d) Install the rear valve plate together with the discharge over the pins on the rear cylinder.
HINT: The rear valve plate is marked with an ”R”.
(e) Lubricate the new gasket with compressor oil. Install the gasket on the valve plate.

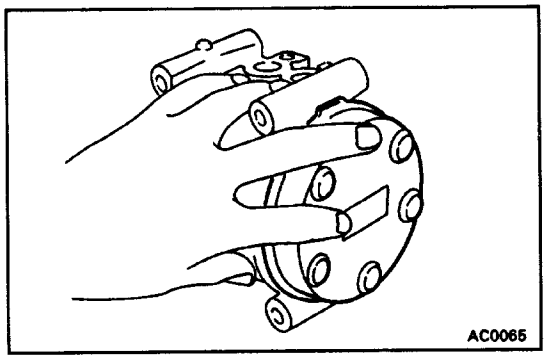

2. INSTALL REAR HOUSING ON REAR CYLINDER

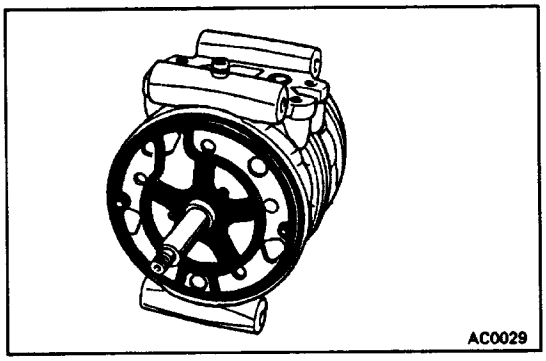

3. INSTALL FRONT VALVE PLATE ON FRONT CYLINDER

(a) Install the two pins in the front cylinder.
(b) Lubricate a new 0–ring with compressor oil. Instal the O–ring in the front housing.
(c) Install the front suction valve over the pins on the front cylinder.
(d) Install the front valve plate together with the dis charge valve over the pins on the front cylinder.
HINT: The front valve plate is marked with an ”F”.
(e) Lubricate the new gasket with compressor oil. Instal the gasket on the valve plate.

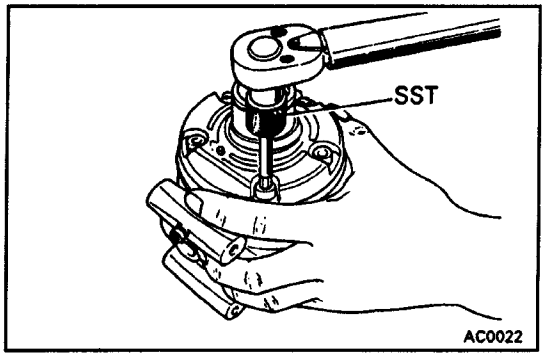

4. INSTALL FRONT HOUSING ON FRONT CYLINDER AND TIGHTEN FIVE THROUGH BOLTS

Using SST and torque wrench, gradually tighten the five through bolts in two or three passes.

SST 07110–61050

Torque: 25 N–m (260 kgf–cm, 19 ft–lbf)

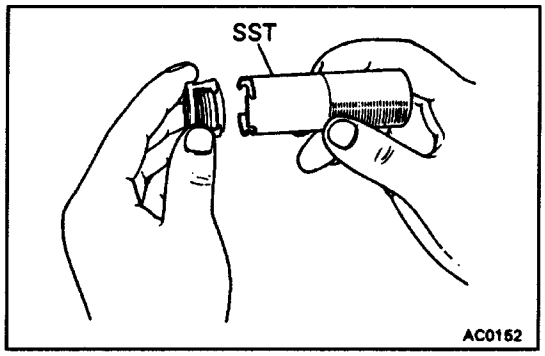

5. INSTALL SHAFT SEAL

(a) Fit the shaft seal onto SST.

SST 07114–15010

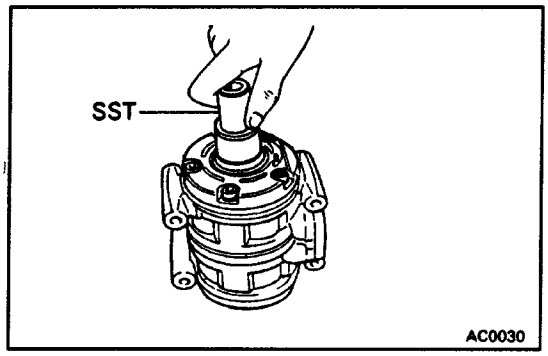

(b) Apply oil to the bore.

(c) Insert SST, and turn it counterclockwise while lightly pressing in.

(d) Then pull up the SST.

SST 07114–15010

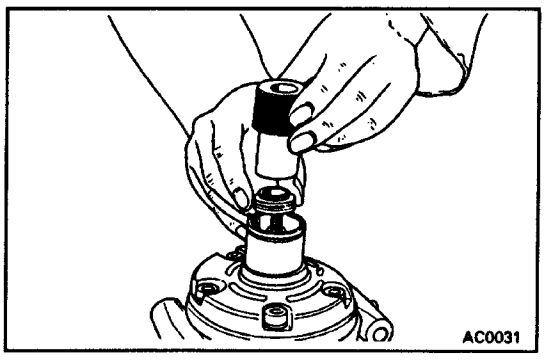

6. INSTALL SEAL PLATE

(a) Put in the seal plate.

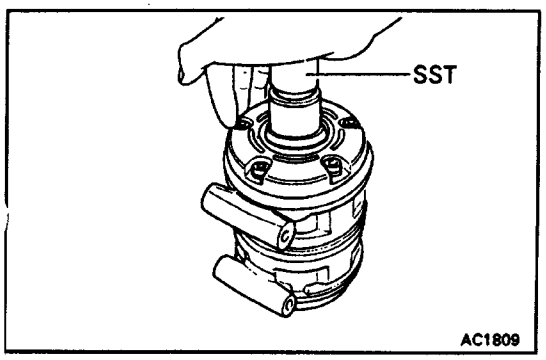

(b) Press in SST.

SST 07112–25010

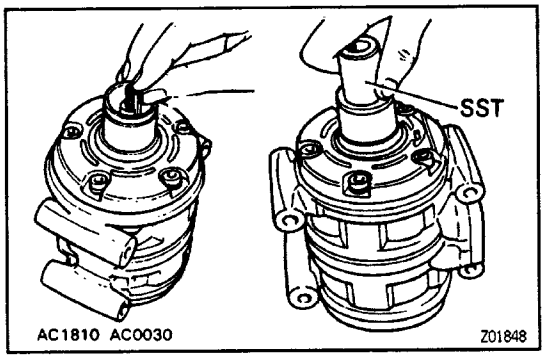

7. INSTALL KEY IN SHAFT GROOVE

Using SST and plastic hammer, tap the key lightly.
SST 07114 – 45010
Place the felt inside the bore.
(Refer to page AC–32)

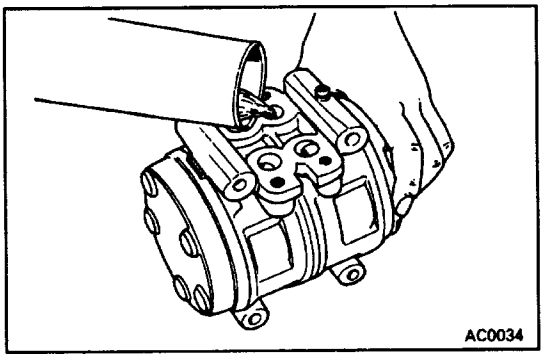

8. POUR COMPRESSOR OIL INTO COMPRESSOR

Add the same quantity of oil as was removed, plus 20 cc, into the compressor.
Compressor oil: .
ND OIL6, SUNISO No.5GS or equivalent

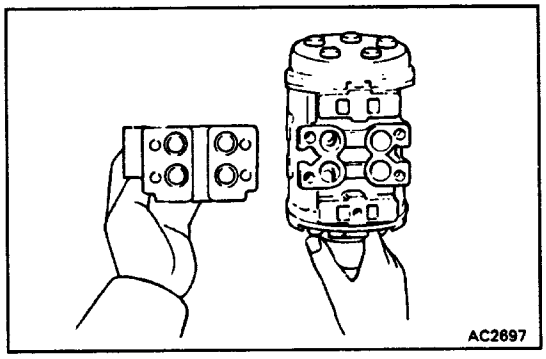

9. INSTALL SERVICE VALVE

(a) Lubricate new 0–rings with compressor oil. Install the O–rings in the service valve.
(b) Install the service valve on the compressor. Using SST and torque wrench, tighten the bolts.
SST 07110–61050
Torque: 25 N–m (260 kgf–cm, 19 ft–lbf)

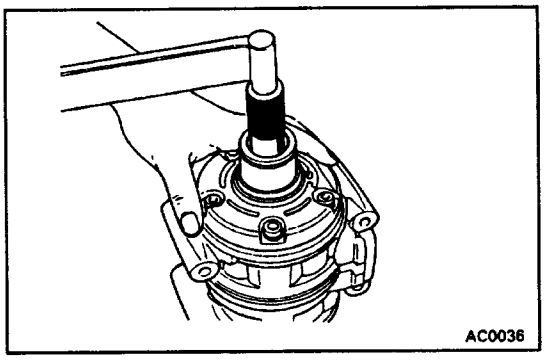

10. CHECK SHAFT STARTING TORQUE

Torque: 4.9 N–m (50 k9f–cm, 43 in.–lbf)

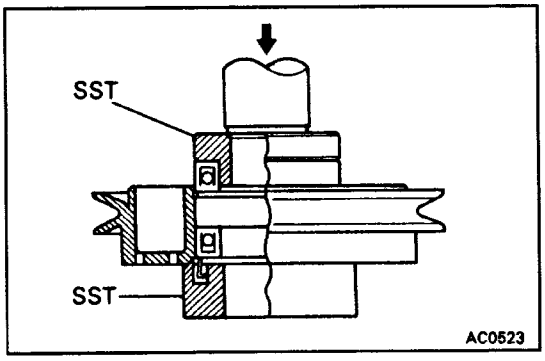

AC0DT – 01

MAGNETIC CLUTCH ASSEMBLY

1. INSTALL TWO BEARINGS IN ROTOR

(a) Using SST, press a shield ring and two new bearing; into the rotor boss until fully seated.
SST 07110–77011
(b) Install the bearing snap ring into the rotor groove.

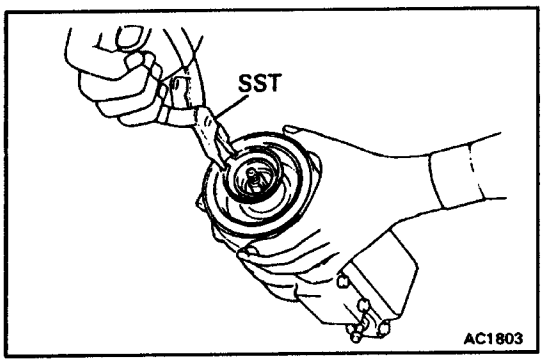

2. INSTALL STATOR

(a) Install the stator on the compressor.
(b) Using SST, install the new snap ring.
SST 07114–84020
(c) Connect the stator lead wires to the compressor housing.

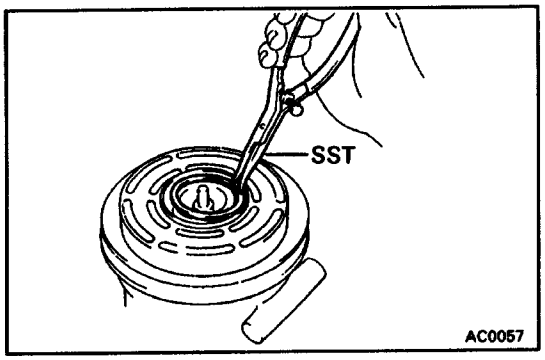

3. INSTALL ROTOR

(a) Install the rotor on the compressor shaft.
(b) Using SST, install the new snap ring.
SST 07114–84020

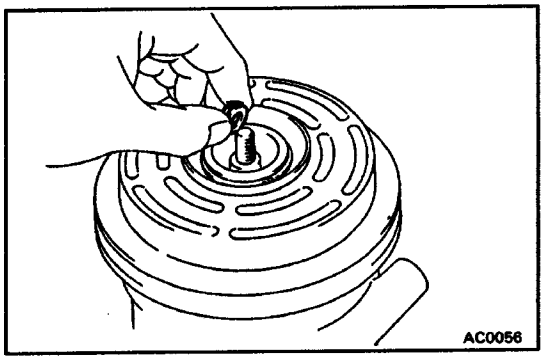

4. INSTALL PRESSURE PLATE

(a) Adjust the clearance between the pressure plate and rotor by installing shims on the compressor shaft.
Standard clearance:
0.8±0.2mm (0.32±0.08in.)
If the clearance is not within tolerance, change the number of shims to obtain the standard clearance.

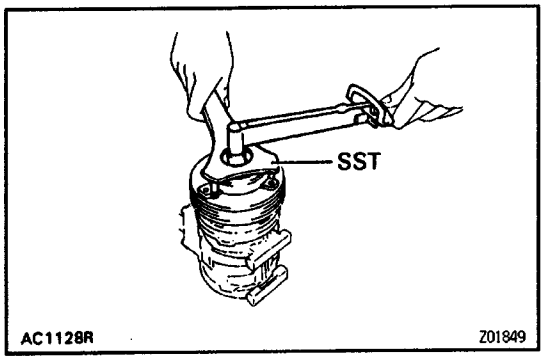

(b) Using SST and torque wrench, install the shaft nut.
SST 07112–76040
Torque: 20 N–m (200 kgf–cm, 14 ft–lbf)

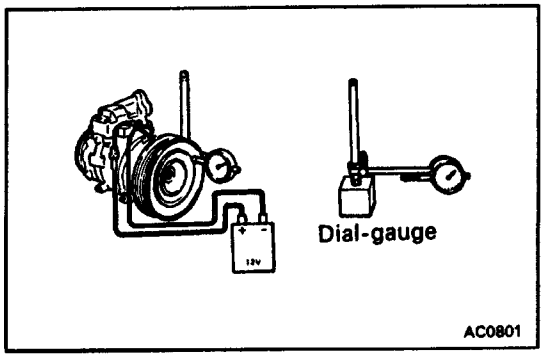

5. INSPECT CLEARANCE OF MAGNETIC CLUTCH

(a) Set the dial indicator to the pressure plate of the magnetic clutch.
(b) Connect the magnetic clutch lead wire to the positive (+) terminal of the battery.
(c) Check the clearance between the pressure plate and rotor, when connect the negative (–) terminal of the battery.

Standard clearance:

0.8 ± 0.2 mm (0.32 ± 0.08 in.)

If the clearance is not within standard clearance, adjust the clearance using shims to obtain the sta–ndard clearance.

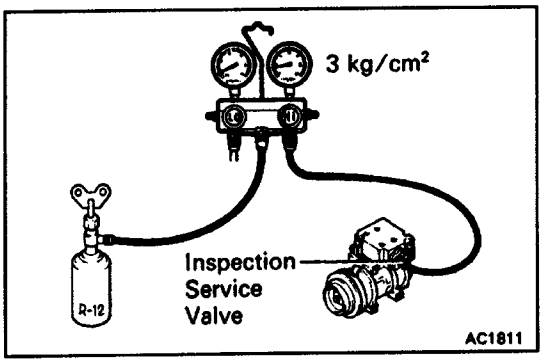

COMPRESSOR PERFORMANCE TEST

ACODU–01

1. PERFORM GAS LEAKAGE TEST

(a) Install the inspection service valve on the service valve.

HINT: Use only a TOYOTA supplied inspection service valve to perform the gas leakage test.

Part No.

Suction side 88376–17020

Discharge side 88376–22020

(b) Charge the compressor with refrigerant through the charge valve unit the pressure is 294 kPa (3 kgf/cm^2, 43 psi).

(c) Using a gas leak detector, check the compressor for leaks.

If leaks are found, check and replace the compressor.

2. EVACUATE COMPRESSOR AND CHARGE WITH REFRIGERANT

Make sure the caps are tight and compressor is free from moisture and contamination.

HINT: When storing a compressor for an extended period, charge the compressor with refrigerant or dry nitrogen gas to prevent corrosion.

AC0DV–01

COMPRESSOR INSTALLATION

1. INSTALL COMPRESSOR AND IDLE PULLEY BRACKET WITH FIVE BOLTS
   Torque:
   12 mm bolt 25 N–m (250 kgf–cm, 18 ft–lbf)
   14 mm bolt 37 N–m (375 kgf–cm, 27 ft–lbf)

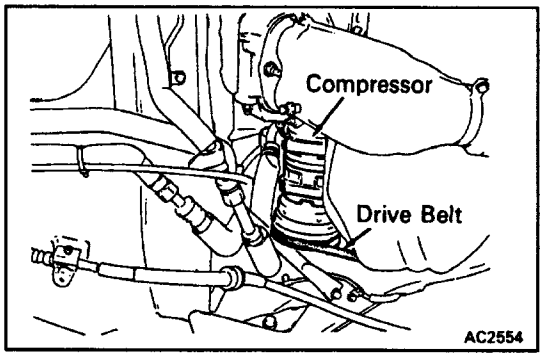

2. INSTALL DRIVE BELT
3. CONNECT TWO HOSES TO COMPRESSOR
   Torque:
   Discharge line 25 N–m (250 kgf–cm, 18 ft–lbf)
   Suction line 25 N–m (250 kgf–cm, 18 ft–lbf)
4. CONNECT CLUTCH LEAD WIRE TO WIRE HARNESS
5. CONNECT CABLES TO BATTERY
6. EVACUATE AIR FROM AIR CONDITIONING SYSTEM
7. CHARGE AIR CONDITIONING SYSTEM WITH REFRIGERANT AND CHECK FOR GAS LEAKAGE
   Specified amount:
   850 ± 50 g (29.98 ± 1.76 oz.)

CONDENSER

AC004–01

ON–VEHICLE INSPECTION

1. INSPECT CONDENSER FINS FOR BLOCKAGE OR DAMAGE

If the fins are clogged, wash them with water and dry with compressed air.

NOTICE: Be careful not to damage the fins.

If the fins are bent, straighten them with a screwdriver or pliers.

2. INSPECT CONDENSER FITTINGS FOR LEAKAGE

Repair as necessary.

AC00Y–01

CONDENSER REMOVAL

1. DISCHARGE REFRIGERANT FROM REFRIGERATION SYSTEM

2. REMOVE COVER AND TWO BRACKETS WITH FOUR BOLTS

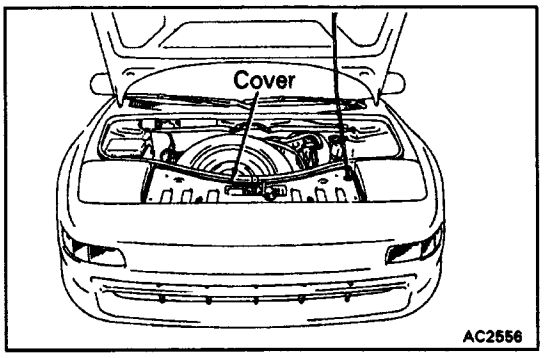

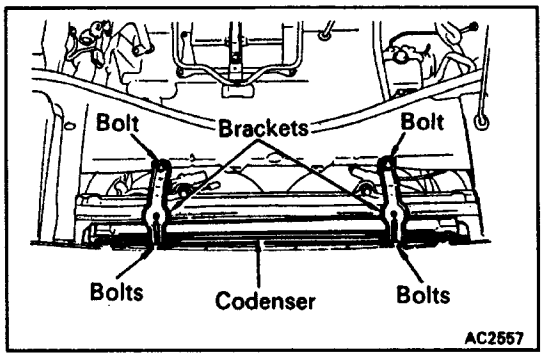

3. DISCONNECT LIQUID TUBE AND DISCHARGE TUBE FROM CONDENSER FITTINGS

HINT: Cap the open fittings immediately to keep moisture out of the system.

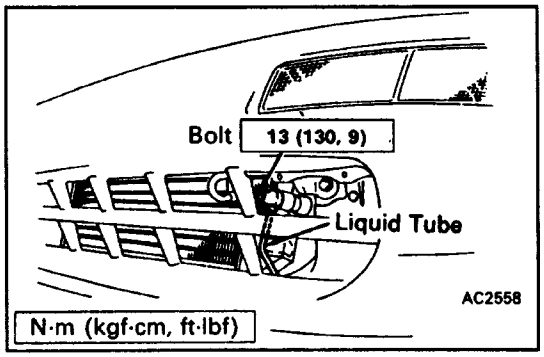

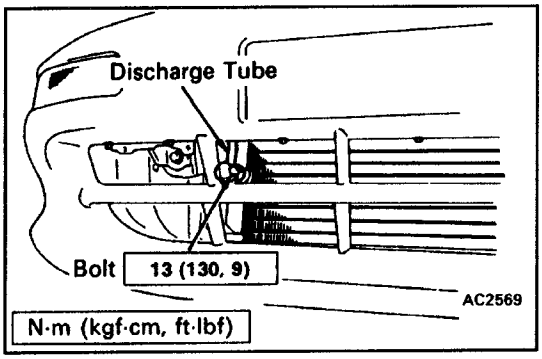

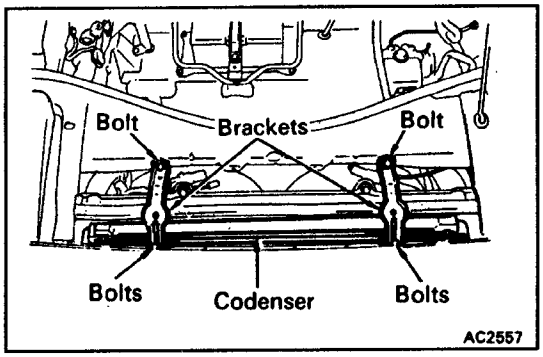

4. REMOVE CONDENSER

(a) Remove the two bolts.

(b) Pull out the condenser between radiator and the body.

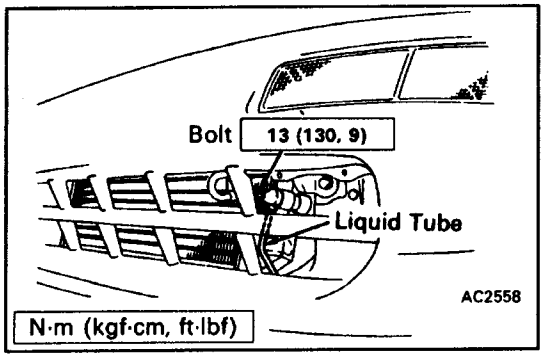

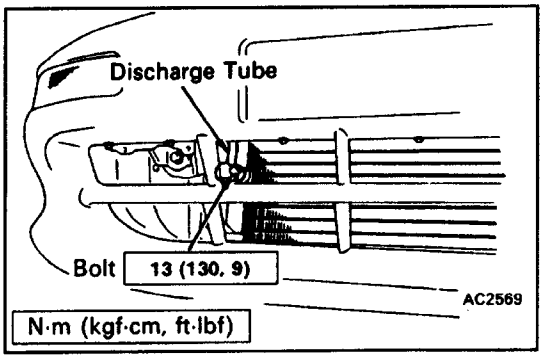

AC0DZ–01

CONDENSER INSTALLATION

1. INSTALL CONDENSER

Install the brackets and bolts, making sure the rubber cushions fit on the mounting flanges correctly.

2. CONNECT LIQUID TUBE AND DISCHARGE TUBE TO CONDENSER

Torque: 13 N–m (130 kgf–cm, 9 ft–lbf)

3. REINSTALL TWO BRACKETS WITH FOUR BOLTS AND COVER

4. IF CONDENSER WAS REPLACED, ADD COMPRES–SOR OIL TO COMPRESSOR

Add 40–50 cc (1.4–1.8 fl.oz.)

Compressor oil:

ND OIL6, SUNISO NO.5 GS or equivalent

5. EVACUATE AIR FROM AIR CONDITIONING SYSTEM

6. CHARGE SYSTEM WITH REFRIGERANT AND IN–SPECT FOR LEAKAGE OF REFRIGERANT

Specified amount:

850 ±50 g (29.98 ±1.76 oz.)

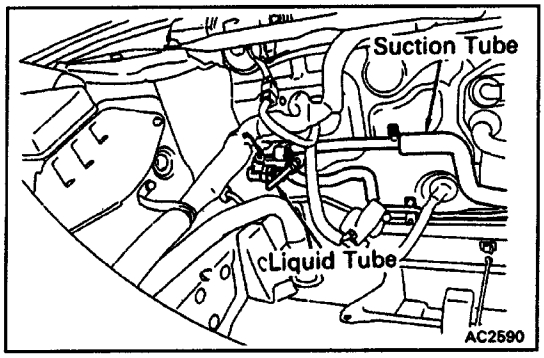

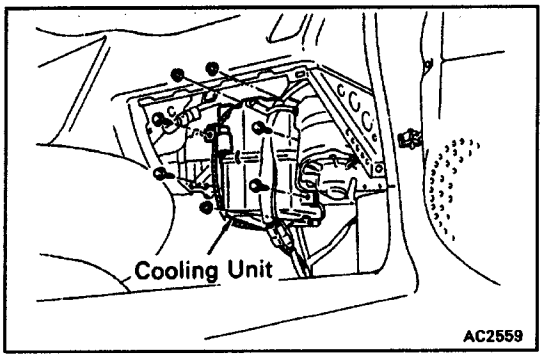

COOLING UNIT

AC0DJ–01

COOLING UNIT REMOVAL

1. DISCONNECT NEGATIVE CABLE FROM BATTERY

2. DISCHARGE REFRIGERANT FROM REFRIGERATION SYSTEM

3. DISCONNECT SUCTION TUBE FROM COOLING UNIT OUTLETFITTING

4. DISCONNECT LIQUID TUBE FROM COOLING UNIT OUTLET FITTING

HINT: Cap the open fittings immediately to keep moisture out of the system.

5. REMOVE GLOVE BOX

6. DISCONNECT CONNECTORS

7. REMOVE COOLING UNIT

Remove the three nuts and four bolts and the cooling unit.

AC0DK–01

COOLING UNIT DISASSEMBLY

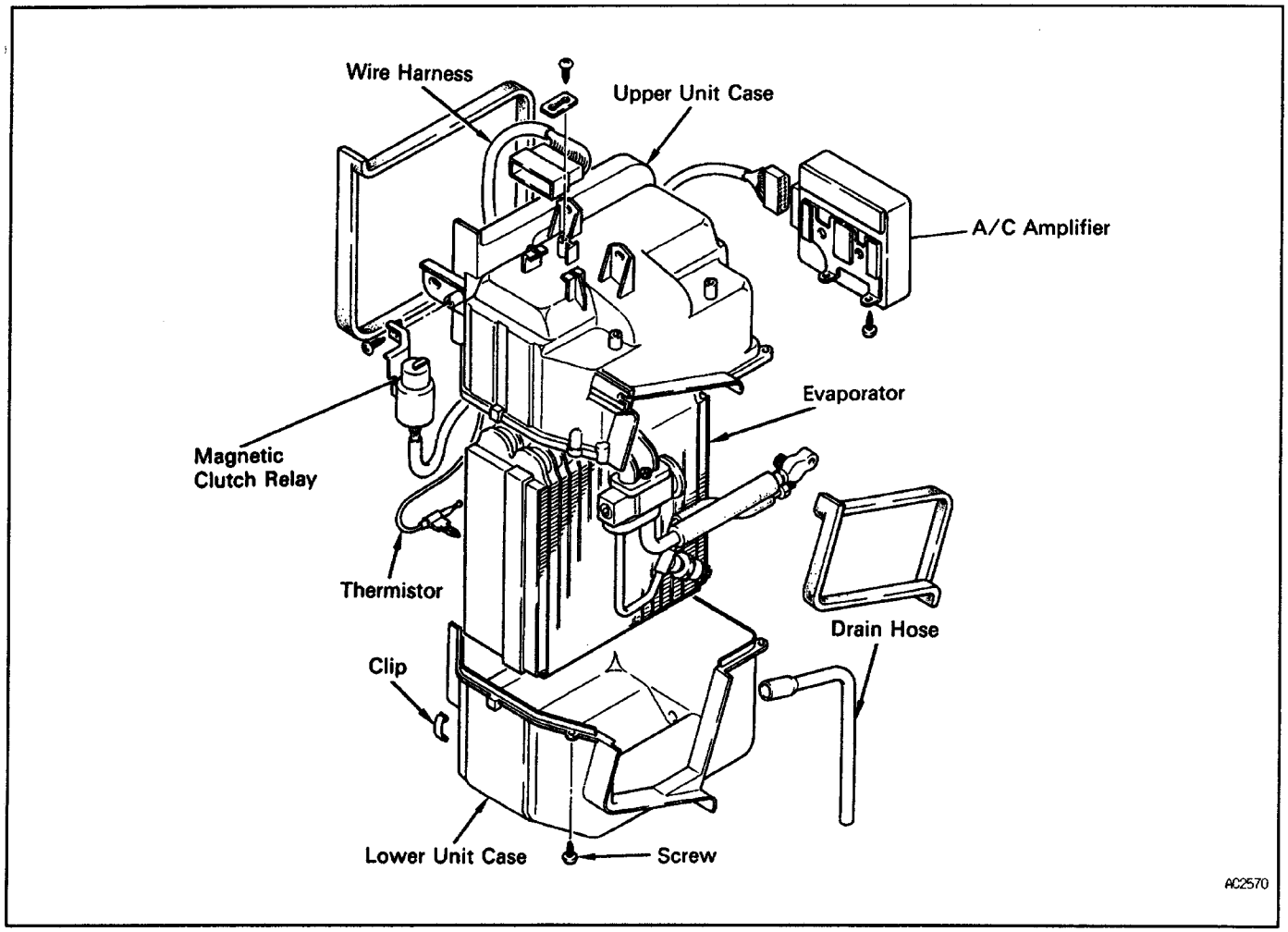

1. REMOVE MAGNETIC CLUTCH RELAY

2. REMOVE A/C AMPLIFIER

3. REMOVE UPPER UNIT CASE

(a) Disconnect the connectors.

(b) Remove the wire harness.

(c) Remove the two clips.

(d) Remove the four screws.

(e) Remove the upper unit case.

4. REMOVE EVAPORATOR FROM LOWER UNIT CASE

5. REMOVE THERMISTOR FROM EVAPORATOR

Remove the thermistor with the thermistor holder.

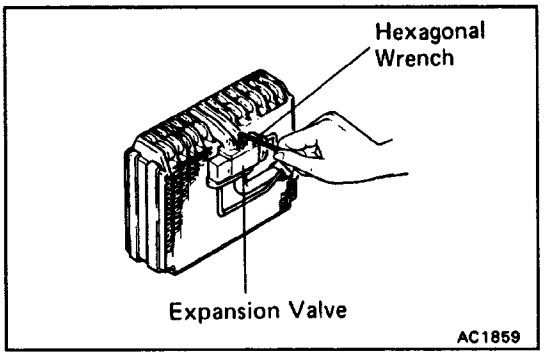

6. REMOVE EXPANSION VALVE FROM EVAPORATOR

(a) Remove the packing and heat sensing tube from suction and liquid tubes.

(b) Remove the expansion valve from the evaporator.

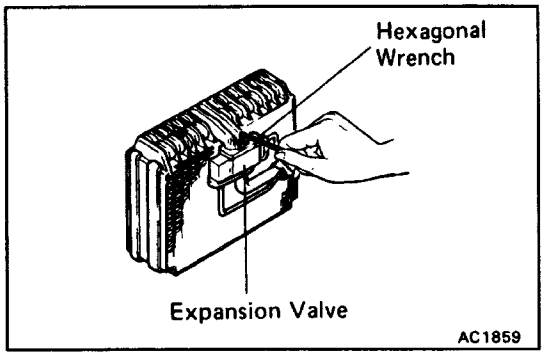

ACODL–01

COOLING UNIT ASSEMBLY

INSTALL COMPONENTS ON EVAPORATOR

(a) Connect the expansion valve, suction and liquid tubes to the evaporator. Torque the bolt.

Torque: 5.4 N–m (55 kgf–cm, 48 in.–lbf)

HINT: Be sure that the 0–rings are positioned on the tube fitting.

(b) Install the holder to the suction and liquid tubes with heat sensing tube.

(c) Install the lower unit case to the evaporator.

(d) Install the thermistor to the evaporator.

(e) Install the upper unit case.

(f) Install the four screws.

(g) Install three clips.

(h) Install the connector of thermistor.

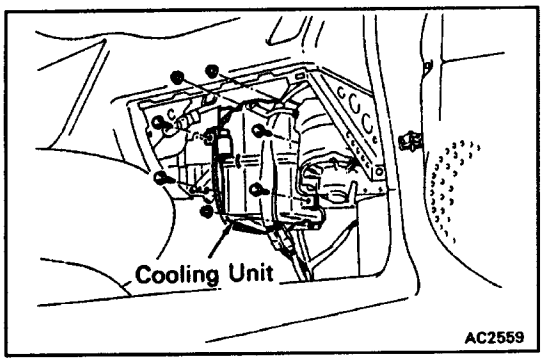

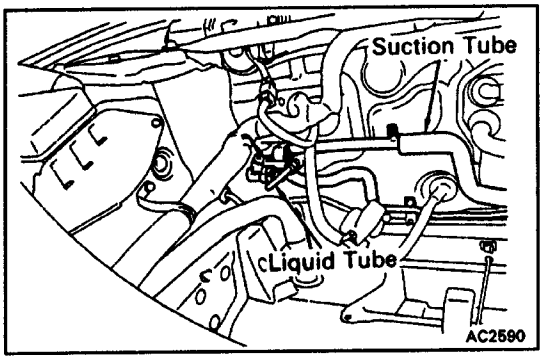

AC0DM–01

COOLING UNIT INSTALLATION

1. INSTALL COOLING UNIT

Install the cooling unit with the three nuts and four bolts.

2. CONNECT CONNECTORS

3. INSTALL GLOVE BOX REINFORCEMENT

4. CONNECT LIQUID TUBE TO COOLING UNIT INLET FITTING

Toque the nut.

Torque: 14 N–m (140 kgf–cm, 10 ft–lbf)

5. CONNECT SUCTION TUBE TO COOLING UNIT OUTLET FITTING

Torque the nut.

Torque: 32 N–m (330 kgf–cm, 24 ft–lbf)

6. IF EVAPORATOR WAS REPLACED, ADD COMPRESSOR OIL TO COMPRESSOR

Add 40–50 cc (1.4–1.7 fl.oz.)

Compressor oil:

ND OIL 6, SUNISO N0.5 GS or equivalent

7. CONNECT NEGATIVE CABLE TO BATTERY

8. EVACUATE AIR FROM REFRIGERATION SYSTEM

9. CHARGE SYSTEM WITH REFRIGERANT AND INSPECT FOR LEAKAGE OF REFRIGERANT

Specified amount:

850±50 g (29.98 ±1.76 oz.)

DESCRIPTION

AC06Q-02

PARTS LOCATION

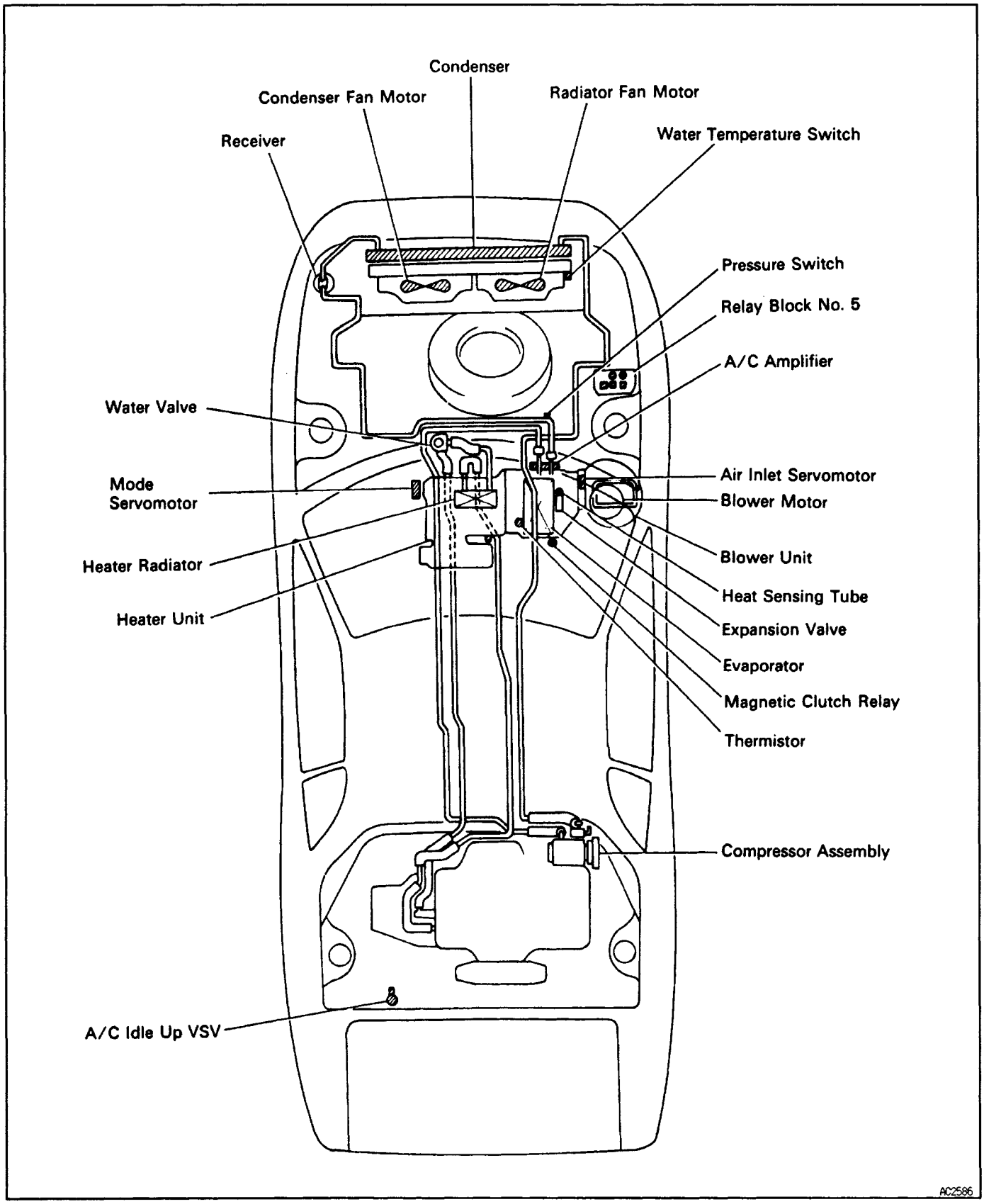

AC0DD–01

ELECTRICAL WIRING DIAGRAM

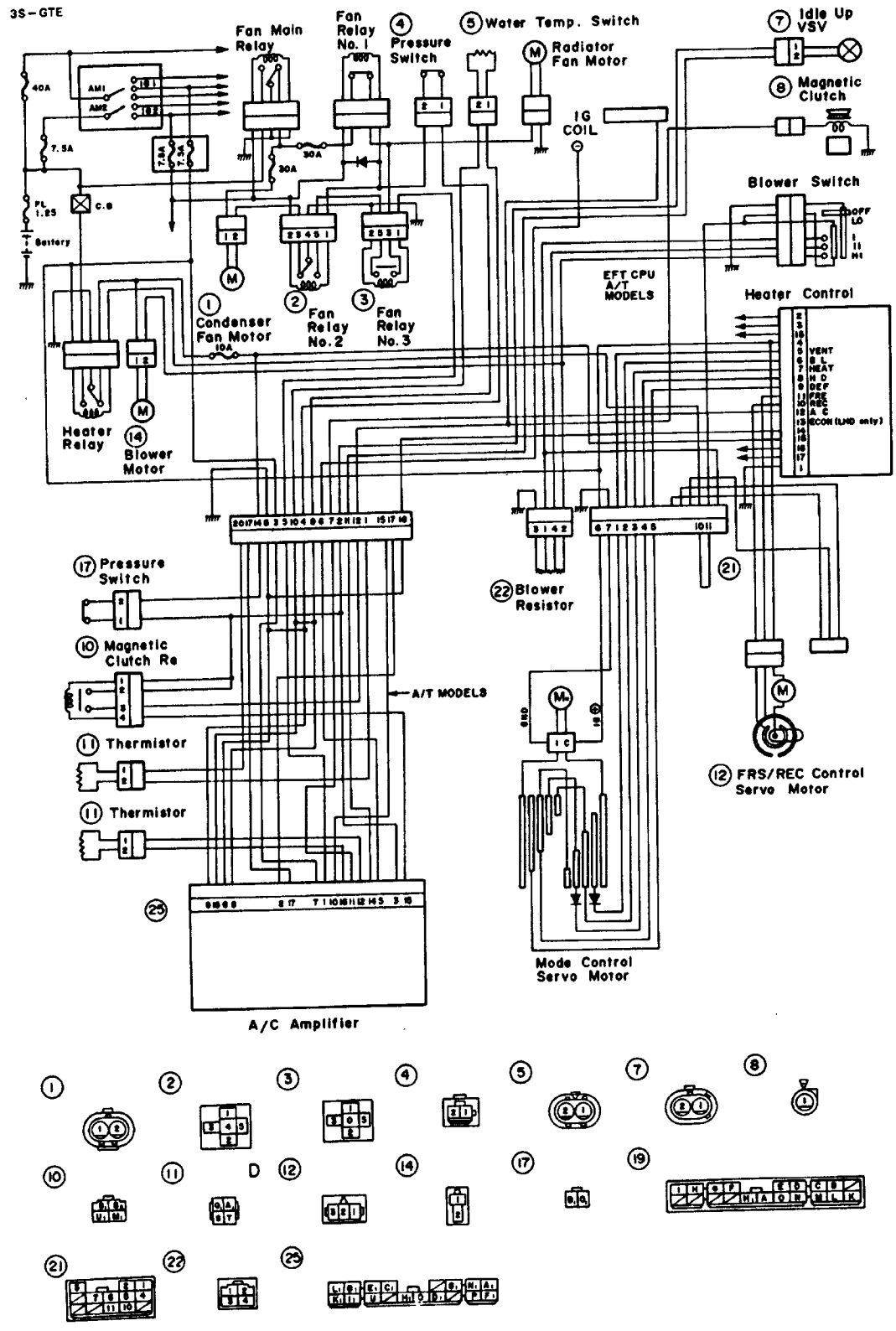

N04589

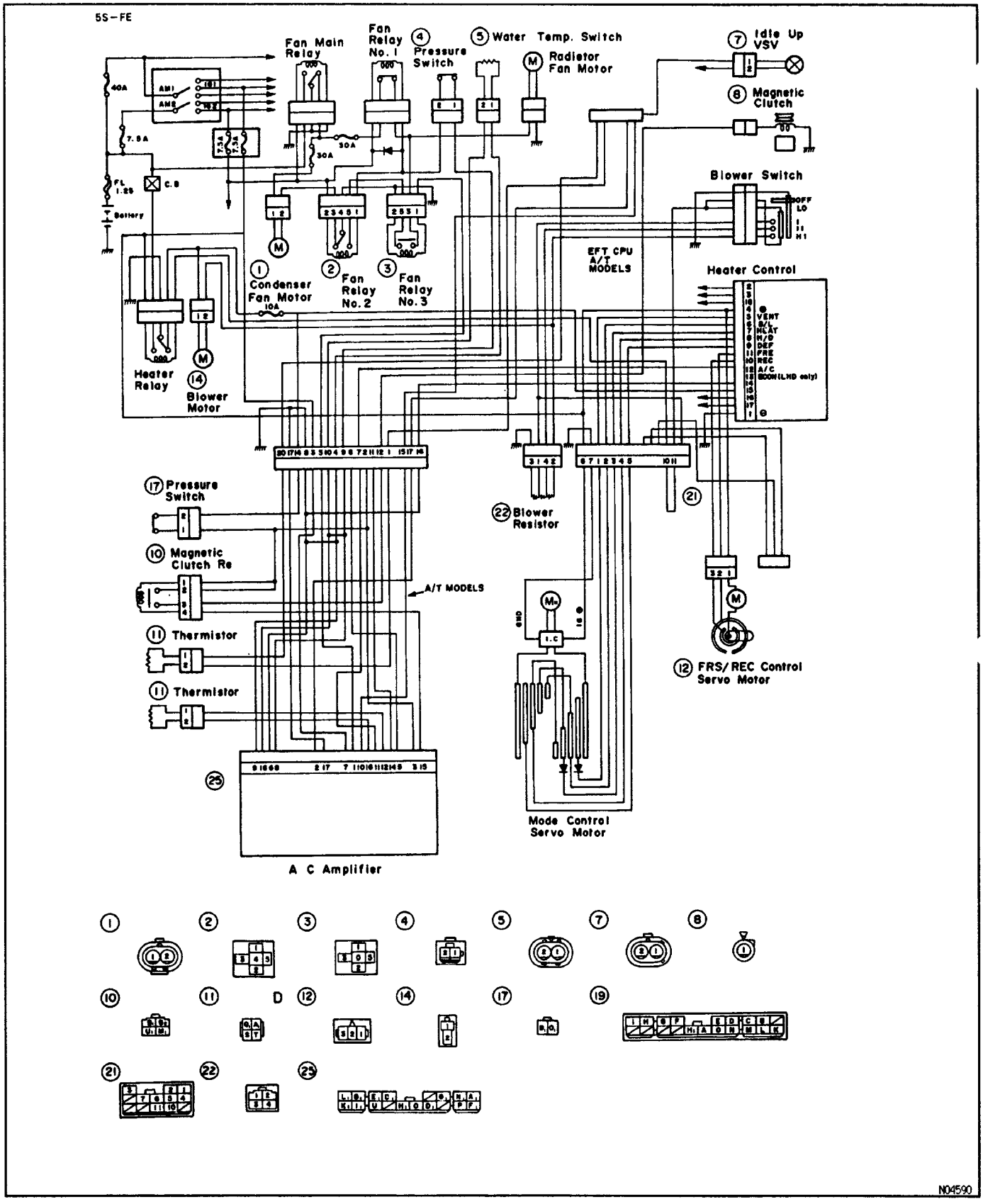
5S–FE
Fan Main Relay
Fan Relay No. 1
4 Pressure Switch
5 Water Temp. Switch
M Radiator Fan Motor
7 Idle Up VSV
8 Magnetic Clutch
Blower Switch
OFF
LO
HI
EFT CPU A/T MODELS
Heater Control
VENT
B/L
INCAT
H/D
DEF
FRE
REC
A/C
(DOOR(LHD only)
1 Condenser Fan Motor
2 Fan Relay No. 2
3 Fan Relay No. 3
Heater Relay
14 Blower Motor
17 Pressure Switch
10 Magnetic Clutch Re
A/T MODELS
11 Thermistor
11 Thermistor
22 Blower Resistor
21
12 FRS/REC Control Servo Motor
Mode Control Servo Motor
25
A C Amplifier
D

N04590

AC0DE–01

DAMPERS POSITION

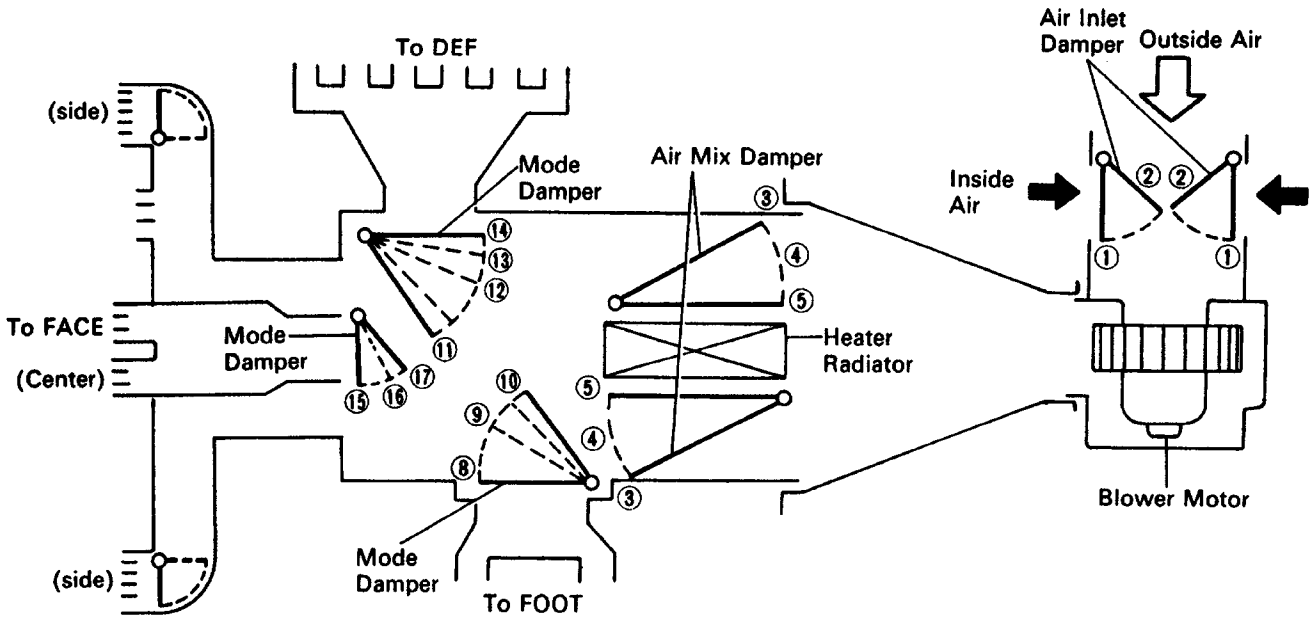

A/C control switch	A/C control lever position	Dampers position	Air flow vents			
			FACE		FOOT	DEF
			Center	Side		
Air Inlet Control Lever	Fresh	①				
	Recirc	②				
Temperature Control Lever	Warm ⇕ Cool	③ ⇕ ④ ⇕ ⑤				
Mode Control Lever	Def.	⑧ ⑪ ⑮		○		◎
	Foot/Def.	⑨ ⑫ ⑮		○	○	○
	Foot	⑩ ⑬ ⑮		○	◎	○
	Bi-Level	⑨ ⑭ ⑯	○	○	○	
	Face	⑧ ⑭ ⑰	◎	◎		

The size of circle (○) indicates the proportion of the air flow volume.

AC2588
001BE

Z01844

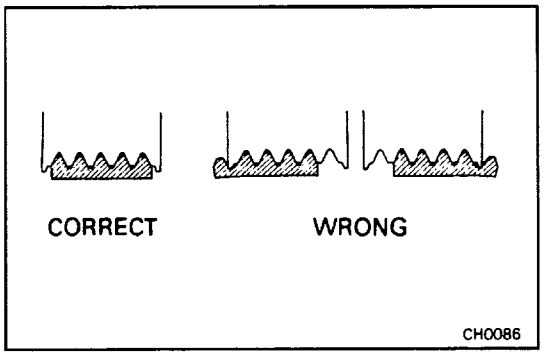

DRIVE BELT TENSION

DRIVE BELT TENSION INSPECTION

1. INSPECT DRIVE BELT'S INSTALLATION CONDITION

Check that the drive belt fits properly in the ribbed grooves.

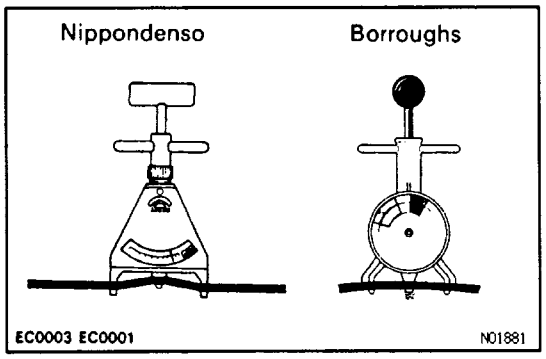

2. INSPECT DRIVE BELT TENSION

(Reference)

Using SST, check the drive belt tension.

SST 09216–00020 and 09216–00030

Drive belt tension:

New belt 160 ± 25 lb

Used belt 100 ± 20 lb

HINT:

- "New belt" refers to a belt which has been used less than 5 minutes on a running engine.
- "Used belt" refers to a belt which has been used on a running engine for 5 minutes or more.
- After installing the drive belt, check that if fits properly in the ribbed grooves. .

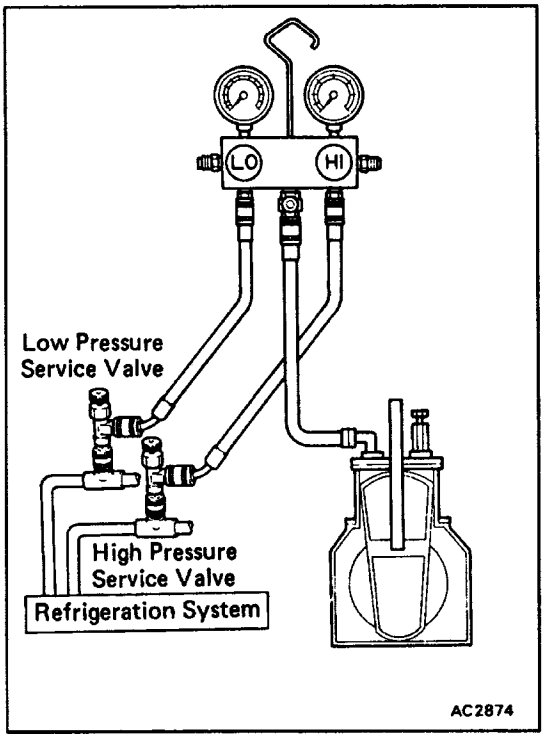

EVACUATING AIR IN REFRIGERATION SYSTEM AND CHARGING WITH REFRIGERANT

AC010-0t

HINT: Before charging the system with refrigerant, be sure carry out a complete evacuation of the system.

1. INSTALL MANIFOLD GAUGE SET TO SERVICE VALVES

(See page AC–2**)**

2. EVACUATE AIR IN REFRIGERATION SYSTEM

(a) Connect the center hose of the manifold gauge set to the vacuum pump.

(b) Open both the high and low hand valves and run the vacuum pump.

HINT: If opening the low pressure hand valve pulls the high pressure gauge into the vacuum range, there is no blockage in the system.

(c) After ten minutes or more, check that the low pres–sure gauge indicates 99.99 kPa (750 mmHg, 29.53 in. Hg) or more of vacuum.

HINT: If the reading is not 99.99 kPa (750 mmHg, 29.53 in. Hg) or more of vacuum, close both the high and low hand valves of the manifold gauge set and stop vacuum pump. Then, check the system for leaks and repair as necessary.

(d) Close both the high and low hand valves and stop the vacuum pump.

(e) Leave the system in this condition for five minutes or longer and check that there is no change in the gauge indicator.

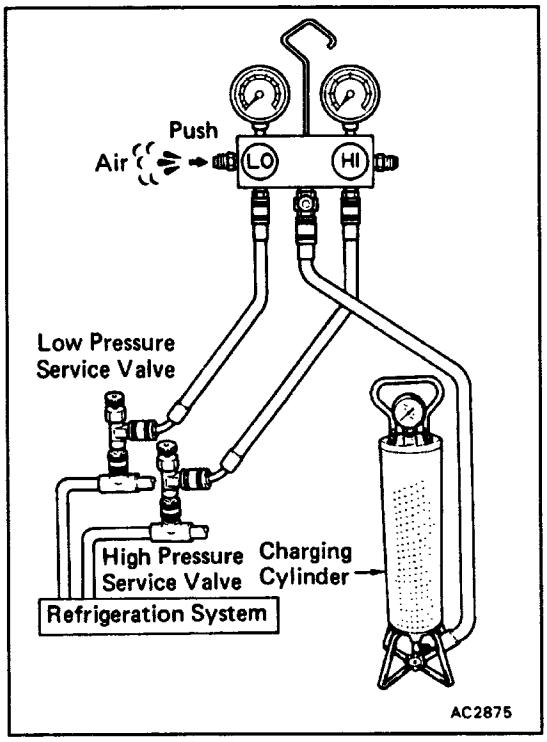

3. INSTALL CHARGING CYLINDER

NOTICE: When handling the charging cylinder, always follow the directions given in the instruction manual.

(a) Charge the proper amount of refrigerant in charging cylinder.

(b) Connect the center hose to charging cylinder.

NOTICE: Do not open both high and low hand valves ol manifold gauge set.

(c) Press on the schrader valve on the side of manifold gauge and expel the air inside of the center hose.

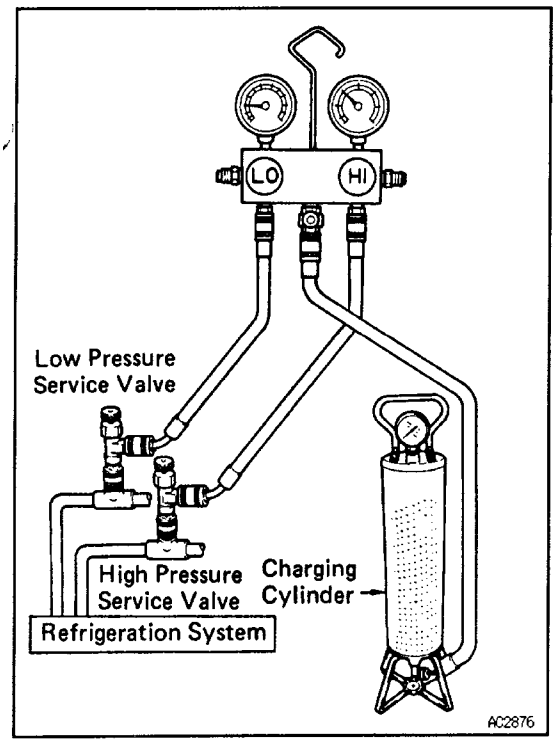

4. INSPECT REFRIGERATION SYSTEM FOR LEAKS

HINT: After evacuating the air in system, check the system for leakage.

(a) Open the high pressure hand valve to charge the system with refrigerant.

(b) When the low pressure gauge indicates 98 kPa (1 kgf/cm^2, 14 psi), close the high pressure hand valve.

(c) Using a gas leak tester, check the system for leakage. (f leak is found, repair the faulty component or con–nection.

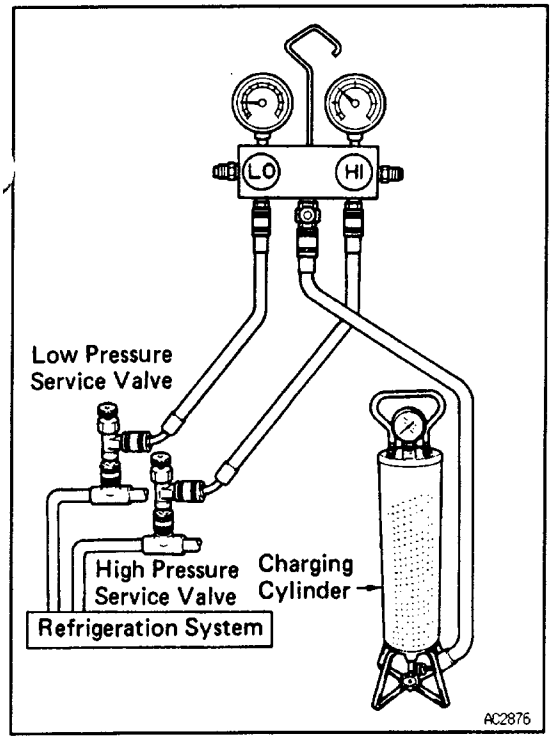

5. CHARGE EMPTY REFRIGERATION SYSTEM WITH REFRIGERANT (LIQUID)

HINT: This step is used to charge an empty system through the high pressure side with refrigerant in a liquid state.

NOTICE:

- **Never run the engine when charging the system through the high pressure side with refrigerant in a liquid state.**
- **Do not open the low pressure hand valve when the system is being charged with liquid refrigerant.**

(a) Open the high pressure hand valve fully.

(b) Charge the system with specified amount of refrig–erant, then close the high pressure hand valve.

HINT:

- A fully charged system is indicated by the sight glass being free of any bubbles.
- If the low pressure gauge does not show a reading the system is clogged and must be repaired.

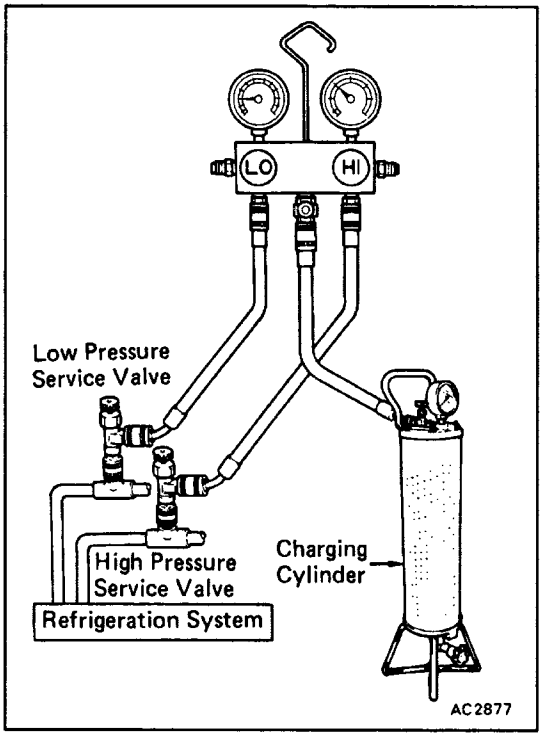

6. CHARGE PARTIALLY REFRIGERATION SYSTEM WITH REFRIGERANT (VAPOR)

HINT: This step is used to charge the system through the low pressure side with refrigerant in a vapor state.

NOTICE: Do not open the high pressure hand valve when running the engine.

(a) Run the engine at idling speed and operate the air conditioner.

(b) Open the low pressure hand valve.

NOTICE: Adjust the hand valve so that the low pressure gauge does not indicate over limited pressure of charging cylinder.

(c) Close the low pressure hand valve when the sight glass is free of any bubbles and stop the engine.

NOTICE: Be careful not to overcharge the system with refrigerant as it may cause of troubles.

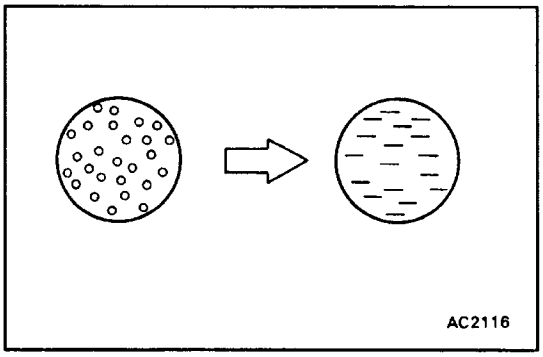

7. REMOVE MANIFOLD GAUGE SET FROM SERVICE VALVES

(See page AC–2)

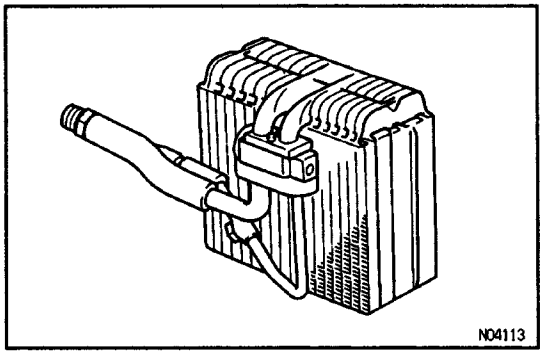

EVAPORATOR

AC097-02

EVAPORATOR INSPECTION

1. CHECK EVAPORATOR FINS FOR BLOCKAGE

If the fins are clogged, clean them with compressed air.

NOTICE: Never use water to clean the evaporator.

2. CHECK FITTINGS FOR CRACKS OR SCRATCHES

Repair as necessary.

AC098-02

EVAPORATOR REMOVAL AND INSTALLATION

(See page AC–25)

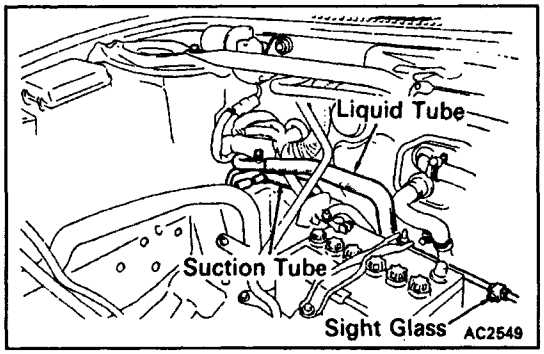

EXPANSION VALVE

AC0E3–01

ON–VEHICLE INSPECTION

1. INSPECT REFRIGERANT VOLUME

(See page AC–21**)**

2. INSTALL MANIFOLD GAUGE SET

(See page AC–16**)**

3. A/C SWITCH ON AND BLOWER SWITCH TO HI

4. RUN ENGINE AT APPROX. 2,000 RPM

Run the engine at 2,000 rpm for at least 5 minutes.

5. INSPECT EXPANSION VALVE

If the expansion valve is clogged, the low pressure reading will drop to 0 kPa (0 kgf/cm^2, 0 psi), otherwise it is OK.

AC0E4–01

EXPANSION VALVE REMOVAL

See Disassembly of Cooling Unit on page AC–25.

EXPANSION VALVE INSTALLATION

See Assembly of Cooling Unit on page AC–26.

AIR CONDITIONING SYSTEM

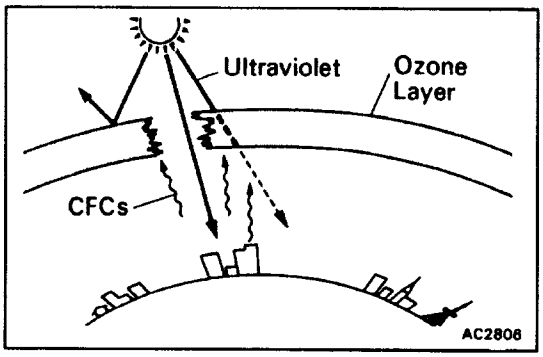

GENERAL INFORMATION

AC002–08

REFRIGERATION SYSTEM

Prevention of Refrigerant Release and Excessive Quantities

Refrigerant (CFCs) for automobile air conditioners is believed to cause harm by depleting the ozone layer which helps to protect us from the ultraviolet rays of the sun.

Therefore, it is necessary to prevent release of re–frigerant to the atmosphere and to use the minimum amount when servicing the air conditioner.

1. USE RECOVERY MACHINE TO RECOVER REFRIG–ERANT

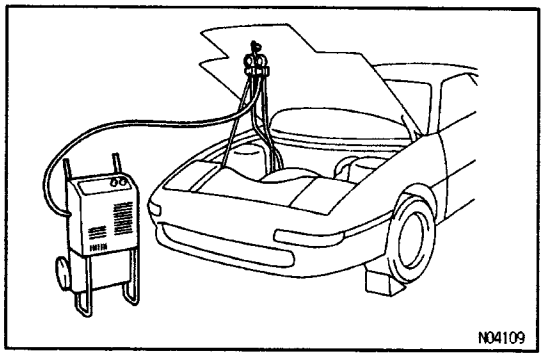

When discharging refrigerant from the system as follows, use a recovery machine to recover the re–frigerant.

Before replacing parts on the refrigerant line.

When moisture or air gets in the refrigerant line.

When excess refrigerant is charged.

NOTICE:

When handling the recovery machine, always follow the directions given in the instruction manual.

After recovery, the amount of compressor oil re–moved must be measured and the same amount added to the system.

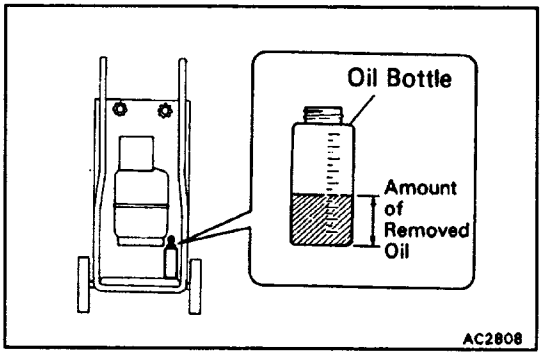

2. USE CHARGING HOSES WITH STOP VALVE WHEN INSTALLING MANIFOLD GAUGE SET

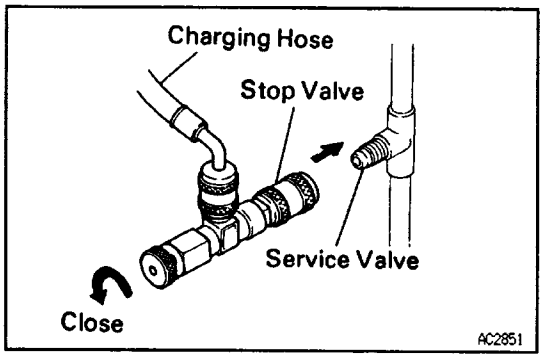

To prevent release of refrigerant, using charging hoses with a stop valve when installing the manifold gauge set to the service valves on the refrigerant line.

3. TIGHTEN CONNECTION PARTS SECURELY

Follow the notices about tightening connecting parts in step 6 on page AC–5.

4. PROPERLY EVACUATE AIR FROM REFRIGERANT SYSTEM

To prevent release and wasteful use of refrigerant, evacuate air with care from refrigeration system as follows.

Do not evacuate before recovering refrigerant in system.

Do not perform repeat evacuation of system.

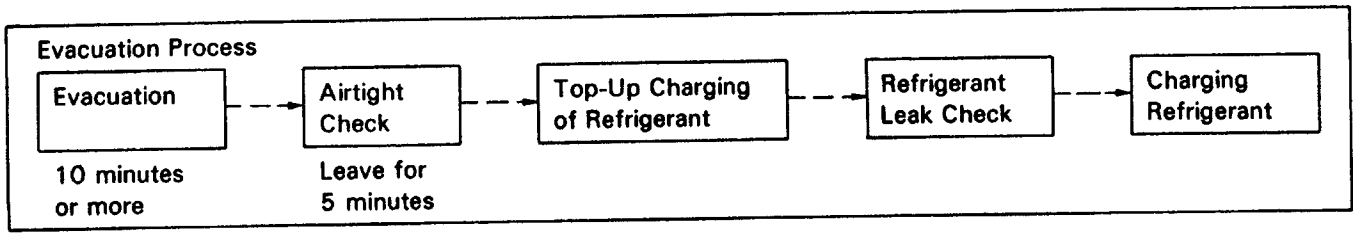

V00117

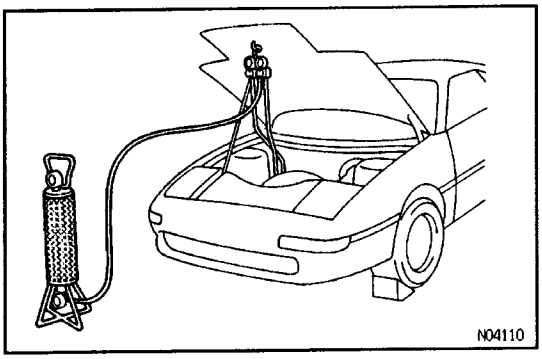

5. USE CHARGING CYLINDER To CHARGE PROPER AMOUNT OF REFRIGERANT

To prevent excessive use of refrigerant due to ove–rcharging, use a charging cylinder to charge the proper amount of refrigerant.

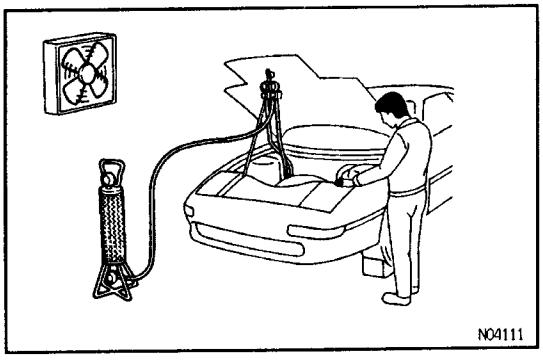

Handling Precautions for refrigerant

1. DO NOT HANDLE REFRIGERANT IN AN ENCLOSED AREA OF NEAR AN OPEN FLAME

2. ALWAYS WEAR EYE PROTECTION

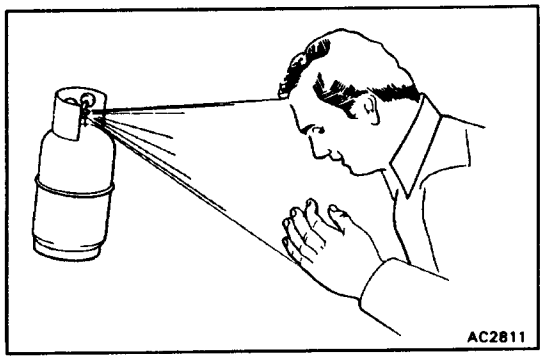

3. BE CAREFUL THAT LIQUID REFRIGERANT DOES NOT GET IN YOUR EYES OR ON YOUR SKIN

If liquid refrigerant gets in your eyes or on your skin.

(a) Wash the area with lots of cool water.

CAUTION: Do not rub your eyes or skin.

(b) Apply clean petroleum jelly to the skin.

(c) Go immediately to a physician or hospital for profes–sional treatment.

CAUTION: Do not attempt to treat yourself.

Handling Precautions For Refrigerant Container

1. NEVER HEAT CONTAINER OR EXPOSE IT TO NAKED FLAME

2. BE CAREFUL NOT TO DROP CONTAINER AND NOT TO APPLY PHYSICAL SHOCKS TO IT

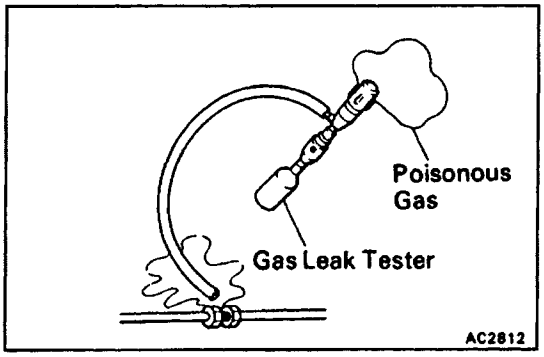

Handling Precautions for Gas–Cylinder Type Gas Leak Tester

1. BEFORE USING TESTER MAKE SURE THAT THERE ARE NO FLAMMABLE SUBSTANCES NEARBY

2. BE CAREFUL NOT TO INHALE POISONOUS GAS

If refrigerant gas comes in contact with flame, a poi–sonous gas is produced. During leak tests, do not inhale any gas.

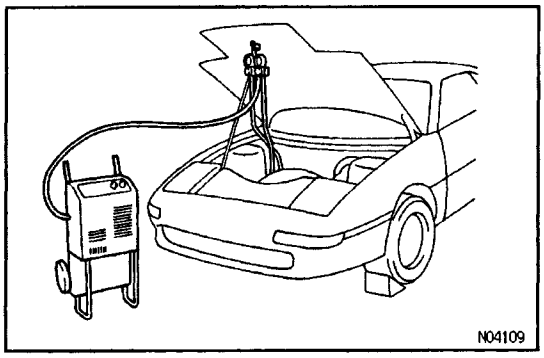

Precautions When Replacing Parts In Refrigerant Line

1. RECOVER REFRIGERANT IN SYSTEM BEFORE REMOVING PARTS

Using a recovery machine, recover refrigerant in system before removing the parts.

NOTICE: Do not release refrigerant to atmosphere.

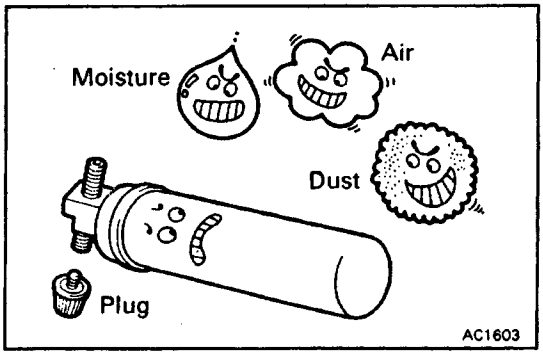

Z. INSERT PLUG IMMEDIATELY IN DISCONNECTED PARTS

Insert a plug immediately in the disconnected parts to prevent the entry of moisture and dust.

3. DO NOT REMOVE PLUG FROM NEW PARTS UNTIL IMMEDIATELY BEFORE INSTALLATION

4. DO NOT USE BURNER FOR BENDING OR LENGT–HENING OPERATIONS ON TUBE

If the tubes are heated with a burner, a layer of oxidation forms inside the tube, causing the same kind of trouble as an accumulation of dust.

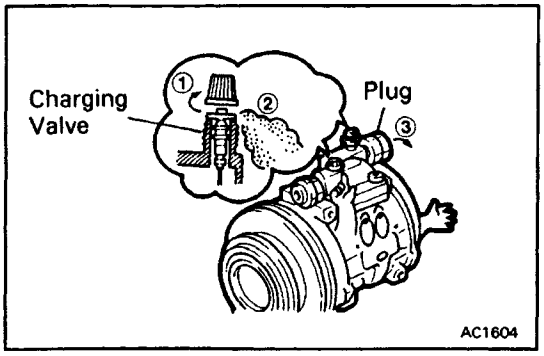

5. DISCHARGE GAS IN NEW COMPRESSOR FROM CHARGING VALVE BEFORE INSTALLING IT

If the gas in new compressor is not discharged first, compressor oil will spray out with gas when the plug is removed.

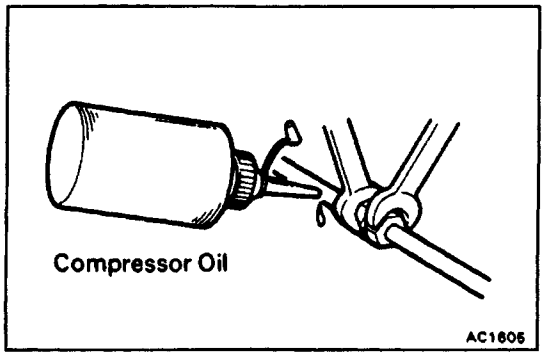

6. TIGHTEN CONNECTING PARTS SECURELY

- Securely tighten the connecting parts to prevent lea–king of refrigerant gas.
- Apply a few drops of compressor oil to 0–ring fittings for easy tightening and to prevent leaking of refrigerant gas.
- Tighten the nuts using two wrenches to avoid twisting the tube.

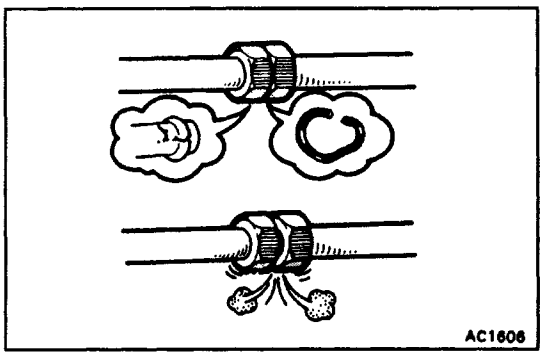

- Tighten the O–ring fittings or the bolted type fittings to the specified torque.

Precautions When Charging Refrigerant

1. DO NOT OPERATE COMPRESSOR WITHOUT ENOUGH REFRIGERANT IN REFRIGERANT CYCLE

If there is not enough refrigerant in the refrigerant cycle, oil lubrication will be insufficient and com–pressor burnout may occur, so take care to avoid this.

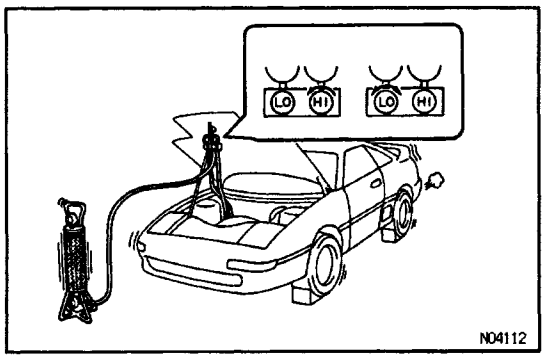

2. DO NOT OPEN HIGH PRESSURE VALVE OF MANI–FOLD WITH COMPRESSOR OPERATING

If the high pressure valve is opened, refrigerant flows in the reversed direction and could cause the charging cylinder to rupture, so open and close the low pres–sure valve only.

3. BE CAREFUL NOT TO OVERCHARGE WITH RE–FRIGERANT IN SYSTEM

If refrigerant is overcharged, it causes trouble such as insufficient cooling, poor fuel economy, engine ove–rheating etc.

AC003–03

ELECTRICAL PARTS

Before removing and inspecting the electrical parts, set the ignition switch to the LOCK position and disconnect the negative (–) terminal cable from bat–tery.

CAUTION: Work must not be started until after at least 30 seconds or longer from the time the negative (–) terminal cable is disconnected.

AC0DC–01

SRS AIRBAG SYSTEM

Failure to carry out service operation in the correct se–quence could cause the airbag system to deploy, possibly leading to a serious accident.

When removal or installation of the parts and the yellow wire harness and connector for the airbag is necessary, refer to the precautionary notices in the AB section before performing the operation.

PREPARATION

SST(SPECIAL SERVICE TOOLS)

AC08K – 02

	07110–58011 Air Conditioner Service Tool Set	
	(07117–58010) Refrigerant Dram Service Valve	
	(07117–78011) Refrigerant Charging Gauge	
	(07117–88013) Refrigerant Charging Hose	Green color
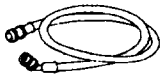	(07117–88022) Refrigerant Charging Hose	Blue color
	(07117–88040) Refrigerant Charging Hose	Orange color
	(—) Stop Valve	
	07110–61050 Wrench Set	
	07110–77011 Magnetic Clutch Tool Set	
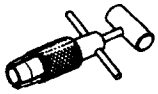	07112–15010 Seal Plate Remover	
	07112–25010 Shaft Seal Remover	
	07112–45021 Key Remover	
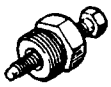	07112–71010 Magnetic Clutch Remover	

	07112–76040 Magnetic Clutch Stopper	
	07114–15010 Seal Plate Presser	
	07114–45010 Key Replacer	
	07114–84020 Snap Ring Pliers	
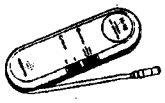	07116–38330 Gas Leak Detector Assembly	
	07117–48050 Vacuum Pump Assy	Rated voltage AC220V
	07117–48060 Vacuum Pump Assy	Rated voltage AC240V

RECOMMENDED TOOLS

AC008–05

	09082–00015 TOYOTA Electrical Tester	

AC009–02

EQUIPMENT

Part Name	Note
Voltmeter	Measures voltage
Ammeter	Measures current
Ohmmeter	Measures resistance

AC0DF–01

LUBRICANT

Item	Capacity	Classification
Compressor oil When replacing receiver When replacing condenser When replacing evaporator	20 cm³ (0.7 fl. oz.) 40–50 cm³ (1.4–1.7 fl. oz.) 40–50 cm³ (1.4–1.7 fl. oz.)	ND OIL6

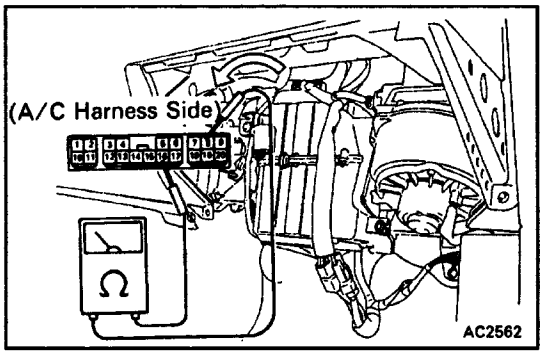

PRESSURE SWITCH

AC0EE–01

ON–VEHICLE INSPECTION

1. DISCONNECT CONNECTOR OF PRESSURE SWITCH

2. INSPECT PRESSURE SWITCH

(a) Install the manifold gauge set.

(b) Observe the gauge reading.

(c) Check the continuity between the two terminals of the pressure switch shown in the below.

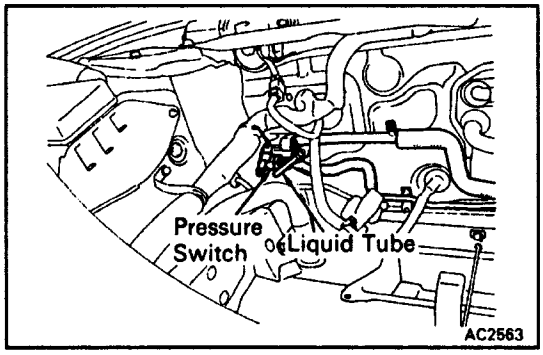

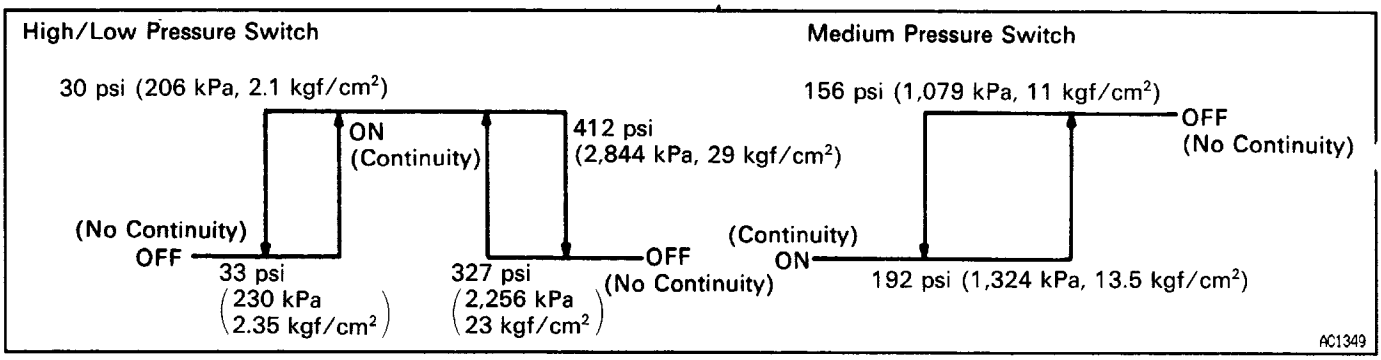

If defective, replace the pressure switch.

3. CONNECT CONNECTOR OF PRESSURE SWITCH

RECEIVER

AC091–01

ON–VEHICLE INSPECTION

INSPECT FITTINGS FOR LEAKAGE

Using a gas leak–tester, check for leakage.
If there is leakage, check the tightening torque at the joints.

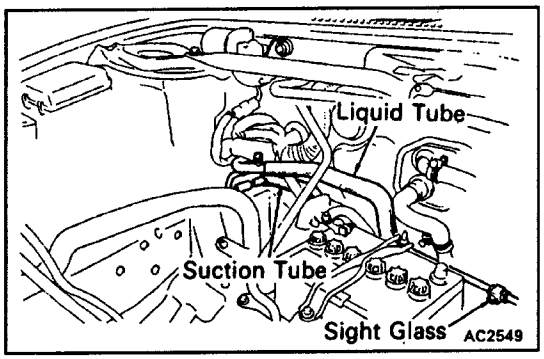

AC0DW–01

RECEIVER REMOVAL

1. **DISCHARGE REFRIGERANT FROM REFRIGERATION SYSTEM**
2. **REMOVE LEFT SIDE FRONT FENDER LINER AND UNDER COVER**
3. **DISCONNECT TWO LIQUID TUBES FROM RECEIV–ER**

   HINT: Cap the open fittings immediately to keep moisture out of the system.
4. **REMOVE RECEIVER FROM RECEIVER HOLDER**

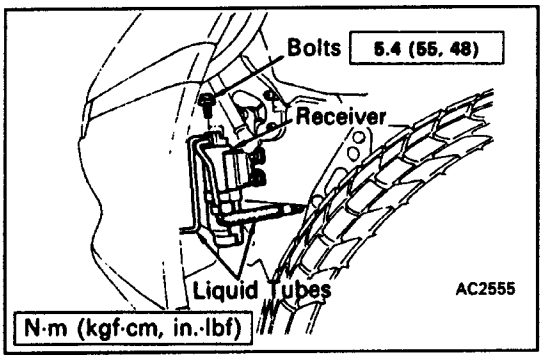

AC0DX–01

RECEIVER INSTALLATION

1. **INSTALL RECEIVER IN RECEIVER HOLDER**

   HINT: Do not remove the blind plugs until ready for connection.
2. **CONNECT TWO LIQUID TUBES TO RECEIVER**

   Torque: 5.4 N–m (55 kgf–cm, 48in.–lbf)
3. **REINSTALL FENDER LINER AND UNDER COVER**
4. **IF RECEIVER WAS REPLACED. ADD COMPRESSOR OIL TO COMPRESSOR**

   Add 20 cc (0.7 fl.oz.)

   Compressor oil:

   ND OIL6. SUNISO N0.5GS or equivalent
5. **EVACUATE AIR FROM REFRIGERATION SYSTEM**
6. **CHARGE SYSTEM WITH REFRIGERANT AND IN–SPECT FOR LEAKAGE OF REFRIGERANT**

   Specified amount:

   850 ±50 g (29.98 ± 1.76 oz.)

REFRIGERANT LINES

TIGHTENING TORQUE OF REFRIGERATION LINES

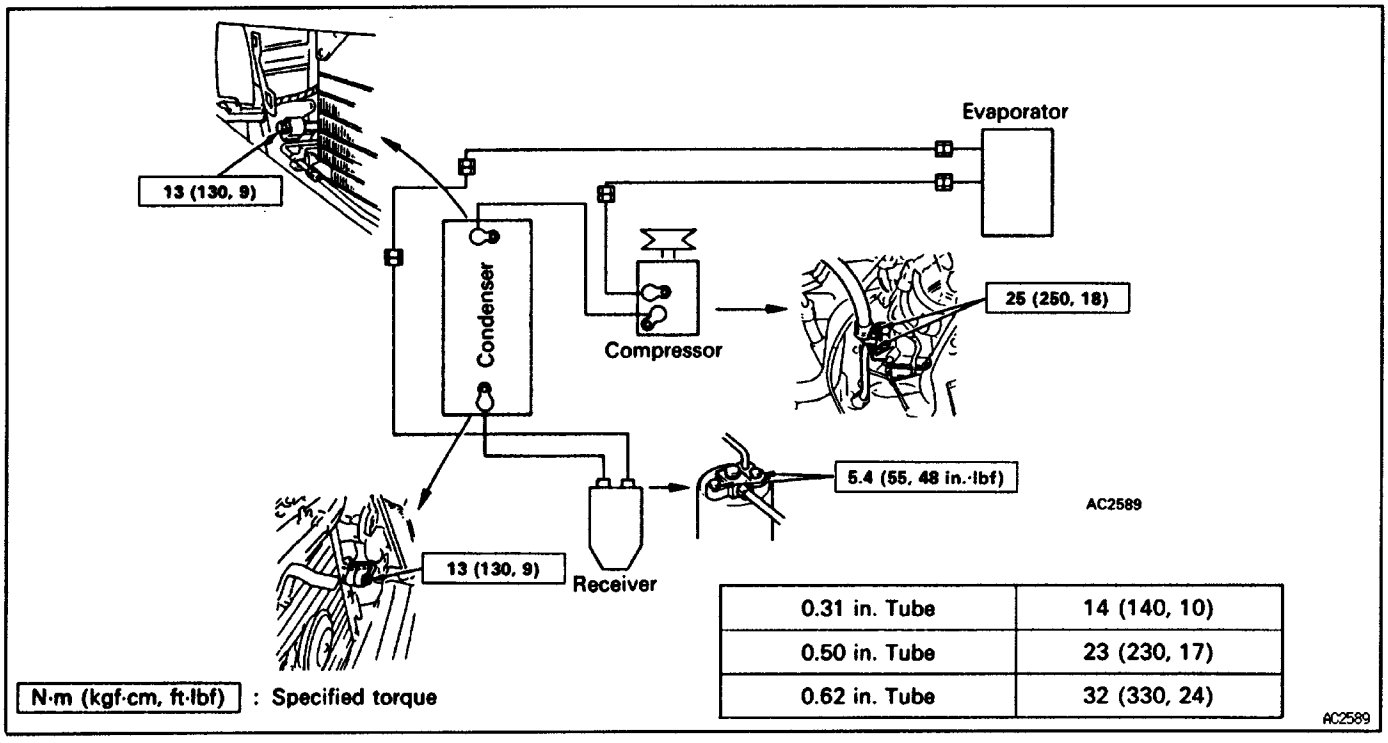

0.31 in. Tube	14 (140, 10)
0.50 in. Tube	23 (230, 17)
0.62 in. Tube	32 (330, 24)

AC00M–08

ON–VEHICLE INSPECTION

1. INSPECTION HOSE AND TUBE CONNECTIONS FOR LOOSENESS

2. INSPECT HOSES AND TUBES FOR LEAKAGE

Using a gas leak tester, check for leakage of refrig–erant.

ACOON–04

REFRIGERANT LINES REPLACEMENT

1. RECOVER REFRIGERANT IN REFRIGERATION SYSTEM

2. REPLACE FAULTY TUBE OR HOSE

HINT: Cap the open fittings immediately to keep moisture or dirt out of the system.

3. TORQUE CONNECTIONS TO SPECIFIED TORQUE

NOTICE: Connections should not be torque tighter than the specified torque.

4. EVACUATE AIR IN REFRIGERATION SYSTEM AND CHARGE WITH REFRIGERANT

Specified amount:
850±50 g (29.89±1.76 oz.)

5. INSPECT FOR LEAKAGE OF REFRIGERANT

Using a gas leak tester, check for leakage of refrig–erant.

6. INSPECT AIR CONDITIONER OPERATION

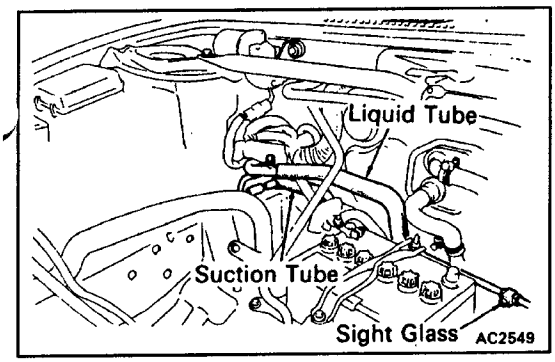

REFRIGERANT VOLUME

AC00G–02

REFRIGERANT VOLUME INSPECTION

1. RUN ENGINE AT IDLE SPEED

2. OPERATE A/C AT MAXIMUM COOLING FOR A FEW MINUTES

3. INSPECT AMOUNT OF REFRIGERANT

Observe the sight glass on the liquid tube.

Item	Symptom	Amount of refrigerant	Remedy
1	Bubbles present in sight glass	Insufficient*	(1) Check for gas leakage with gas leak tester and repair if necessary (2) Add refrigerant until bubbles dis–apear
2	No bubbles present in sight glass	None, sufficient or too much	Refer to items 3 and 4
3	No temperature difference between compressor inlet and outlet	Empty or nearly empty	(1) Check for gas leakage with gas lea–ktester and repair if necessary (2) Add refrigerant until bubbles disap–pear
4	Temperature between compressor inlet and outlet is noticeably different ’	Proper or too much	Refer to items 5 and 6
5	Immediately after air conditioner is turned off, refrigerant in sight glass stays clear	Too much	(1) Recover refrigerant (2) Evacuate air and charge proper amount of purified refrigerant
6	When air conditioner is turned off, re–frigerant foams and then stay clear	Proper	–

*: Bubbles in the sight glass with ambient tempera–tures higher can be considered normal if cooling is sufficient.

AC00H–03

REFRIGERANT CHARGE VOLUME

Specified amount:

850 ±50 g (29.98 ±1.76 oz.)

RELAYS

AC0EB–01

RELAYS INSPECTION

1. INSPECT HEATER MAIN RELAY CONTINUITY

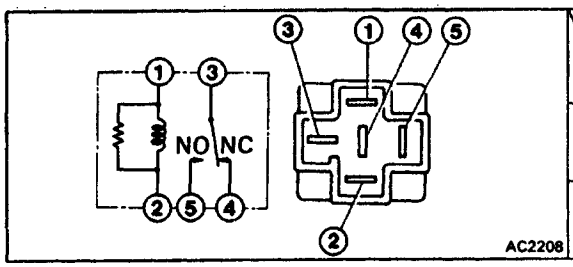

Terminal / Condition	1	2	3	4	5
Constant	○—≈≈—○		○—○		
Apply battery voltage to terminal 1 and 2			○	○	○

V00824

If continuity is not as specified, replace the relay.

2. INSPECT MAGNETIC CLUTCH RELAY CONTINUITY

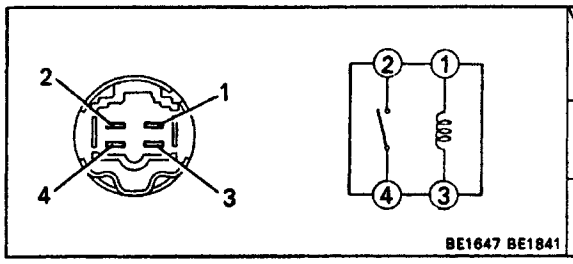

Terminal / Condition	1	2	3	4
Constant	○	≈≈	○	
Apply battery voltage to terminals 1 and 3.		○		○

V00825

If continuity is not as specified, replace the relay.

3. INSPECT FAN MAIN RELAY

Check the relay the same way as for the Heater Main Relay.

4. INSPECT FAN RELAY NO.1 CONTINUITY

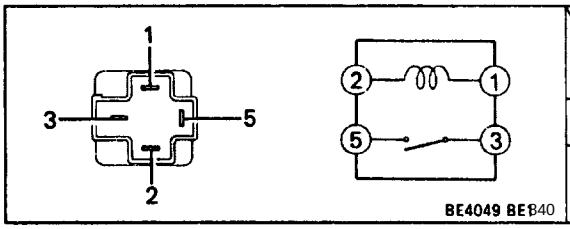

Terminal / Condition	1	2	3	5
Constant	○—⌇⌇⌇—○			
Apply battery voltage to terminals 1 and 2.			○——○	

V00825

If continuity is not as specified, replace the relay.

5. INSPECT FAN RELAY NO.2 CONTINUITY

Check the relay the same way as for the Heater Main Relay.

6. INSPECT FAN RELAY NO.3 CONTINUITY

Check the relay the same way as for the Heater Main Relay.

SERVICE SPECIFICATIONS

AC0AB–02

SERVICE DATA

Refrigerant volume		850 ± 50 g (29.98 ± 1.76 oz.)
Drive belt tension		
	New belt	160 ± 25 lbf
	Used belt	100 ± 25 lbf
Pressure plate clearance		0.8 ± 0.2 mm (0.32 ± 0.08 in.)
Magnetic clutch clearance		0.8 ± 0.2 mm (0.32 ± 0.08 in.)
Idle –up speed		950 ± 50 rpm
Thermistor resistance		1,500 Ω at 25°C (77°F)
Water temperature sensor resistance		
	85° C (185° F)	Approx. 1.35 kΩ
	90° C (194° F)	Approx. 1.19 kΩ
	95° C (203° F)	Approx. 1.05 kΩ

AC0AC–02

TORQUE SPECIFICATIONS

Part tightened		N–m	kgf–cm	ft–lbf
Suction tube x Cooling unit		32	330	24
Liquid tube x Cooling unit		14	140	10
Idle pulley bracket x Compressor	12 mm bolt	25	250	18
	14 mm bolt	37	375	27
Compressor x Suction hose		25	250	18
Compressor x Discharge hose		25	250	18
Liquid tube x Receiver		5.4	55	48 in.-lbf
Condenser x Suction tube		13	130	9
Condenser x Discharge tube		13	130	9
Pressure plate x Compressor		16	165	12
Front housing x Front cylinder		25	260	19
Service valve x Compressor		25	260	19

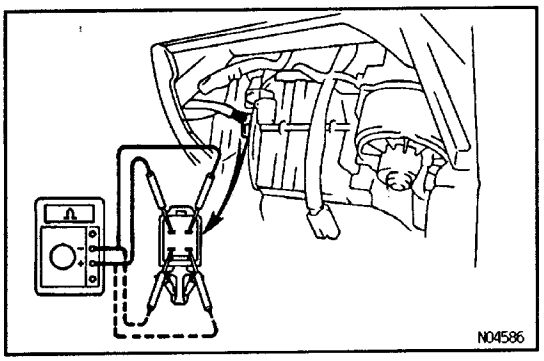

THERMISTOR

AC0EA–01

ON–VEHICLE INSPECTION

1. DISCONNECT NEGATIVE BATTERY CABLE

2. REMOVE GLOVE BOX

3. CHECK RESISTANCE OF THERMISTOR

Measure the resistance between terminals.

Standard resistance:

1,500 Ω at 25˚C (77˚F)

If resistance value is not as specified, replace the thermistor.

AC0EB–01

THERMISTOR REMOVAL

See Disassembly of Cooling Unit on page AC–25.

AC0EC–01

THERMISTOR INSPECTION

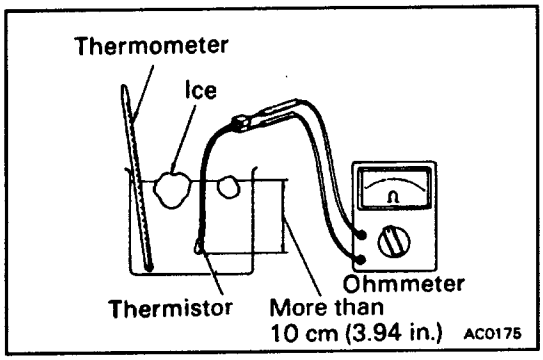

INSPECT THERMISTOR OPERATION

(a) Place the thermistor in cold water. While varying the temperature of the water, measure the resistance at the connector and at the same time, measure the temperature of the water with a thermometer.

(b) Compare the two readings on the chart.

If the intersection is not between the two lines, replace the thermistor.

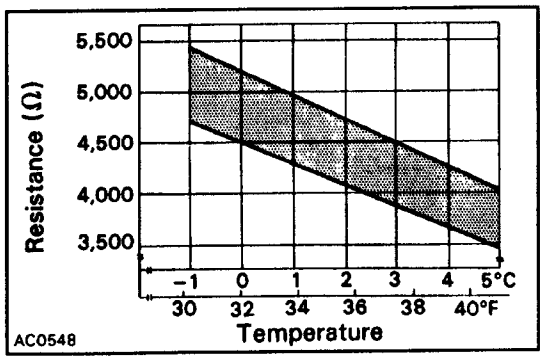

AC0ED–01

THERMISTOR INSTALLATION

See Assembly of Cooling Unit on page AC–26.

TROUBLESHOOTING

You will find the cause of trouble more easily by properly using the table shown below. In this table, the numbers indicate the order of priority of the causes of trouble. Check each part in the order shown. If necessary, replace the part.

See page / Parts Name / Trouble	Inspect Volume of Refrigerant (AC–21)	Inspect Refrigeration System with Manifold Gauge Set (AC–18)	Inspect Drive Belt Tension (AC–22)	Fusible Link (ALT) (AC–8, 9)	Circuit Breaker (HEATER) (AC–8, 9)	Fuse (A/C) (AC–8, 9)	Pressure Switch (AC–56)	Thermistor (AC–55)	ECTS (EG–305 378)	Heater Main Relay (AC–53)	Magnetic Clutch Relay (AC–53)	Engine Main Relay and Fan Relay No. 1, 2, 3 (EG–303, 375)	Blower Resistor (AC–52)	Air Inlet Servomotor (AC–48)
No blower operation				1	2					3			6	
No blower control														
No air flow mode control														
No air inlet control														2
Insufficient flow of cool air										1			3	
Insufficient flow of warm air										1			3	
No cool air comes out	3	4	5			1	6	12			2			
Cool air comes out intermittently	1	2	3					5						
Cool air comes out only at high engine speed	2	3	1											
Insufficient cooling	1	2	3					13	7			6		
No warm air comes out														
Air temp. control not functioning														
No engine idle up when A/C switch on														

V00871

Mode Servomotor	Blower Motor	Condenser Fan Motor	A/C Control Assembly	A/C Amplifier.	Compressor	Condenser	Evaporator	Expansion Valve (Replace)	Magnetic Clutch	Receiver	Water Valve	Radiator (in Heater Unit)	A/C Idle Up VSV	Wiring or Wiring Connection
AC–49	AC–47	EG–373, 444	AC–5.9	AC–62	AC–28	AC–44	AC–46		AC–30	AC–43		—	AC–51	AC–8, 9
	5		4											7
			1											3
2			1											3
			1											3
	2						4							5
	2											4		5
			10	11	8				7		9			13
				4				6						7
					5	4								
		8		12	11	4	14	15	10	5	9			
			2								1	3		4
			2								1			3
				2									1	3

V00872

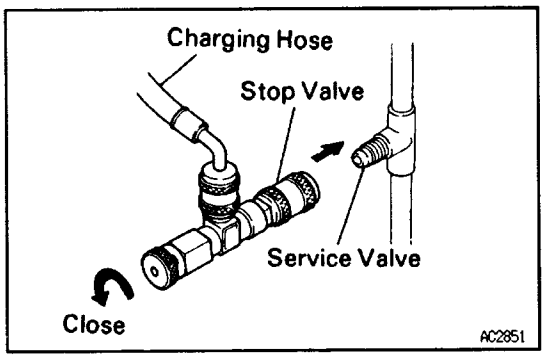

USE OF MANIFOLD GAUGE SET

MANIFOLD GAUGE SET INSTALLATION

HINT: To prevent releasing refrigerant, use charging hoses with a stop valve when installing the manifold gauge set to service valves on the refrigerant line.

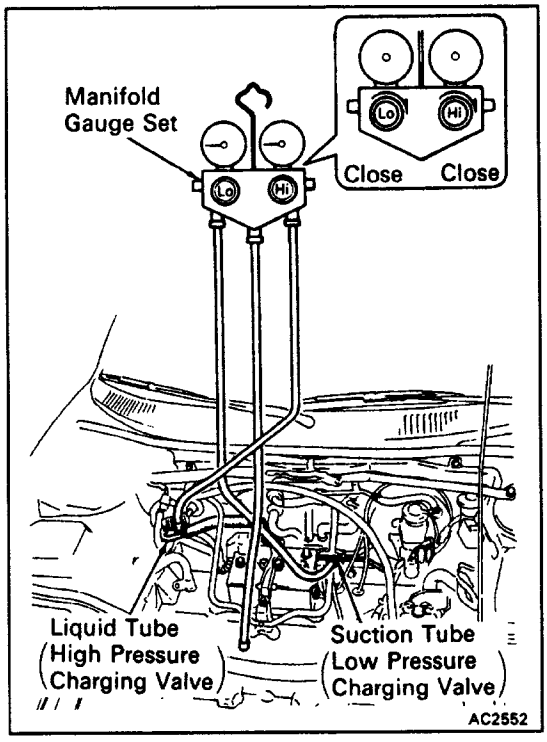

1. CONNECT CHARGING HOSES WITH A STOP VALVE TO MANIFOLD GAUGE SET

Tighten the nuts by hand.

CAUTION:

- Do not connect the wrong hoses to the high pres–sure and the low pressure side.
- To prevent loosening the nuts, do not apply com–pressor oil to seat of the connection.

2. CLOSE HAND VALVES OF BOTH STOP VALVES

3. CLOSE BOTH HAND VALVES OF MANIFOLD GAUGE SET

4. REMOVE CAPS FROM SERVICE VALVES ON RE–FRIGERANT LINE

5. CONNECT STOP VALVES TO SERVICE VALVES

Tighten the nuts by hand.

CAUTION:

- Do not connect the wrong hoses to the high pres–sure and the low pressure sides.
- To prevent loosening the nuts, do not apply com–pressor oil to seat of the connection.

6. OPEN HAND VALVES OF BOTH STOP VALVES

MANIFOLD GAUGE SET REMOVAL AC00C–02

1. CLOSE BOTH HAND VALVES OF MANIFOLD GAUGE SET

2. CLOSE HAND VALVES OF BOTH STEP VALVES

3. DISCONNECT STOP VALVES FROM SERVICE VALVES ON REFRIGERANT LINE

4. INSTALL CAPS TO SERVICE VALVES ON REFRIGERANT LINE

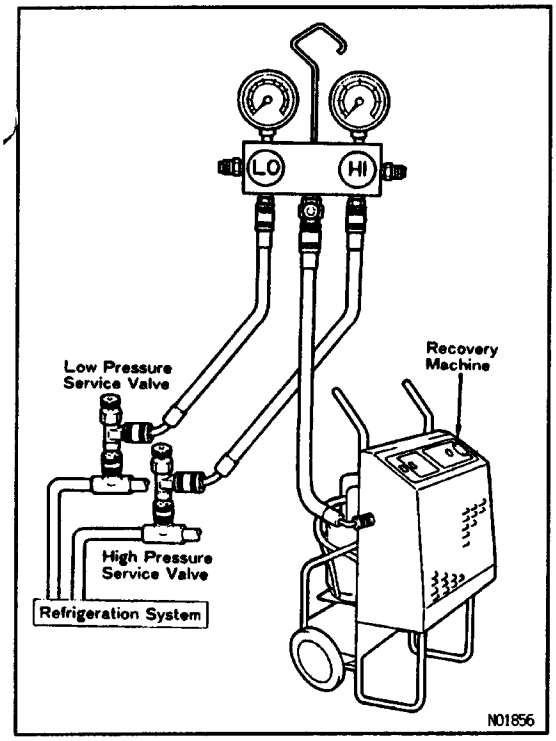

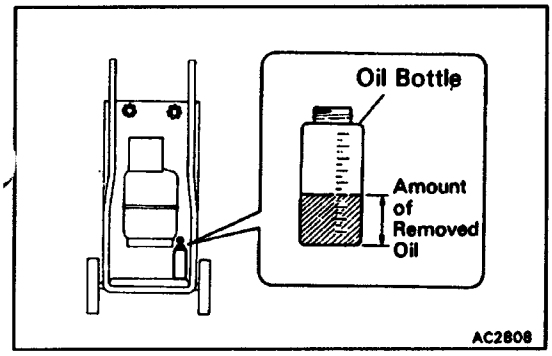

USE OF REFRIGERANT RECOVERY MACHINE

AC00D–02

RECOVERING OF REFRIGERANT IN REFRIGERANT SYSTEM

When discharging refrigerant from the system as follows, use a recovery machine to recover the re–frigerant.

Before replacing parts on the refrigerant line.

When moisture or air gets in the refrigerant line.

When excess refrigerant is charged.

NOTICE:

- **When handling the recovery machine, always follow the directions given in instruction manual.**
- **After recovery, the amount of compressor oil re–moved must be measured and same amount added into the system.**

1. INSTALL MANIFOLD GAUGE SET TO SERVICE VALVES

2. RECOVER REFRIGERANT FROM REFRIGERATION SYSTEM

(a) Connect the center hose to recovery machine.

(b) Operate the recovery machine.

(c) Open both high and low hand valves of manifold gauge set.

3. STOP RECOVERY MACHINE WHEN RECOVERING HAS FINISHED

4. REMOVE MANIFOLD GAUGE SET FROM SERVICE VALVES

VACUUM SWITCHING VALVE (VSV)

IDLE–UP SPEED INSPECTION (3S–GTE only)

1. WARM UP ENGINE

2. SET VEHICLE IN FOLLOWING

- Transmission position to Neutral
- A/C switch ON and Magnetic clutch engaged
- Blower speed control switch to HI
- Door window fully opened

3. INSPECT IDLE–UP SPEED

Standard:

950 ±50 rpm

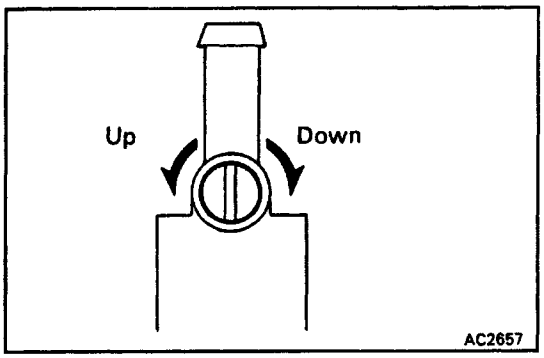

AC058–01

IDLE–UP SPEED ADJUSTMENT

If idle–up speed is not as specified, adjust the idle–up speed turning the idle speed adjusting screw on the VSV.

NOTICE: Do not use too much force when tightening the idle adjusting screw.

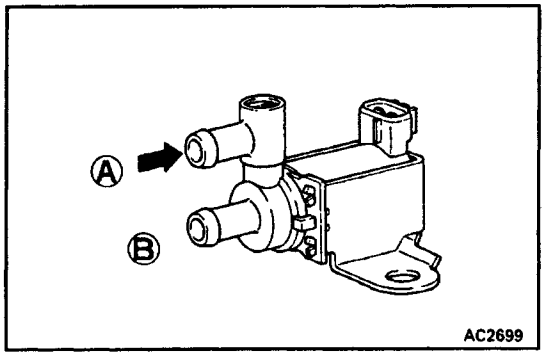

AC057–01

VSV OPERATION INSPECTION

INSPECT VSV OPERATION

(a) Blow into pipe ”A” and check that air does not come out of pipe ”B”.

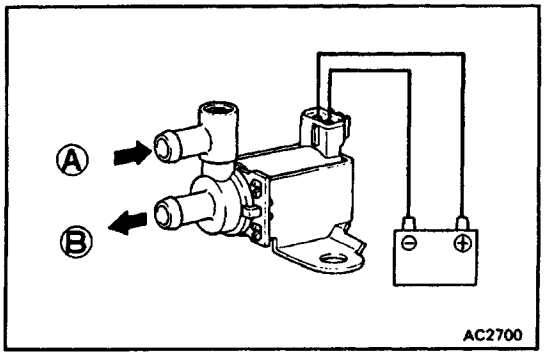

(b) Apply battery voltage (12V) between the terminals 1 and 2.

(c) Blow into pipe ”A” and check that air comes out of pipe ”B”.

If a problem is found, replace the VSV.

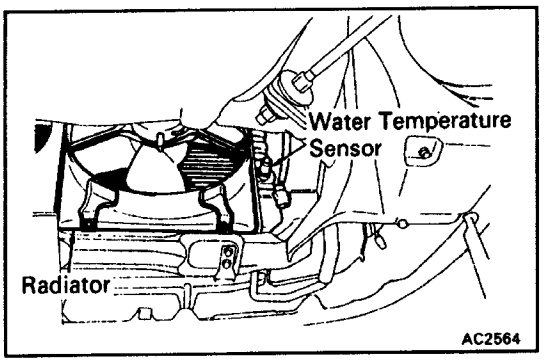

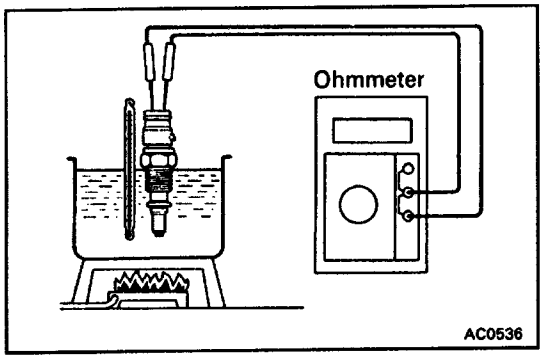

WATER TEMPERATURE SENSOR

AC0EF–01

WATER TEMPERATURE SENSOR INSPECTION

INSPECT WATER TEMPERATURE SENSOR

Using an ohmmeter, measure the resistance of the water temperature sensor.

Water temperature	Resistance
85°C (185°F)	approx. 1.35 kΩ
90° C (194° F)	approx. 1.19 kΩ
95° C (203° F)	approx. 1.05 kΩ

If resistance value is not as specified, replace the sensor.

BACK WINDOW GLASS

B00C4–01

COMPONENTS

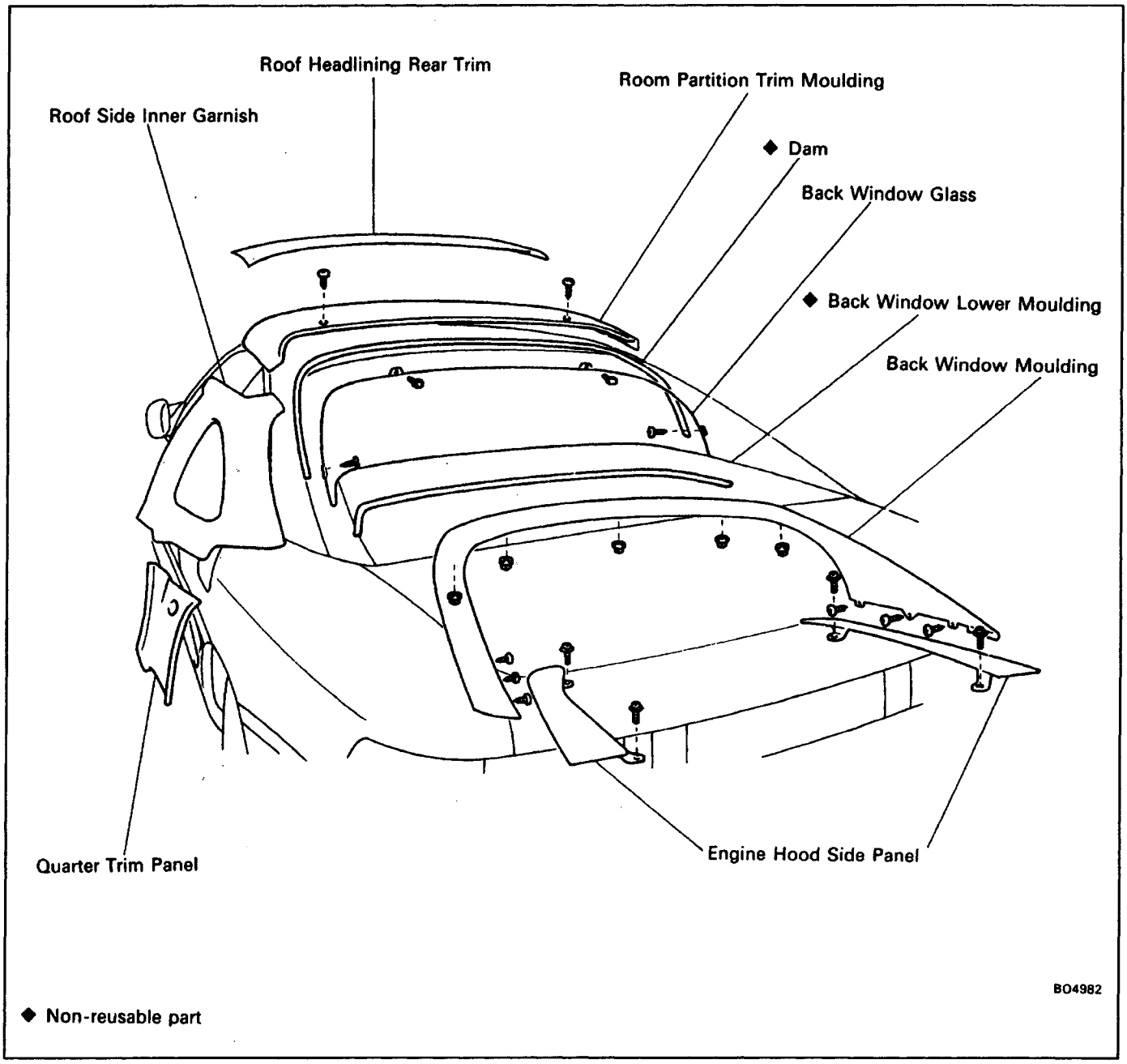

B00C5–01

BACK WINDOW GLASS REMOVAL

1. REMOVE BACK WINDOW MOULDINGS
   (See step 1 to 3 on pages BO–39 to BO–40)
2. DISCONNECT DEFOGGER WIRE CONNECTORS

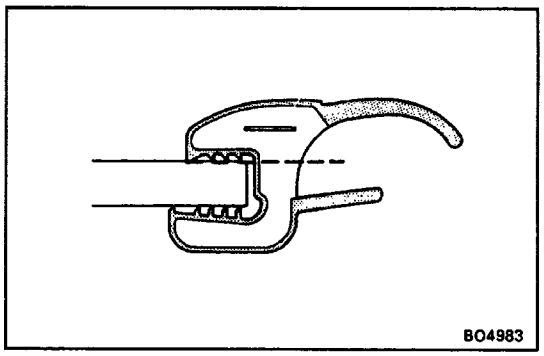

3. REMOVE BACK WINDOW LOWER MOULDING
Using the knife, cut off the moulding as shown.
NOTICE: Do not damage the body with the knife.

4. REMOVE BACK WINDOW GLASS

(a) Remove two screws.

(b) Remove the glass in the same manner as windshield. (See step 1 1 on page BO–43)

BACK WINDOW GLASS INSTALLATION

(See page BO–51)

1. CLEAN AND SHAPE CONTACT SURFACE OF BODY (See step 1 on page BO–43)

2. CLEAN REMOVED GLASS BEFORE INSTALLATION (See step 2 on page BO–43)

3. CLEAN CONTACT SURFACE OF GLASS (See step 4 on page BO–44)

4. INSTALL SPACER AND CLIP
Using adhesive, install two spacers and two clips to the glass.
Fit the spacers and the clips into the cut–out portion in the ceramic.

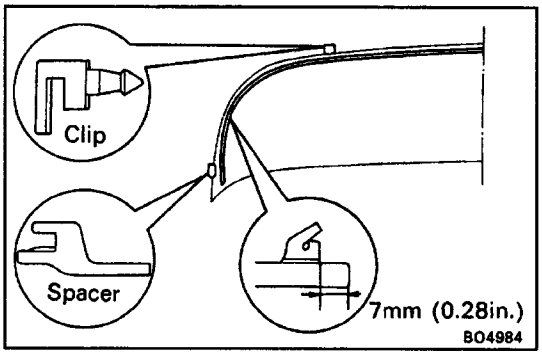

5. INSTALL DAM
Install the dam with double–stick tape s shown in the drawing.
NOTICE: Do not touch the glass face after cleaning it.

6. COAT CONTACT SURFACE OF BODY WITH PRIMER ”M” (See step 6 on page BO–44)

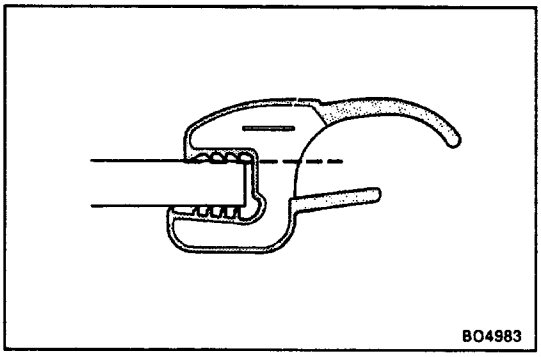

7. INSTALL BACK WINDOW LOWER MOULDING
Install the moulding to the glass.

8. COAT CONTACT SURFACE OF GLASS WITH PRIMER ”G’

(a) Using brush or sponge, coat the edge of the glass and the contact surface with Primer G.

(b) Before the Primer dries, wipe it off with a clean cloth.
NOTICE: Be sure that installation of the glass is finished within 70 minutes.

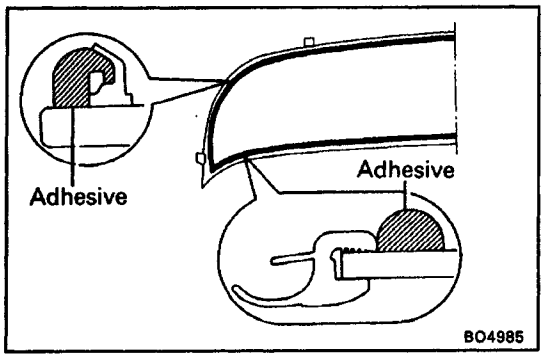

9. MIX ADHESIVE COATING
(See step 8 on page BO–44)

10. APPLY ADHESIVE

(a) Cut of the tip of the cartridge nozzle to make a hole 5 mm (0.20 in.) in diameter. Fill the cartridge with adhesive.

(b) Load the cartridge into the sealer gun.

(c) Coat the glass with adhesive on all contact surfaces along the ridge.

Adhesive height:

If adhesive remains on body
3.5–5.0 mm (0.138–0.187 in.)
If no adhesive remains on body
8–10 mm (0.31–0.39 in.)

11. INSTALL GLASS WITH LOWER MOULDING
(See step 10 on page BO–45)
HINT: Align the clips with the body holes, then install two screws.

12. INSPECT FOR LEAKS AND REPAIR
(See step 11 on page BO–45)

13. INSTALL BACK WINDOW MOULDINGS
(See step 1 to 3 on page BO–40)

14. CONNECT DEFOGGER WIRE CONNECTORS

BACK WINDOW MOULDING

BO0BV–01

COMPONENTS

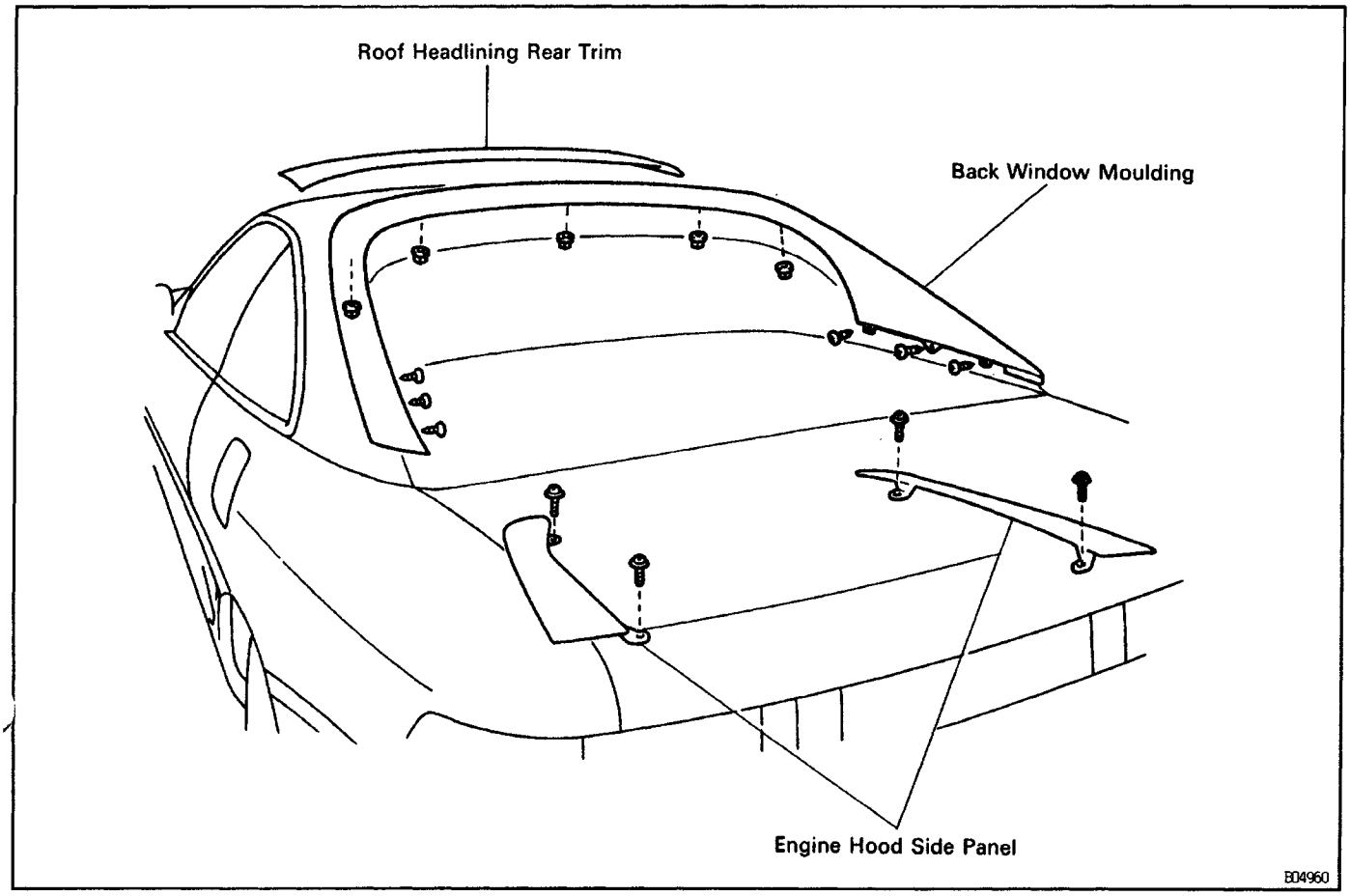

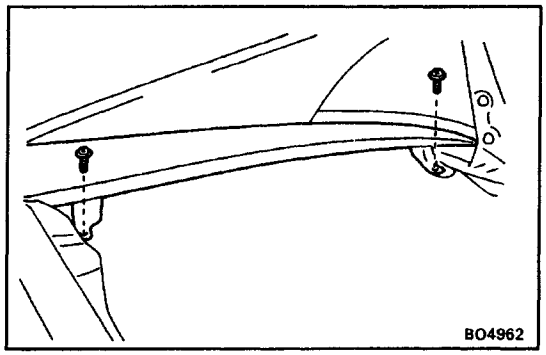

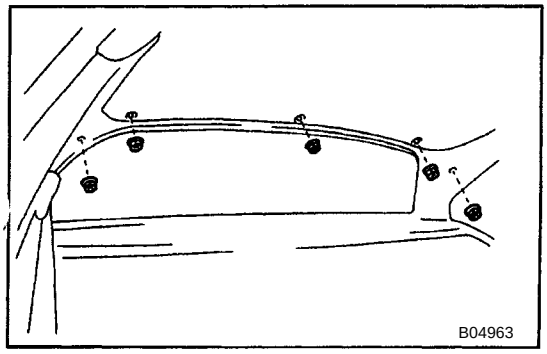

BACK WINDOW MOULDING REMOVAL

1. **REMOVE ENGINE HOOD SIDE PANELS**
   Remove four screws and two panels.
2. **REMOVE FOLLOWING PARTS:**
   (See steps 1 to6 on pages BO–47 to BO–48)

(a) Door scuff plate
(b) Roof headlining rear trim
(c) Room partition trim moulding
(d) Quarter trim panel
(e) Seat belt shoulder anchor
(f) Roof side inner garnish

3. **REMOVE BACK WINDOW MOULDING**

(a) Remove five nuts.

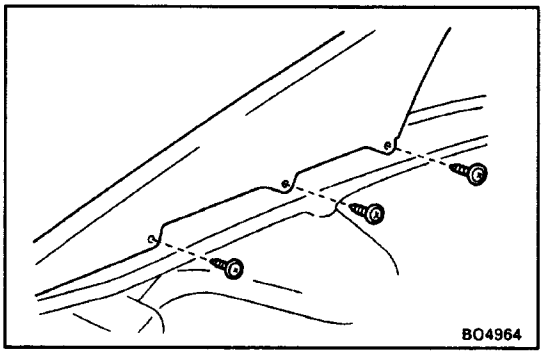

(b) Remove six screws.

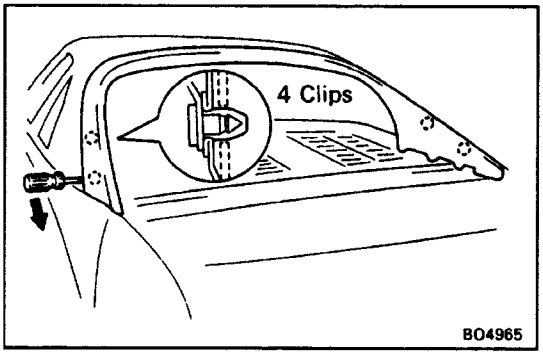

(c) Insert the screwdriver between the moulding and the panel to pry out.
HINT: Tape the screwdriver tip before use.
(d) Pull the moulding upward to remove it.
NOTICE: Do not damage the body.

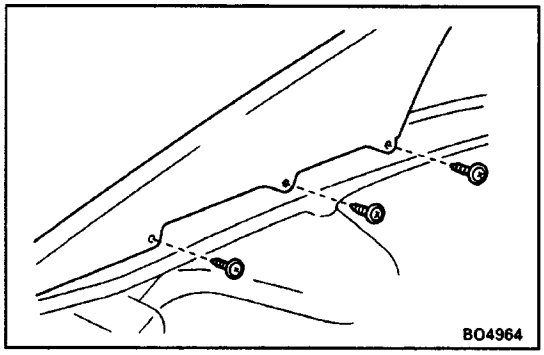

B008X–01

BACK WINDOW MOULDING INSTALLATION

(See page BO–39)

1. INSTALL BACK WINDOW MOULDING

(a) Tap the moulding and, fix it in place with the clips.
(b) Install six screws.

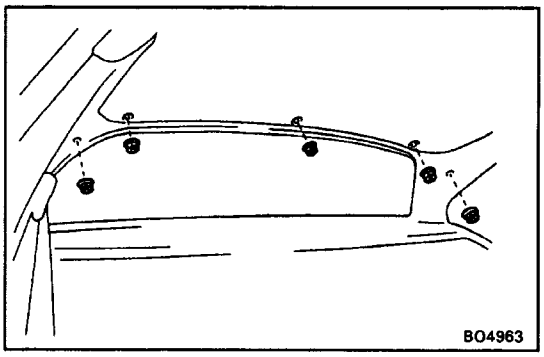

(c) Install five nuts.

2. INSTALL FOLLOWING PARTS:

(a) Roof side inner garnish
(b) Seat belt shoulder anchor
Torque: 43 N–m (440 kgf–cm, 32 ft–lbf)
(c) Quarter trim panel
(d) Room partition trim moulding
(e) Roof headlining rear trim
(f) Door scuff plate

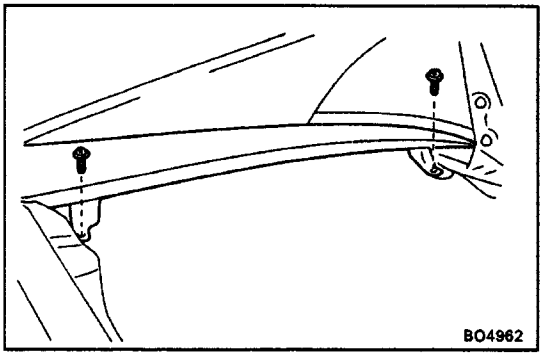

3. INSTALL ENGINE HOOD SIDE PANELS

Install two panels with four screws.

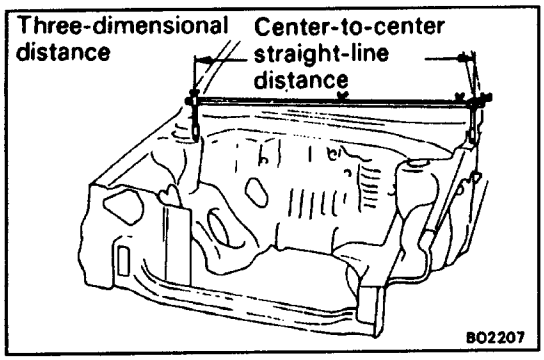

BODY DIMENSIONS

BO03G–01

GENERAL INFORMATION

1. BASIC DIMENSIONS

(a) There are two types of dimensions in the diagram.
(Three–dimensional distance)

- Straight–line distance between the centers of two measuring points.

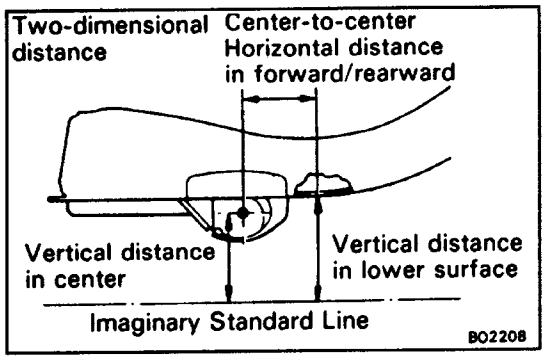

(Two–dimensional distance)

- Horizontal distance in forward / rearward be–tween the centers of two measuring points.
- The height format imaginary standard line.

(b) In cases in which only one dimension is given, left and right are symmetrical.

(c) The dimensions in the following drawing indicate actual distance. Therefore, please use the dimensions as a reference.

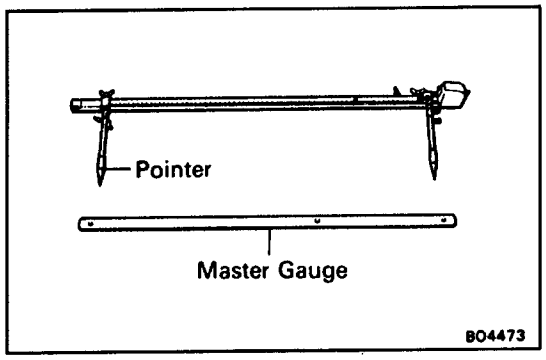

2. MEASURING

(a) Basically, all measurements are to be done with a tacking gauge. For portions where it is not possible to use a tracking gauge, a tape measure should be used.

(b) Use only a tracking gauge that has no looseness in the body, measuring plate, or pointers.

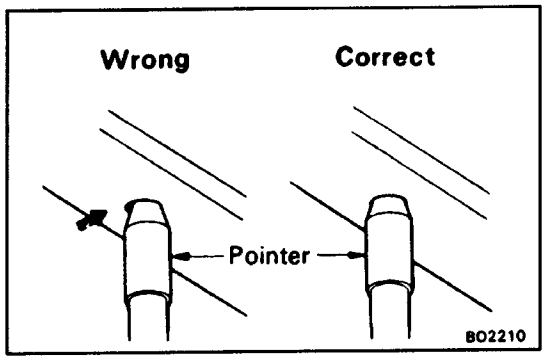

HINT:

1. The height of the left and right pointers must be equal.
2. Always calibrate the tracking gauge before measuring or after adjusting the pointer height.
3. Take care not to drop the tracking gauge or otherwise shock it.
4. Confirm that the pointers are securely in the holes.

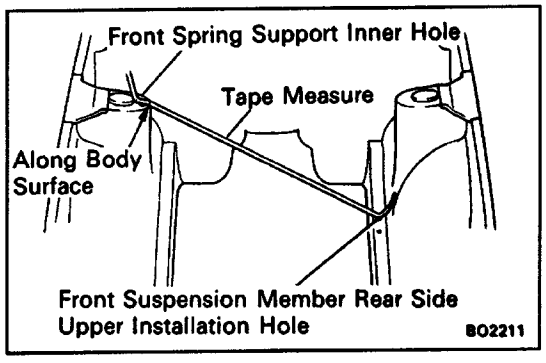

(c) When using a tape measure, avoid twists and bends in the tape.

(d) When tracking a diagonal measurement from the front spring support inner hole to the suspension member upper rear installation hole, measure along the front spring support panel surface.

BO0CV–01

BODY DIMENSIONS

FRONT LUGGAGE COMPARTMENT

(Three-Dimensional Distance)

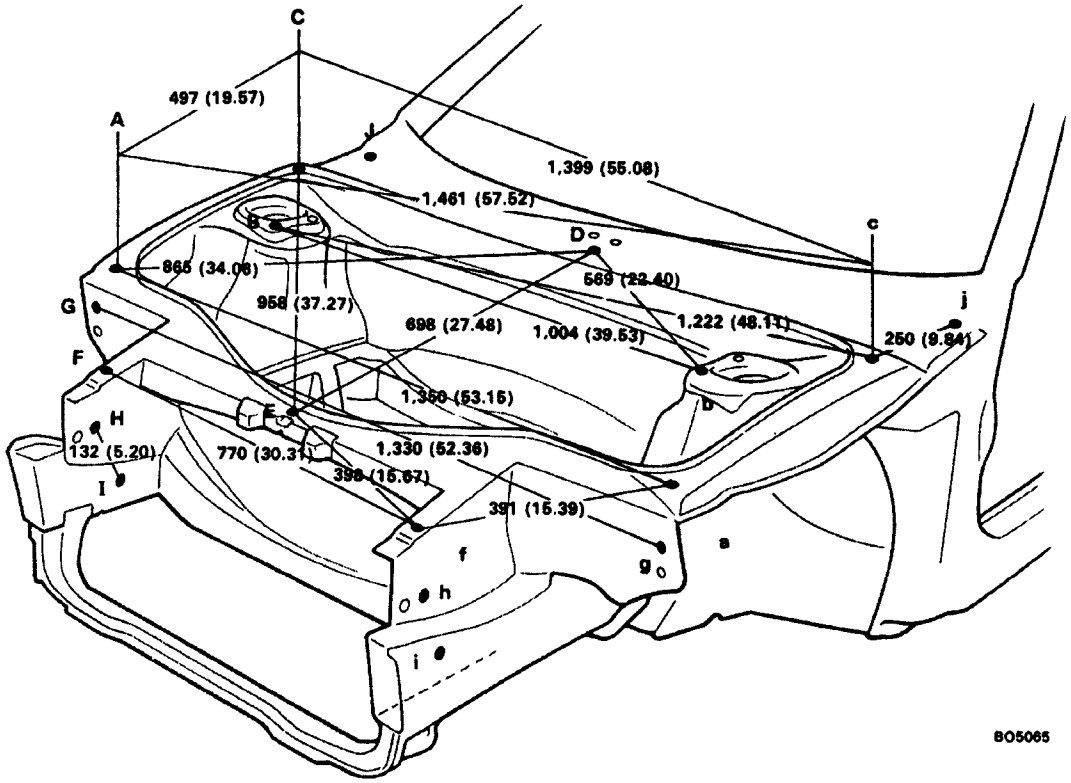

mm(in.)

Symbol	Name	Hole dia.
A, a	Front fender installation nut – front	6 (0.24) nut
B, b	Front suspension brace installation nut	10 (0.39) nut
C, c	Front fender installation nut – rear	6 (0.24) nut
D	Wiper pivot installation hole (center)	7 (0.28)
E	Radiator upper seal installation hole (center)	7 (0.28)
F, f	Radiator upper seal installation hole	7 (0.28)
G, g	Front luggage end panel standard hole	10 (0.39)
H, h	Radiator support standard hole	10 (0.39)
I, i	Front side member standard hole	15 (0.59)
J, j	Hood hinge installation nut – rear	8 (0.31) nut

V00857

UNDER BODY

(Three-Dimensional Distance)

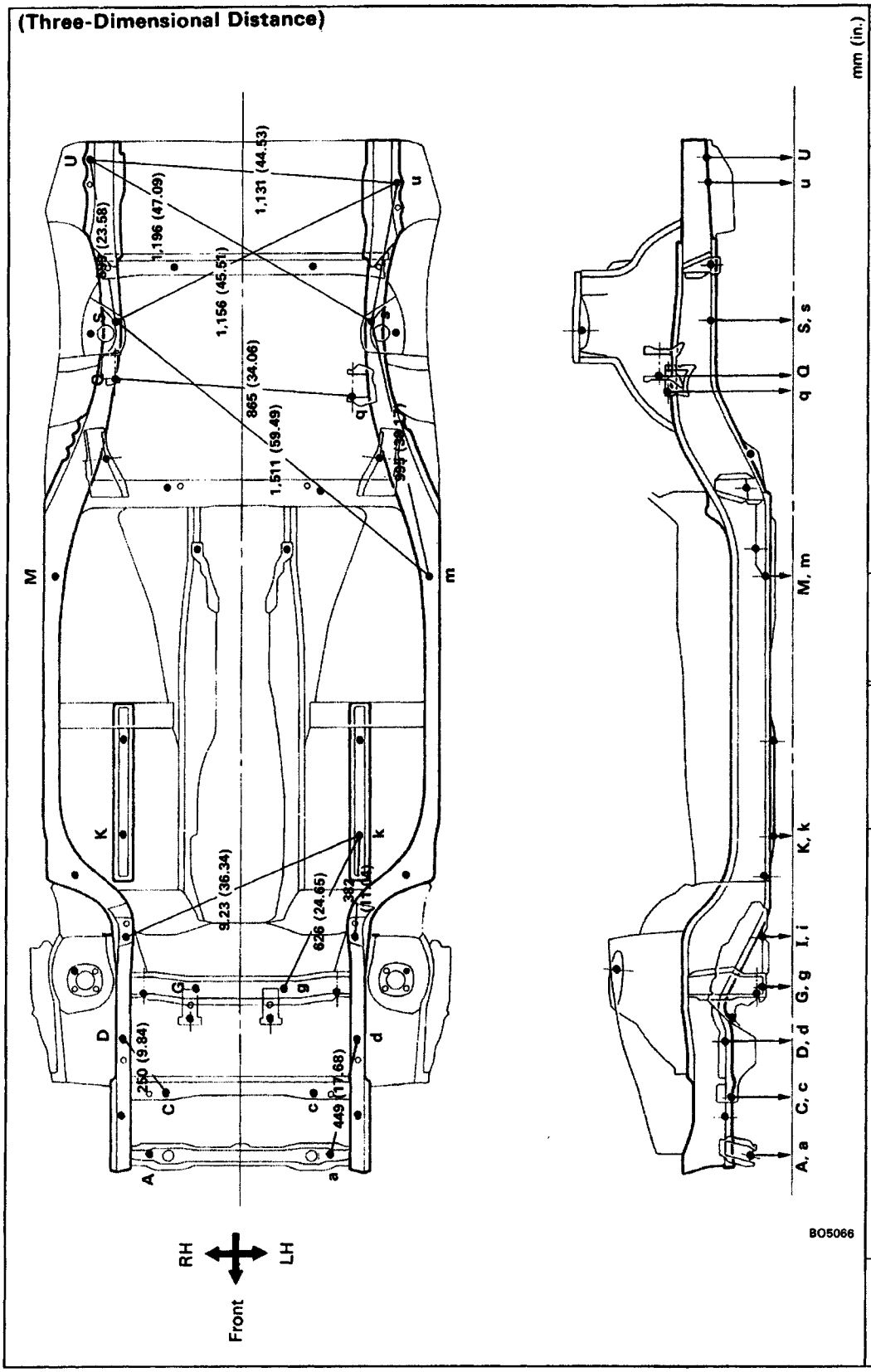

Symbol	Name	Hole dia.
A, a	Front cross member standard hole	10 (0.39)
C, c	Strut bar bracket installation nut-front=inner	10 (0.39)
D, d	Strut bar bracket installation nut-rear=rear	10 (0.39)
G, g	Steering gear box support member standard hole	15 (0.59)
I, i	Stabilizer bar installation nut-front	8 (0.31) nut
K, k	Front floor under reinforcement standard hole	15 (0.59)
M, m	Rear floor side member standard hole	15 (0.59)
Q, q	Engine mounting bracket hole-front	13 (0.51)
S, s	Rear suspension cross member installation nut-front	14 (0.55) nut
U, u	Tail pipe bracket installation nut	8 (0.31) nut

V00858

UNDER BODY(Con'd)

(Three-Dimensional Distance)

mm (in.)

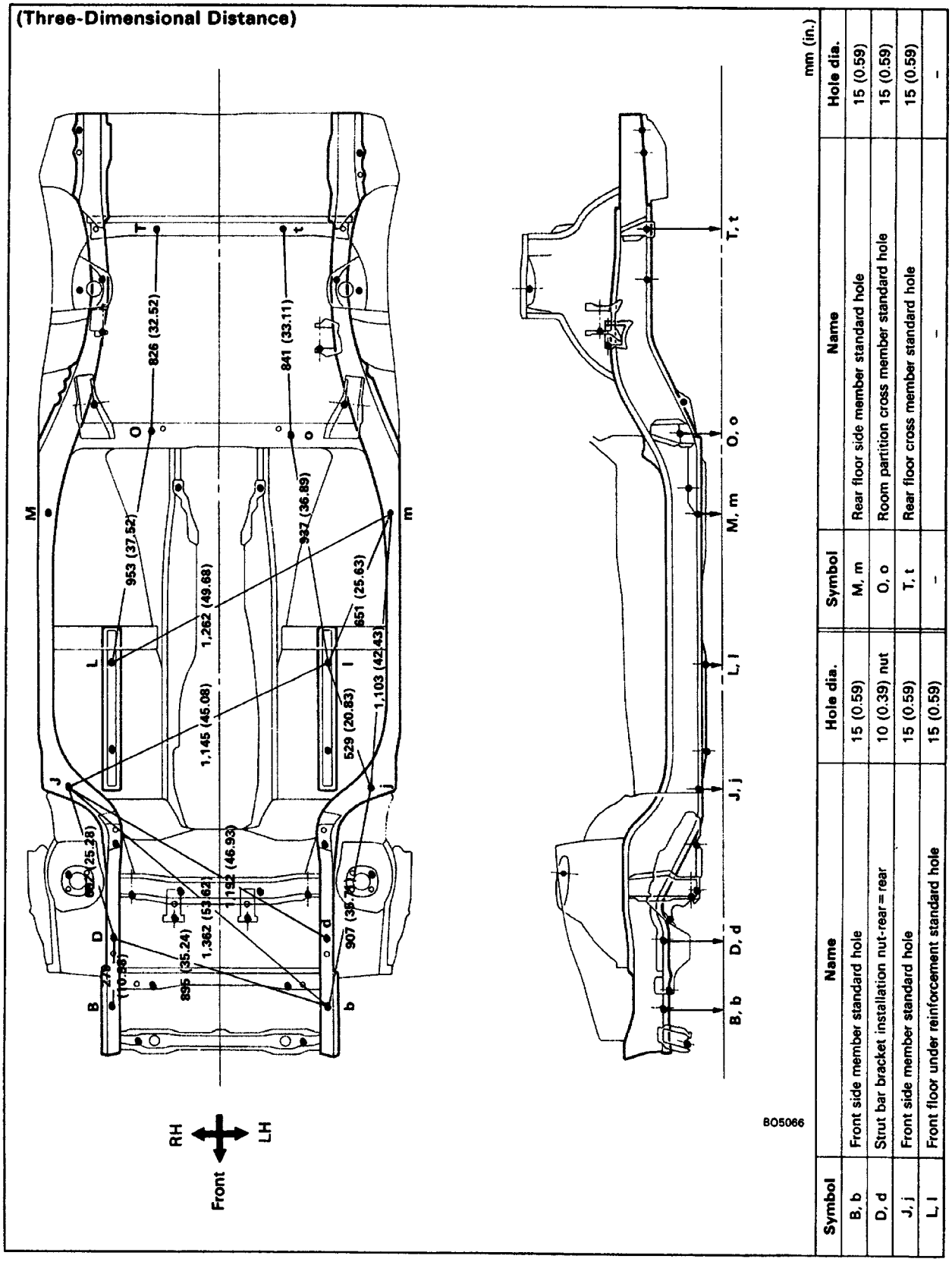

Symbol	Name	Hole dia.
B, b	Front side member standard hole	15 (0.59)
D, d	Strut bar bracket installation nut-rear=rear	10 (0.39) nut
J, j	Front side member standard hole	15 (0.59)
L, l	Front floor under reinforcement standard hole	15 (0.59)

Symbol	Name	Hole dia.
M, m	Rear floor side member standard hole	15 (0.59)
O, o	Room partition cross member standard hole	15 (0.59)
T, t	Rear floor cross member standard hole	15 (0.59)
–	–	–

V00859

UNDER BODY(Con'd)

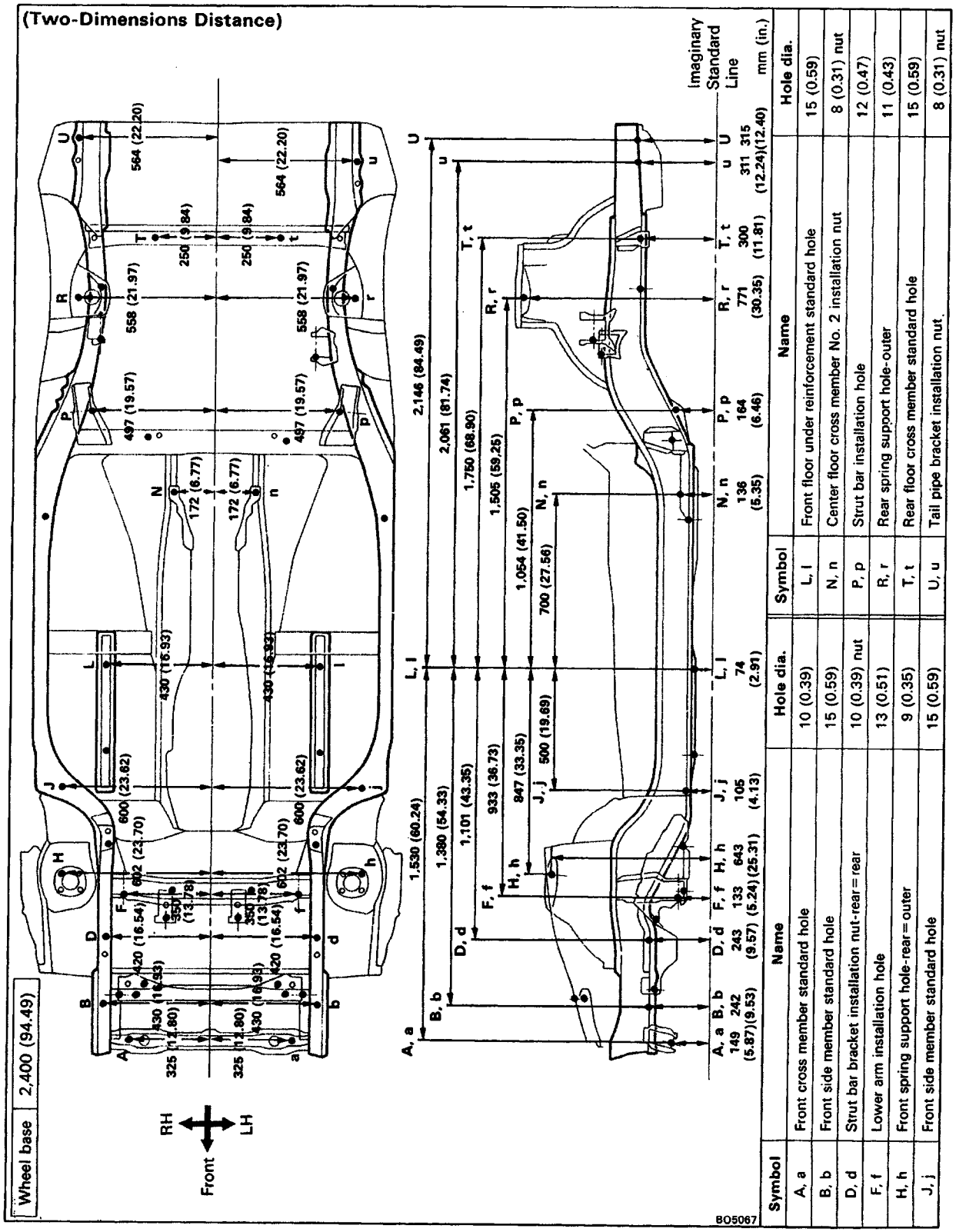

Symbol	Name	Hole dia.
A, a	Front cross member standard hole	10 (0.39)
B, b	Front side member standard hole	15 (0.59)
D, d	Strut bar bracket installation nut-rear=rear	10 (0.39) nut
F, f	Lower arm installation hole	13 (0.51)
H, h	Front spring support hole-rear=outer	9 (0.35)
J, j	Front side member standard hole	15 (0.59)

Symbol	Name	Hole dia.
L, l	Front floor under reinforcement standard hole	15 (0.59)
N, n	Center floor cross member No. 2 installation nut	8 (0.31) nut
P, p	Strut bar installation hole	12 (0.47)
R, r	Rear spring support hole-outer	11 (0.43)
T, t	Rear floor cross member standard hole	15 (0.59)
U, u	Tail pipe bracket installation nut	8 (0.31) nut

V00860

UNDER BODY(Con'd)

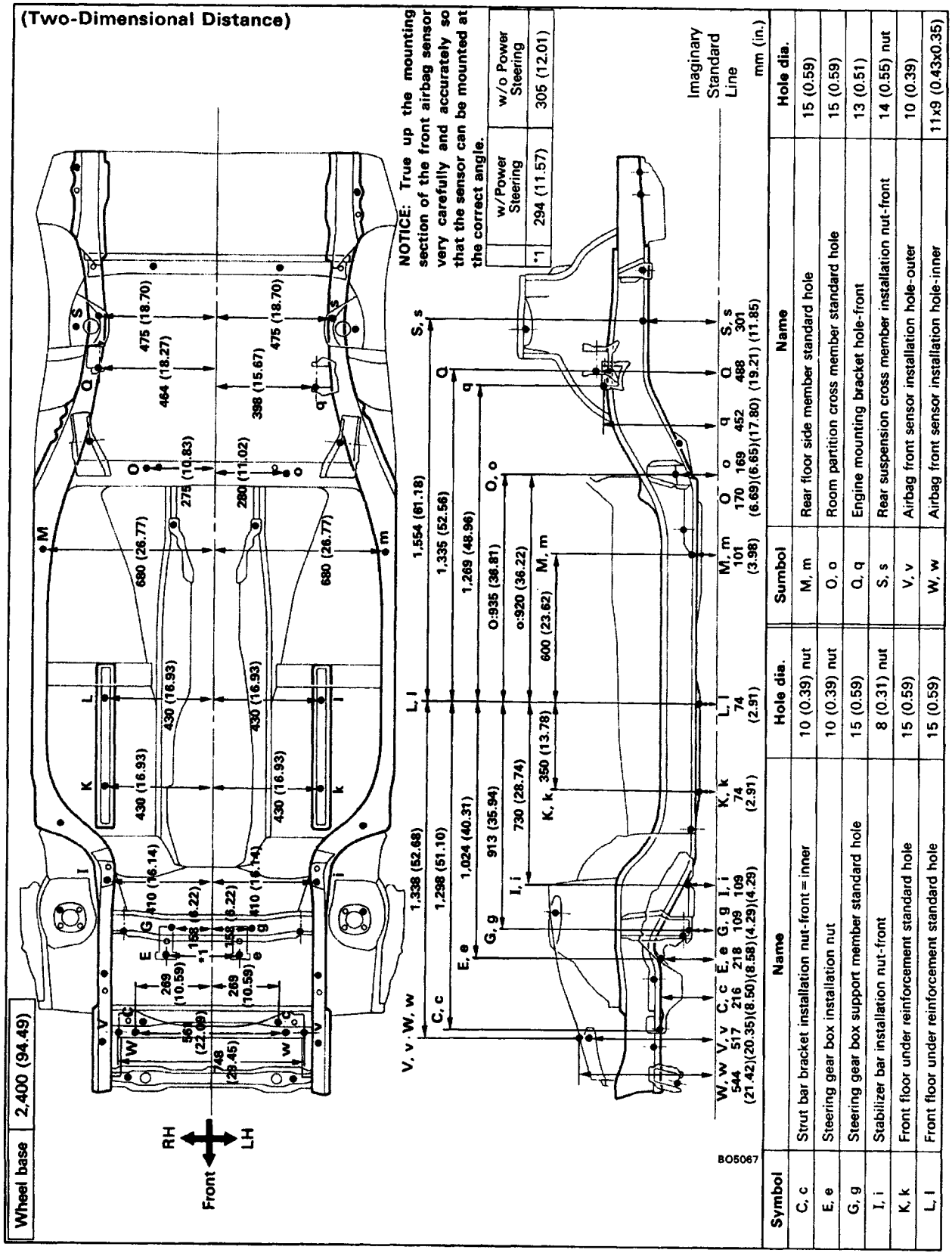

Symbol	Name	Hole dia.	Symbol	Name	Hole dia.
C, c	Strut bar bracket installation nut-front = inner	10 (0.39) nut	M, m	Rear floor side member standard hole	15 (0.59)
E, e	Steering gear box installation nut	10 (0.39) nut	O, o	Room partition cross member standard hole	15 (0.59)
G, g	Steering gear box support member standard hole	15 (0.59)	Q, q	Engine mounting bracket hole-front	13 (0.51)
I, i	Stabilizer bar installation nut-front	8 (0.31) nut	S, s	Rear suspension cross member installation nut-front	14 (0.55) nut
K, k	Front floor under reinforcement standard hole	15 (0.59)	V, v	Airbag front sensor installation hole-outer	10 (0.39)
L, l	Front floor under reinforcement standard hole	15 (0.59)	W, w	Airbag front sensor installation hole-inner	11x9 (0.43x0.35)

V00861

BODY OPNING AREAS
(Side View: w/T–Bar Roof)

(Three-Dimensional Distance)

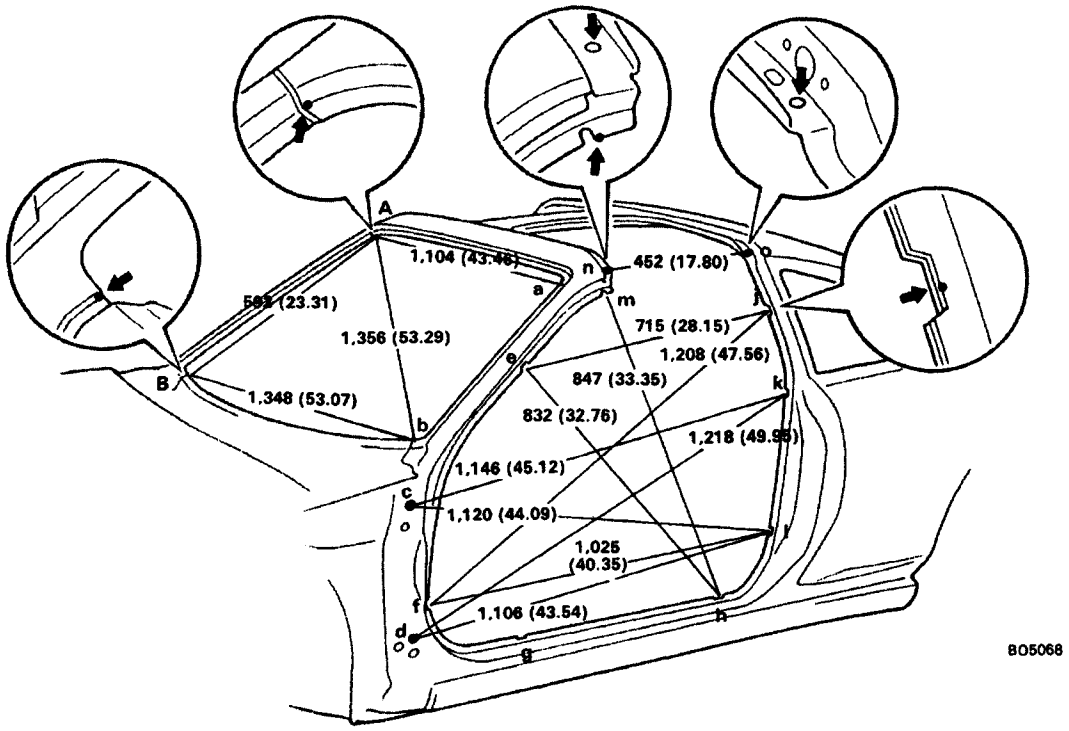

Vehicle Dimensions Left ↔ Right

E-e	F-f	G-g	H-h	J-j	K-k	L-l	M-m	N-n	O-o
1,253 (49.33)	1,402 (55.02)	1,444 (56.85)	1,444 (56.85)	1,233 (48.54)	1,378 (54.25)	1,412 (55.59)	1,101 (43.35)	1,039 (40.91)	1,065 (41.93)

HINT: For symbols, capital letters indicate right side of vehicle, small letters indicate left side of vehicle (Seen for rear).

E-g or e-G	E-h or e-H	E-j or e-J	F-g or f-G	F-l or f-L	G-h or g-H	G-j or g-J	H-j or h-J	H-k or h-K	H-m or h-M	J-l or j-L	J-m	J-M	N-o or n-O
1,510 (59.45)	1,581 (62.24)	1,434 (56.46)	1,455 (57.28)	1,741 (68.54)	1,545 (60.83)	1,713 (67.44)	1,540 (60.63)	1,515 (59.65)	1,519 (59.80)	1,433 (56.42)	1,258 (49.53)	1,257 (49.49)	1,145 (45.08)

mm (in.)

Symbol	Name	Hole dia.
A, a	Roof panel/Front body pillar adjoining portion	–
B, b	Front body pillar/Cowl panel adjoining portion	–
C, c	Front door hinge installation nut	8 (0.31) nut
D, d	Front door hinge installation nut	8 (0.31) nut
E, e	Front body pillar assembly mark	–
F, f	Front body pillar assembly mark	–
G, g	Rocker panel assembly mark	–
H, h	Rocker panel assembly mark	–
J, j	Quarter panel assembly mark	–
K, k	Quarter panel assembly mark	–
L, l	Quarter panel assembly mark	–
M, m	Front body pillar cut-out portion	–
N, n	Removable roof weatherstrip installation hole	7 (0.28)
O, o	Removable roof weatherstrip installation hole	7 (0.28)

V00862

BODY OPNING AREAS
(Side View: w/oT–Bar Roof)

(Three-Dimensional Distance)

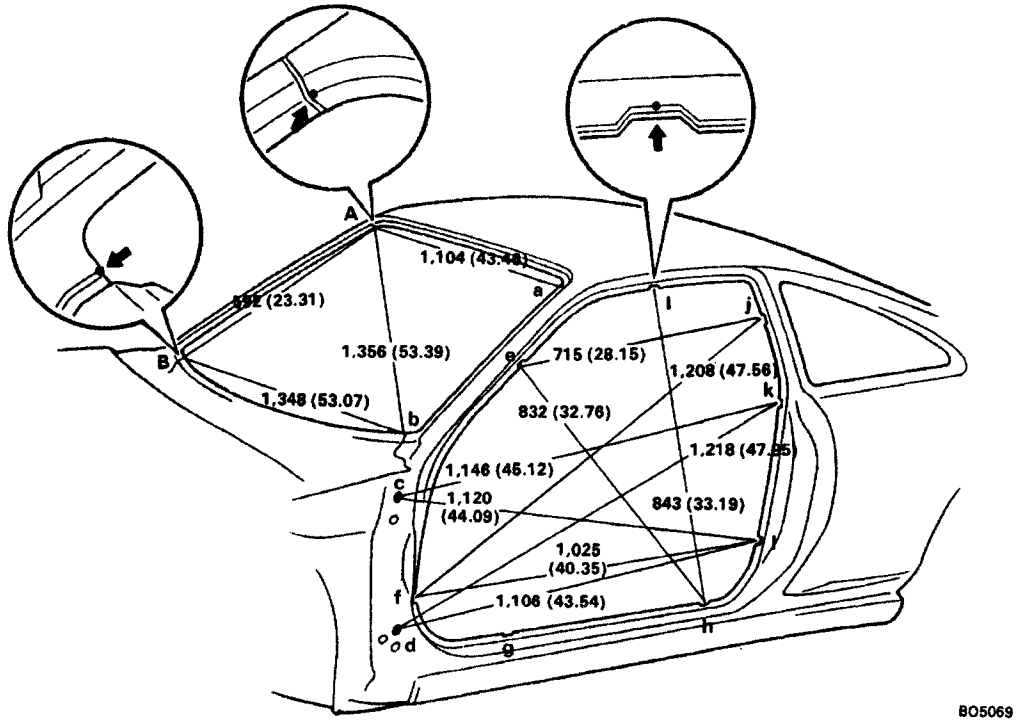

Vehicle Dimensions Left ↔ Right

E-e	F-f	G-g	H-h	I-i	J-j	K-k	L-l
1,253 (49.33)	1,402 (55.20)	1,444 (56.85)	1,444 (56.85)	1,078 (42.44)	1,233 (48.54)	1,378 (54.25)	1,412 (55.59)

HINT: For symbols, capital letters indicate right side of vehicle, small letters indicate left side of vehicle (See for rear).

E-g or e-G	E-h or e-H	E-j or e-J	E-l or e-L	F-g or f-G	F-l or f-L	G-h or g-H	G-j or g-J	H-i or h-I	H-j or h-J	H-k or h-K	J-l or j-L
1,510 (59.45)	1,581 (62.24)	1,434 (56.46)	1,579 (62.17)	1,455 (57.28)	1,741 (68.54)	1,545 (60.83)	1,713 (67.44)	1,506 (59.29)	1,540 (60.23)	1,515 (59.65)	1,433 (56.42)

mm (in.)

Symbol	Name	Hole dia.
A, a	Roof panel/Front body pillar adjoining portion	–
B, b	Front body pillar/Cowl panel adjoining portion	–
C, c	Front door hinge installation nut	8 (0.31) nut
D, d	Front door hinge installation nut	8 (0.31) nut
E, e	Front body pillar assembly mark	–
F, f	Front body pillar assembly mark	–
G, g	Rocker panel assembly mark	–
H, h	Rocker panel assembly mark	–
I, i	Roof side rail assembly mark	–
J, j	Quarter panel assembly mark	–
K, k	Quarter panel assembly mark	–
L, l	Quarter panel assembly mark	–

V00863

BODY OPNING AREA(Rear View)

(Three-Dimensional Distance)

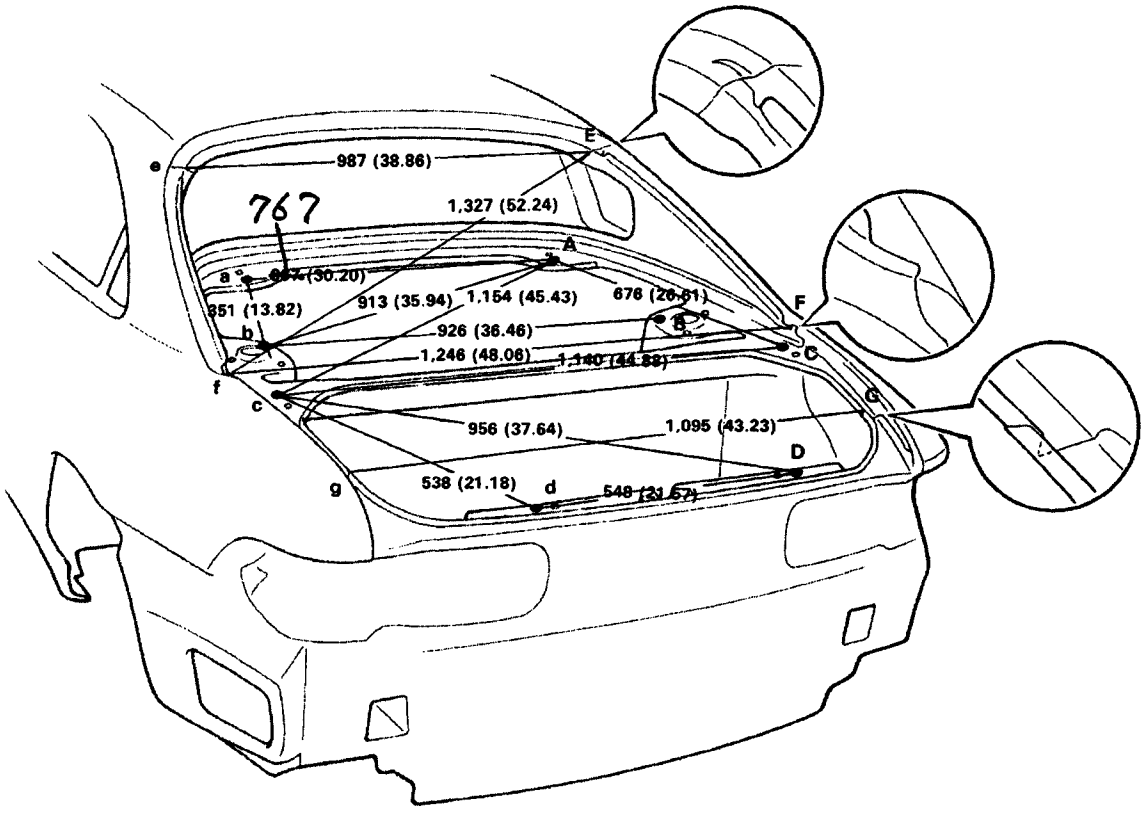

BO5070

mm (in.)

Symbol	Name	Hole dia.
A, a	Engine hood hinge installation hole-rear	12 (0.47)
B, b	Rear sping support hole-inner=front	11 (0.43)
C, c	Luggage door hinge installation hole-front	9 (0.35)
D, d	Luggage finish plate installation hole	8.5 (0.335)
E, e	Roof panel/Roof side panel adjoining portion	–
F, f	Roof side panel/Quarter panel adjoining portion	–
G, g	Luggage opening trough/Quarter panel adjoining portion	–

V00864

BODY OUTSIDE MOULDING

B00BK–01

COMPONENTS

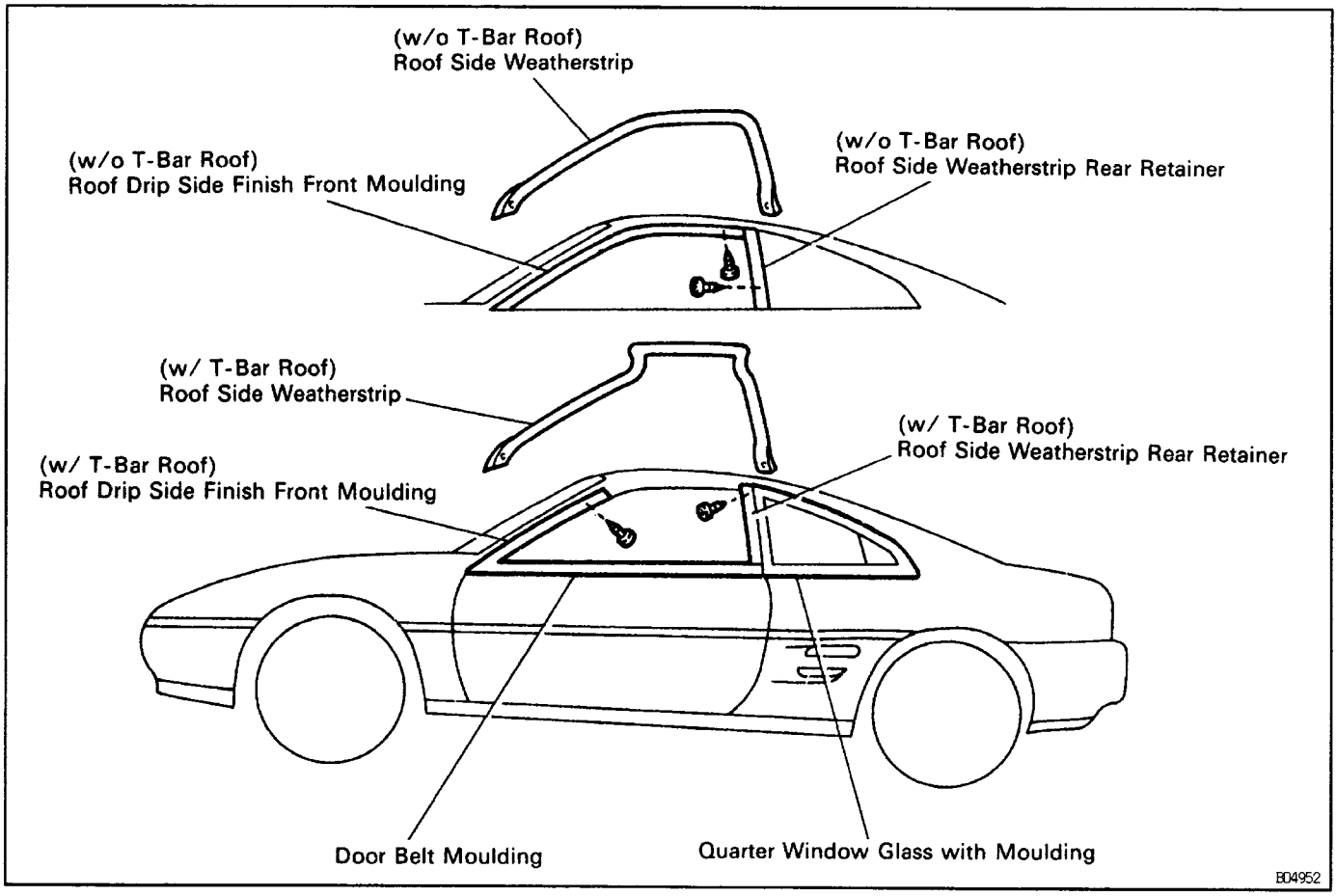

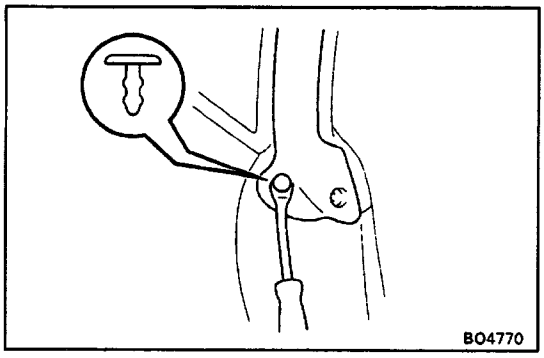

B00BL–01

ROOF DRIP MOULDING REMOVAL

1. REMOVE ROOF SIDE WEATHERSTRIP

(a) Using the clip remover, remove four clips from the weatherstrip.

(b) Remove the weatherstrip from the moulding and the retainer.

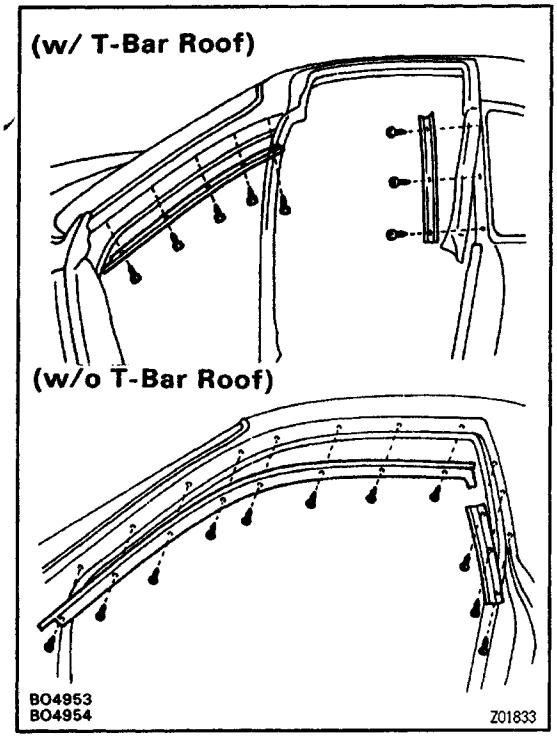

2. REMOVE ROOF DRIP SIDE FINISH FRONT MOU–LDING

(w/ T –Bar Roof)

Remove five screws and the moulding.

(w/o T – Ba r Roof)

Remove eight screws and the moulding.

3. REMOVE ROOF SIDE WEATHERSTRIP REAR RE–TAINER

Remove three screws and the retainer.

1001M–01

ROOF DRIP MOULDING INSTALLATION

1. INSTALL ROOF SIDE WEATHERSTRIP REAR RE–TAINER

Install the retainer with three screws.

2. INSTALL ROOF DRIP SIDE FINISH FRONT MOU–LDING

(w/ T– Bar Roof)

Install the moulding with five screws.

(w/o T–Bar Roof)

Install the moulding with eight screws.

3. CLEAN BODY

Wipe off any adhesive left on the body with cleaner. ^

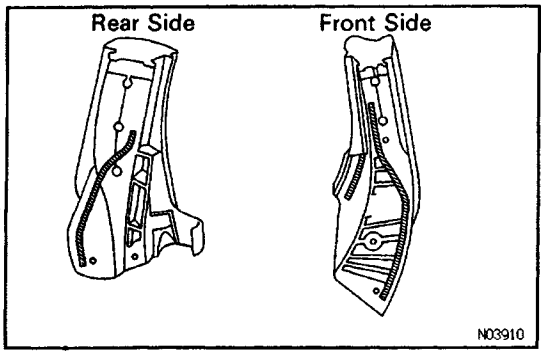

4. INSTALL ROOF SIDE WEATHERSTRIP

(a) Install the seal to the weatherstrip as shown.

(b) Install the weather strip to the moulding and the re–tainer.

(c) Install four clips.

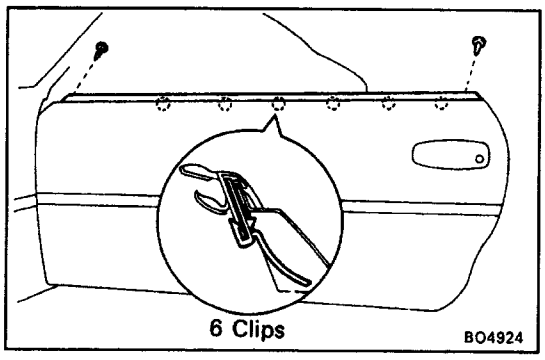

DOOR BELT MOULDING REMOVAL

B00BN–01

1. REMOVE FRONT DOOR COMPONENTS PARTS:
   (See steps 1, 2, 3, 4, 5, 6, 11, 12 and 14 on pages BO–16 to BO–19)
2. REMOVE DOOR BELT MOULDING
   (See step 15 on page BO– 19)

DOOR BELT MOULDING INSTALLATION

1. INSTALL DOOR BELT MOULDING
   (See step 12 on page BO–23)
2. INSTALL FRONT DOOR COMPONENT PARTS:
   (See steps 13, 15, 16, 24, 25, 26, 27, 28 and 29 on pages BO–23 to BO–27)

QUARTER WINDOW GLASS WITH MOULDING REMOVAL

B00BQ–01

(See steps 1 to 10 on pages BO–47 to BO–49)

QUARTER WINDOW GLASS WITH MOULDING INSTALLATION

B00BR–01

(See steps 1 to 12 on pages BO–49 2o BO–50)

FRONT BUMPER

BO0BS–01

COMPONENTS

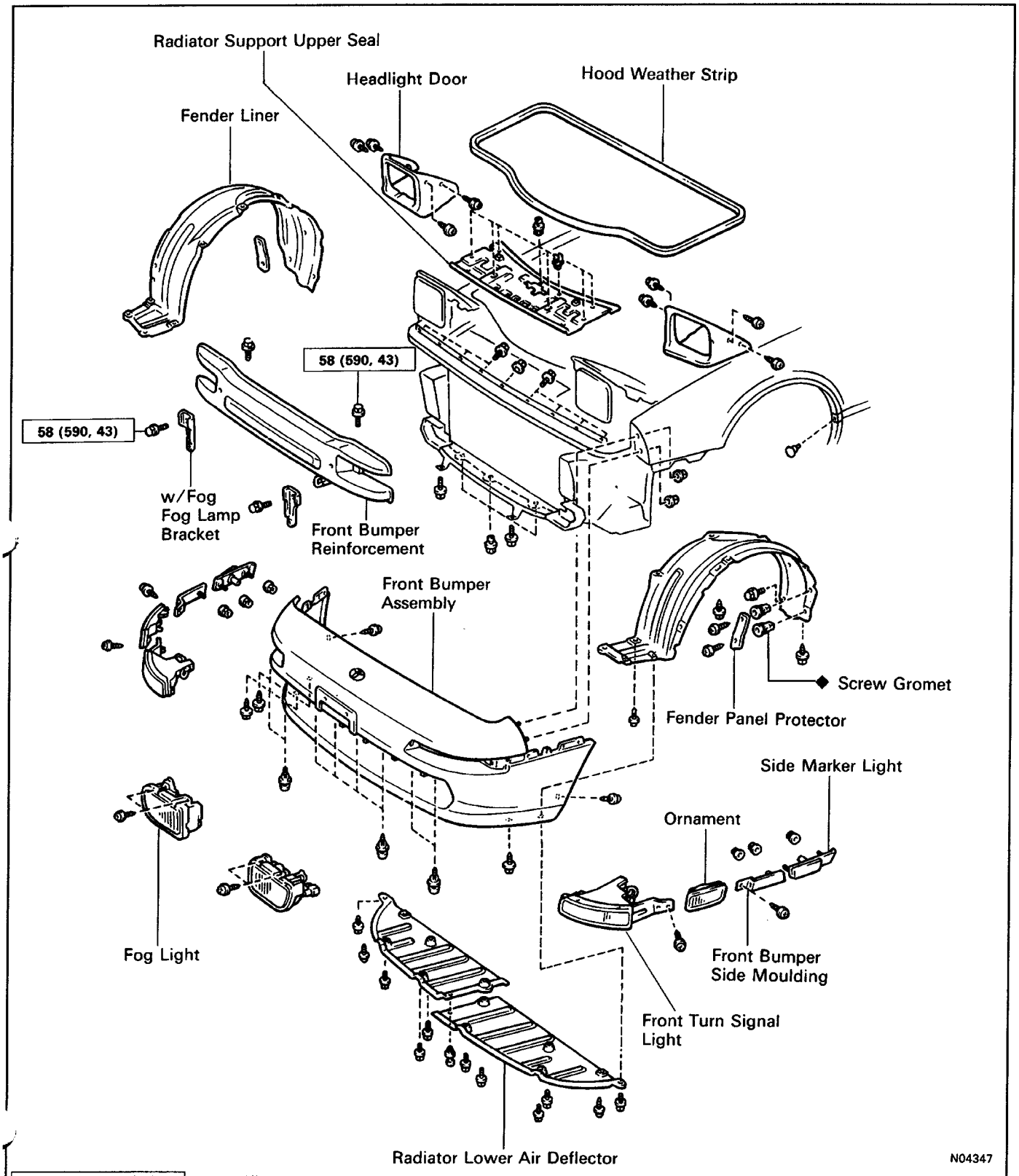

N·m (kgf·cm, ft·lbf) : Specified torque

◆ Non-reusable part

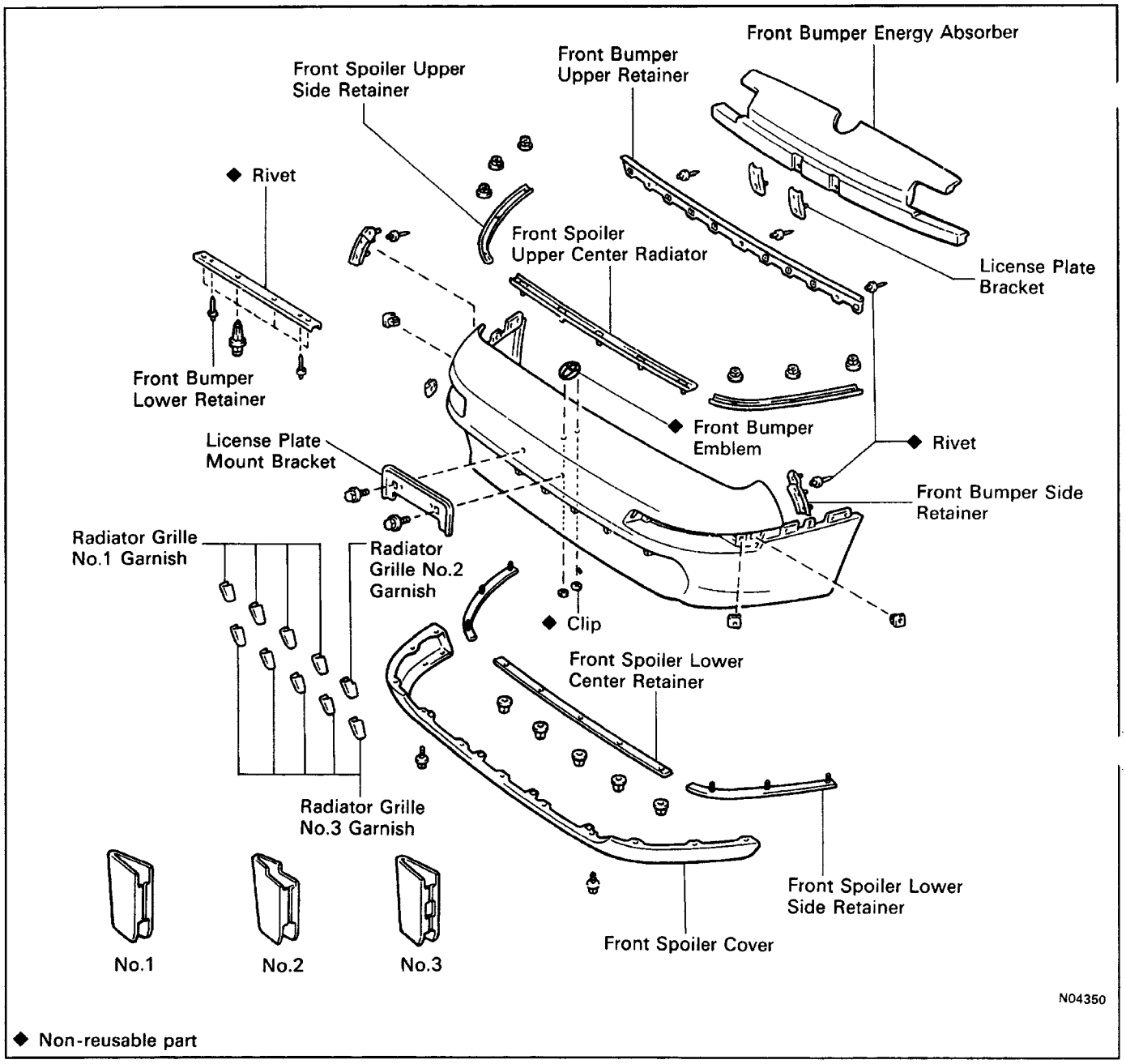

◆ Non-reusable part

FRONT DOOR

BO0B9–01

COMPONENTS

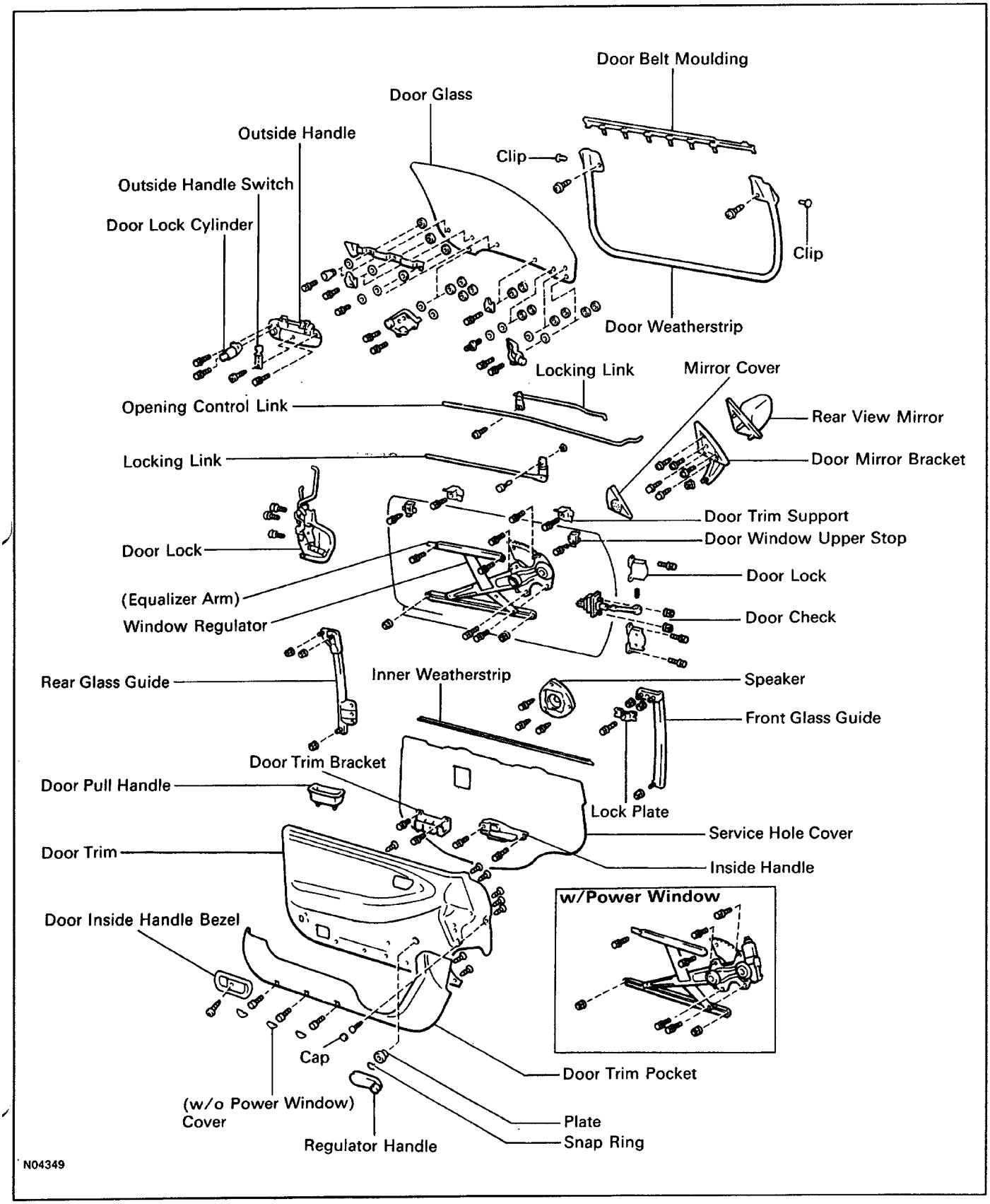

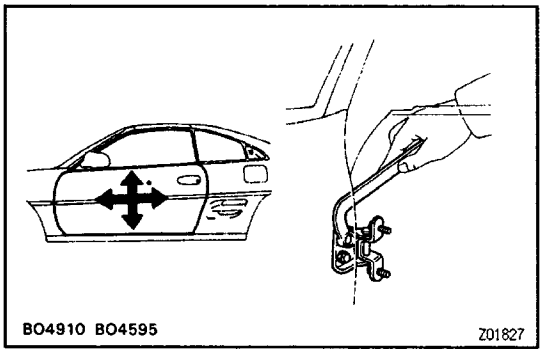

BO0BA–01

FRONT DOOR ADJUSTMENT

1. ADJUST DOOR IN FORWARD/ REARWARD AND VERTICAL DIRECTIONS

Using SST, adjust the door by loosening the body side hinge bolts.

SST 09812 – 00010

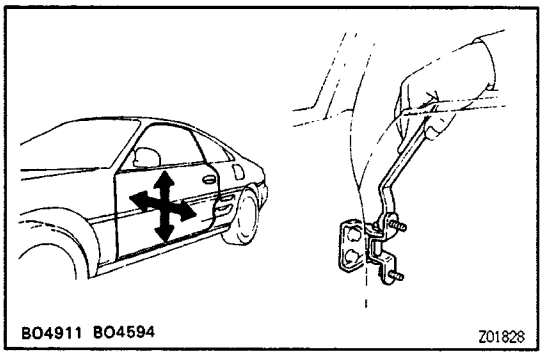

2. ADJUST DOOR IN LEFT/RIGHT AND VERTICAL DIRECTIONS

Loosen the door side hinge bolts to adjust.

HINT: Substitute the bolt for the centering bolt. (See page BO–12)

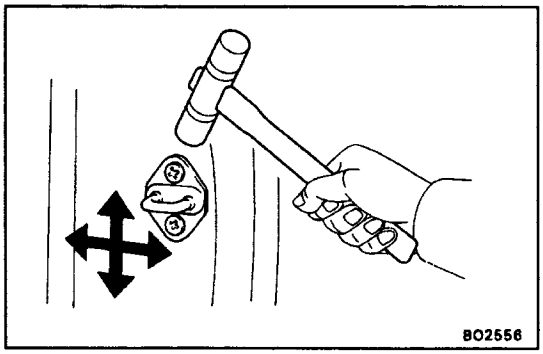

3. ADJUST DOOR LOCK STRIKER

(a) Check that the door fit and door lock linkages are adjusted correctly.

(b) Loosen the striker mounting screws to adjust.

(c) Using a plastic hammer, tap the striker to adjust it.

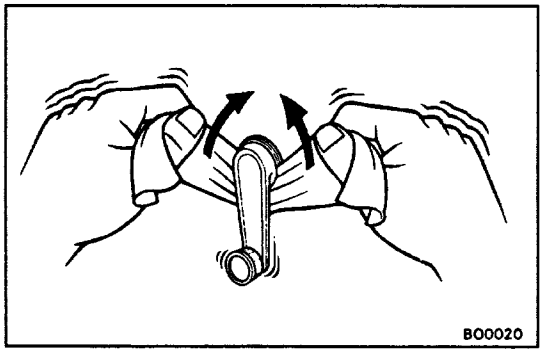

BO0BB–01

FRONT DOOR DISASSEMBLY

(See page BO–15)

1. (w/o Power Window)
REMOVE REGULATOR HANDLE

Pull off the snap ring with a shop rage and remove the regulator handle and plate.

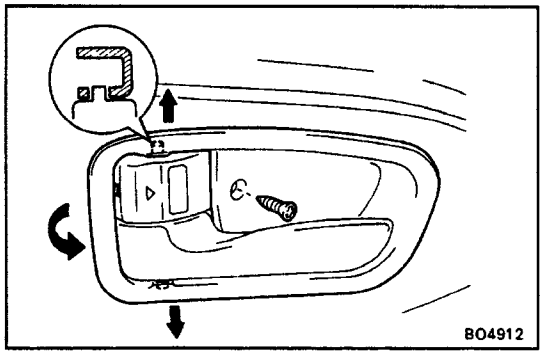

2. REMOVE DOOR INSIDE HANDLE BEZEL

Remove the screw and pull the inside handle bezel.

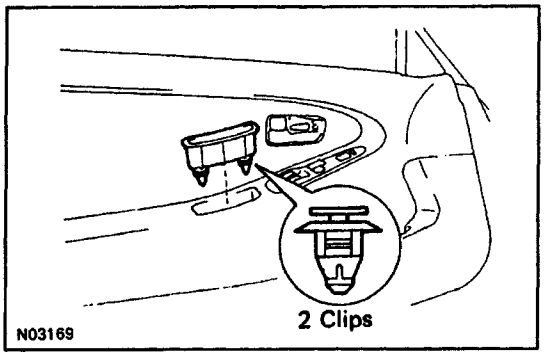

3. REMOVE DOOR PULL HANDLE

Remove the pull handle by pulling.

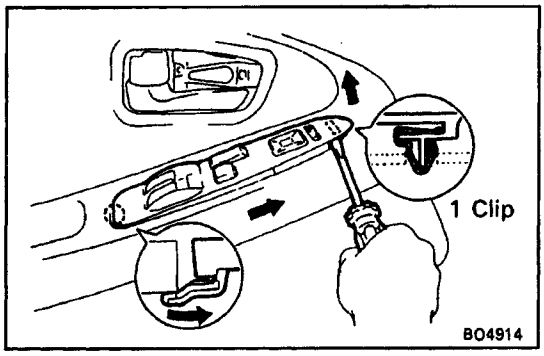

4. (w/ Power Window)
REMOVE ARMREST PEDAL

(a) Insert the screwdriver between the door trim and the armrest panel to pry out.
HINT: Tape the screwdriver tip before use.
(b) Slide the armrest panel forward to remove it, then disconnect the connectors.

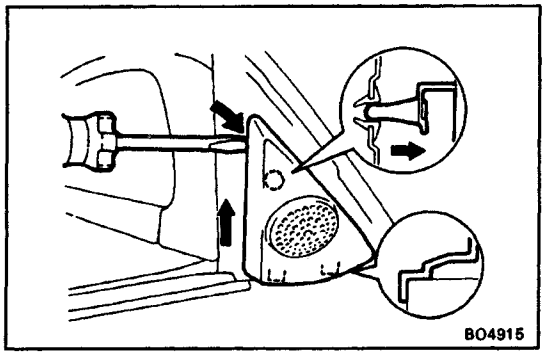

5. REMOVE MIRROR COVER

(a) Insert the screwdriver between the cover and the bracket to pry out.
HINT: Tape the screwdriver tip before use.
(b) Pull the cover upward to remove it.

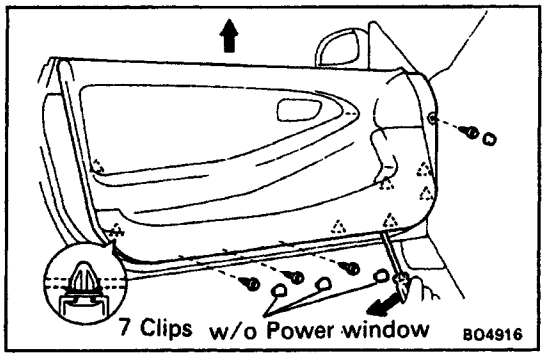

6. REMOVE DOOR TRIM

HINT: Tape the screwdriver tip before use.
(a) Using the screwdriver, remove the screw cap.
(b) (w/o Power Window)
Using the screwdriver, remove three covers.
(c) Remove four bolts.
(d) Insert the screwdriver between the door and the door trim to pry out.
(e) Pull the trim upward to remove it.
(f) (w. Door Courtesy Light)
Disconnect the connector.
(g) Remove eight screws and the door trim pocket from the door trim.
(h) Remove inner weatherstrip from the door trim.

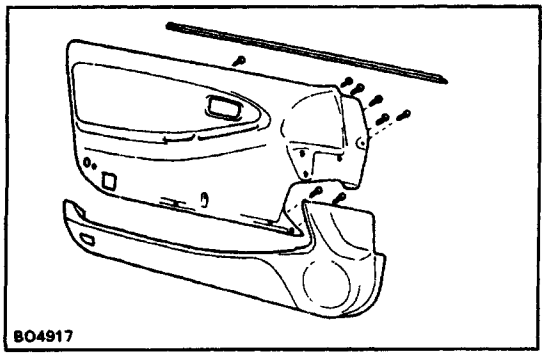

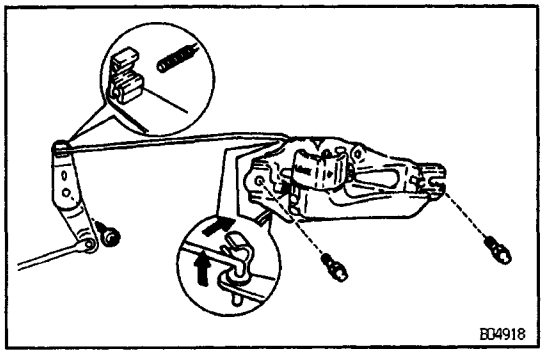

7. REMOVE DOOR INSIDE HANDLE

(a) Remove two bolts.

(b) Disconnect two links from the inside handle.

8. REMOVE LOCKING LINK

Remove the screw and the locking link.

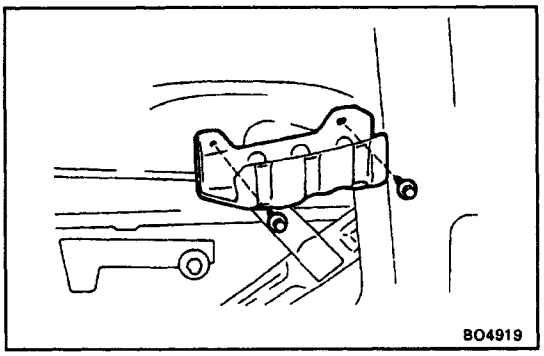

9. REMOVE DOOR TRIM BRACKET

Remove two bolts and the bracket.

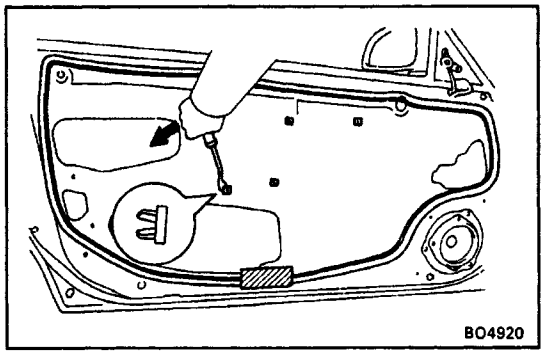

10. REMOVE SERVICE HOLE COVER

(a) Using the clip remover, remove four screw grommets.

(b) Remove service hole cover.

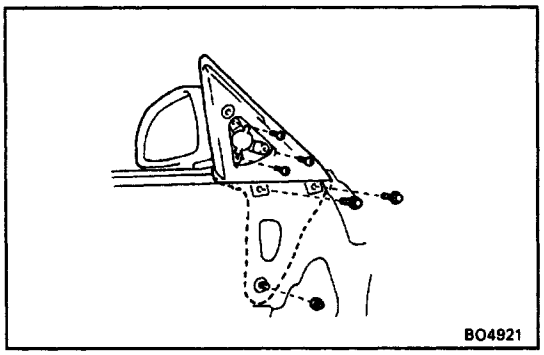

11. REMOVE REAR TRIM MIRROR

(a) (w/ Remote Control Mirror)
Disconnect the connector.

(b) Remove three screws and the mirror.

12. REMOVE DOOR MIRROR BRACKET

(a) Remove two bolts and the nut.

(b) Pull the bracket to remove it.

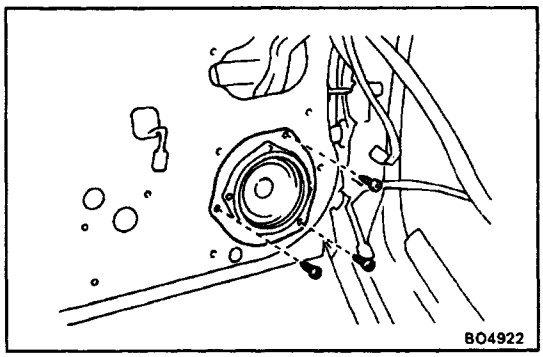

13. REMOVE SPEAKER

Remove three screws and the speaker, then disconnect the connector.

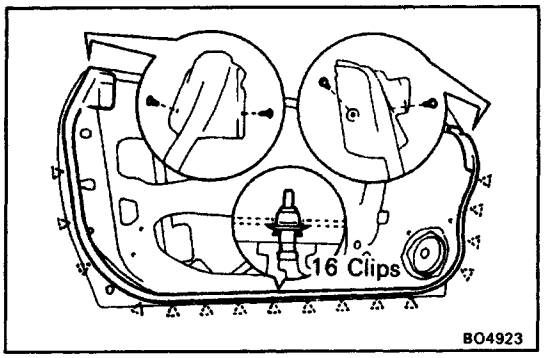

14. REMOVE DOOR WEATHERSTRIP

(a) Remove two screws and two clips.

(b) While pulling the weatherstrip by hand, remove the clips using the clip remover.

HINT: Do not pull strongly on the weather strip as it may tear.

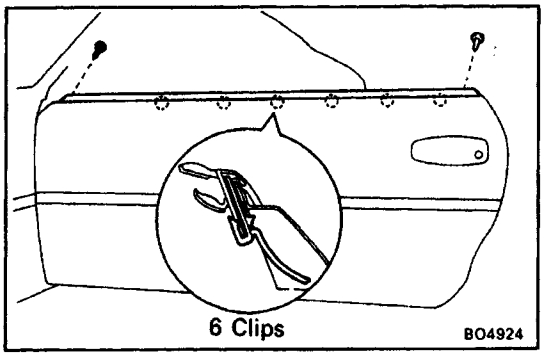

15. REMOVE DOOR BELT MOULDING

(a) Remove the screw from the front edge of the mou–lding.

(b) Remove the clip from the rear edge of the moulding.

(c) Pry out the clips from the edge of the moulding and remove the door belt moulding.

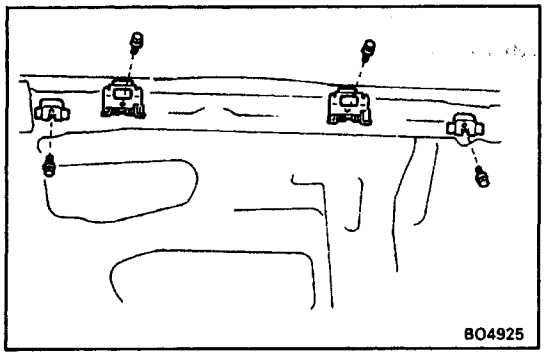

16. REMOVE DOOR WINDOW UPPER STOP

Remove two bolts and two upper stops.

17. REMOVE DOOR TRIM SUPPORT

Remove two bolts and two trim supports.

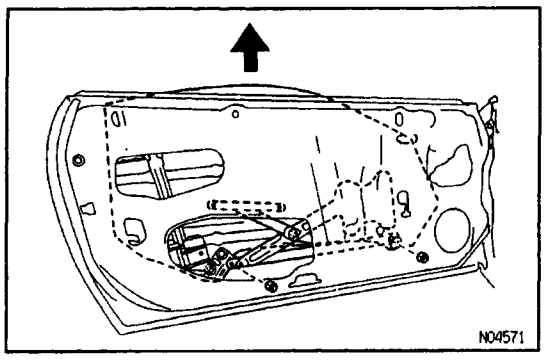

18. REMOVE DOOR GLASS

HINT: Insert a shop rag inside the panel to prevent scratching the glass.

(a) Remove two glass mounting nuts.

(b) Remove the door glass by pulling it upward.

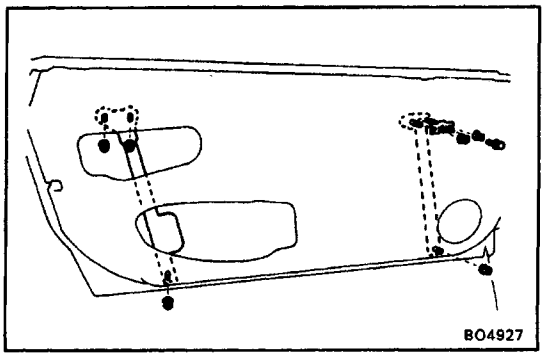

19. REMOVE FRONT GLASS GUIDE

(a) Remove the bolt and the lock plate.

(b) Remove three nuts from the guide.

(c) Pull out the guide upward from the panel.

20. REMOVE REAR GLASS GUIDE

(a) Remove three nuts from the guide.

(b) Pull out the guide upward from the panel.

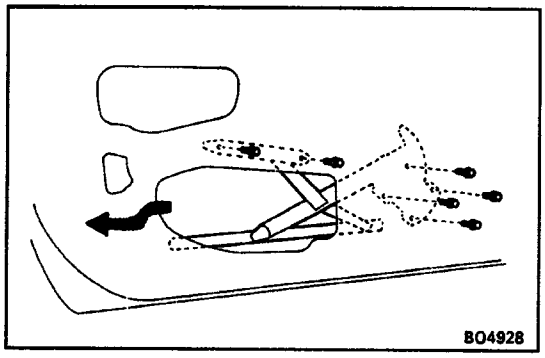

21. REMOVE WINDOW REGULATOR

(a) (w/ Power Window)
Disconnect the connector.
(b) Remove two equalizer arm bracket mounting bolts.
(c) Remove four regulator mounting bolts.
(d) Remove the regulator through the service hole.

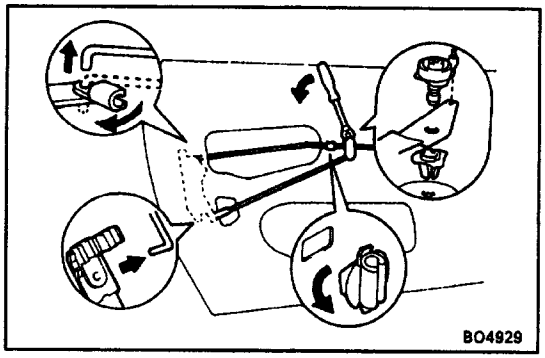

22. REMOVE LOCKING AND OPENING CONTROL LINK

(a) Disconnect two links from the door lock.
(b) Using the clip remover, remove the intermediate clip.
(c) Remove the locking and opening control link.
(d) Turn the clip, then pull it out.

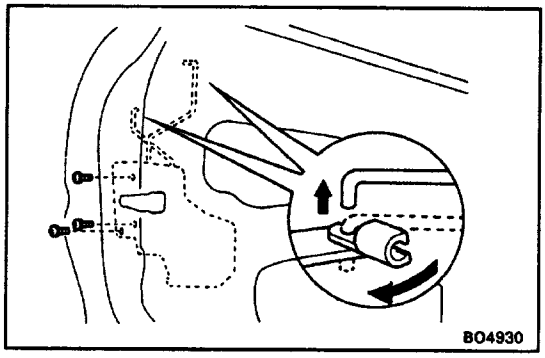

23. REMOVE DOOR LOCK

(a) Disconnect two links from the outside handle and the door lock cylinder.
(b) (w/ Power Door Lock)
Disconnect the connector
(c) Remove three screws
(d) Remove the door lock through the service hole

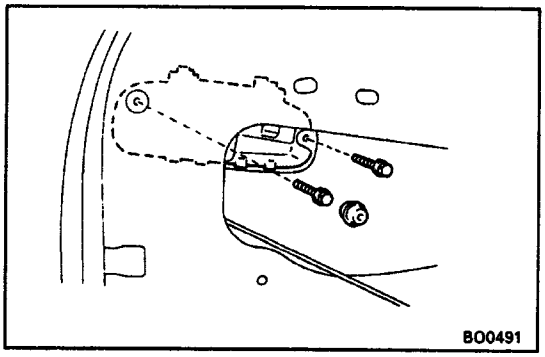

24. REMOVE OUTSIDE HANDLE WITH DOOR LOCK CYLINDER

(a) Remove the cushion.
(b) Remove two bolts and outside handle with the lock cylinder.
(c) (w/ Power Door Lock)
Disconnect the connector.
(d) (w/ Door Key Cylinder Illumination Light)
Disconnect the connector–.

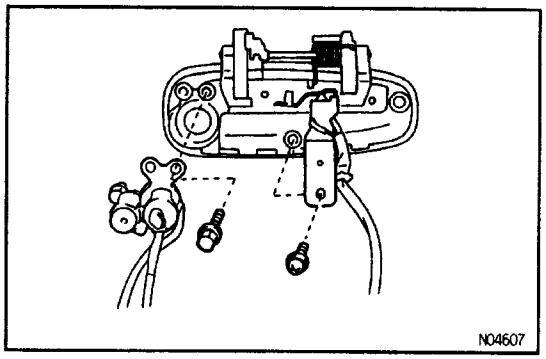

25. REMOVE DOOR LOCK CYLINDER

(a) (w/ Door Key Cylinder Illumination Light)
Remove the bolt and the outside handle switch from the outside handle.
(b) Remove the bolt and the lock cylinder from the out–side handle.

BO0BC–01

GLASS REPLACEMENT

REMOVE FOLLOWING PARTS

(a) Door glass brackets
(b) Stabilizers
(c) Stopper
(d) Door glass plate

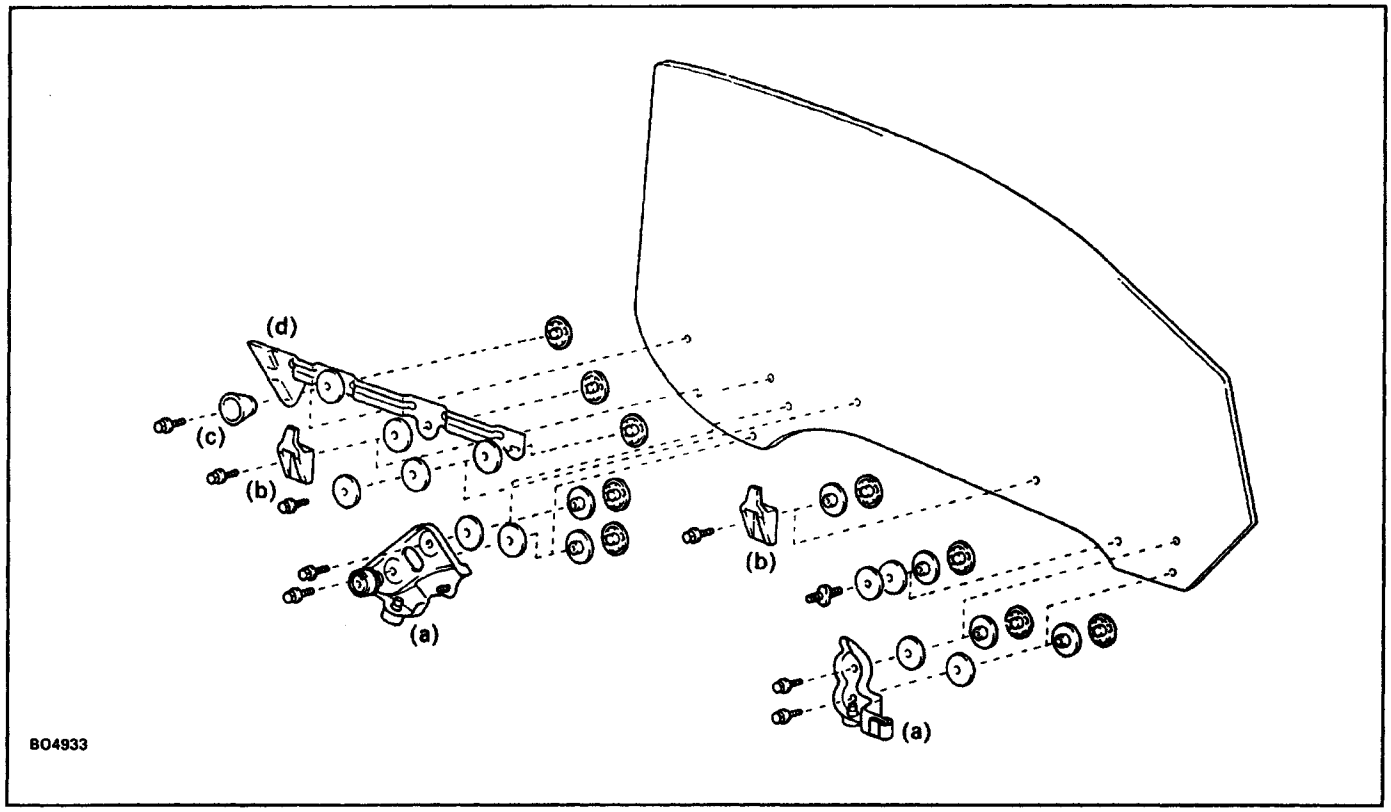

BO0BD–01

FRONT DOOR ASSEMBLY

(See page BO–15)

1. BEFORE INSTALLING PARTS, COAT THEM WITH MP GREASE

(a) Apply MP grease to the sliding surface and gears of the window regulator.
NOTICE: Do not apply MP grease to the spring of the window regulator.

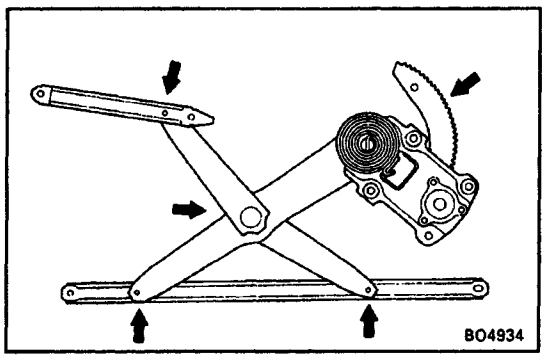

(b) Apply MP grease to the sliding surface of the door lock.

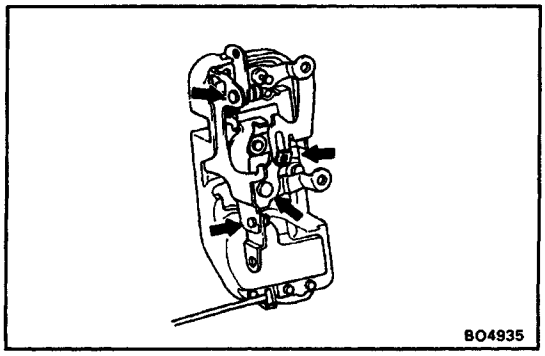

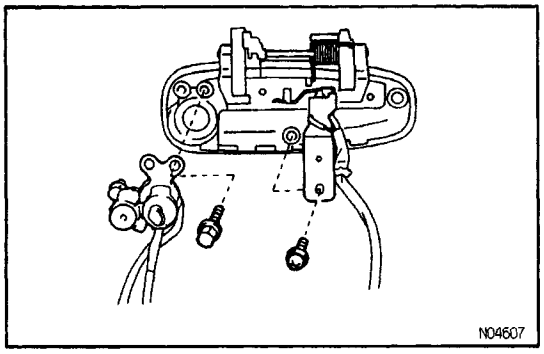

2. INSTALL LOCK CYLINDER

(a) Insert the lock cylinder with the bolt to the outside handle.

(b) (w/ Door Key Cylinder Illumination Light)
Install the outside handle switch with the bolt to the outside handle.

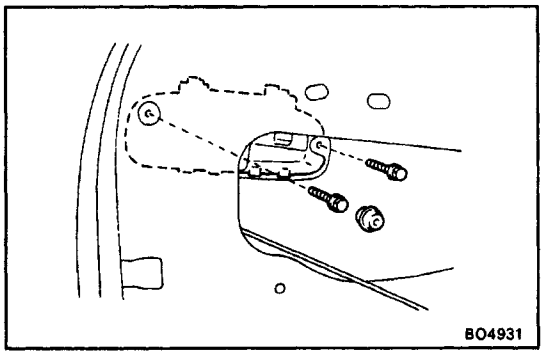

3. INSTALL OUTSIDE HANDLE WITH DOOR LOCK CYLINDER

(a) Install the outside handle with lock cylinder with two bolts.

(b) Install the cushion.

(c) (w/ Power Door Lock)
Connect the connector.

(d) (w/ Door Key Cylinder Illumination Light)
Connect the connector.

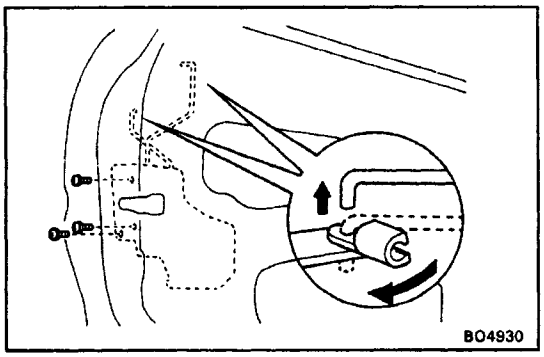

4. INSTALL DOOR LOCK

(a) Install the door lock with three screws.

(b) (w/ Power Door Lock)
Connect the connector.

(c) Connect two links to the outside handle and the door lock cylinder.

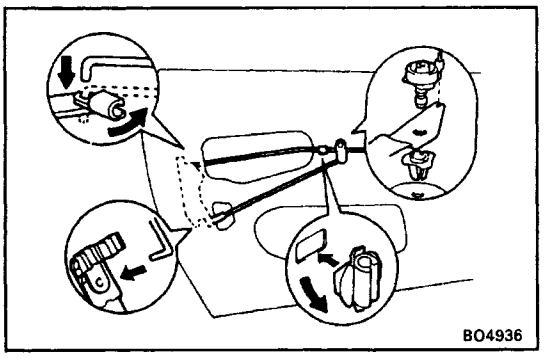

5. INSTALL LOCKING AND OPENING CONTROL LINK

(a) Install the clips, and the locking and opening control link.

(b) Connect two links to the door lock.

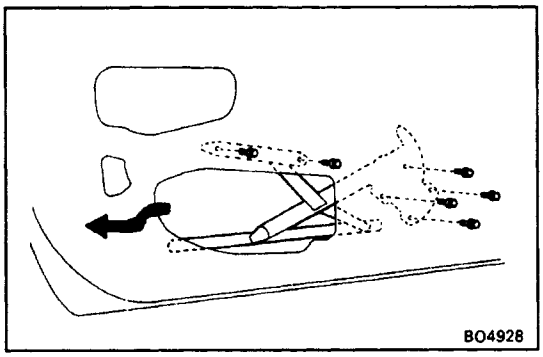

6. INSTALL WIND REGULATOR

(a) Place the regulator through the service hole.

(b) Install four regulator mounting bolts.

(c) Temporarily tighten two equalizer arm bracket bolts.

(d) (w/ Power Window)
Connect the connector.

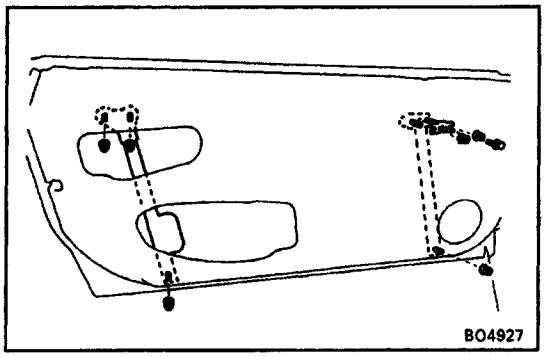

7. INSTALL REAR GLASS GUIDE

Install the rear glass guide with the lower nut and temporarity tighten two upper nuts.

8. INSTALL FRONT GLASS GUIDE

(a) Install the front glass guide with the lower nut and temporarity tighten two upper nuts.

(b) Install the lock plate and temporarily tighten the bolt.

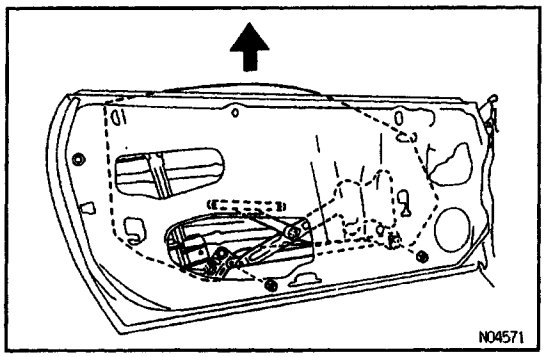

9. INSTALL DOOR GLASS

(a) Insert the glass to the glass guides.

(b) Install the glass to the regulator with two glass mounting nuts.

HINT: Insert a shop rag inside the panel to prevent scratching the glass.

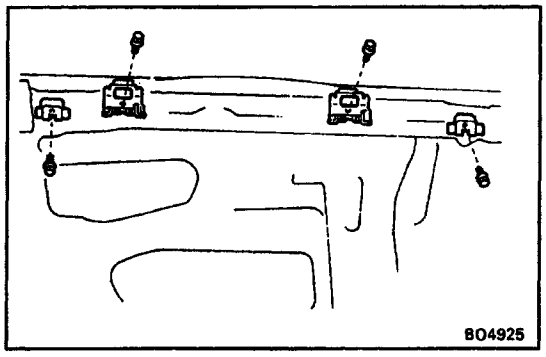

10. INSTALL DOOR TRIM SUPPORT

Install two trim supports and temporarily tighten two bolts.

11. INSTALL DOOR WINDOW UPPER STOP

Install two upper stops and temporarily tighten two bolts.

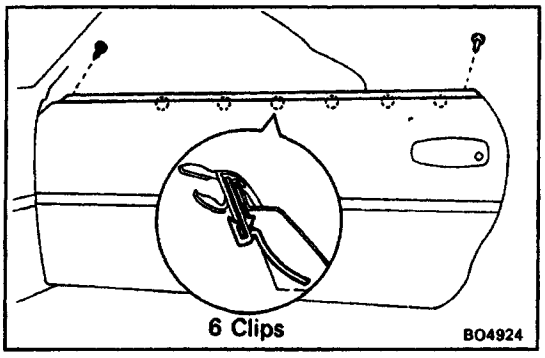

12. INSTALL DOOR BELT MOULDING

(a) Insert the claw of the clips into the upper panel slit and push the moulding onto the panel.

(b) Install the clip and the screw.

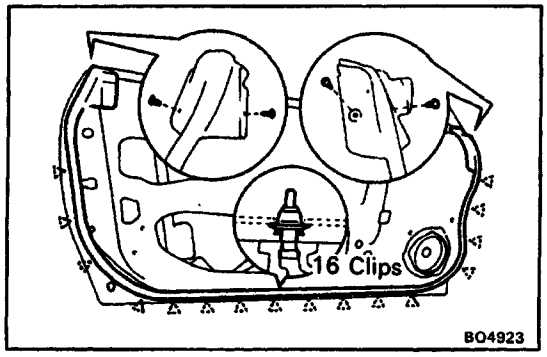

13. INSTALL DOOR WEATHERSTRIP

(a) Install the weatherstrip with clips to the panel.

(b) Install two clips and two screws.

14. INSTALL SPEAKER

(a) Connect the connector.

(b) Install the speaker with three screws.

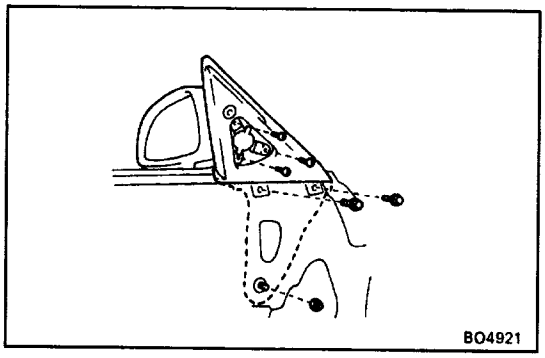

.

15. INSTALL DOOR MIRROR BRACKET

(a) Place the bracket in the panel.

(b) Install the nut and two bolts.

16. INSTALL REAR VIEW MIRROR

(a) Install the mirror with three screws.

(b) (w/ Remove Control Mirror)
Connect the connector.

17. ADJUST DOOR GLASS

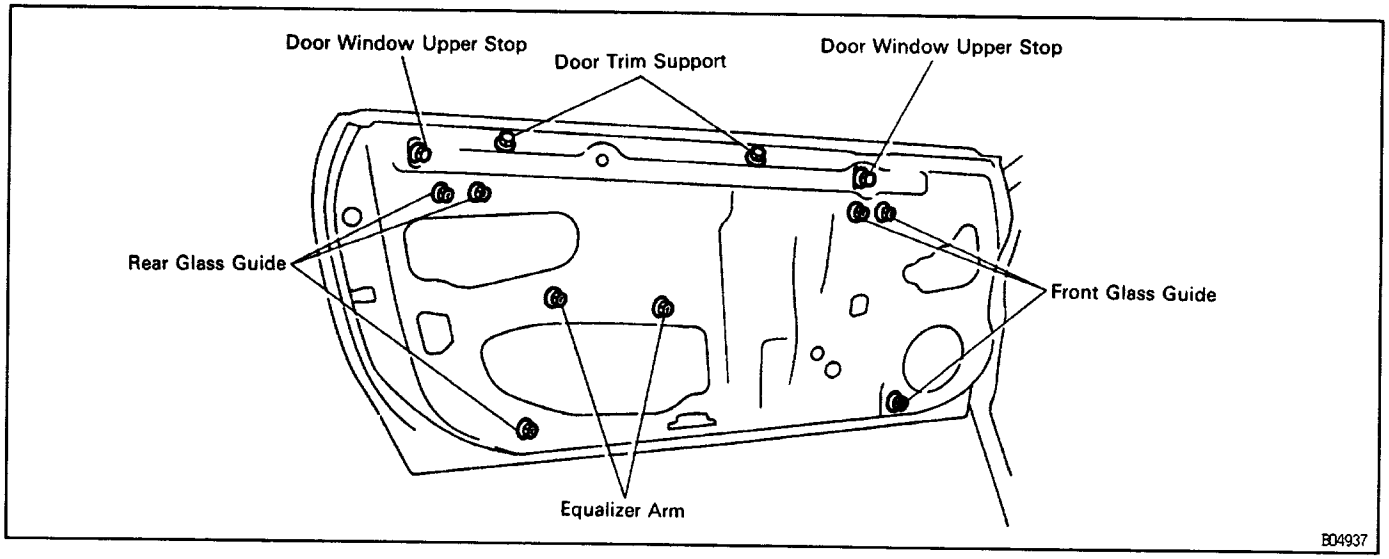

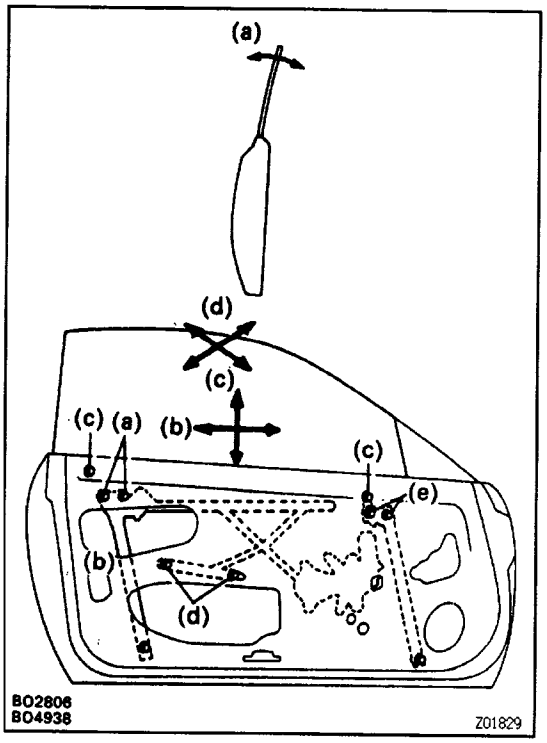

[In left/right direction –upperside of glass]

Using a hexagon wrench, adjust the stud bolts (a) of the rear glass guide. For example, if you turn right both stud bolts, the upper side of the glass move to outside.

HINT: Turn both stud bolts of the glass guide and equal amount.

[In forward/rearward direction]

Loosen the two nuts and slide the rear glass guide (b) forward or rearward to adjust the glass.

[In vertical direction]

Adjust the door window upper stop (c).

[In lean of forward/rearward –direction]

Adjust the equalizer arm bracket mounting bolts (d).

18. TIGHTEN EACH BOLT, NUT OF EACH PART

HINT: When installing the front guide, after, adjusting each part, temporarily tighten the two nuts (e) until they touch the inner panel surface.

Then install the lock plate and tighten the bolt.

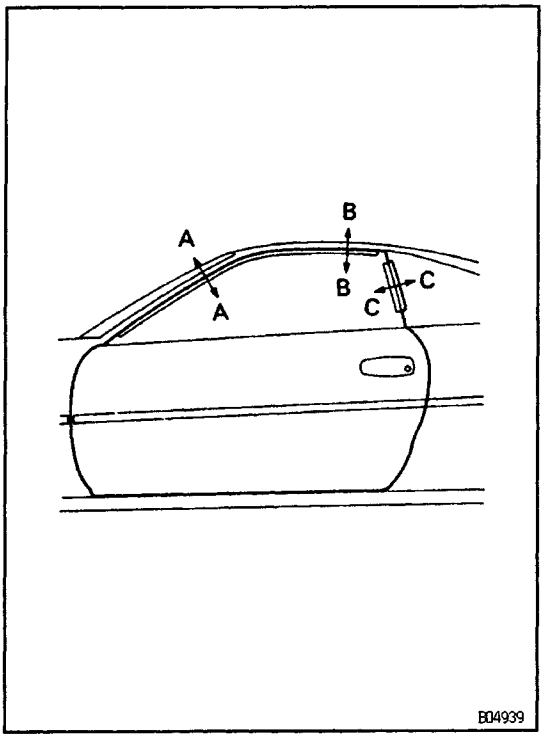

19. CHECK DOOR GLASS

(a) When you close the door with the glass fully closed check that the A–A, B–B, C–C, sections are in the same condition as shown in the illustration.

(b) When you close the door with the glass fully closed, be careful that the glass is not caught in the weath–erstrip.

(c) When you raise up the glass, check that the glass and the roof weatherstrip retainer are parallel and the front and rear door window upper stops touch at the same time.

(d) When you raise up the glass to the middle, check that the gap ofthe glass is not big in the door trim support.

(e) Check that the glass move smoothly.
If the above conditions are not met, readjust the glass.

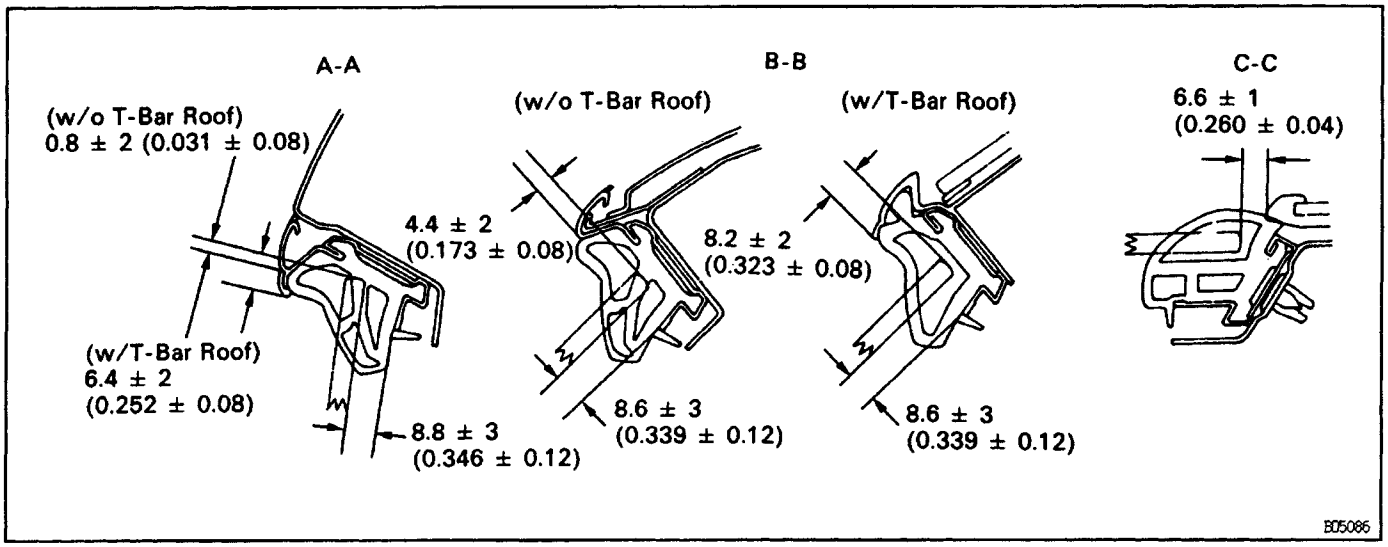

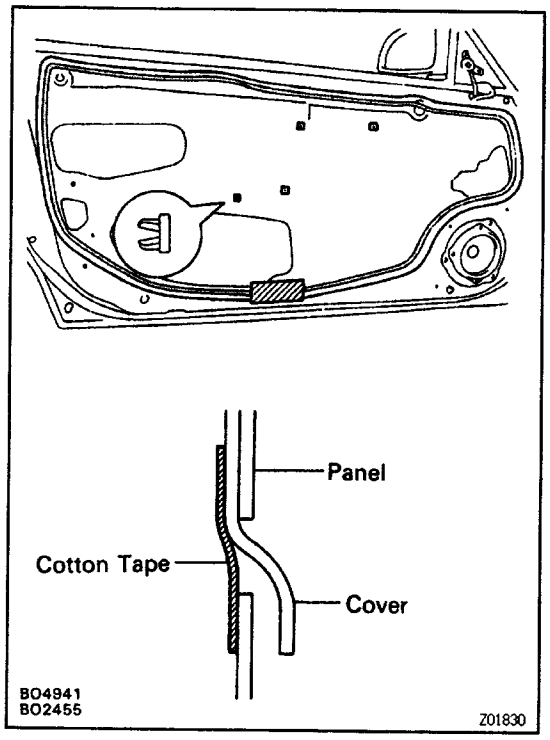

20. INSTALL SERVICE HOLE COVER

(a) Seal the service hole cover with adhesive.
HINT: Bring out the link through the service hole cover.

(b) Insert the lower edge of the cover into the panel slit.

(c) Seal the panel slit with cotton tape.
NOTICE: Do not block the trim clip sealing with the tape.

(d) Install four screw grommets.

21. INSTALL DOOR TRIM BRACKET

Install the bracket with two bolts.

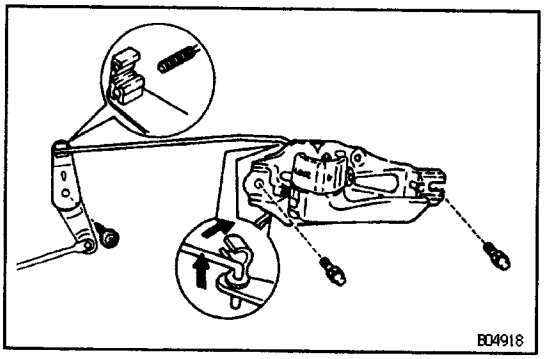

22. INSTALL LOCKING LINK

Install the locking link with the screw.

23. INSTALL DOOR INSIDE HANDLE

(a) Connect two links to the inside handle.

(b) Install the inside handle with two bolts.

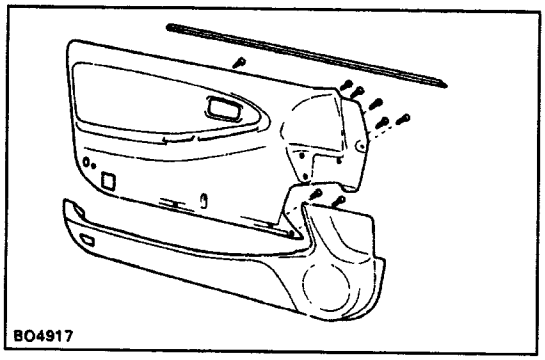

24. INSTALL DOOR TRIM

(a) Install the inner weatherstrip to the door trim.

(b) Install the door trim pocket with eight screws to the door trim.

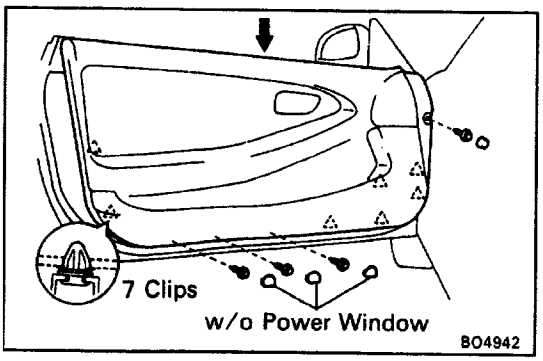

(c) (w/ Door Courtesy Light)
Connect the connector.

(d) Insert the upper edge of the trim from above, tap the trim by hand and fix it in place with the clips.

(e) Install four bolts.

(f) (w/o Power Window)
Install three covers.

(g) Install the screw cap.

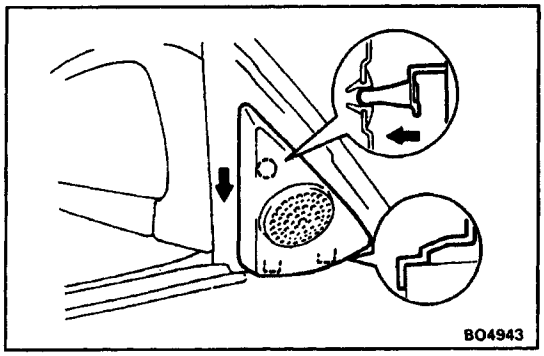

25. INSTALL MIRROR COVER

Insert the lower edge of the cover from above, tap the cover to install it.

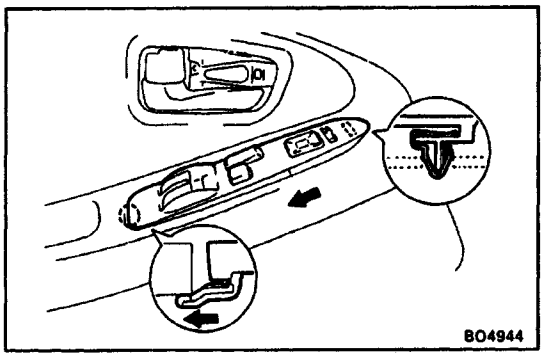

26. (w/ Power Window)
INSTALL ARMREST PANEL

(a) Connect the connectors.
(b) Slide the panel rearward and tap the panel to install it.

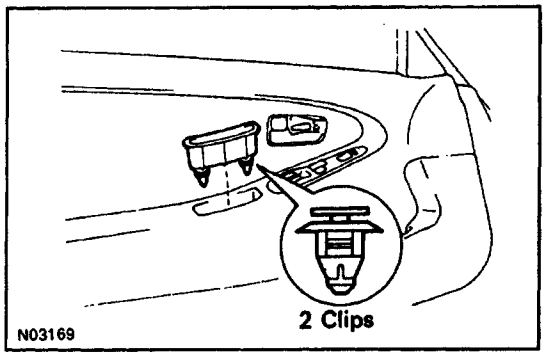

27. INSTALL DOOR PULL HANDLE

Push the pull handle to install it.

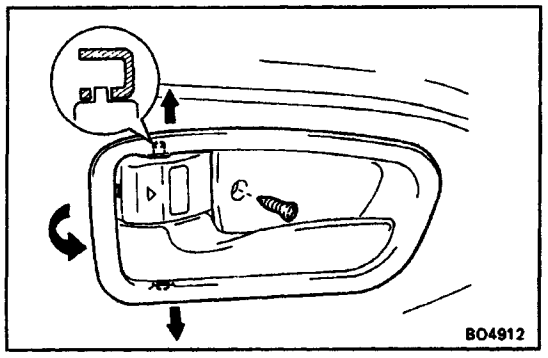

28. INSTALL DOOR INSIDE HANDLE BEZEL

(a) Push in the bezel to install it.
(b) Install the screw.

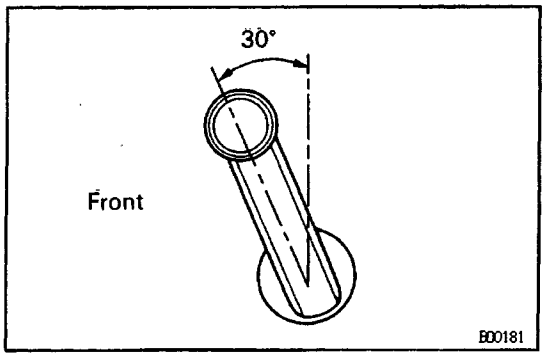

29. (w/o Power Window)
INSTALL REGULATOR HANDLE

With door window fully closed, install the plate and the regulator handle with the snap ring as shown.

BODY

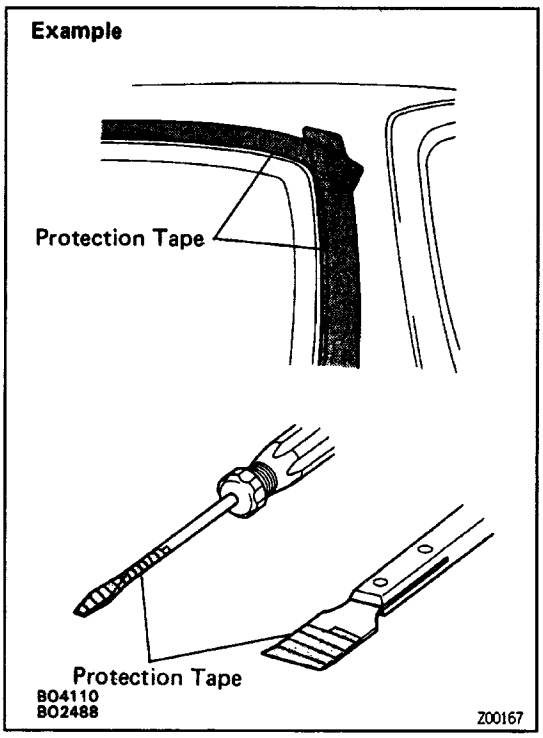

GENERAL INFORMATION

B001M–02

HANDLING PRECAUTIONS

Taping

When it is possible that the body or parts may be scratched during the operation, apply protection tape before starting work.

Example:

1. Before starting work, apply protection tape to body surfaces around parts to be removed and installed.
2. Before prying parts loose with a screwdriver or scraper etc., apply protection tape to the tip of the tool to avoid scratching parts or painted surfaces of the body.

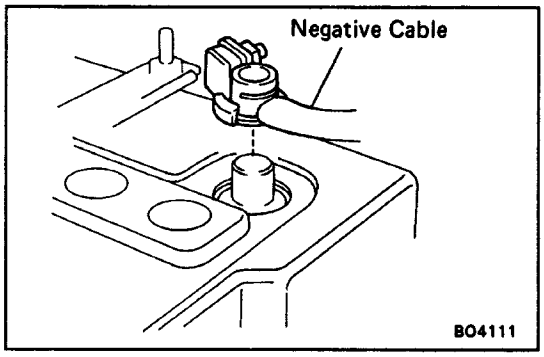

Battery

In order to prevent a short circuit while doing work on the electrical circuit such as disconnecting a con–nector, first turn off the ignition switch and discon–nect the negative cable from the battery terminal before starting work.

HINT: When battery voltage is required for operation of a functioning part, connect the cable to the battery when needed, and promptly disconnect it when no longer necessary.

CAUTION:

- **Work must be started after approx. 20 seconds or longer from the time the ignition switch is turned to the 'LOCK' position and the negative (–) terminal cable is disconnected from the battery.**
- **To avoid erasing the memory of each memory system, never use a back–up power supply from outside the vehicle.**

Fitting Adjustments

When removing and installing body panels which have a preload value, after the installation refer to the page containing the installation adjustment methods, and make adjustments according to the required specifi–cations.

HINT: When making adjustments, do not completely loosen the bolts and nuts of the part being adjusted. Tighten them appropriately, and move the panels by hand to align them.

BO01N–01

ANTI–RUST TREATMENT

Anti–rust treatment used on the vehicle body includes body sealer, undercoat, rust inhibitor and paint.
HINT: Refer to the Body Collision Damage Repair Manual for details of which parts have received anti–rust treatment.

Body Sealer

If the body sealer is damaged (peeling, cracks, etc.) during the operation, replace it with new body sealer.

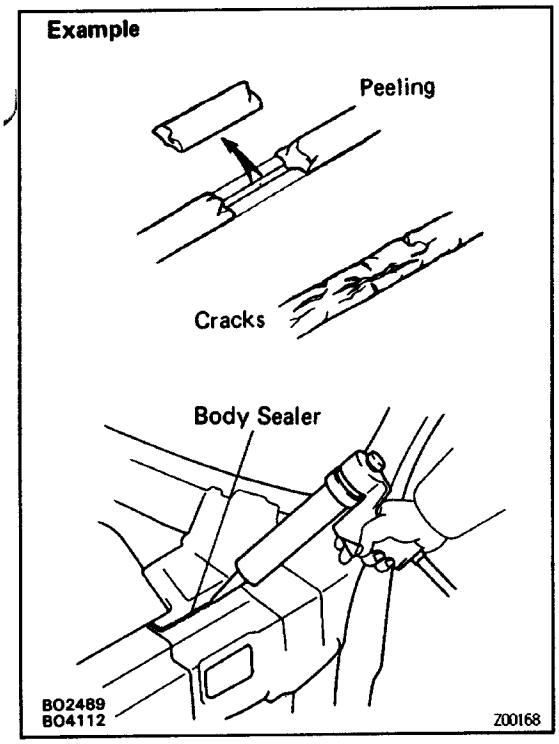

HINT: If body sealer gets on other parts, promptly wipe it off with a clean cloth dipped in a grease, wax and silicone remover.

Undercoat

If the undercoat is damaged during the operation, apply new undercoat.
HINT:

- Cover the surrounding area with masking paper to avoid applying undercoat where it is not needed.
- Do not apply undercoat to high temperature parts such as the tailpipe, or to drive parts such as the drive shaft.

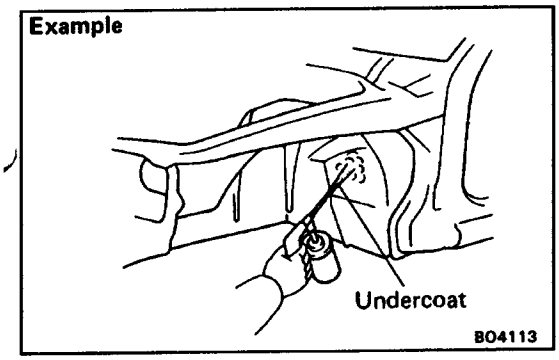

Rust Inhibitor

After removing and re–installing hinges and outer panel parts, apply rust inhibitor to the parts.
HINT: If rust inhibitor gets spilled on other parts, promptly wipe it off with a clean cloth dipped in a grease, wax and silicon remover.

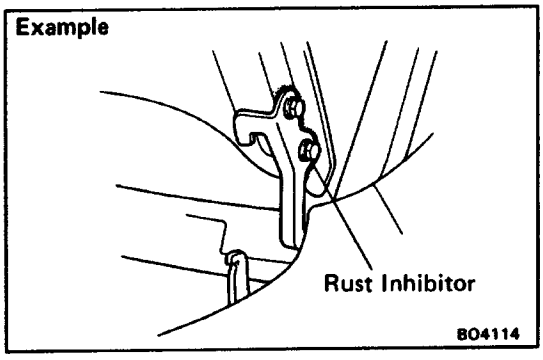

Touch –Up Paint

If a small scratch is made in the body surface, correct the scratch using touch–up paint the same color as the body color.

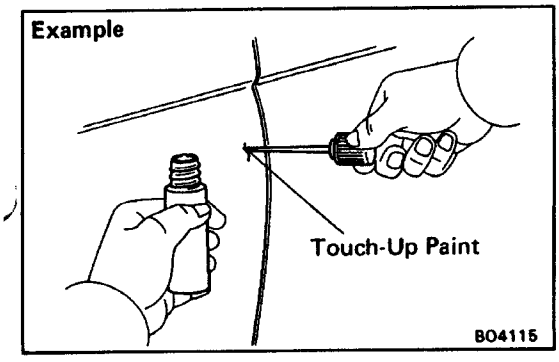

CLIPS

The removal and installation methods of typical clips used in body parts are shown in the table below.
HINT: If the clip is damaged during the operation, always replace it with a new clip.

Shape (Example)	Removal/installation
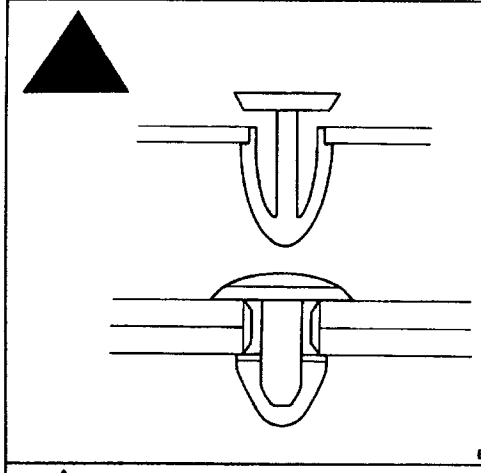 B04116	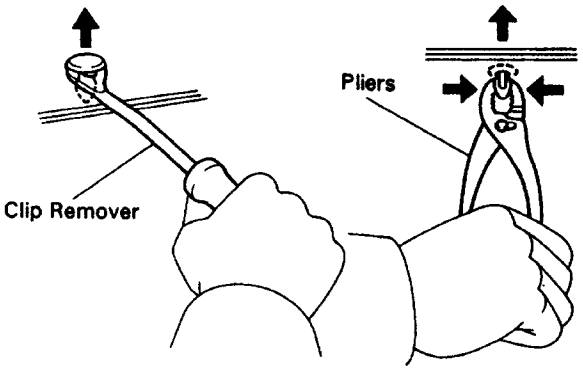 B04117
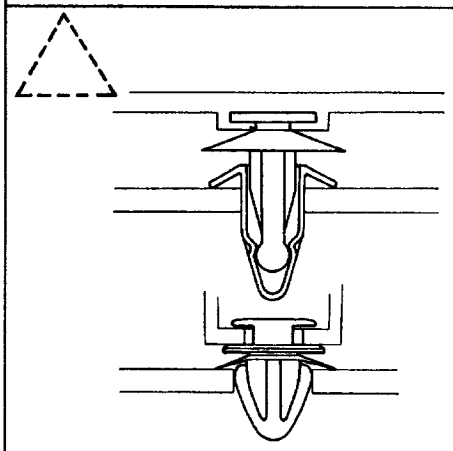 B04118	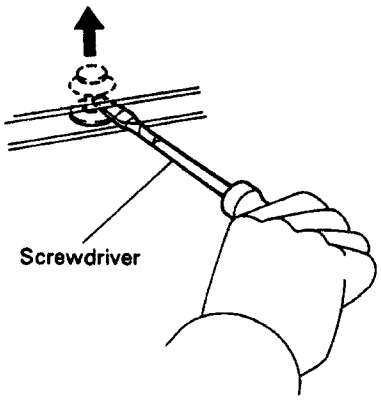 B04119
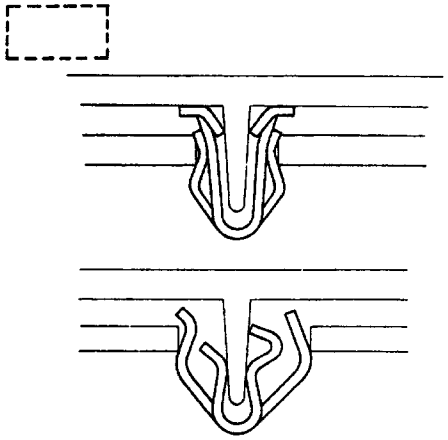 B04120	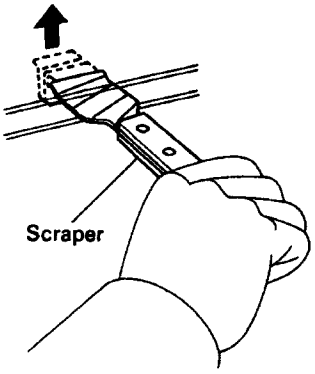 B04121

V00005

CLIPS (Cont'd)

Shape (Example)	Removal/installation
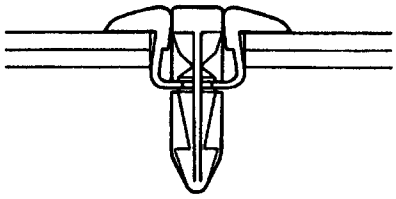 BO4122	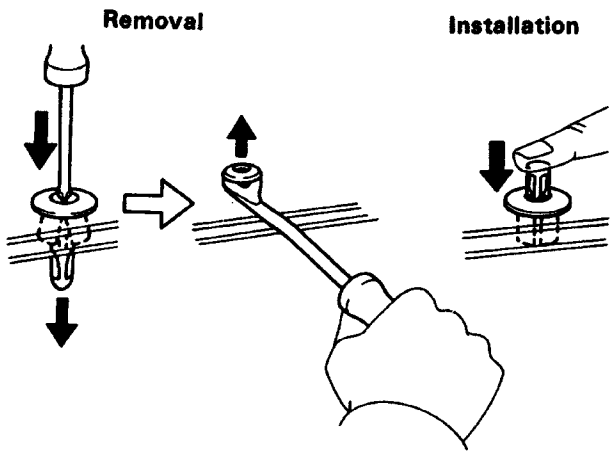 BO4123
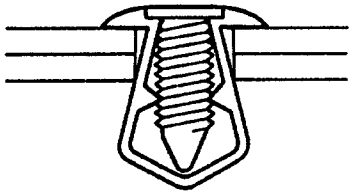 BO4124	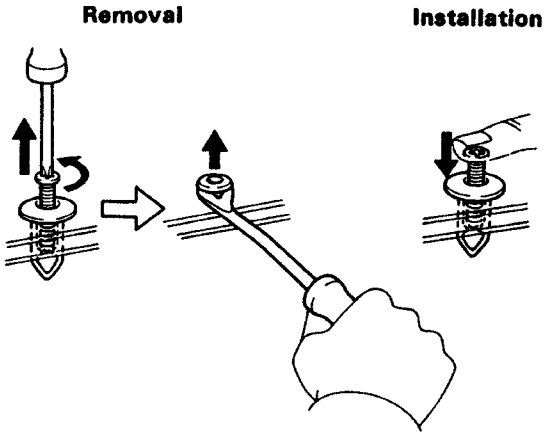 BO4125

V00012

BO01Q–08

SRS AIRBAG

(See page AB–2)

The 1993 MR2 is equipped with an SRS (Supplemental Restraint System) airbag.
Failure to carry out service operations in the correct sequence could cause the airbag system to deploy, possibly leading to a serious accident.
When removal or installation of airbag parts and the yellow wire harness and connector for the airbag is necessary, refer to the precautionary notices in the AB section before perorming the operation.

- Work must be started after 20 seconds or longer from the time the ignition switch is set to the LOCK position and the negative (–) terminal cable is disconnected from the battery. (The airbag system is equipped with a back–up power source so that if work is started within 20 seconds of disconnecting the negative (–) terminal cable of the battery, the airbag may be deployed.)
- To avoid erasing the memory of each memory system, never use a back–up power supply from outside the vehicle.
- Before repairs, remove the airbag sensors if shocks are likely to be applied to the sensors during repaires.
- The front airbag sensor set bolt has been anti–rust treated. When the sensor is removed, always replace the set bolt with a new one.
- If the front airbag sensors, center airbag sensor or steering wheel pad have been dropped, or if there are cracks, dents or other defects in the case, bracket or connector, replace them with new ones.
- Never use airbag parts from another vehicle. When replacing parts, replace them with new pa rts.
- Do not expose the front airbag sensors, center airbag sensor or steering wheel pad directly to hot air or flames.
- The airbag system's wire harness is integrated with the cowl wire harness assembly. The wires for the airbag wire harness are encased in a yellow corrugated tube. All the connectors for the system are also a standard yellow color. If the airbag system wire harness becomes disconnected or the connector becomes broken due to an accident, etc., repair or replace it as shown on page AB–22.
- The steering wheel must be fitted correctly to the steering column with the spiral cable at the neutral position; otherwise, cable disconnection and other troubles may result. Refer to page AB–17 of this manual concerning correct steering wheel installation.
- When removing the steering wheel pad or handling a new steering wheel pad, it should be placed with the pad top surface facing up. In this case, the twin–lock type connector lock lever should be in the locked state and care should be taken to place it so the connector will not be damaged. (Storing the pad with its metallic surface up may lead to a serious accident if the airbag inflates for some reason.)
  Grease should not be applied to the steering wheel pad and the pad should not be cleaned with detergents of any kind.
- Store the steering wheel pad where the ambient temperature remains below 93˚C (200˚F), without high humidity and away from electrical noise.
- Information labels are attached to the periphery of the airbag components. Follow the notices.
- When the ignition switch is at ACC or ON and the airbag warning light remains on, the center airbag sensor assembly has detected a malfunction code. (See page AB–30)

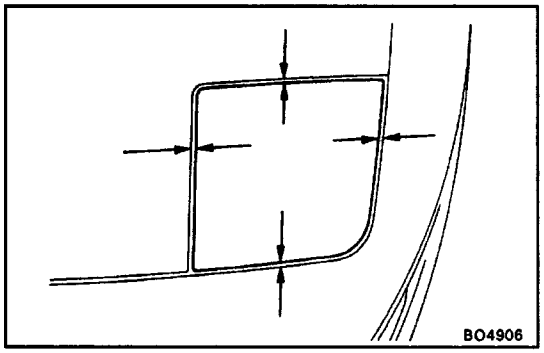

HEADLIGHT

CAUTION: When adjusting each section, raise or lower the headlight with the light control switch. But when adjusting each section, be sure to remove the RTR fuse (30A) before adjusting.

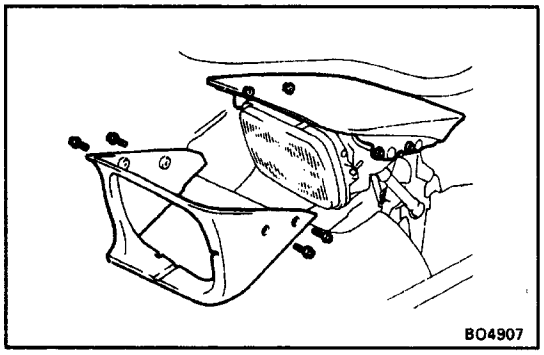

HEADLIGHT ADJUSTMENT

1. ADJUST HEADLIGHT HOOD IN FORWARD/REARWARD AND LEFT/RIGHT DIRECTIONS

(a) Remove the headlight door.
(b) Adjust the headlight hood by loosening four cover set screws.

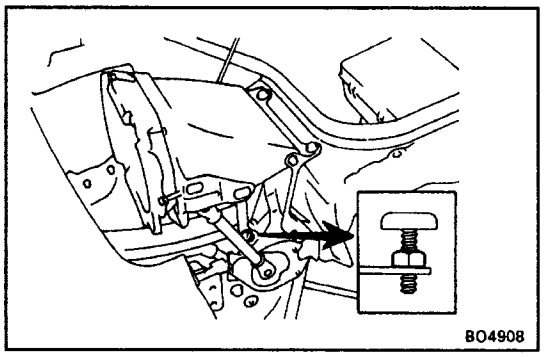

2. ADJUST HEADLIGHT SLANT

(a) Loosen the stopper lock nut.
(b) Lower the headlight.
(c) Turn the manual operation knob to align the rod and the crank arm.
(d) Change the rod lengh to adjust the headlight slant.

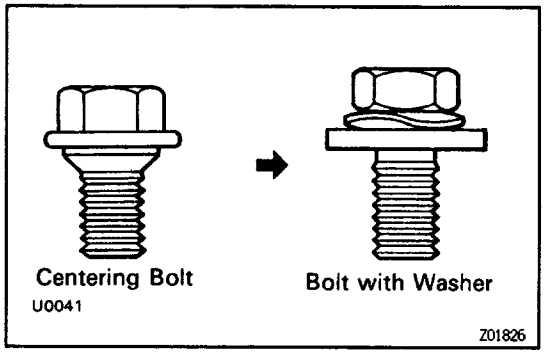

HOOD

HOOD ADJUSTMENT

BO0B5–01

HINT: Since the centering bolt is used as the hooc hinge set bolt, the hood cannot adjusted with it on. Sub–stitute the bolt with the washer for the cente–ring bolt.

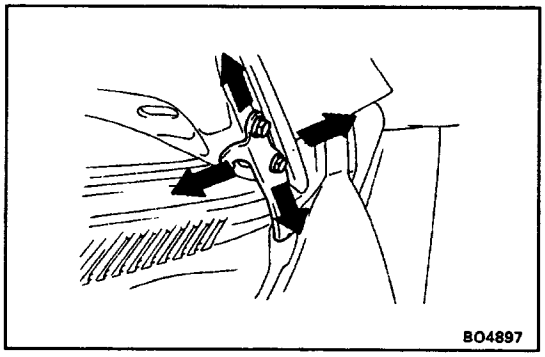

Front Hood

BO0B6–01

1. ADJUST FRONT HOOD IN FORWARD/REARWARD AND VERTICAL DIRECTIONS

Adjust the hood by loosening the hood side hinge bolts.

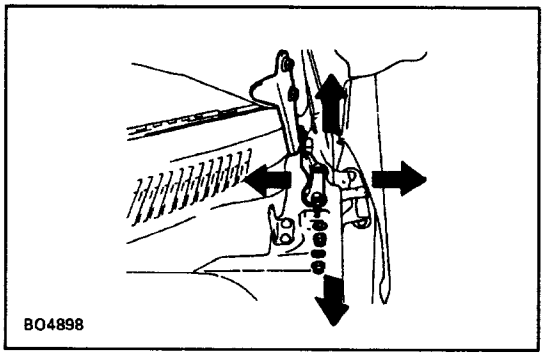

2. ADJUST REAR EDGE OR FRONT HOOD IN LEFT/ RIGHT AND VERTICAL DIRECTIONS

(a) Remove front fender

(b) (Left/Right Direction)
Adjust the hood by loosening the hood hinge bolts.
(Vertical Direction)
Adjust the hood by increasing or decreasing the number of the shims.

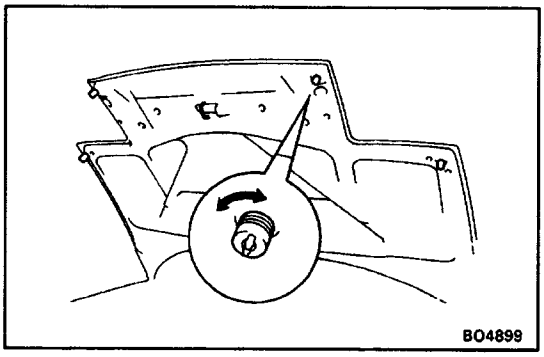

3. ADJUST FRONT EDGE OF FRONT HOOD IN VER–TICAL DIRECTIONS

Adjust the hood by turning the cushions.

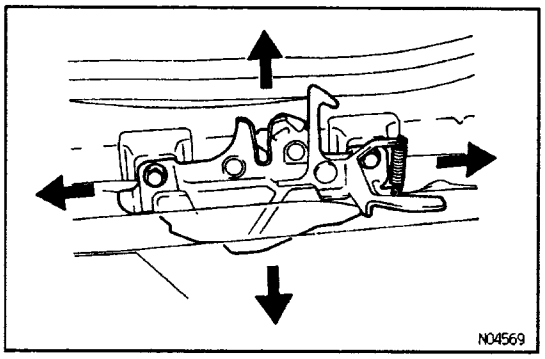

4. ADJUST FRONT HOOD LOCK IN FORWARD/REA–RWARD AND LEFT/RIGHT DIRECTIONS

Adjust the lock by loosening bolts.

B0087–01

Engine Hood

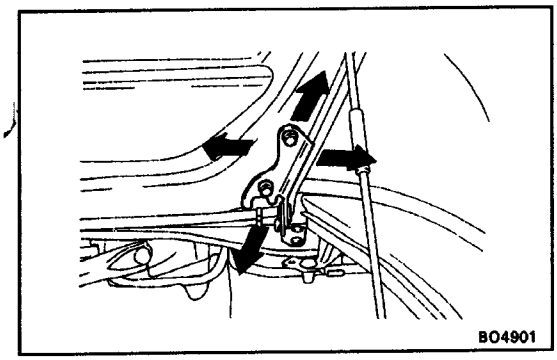

1. ADJUST ENGINE HOOD IN FORWARD / REARWARD AND LEFT/RIGHT DIRECTIONS

Adjust the hood by loosening the body side hings bolts.

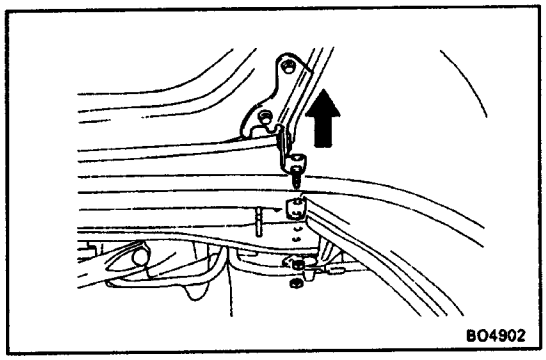

2. ADJUST FRONT EDGE OF ENGINE HOOD IN VERTICAL DIRECTION

Adjust the hood by increasing the number of shims.

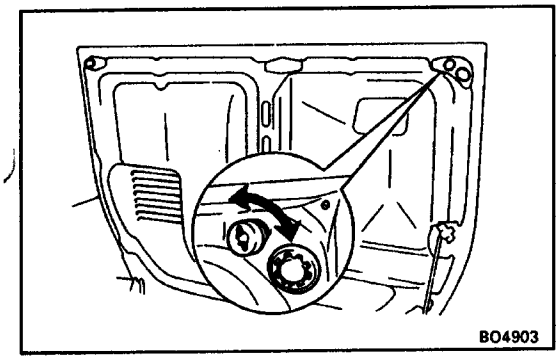

3. ADJUST REAR EDGE OF ENGINE HOOD IN VERTICAL DIRECTION

Adjust the hood by turning the cushions.

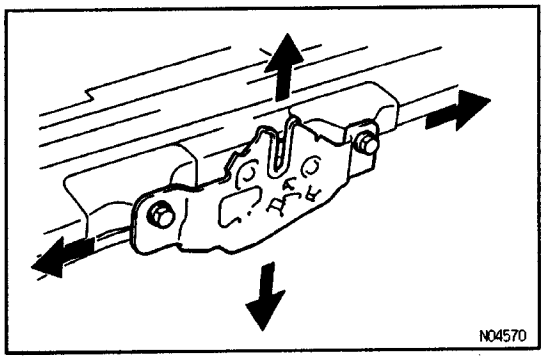

4. ADJUST ENGINE HOOD LOCK IN FORWARD/ REARWARD AND LEFT/RIGHT DIRECTIONS

Adjust the hood lock by loosening the mounting bolts.

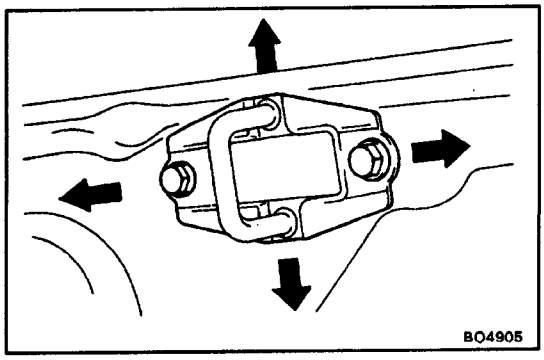

5. ADJUST ENGINE HOOD LOCK STRIKER

(a) Check that the hood fit and hood lock are adjusted correctly.
(b) Loosen the striker mounting bolts to adjust.
(c) Using a plastic hammer, top the striker to adjust it.

INSTRUMENT PANEL

BO0CP–01

COMPONENTS

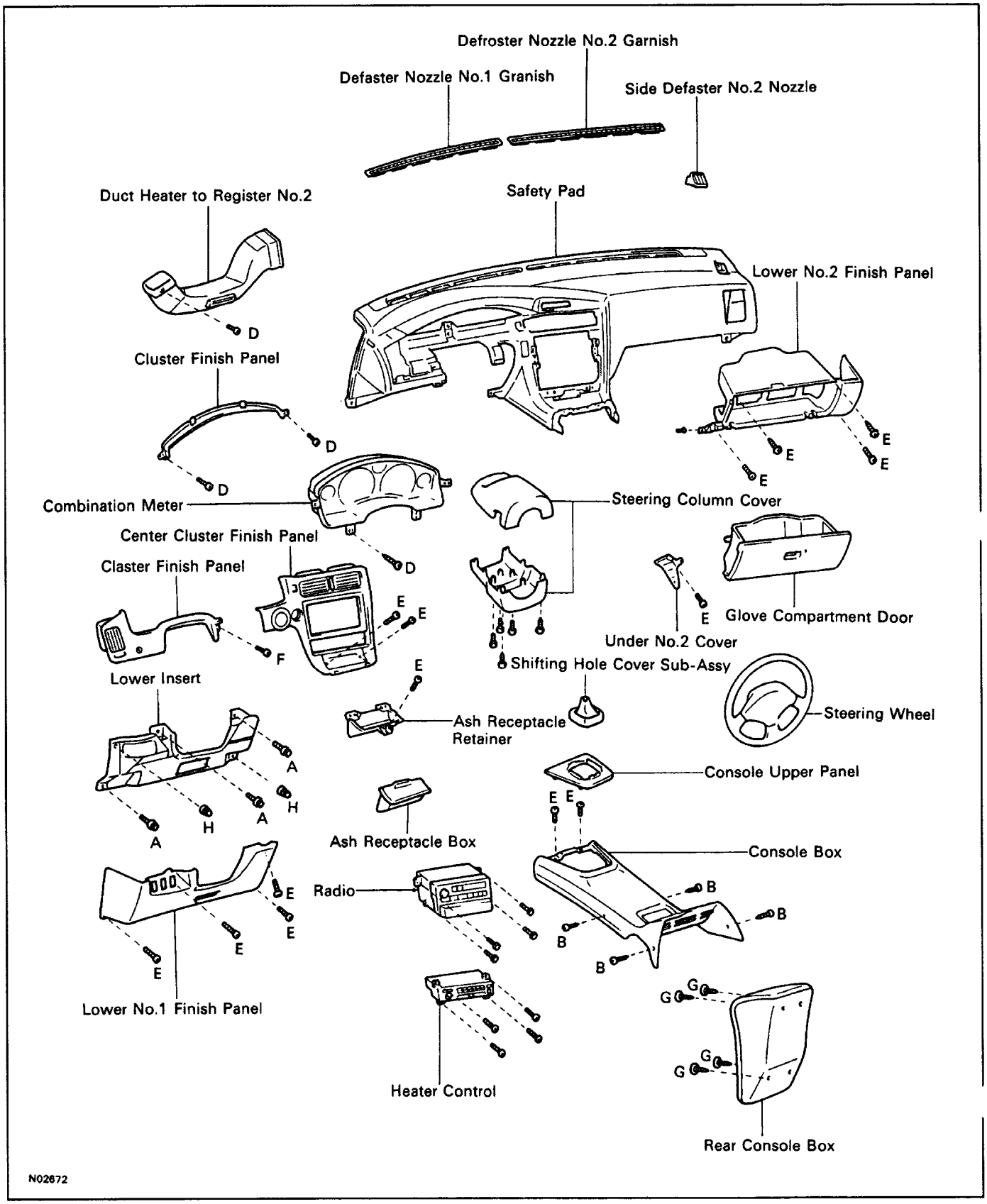

HINT: Screw sizes in the illustration on the previous page are indicated using the code below for removal and installation of instrument panel.

mm (in.)

Code	Shape	Size	Code	Shape	Size	Code	Shape	Size	Code	Shape	Size
A	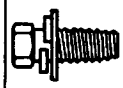	ϕ=6 (0.24) L=20 (0.99)	B	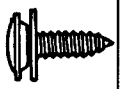	ϕ=5 (0.20) L=18 (0.71)	C		ϕ=5.22 (0.2055) L=14 (0.55)	D		ϕ=5.22 (0.2055) L=16 (0.63)
E		ϕ=5.22 (0.2055) L=14 (0.55)	F		ϕ=5.22 (0.2055) L=20 (0.79)	G	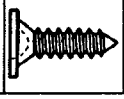	ϕ=5 (0.20) L=18 (0.71)	H	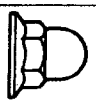	-

BO5088

V00853

BO0CQ-01

INSTRUMENT PANEL REMOVAL

(See page BO–72)

1. **DISCONNECT BATTERY CABLE FROM NEGATIVE TERMINAL**
2. **REMOVE FOLLOWING PARTS:**
   (See steps 4 to 5 on page BO–41 to BO–42)

(a) Door scuff plate
(b) Front pillar garnish

3. **REMOVE STEERING WHEEL**
   (See page SR–5)

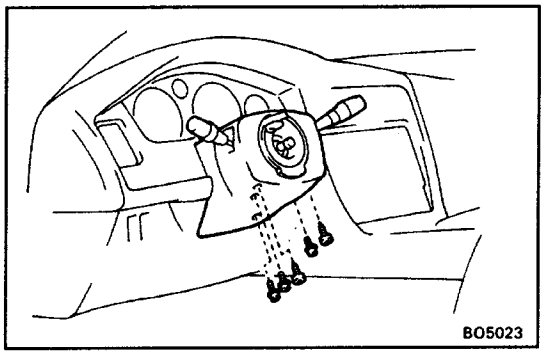

BO5023

4. **REMOVE STEERING COLUMN COVER**
   Remove five screws and the column covers.

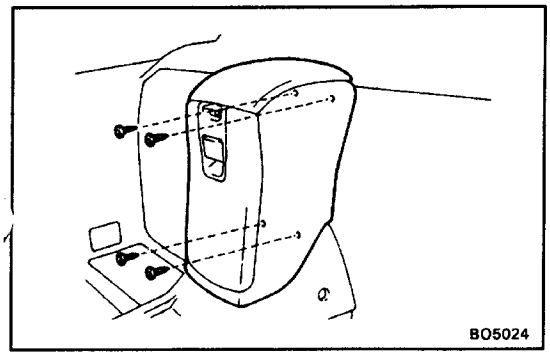

BO5024

5. **REMOVE REAR CONSOLE BOX**

(a) Open the console box doors.
(b) Remove four screws and the console box.

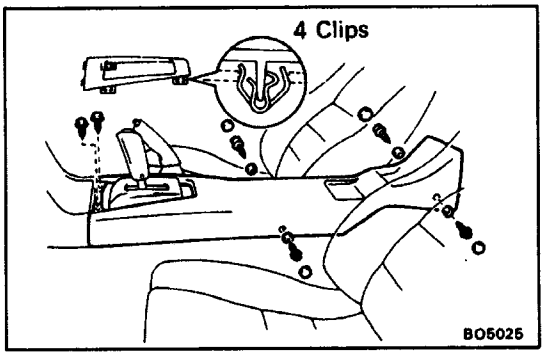

6. REMOVE CONSOLE UPPER PANEL

(a) Using the screwdriver, remove the clip.
HINT: Tape the screwdriver tip before use.

(b) Pull the panel rearward and remove it.

7. REMOVE CONSOLE BOX

(a) Using the screwdriver, remove four screw caps.
HINT: Tape screwdriver tip before use.

(b) Remove six screws, four bushes and the console box.

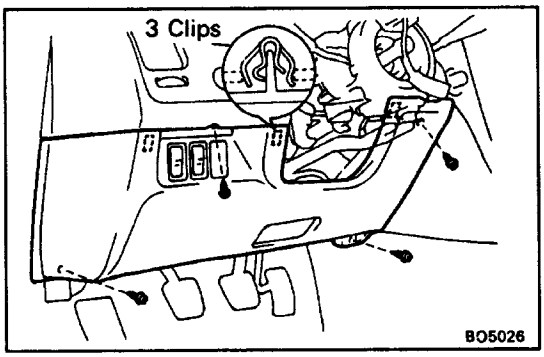

8. REMOVE LOWER NO.1 FINISH PANEL

(a) Remove four screws.

(b) Remove the panel by pulling then disconnect the connectors.

(c) Remove the lower No. 1 register from the panel.

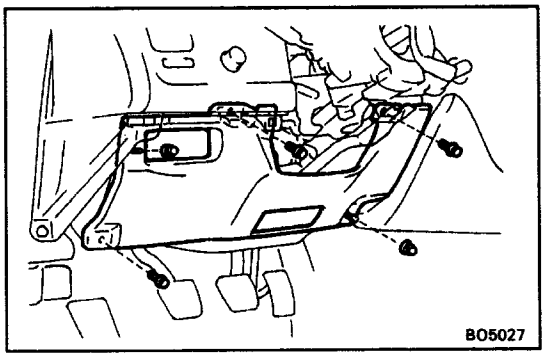

9. REMOVE LOWER INSERT

Remove three bolts, two nuts and the lower insert.

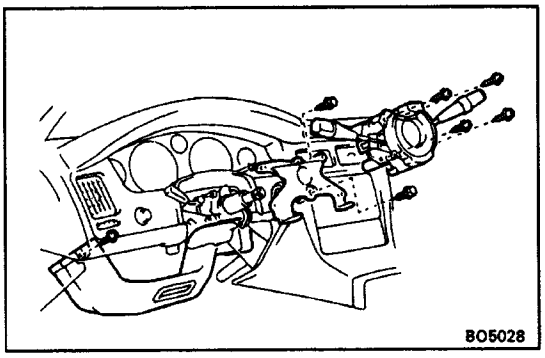

10. REMOVE DUCT HEATER TO REGISTER NO.2

Remove the screw and the duct.

11. REMOVE COMBINATION SWITCH

(a) Disconnect the connectors.

(b) Remove four screws and the combination switch.

12. REMOVE TURN SIGNAL BRACKET

Remove two bolts and the bracket.

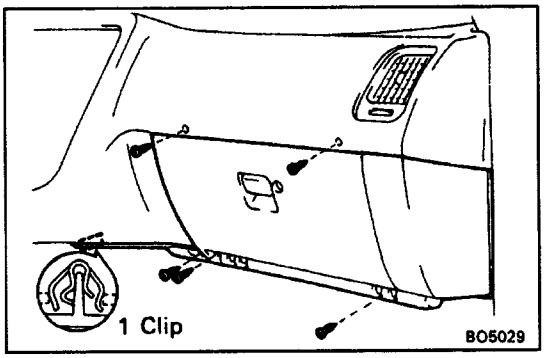

13. REMOVE UNDER NO.2 COVER

(a) Remove the screw.

(b) Remove the cover by pulling.

14. REMOVE LOWER No.2 FINISH PANEL

Remove four screws and the panel.

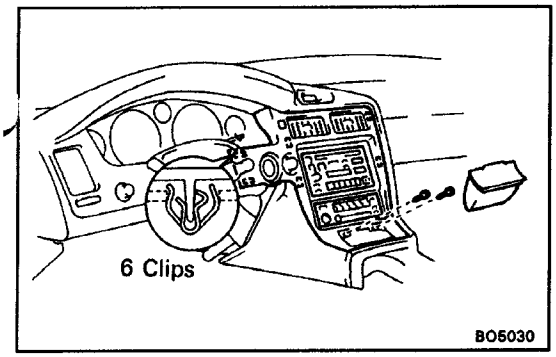

15. REMOVE CENTER CLUSTER FINISH PANEL

(a) Remove the ash receplacle box by pulling.
(b) Remove two screws.
(c) Using the screwdriver, remove the panel and discon–nect the connector.
HINT: Tape the screwdriver tip before use.

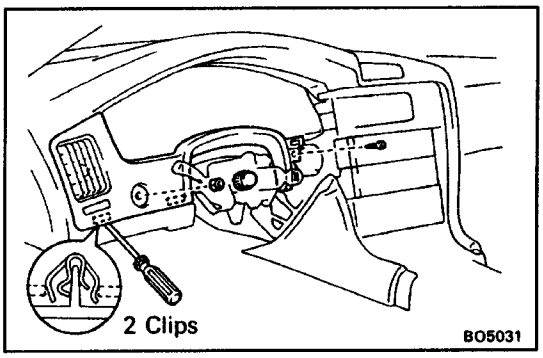

16. REMOVE CLUSTER FINISH PANEL

(a) Remove the rheostat knob by pulling.
(b) Remove the nut from the rheostat.
(c) Remove the screw.
(d) Using the screwdriver, remove the panel and discon–nect the connector.
HINT: Tape the screwdriver tip before use.

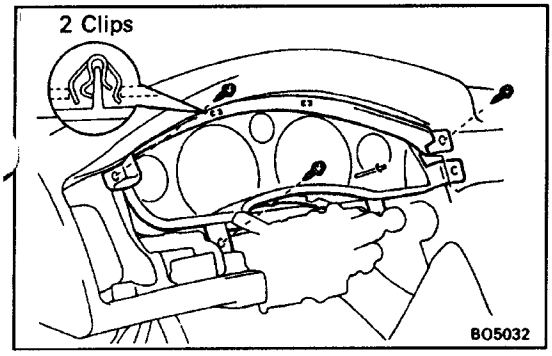

17. REMOVE CLUSTER FINISH PANEL

(a) Remove two screws.
(b) Using the screwdriver, remove the panel.
HINT: Tape the screwdriver tip before use.

18. REMOVE COMBINATION METER

(a) Remove the screw.
(b) Disconnect the connectors and the meter bracket.
(c) Remove the meter.

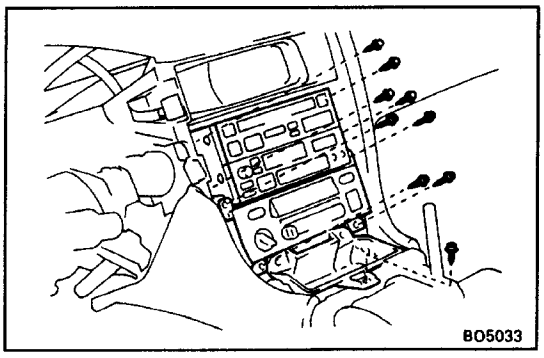

19. REMOVE RADIO

Remove four bolts and the radio.

20. REMOVE HEATER CONTROL

Remove four screws and hang the heater control.

21. REMOVE ASH RECEPTACLE RETAINER

Remove the screw and the retainer.

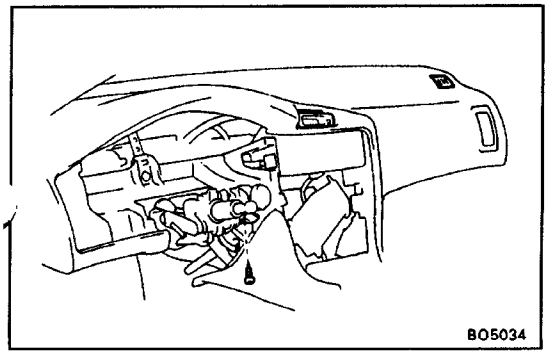

22. REMOVE CLOCK

(a) Using the screwdriver, remove the clock ornament.
HINT: Tape the screwdriver tip before use.
(b) Disconnect the connector and remove the clock.

23. REMOVE SIDE DEFROSTER NO.2 NOZZLE

24. REMOVE BRACKET

Remove the screw and the bracket from the safety pad.

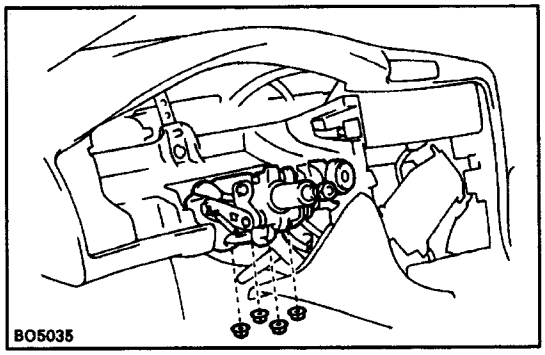

25. DISCONNECT STEERING COLUMN

(a) Remove four nuts.

(b) Disconnect the steering column from the reinforce–ment.

26. REMOVE SAFETY PAD

Remove five bolts, five screws, the nut and the safety pad.

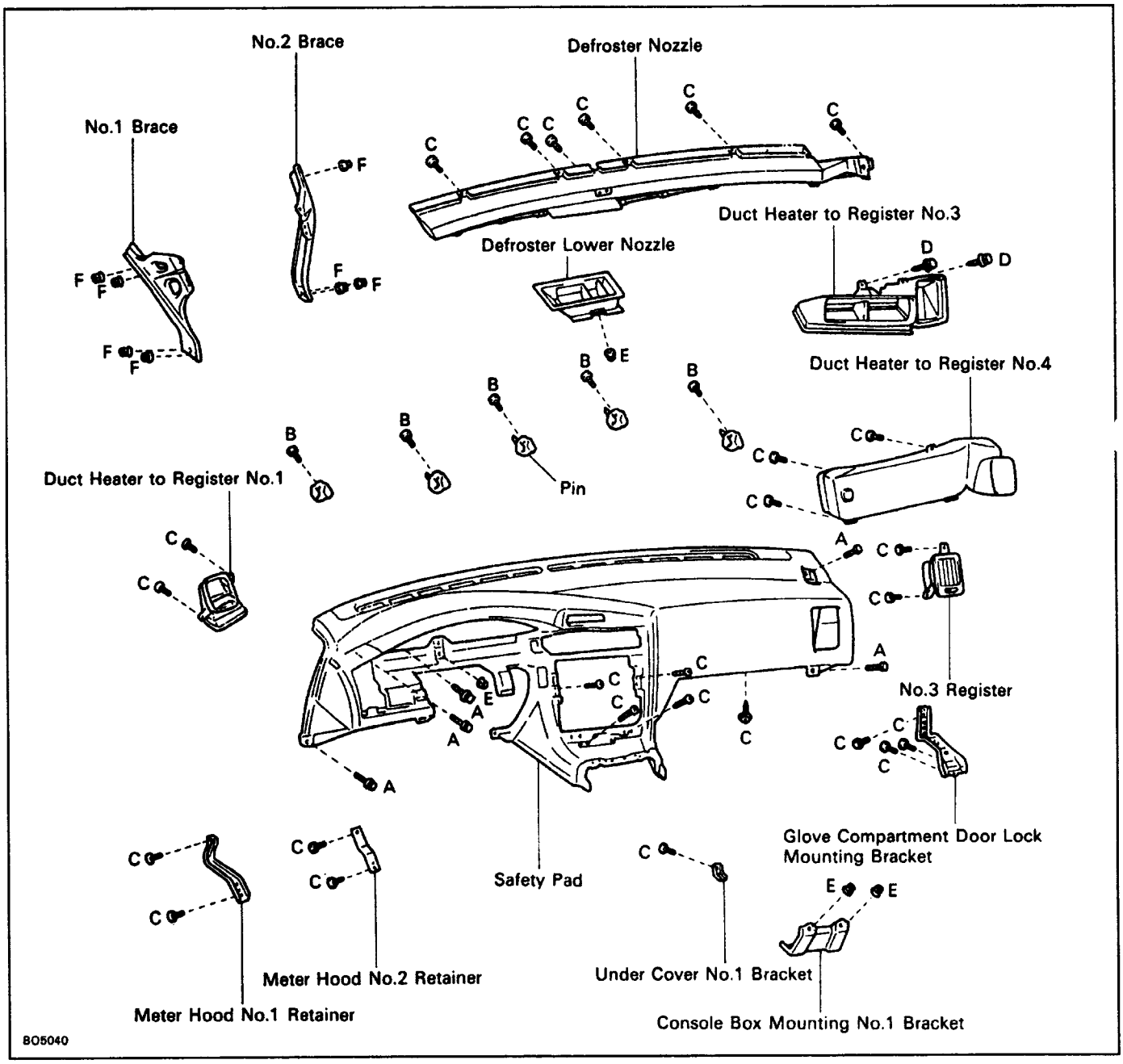

HINT: Screw sizes in the illustration on the previou: page are indicated using the code below for remova and installation of instrument panel.

mm (in.)

Code	Shape	Size	Code	Shape	Size	Code	Shape	Size
A	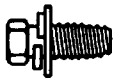	ϕ=6 (0.24) L=20 (0.79)	B		ϕ=4.5 (0.177) L=12 (0.47)	C		ϕ=5.22 (0.2055) L=16 (0.63)
D		ϕ=6 (0.24) L=14 (0.55)	E		–			–

BO5036

V00854

27. REMOVE FOLLOWING PARTS FROM SAFETY PAD

- Defroster nozzle
- Defroster nozzle No. garnish
- Defroster nozzle No.2 garnish
- Meter hood No. retainer
- Meter hood No.2 retainer
- Glove compartment door lock mounting bracket
- Dust heater to register No.
- Dust heater to register No.4
- No.3 register
- Under cover No.1 bracket
- Pin

28. REMOVE FOLLOWING PARTS:

- Defroster lower nozzle
- Dust heater to register No.3
- No. brace
- No.2 brace
- Console box mounting No.1 bracket

BO0CR–01

INSTRUMENT PANEL INSTALLATION

(See page BO–72 and BO–76)

INSTALL INSTRUMENT PANEL PARTS BY FOL–LOWING REMOVAL SEQUENCE IN REVERSE

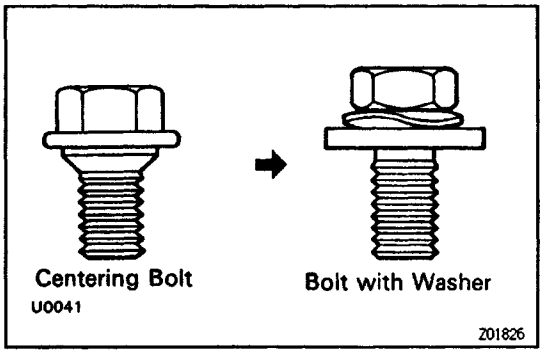

LUGGAGE COMPARTMENT DOOR

LUGGAGE COMPARTMENT DOOR ADJUSTMENT

HINT: Since the centering bolt is used as the door hings set bolt, the door cannot be adjusted with it on. Substitute the bolt with the washer for the centering bolt.

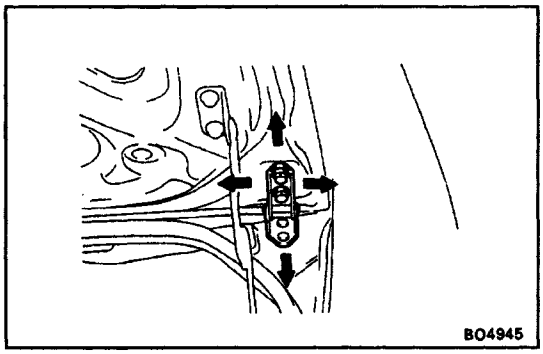

1. ADJUST DOOR IN FORWARD/ REARWARD AND LEFT/RIGHT DIRECTIONS

Adjust the door by loosening the door side hinge bolts.

2. ADJUST DOOR IN VERTICAL DIRECTION

Adjust the door by increasing the number of shims.

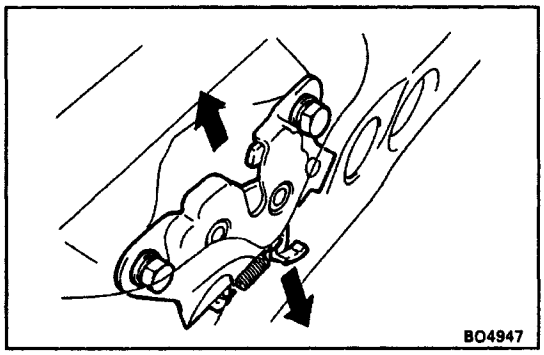

3. ADJUST LUGGAGE COMPARTMENT DOOR LOCK

Adjust the lock by loosening the bolts.

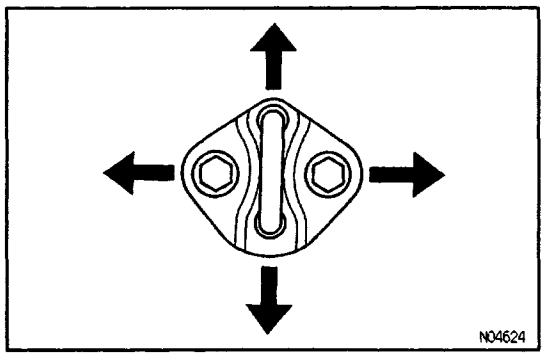

4. ADJUST DOOR LOCK STRIKER

(a) Check that the door fit and door lock are adjusted correctly.
(b) Loosen the striker mounting screws to adjust.
(c) Using a plastic hammer, tap the striker to adjust it.

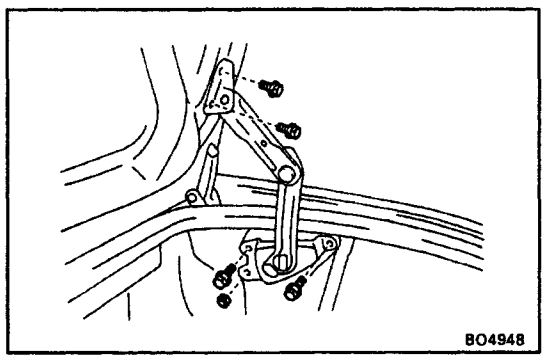

LUGGAGE COMPARTMENT DOOR BALANCER REMOVAL

B00BE-01

REMOVE LUGGAGE COMPARTMENT DOOR BALANCER

Remove four bolts, the nut and the balancer.

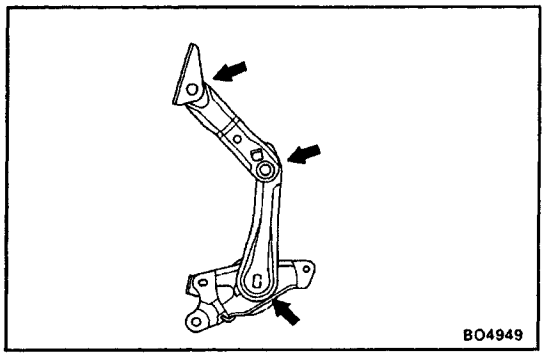

LUGGAGE COMPARTMENT DOOR BALANCER INSTALLATION

BO0BF–01

1. BEFORE INSTALLING PARTS. COAT THEM WITH MP GREASE

Apply MP grease to the sliding surface of the balan–cer.

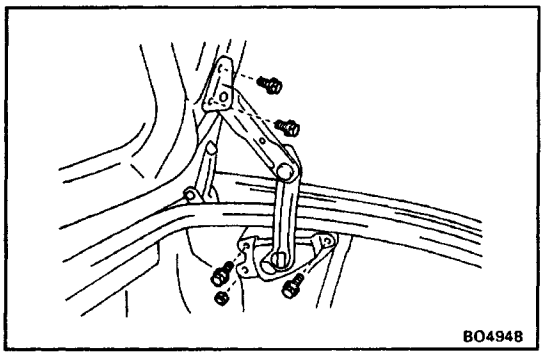

2. INSTALL LUGGAGE COMPARTMENT DOOR BAL–ANCER

Install the balancer with four bolts and the nut.

MOON ROOF

COMPONENTS

BO0CG–01

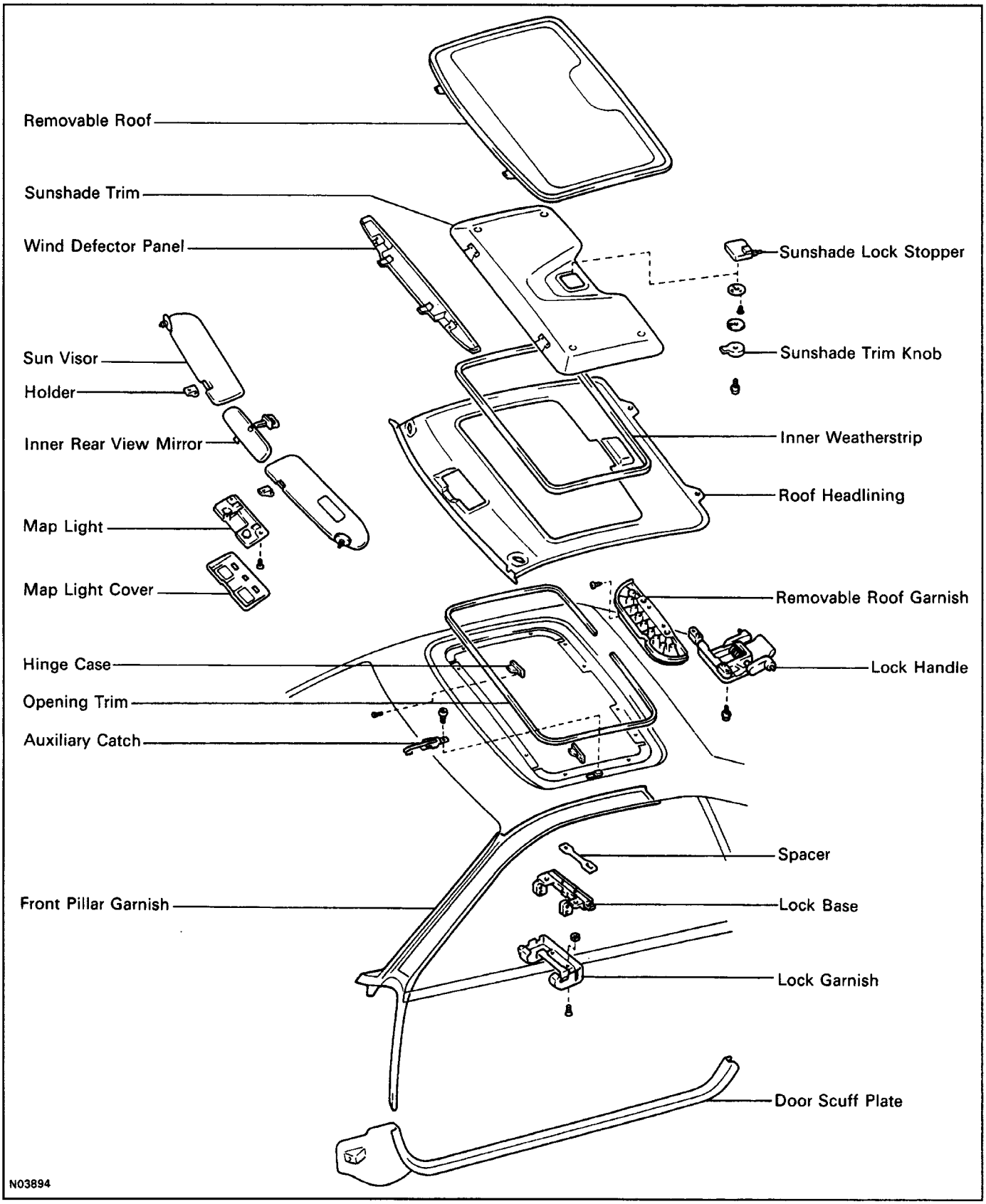

B00CH–01

ON–VEHICLE INSPECTION

INSPECT REMOVABLE ROOF ALIGNMENT

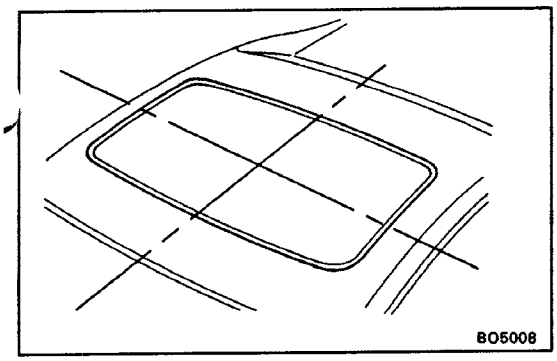

(a) With the removable roof installed, check for water leakage.

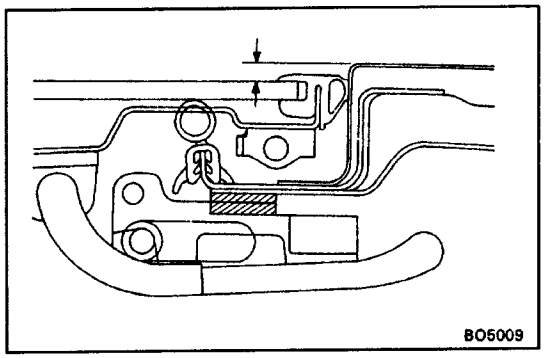

(b) Check for a difference in level between the removal roof and the roof panel.

Level:

1.4–4.2 mm (0.0669–0.1653 in.)

B00CJ–01

REMOVABLE ROOF ADJUSTMENT

1. DISCONNECT LOCK HANDLE FROM LOCK BASE

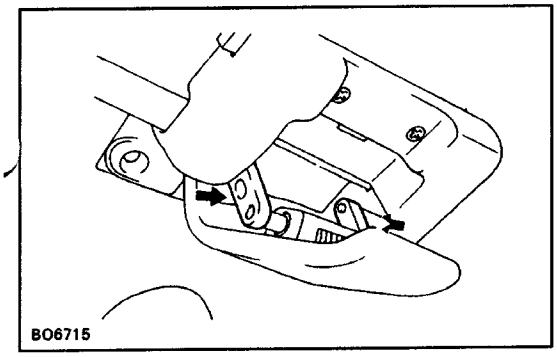

2. REMOVE LOCK GARNISH

Remove two screws and the lock garnish.

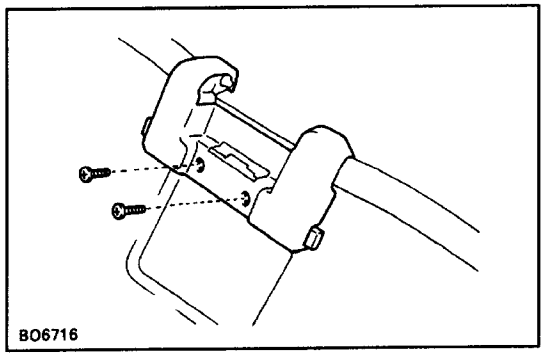

3. CONNECT LOCK HANDLE TO LOCK BASE

4. ADJUST REMOVABLE ROOF

(a) Remove two nuts and the lock base.

(b) Adjust by increasing or decreasing the number of spacers.

(c) Install the lock base with two nuts.

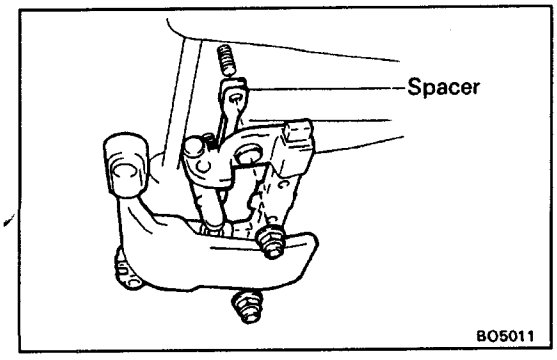

5. INSTALL LOCK GARNISH

Install the lock garnish with two screws.

B00GK–01

MOON ROOF REMOVAL

(See page BO–64)

1. REMOVE SUNSHADE TRIM

2. REMOVE DOOR SCUFF PLATE

(a) Remove the cap.

(b) Remove the scuff plate by pulling.

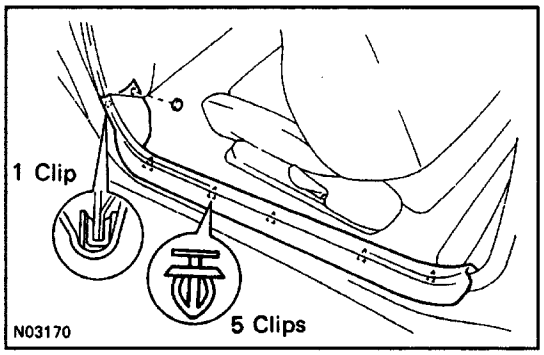

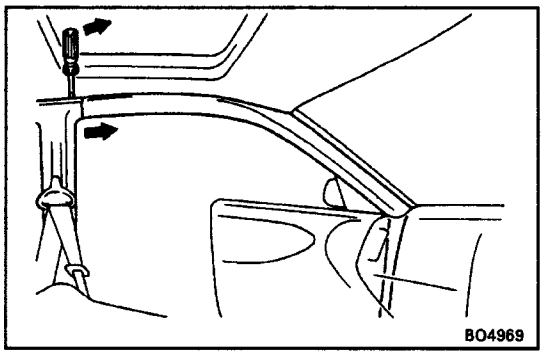

3. REMOVE FRONT PILLAR GARNISH

(a) Pull out the garnish from the roof side inner garnish.

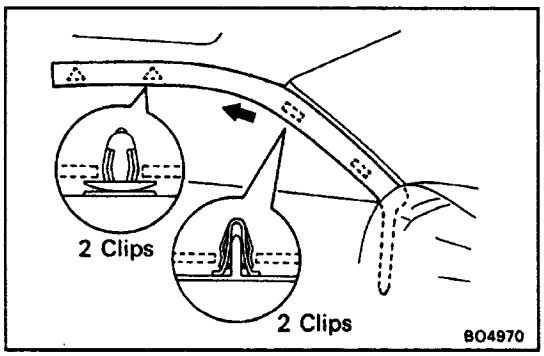

(b) Remove the clips.

(c) Pull the garnish rearward to remove it.

4. REMOVE FOLLOWING PARTS:

(See steps6 to 8 on page BO–42)

(a) Map light cover and map light

(b) Inner rear view mirror

(c) Sun visors and holders

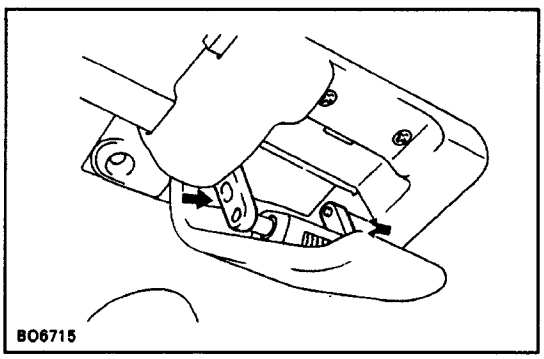

5. REMOVE REMOVABLE ROOF

(a) Disconnect the lock handle from the lock base.

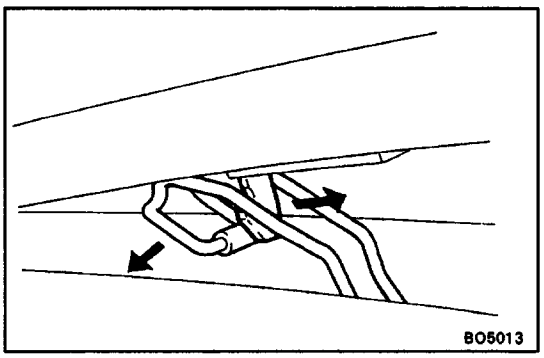

(b) Disconnect the auxiliary catch from the removable roof.

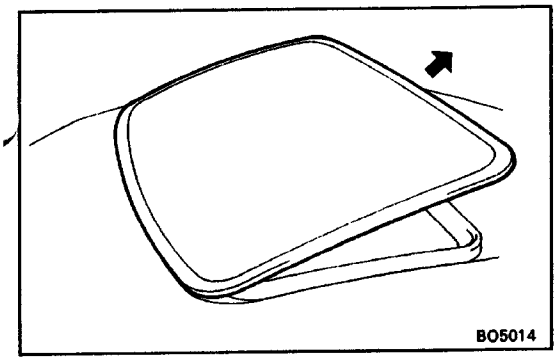

(c) Pull the removable roof rearward to remove it.

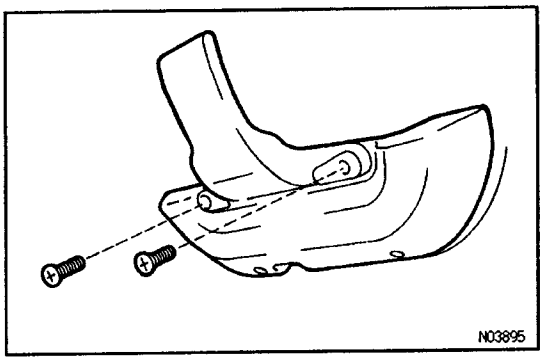

6. REMOVE LOCK HANDLE

Remove two screws and the lock handle from the removable roof.

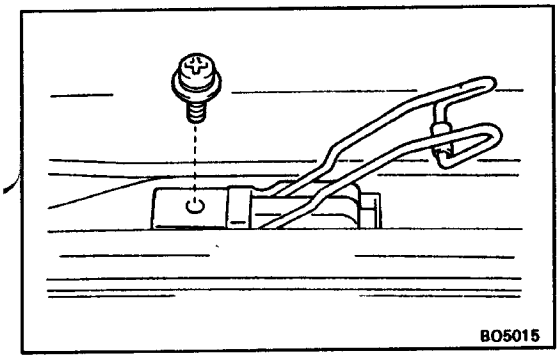

7. REMOVE AUXILIARY CATCH

Remove the screw and the catch.

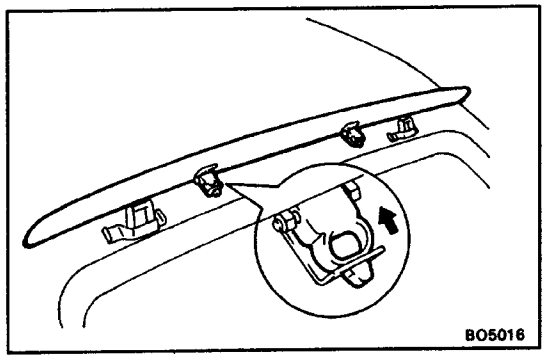

8. REMOVE WIND DEFLECTOR PANEL

Remove two deflector clips, while prying them with the screwdriver.

HINT: Tape the screwdriver tip before use.

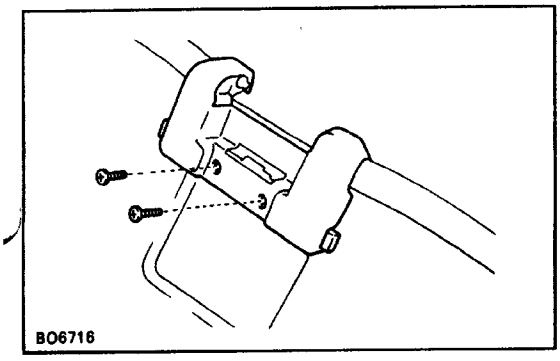

9. REMOVE LOCK GARNISH

Remove two screws and the lock garnish.

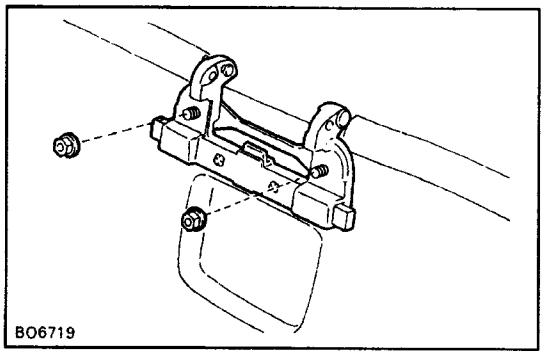

10. REMOVE LOCK BASE

Remove two nuts, the lock base and the spacers.

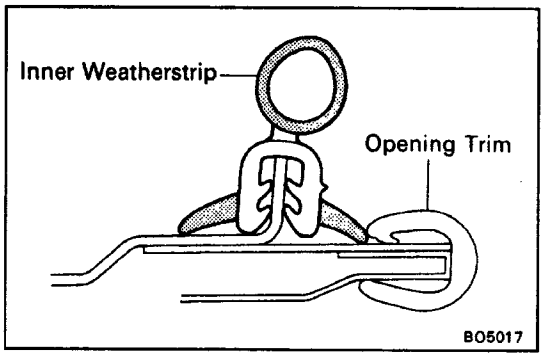

11. REMOVE OPENING TRIM

12. REMOVE INNER WEATHERSTRIP

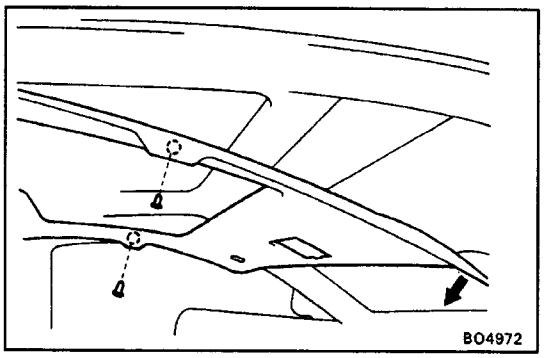

13. REMOVE HINGE CASE

(a) Remove two clips.

(b) Pull down the roof headlining by hand.

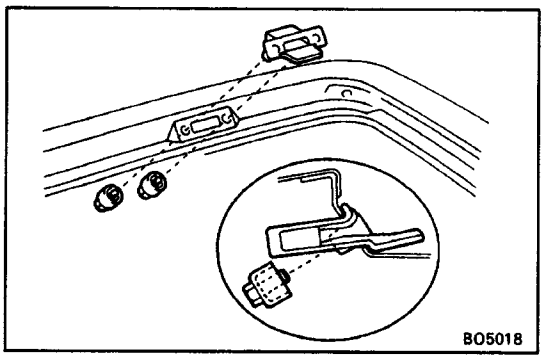

(c) Remove two bolts and the hinge case.

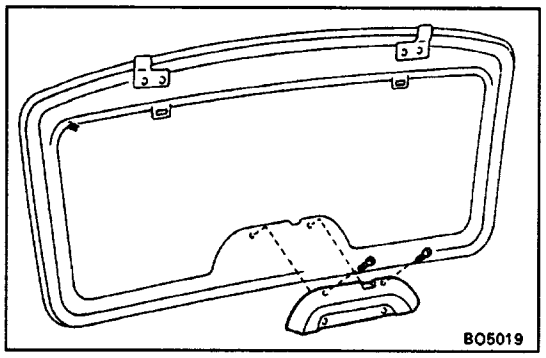

REMOVABLE ROOF AND SUNSHADE TRIM DISASSEMBLY

(See page BO–64)

1. REMOVE REMOVABLE ROOF GARNISH

Remove two screws and the garnish.

2. REMOVE SUNSHADE LOCK STOPPER

(a) Remove the screw and the sunshade trim knob.

(b) Remove two screws and the stopper.

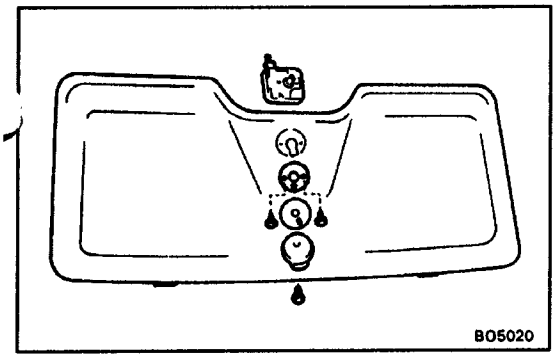

REMOVABLE ROOF AND SUNSHADE TRIM ASSEMBLY

(See page BO–64)

1. INSTALL REMOVABLE ROOF GARNISH

Install the garnish with two screws.

2. INSTALL SUNSHADE LOCK STOPPER

(a) Install the lock stopper with two screws.

(b) Install the sunshade trim knob with the screw.

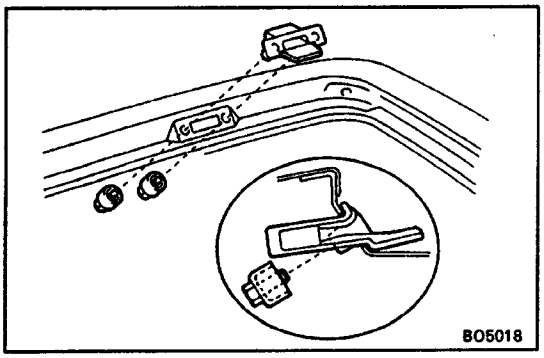

BOOGN–01

MOON ROOF INSTALLATION

(See page BO–64)

1. INSTALL HINGE CASE

Install the hinge case with two bolts.

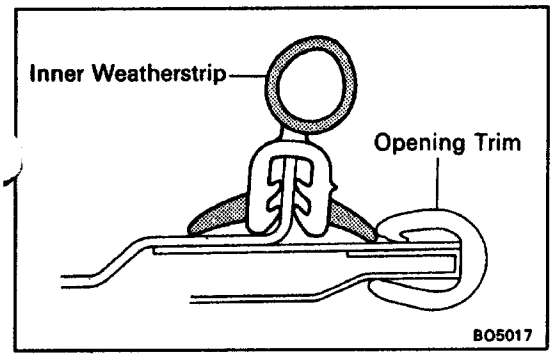

2. INSTALL INNER WEATHERSTRIP

3. INSTALL OPENING TRIM

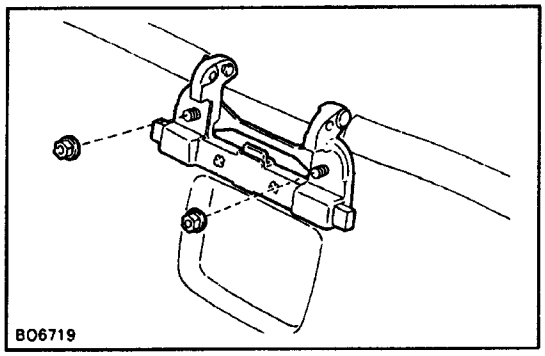

4. INSTALL LOCK BASE

Install the spacers and the lock base with two nuts.

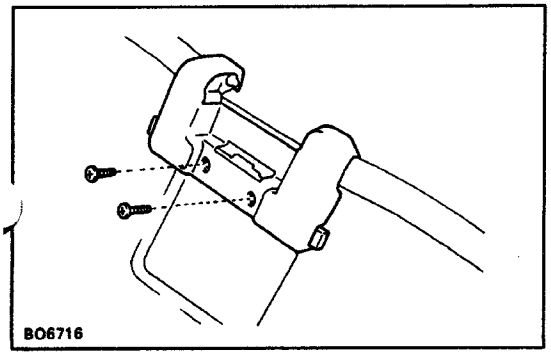

5. INSTALL LOCK GARNISH

Install the garnish with two screws.

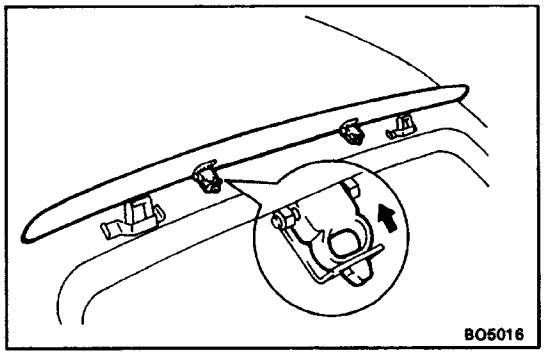

6. INSTALL WIND DEFLECTOR PANEL

Slide the deflector clip rearward and tap the clip to install it.

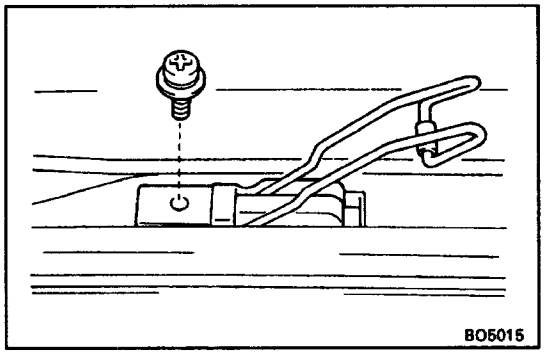

7. INSTALL AUXILIARY CATCH

Install the catch with the screw.

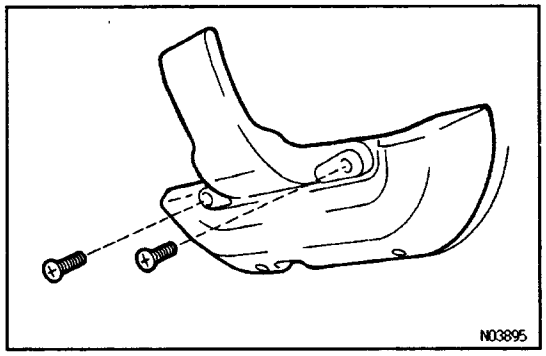

8. INSTALL LOCK HANDLE

Install the lock handle with two screws to the re–movable roof.

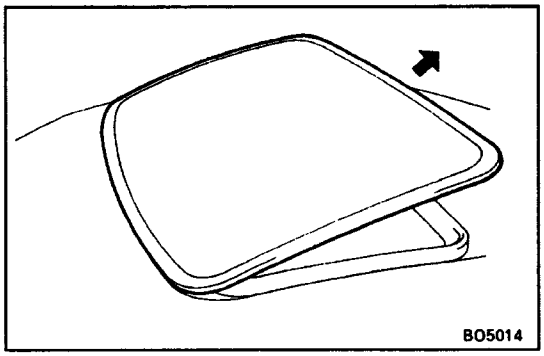

9. INSTALL REMOVABLE ROOF

(a) Place the removable roof onto the roof.

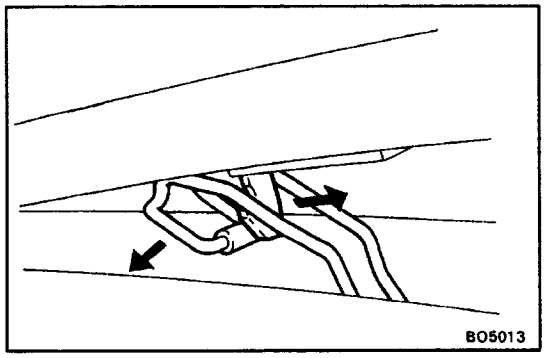

(b) Connect the auxiliary catch to the removable roof.

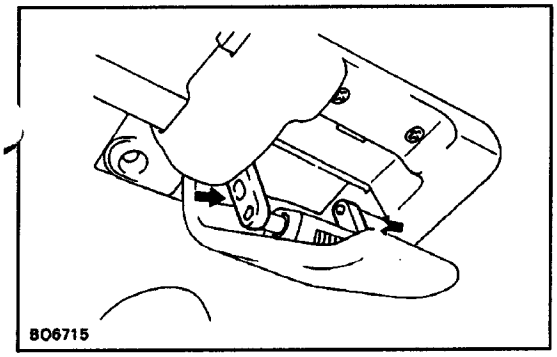

(c) Connect the lock handle to the lock base.

10. INSTALL FOLLOWING PARTS:

- Front pillar garnish
- Inner rear view mirror
- Sunvisors and holders
- nterior light
- Card holder
- Assist glip
- Coat hook

11. ADJUST REMOVABLE ROOF
(See page BO–65)

12. INSTALL SUNSHADE TRIM

PREPARATION

BO01R–02

SST (SPECIAL SERVICE TOOLS)

	09812–00010 Door Hinge Set Bolt Wrench	

BO01S–01

LUBRICANT

Item	Capacity	Classification
MP grease	–	–

BO01T–04

SSM (SPECIAL SERVICE MATERIALS)

08850–00065 Butyl Tape set	Body outside Moulding Quarter Window Glass
08850–00070 Windshield glass adhesive set No. 15 or equivalent	Windshield Back Window Glass (0–15˚C Or 32 –59˚ F)
08850–00080 Windshield glass adhesive set No.35 or equivalent	Windshield Back Window Glass (15–35˚C or 59–95˚F)
08850–00090 Windshield glass adhesive set No.45 or equivalent	Windshield Back Window Glass (35–45˚C or 95–113˚F)
08833–00030 Auto glass sealer or equivalent	Windshield Moulding
08850–00051 Adhesive (Super Special) or equivalent	Side Protection Moulding

Ambient temperature	Part No.	Part Name
0 – 15˚C (32 – 59˚F)	oaaso– ooo7o	Windshield glass adhesive set No. 15
15 – 35˚C 159 – 95˚FY	oesso– oooso	Windshield glass adhesive set No. 35
35 – 45˚C (95 – 113˚F)	088b0–00090	Windshield glass adhesive set No. 45

V00250

1. CHOOSE SUITABLE ADHESIVE SET

Use an adhesive set suitable for the ambient tem–perature.

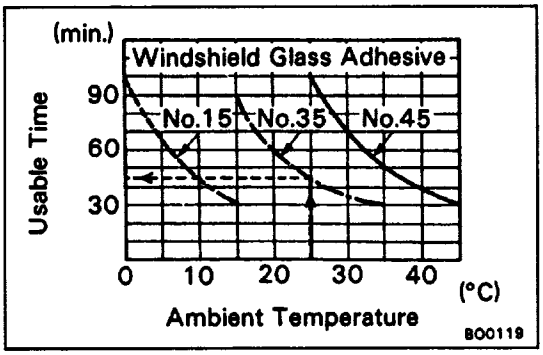

2. CHECK ADHESIVE USABLE TIME

After mixing main and hardening agents, finish glass installation within the specified time as shown.
Example: For glass installation in an ambient temper–ature of 25˚ C (77˚ F), apply adhesive set No.35 within 45 minutes.

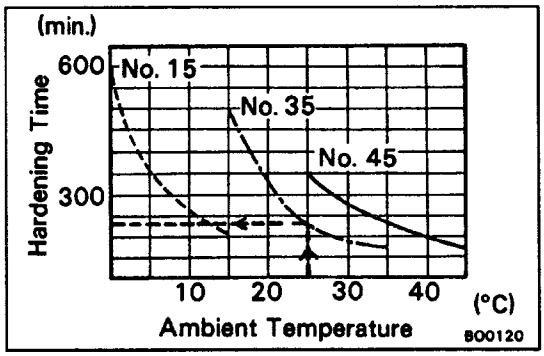

3. CHECK ADHESIVE HARDENING TIME

After main and hardening agents are mixed, leak tests should be made only after the hardening time has elapsed.
Example: The hardening time for adhesive set No.35 with and ambient temperature of 25˚C (77˚F) is 2.5 hours.

NOTICE: Do not drive the vehicle until at least double the hardening time has elapsed.

QUARTER WINDOW GLASS

B00C1–01

COMPONENTS

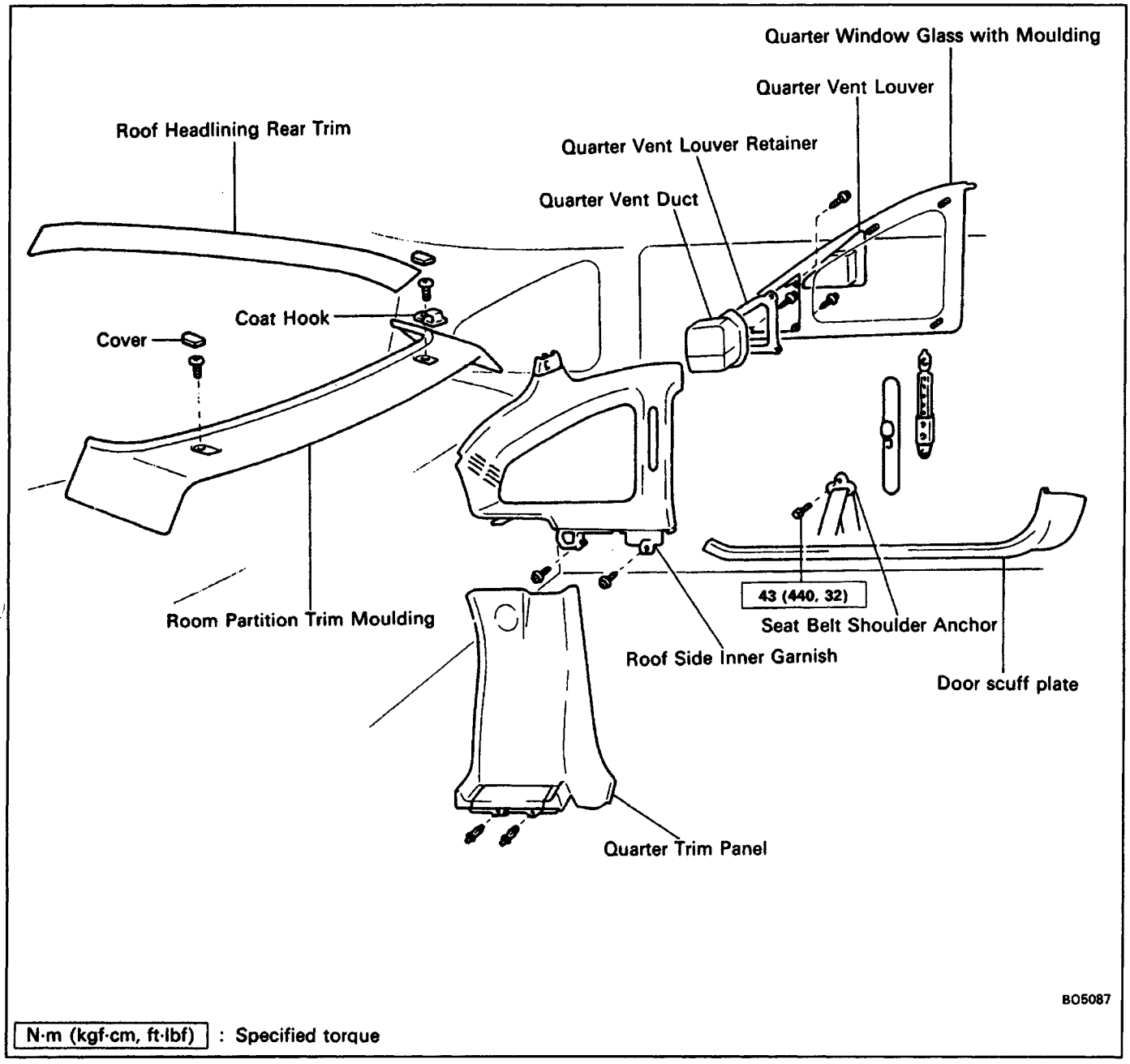

N·m (kgf·cm, ft·lbf) : Specified torque

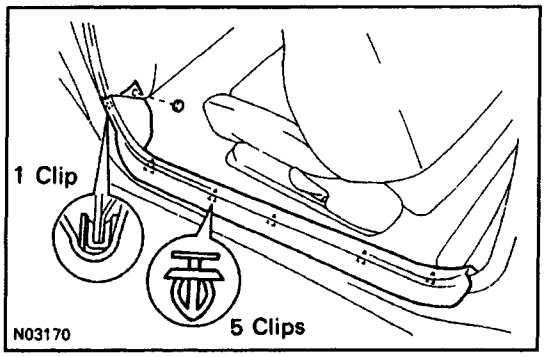

B00C2–01

QUARTER WINDOW GLASS REMOVAL

1. REMOVE DOOR SCUFF PLATE

(a) Remove the cap.

(b) Remove the scuff plate by pulling.

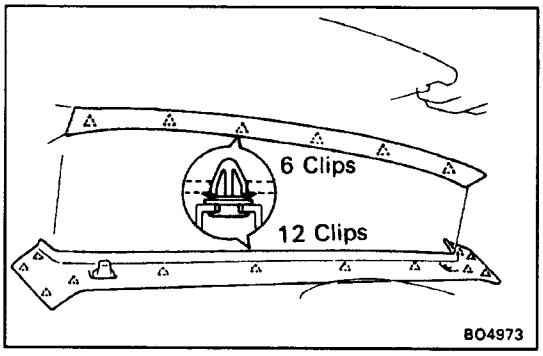

2. REMOVE ROOF HEADLINING REAR TRIM

Remove the trim by pulling.

3. REMOVE ROOM PARTITION TRIM MOULDING

(a) Remove two covers.
(b) Remove two screws and the hook.
(c) Remove the moulding by pulling.

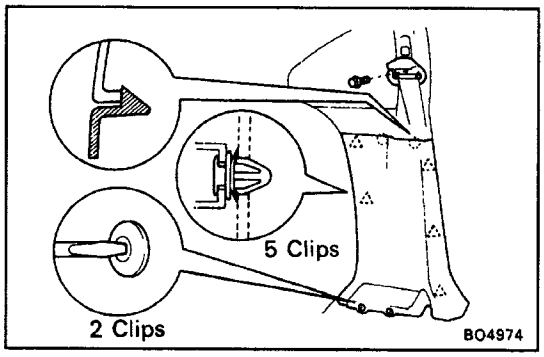

4. REMOVE QUARTER TRIM PANEL

(a) Remove two clips.
(b) Using the screwdriver, pry loose the clips.
HINT: Tape the screwdriver tip before use.
(c) Remove the quarter trim by pulling.

5. REMOVE SEAT BELT SHOULDER ANCHOR

Remove the bolt and the shoulder anchor.

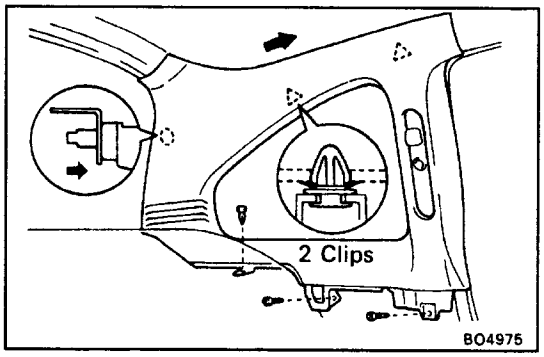

6. REMOVE ROOF SIDE INNER GRANISH

(a) Remove the clip and two screws.
(b) Using the screwdriver, pry loose the clips.
HINT: Tape the screwdriver tip before use.
(c) Pull the garnish forward to remove it.

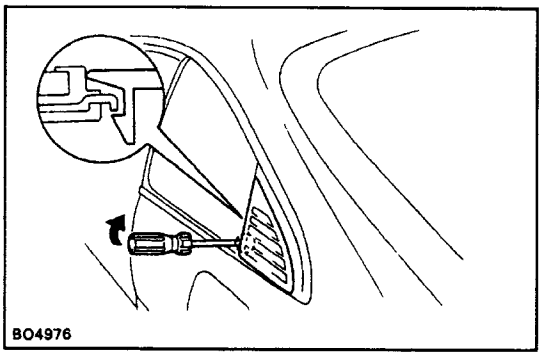

7. REMOVE QUARTER VENT LOUVER

Using the screwdriver, remove the louver.
HINT: Tape the screwdriver tip before use.

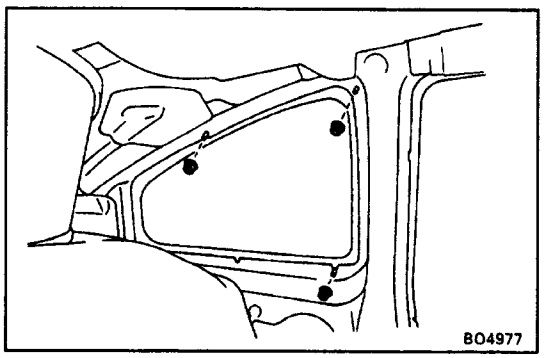

8. REMOVE QUARTER WINDOW GLASS WITH MOU–LDING

(a) Remove three nuts.

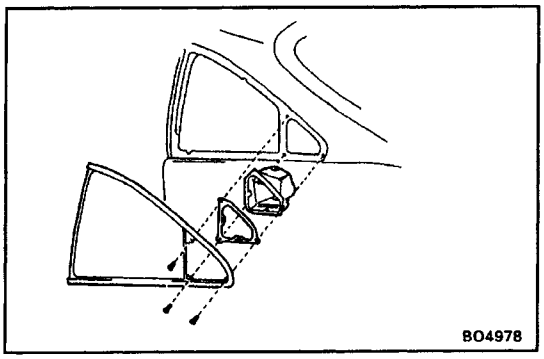

(b) Remove three screws.
(c) Using a knife, cut loose the adhesive.
(d) Remove the glass with moulding.
NOTICE: Do not damage the body.

9. REMOVE QUARTER VENT LOUVER RETAINER

10. REMOVE QUARTER VENT DUCT

BO0C3–01

QUARTER WINDOW GLASS INSTALLATION

(See page BO–47)

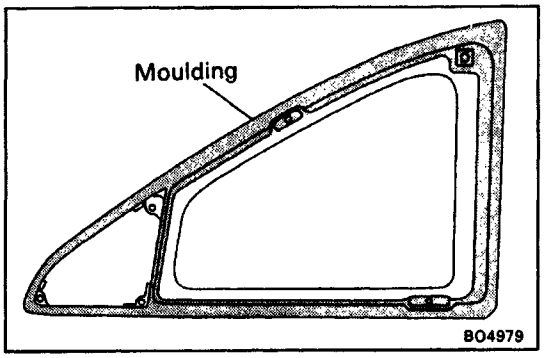

1. CLEAN BODY OR GLASS

Wipe off any adhesive left on the body or moulding with cleaner.

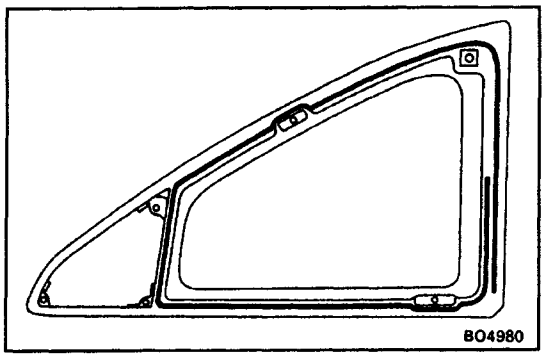

2. APPLY ADHESIVE AT MOULDING INSTALLATION AREA

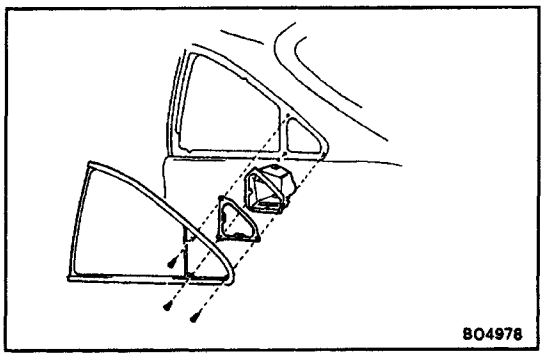

3. INSTALL QUARTER VENT DUCT

4. INSTALL QUARTER VENT LOUVER RETAINER

5. INSTALL QUARTER WINDOW GLASS WITH MOU–LDING

(a) Install the glass with moulding to the body.
(b) Install three screws.

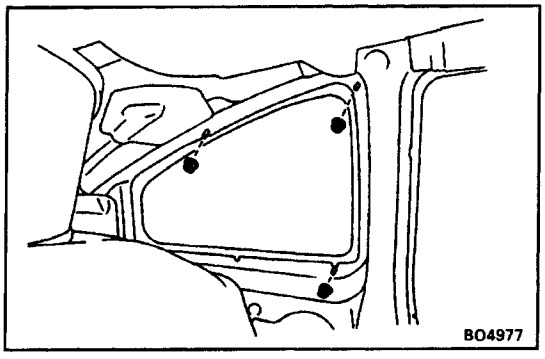

(c) Install three nuts.

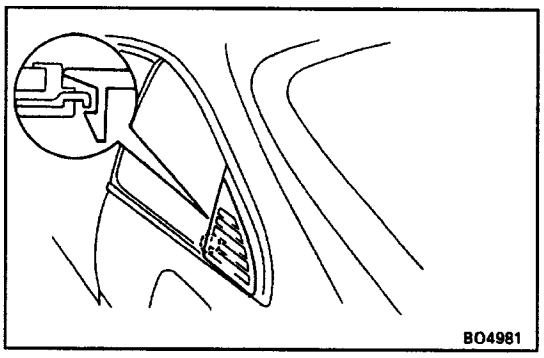

6. INSTALL QUARTER VENT LOUVER
Push in the louver to install it.

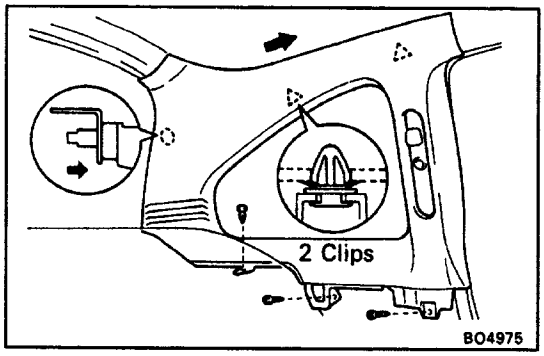

7. INSTALL ROOF SIDE INNER GARNISH
(a) Slide the garnish rearward and tap the granish to install it.
(b) Install two screws and the clip.

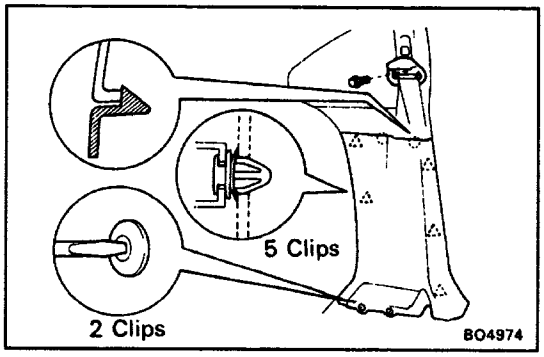

8. INSTALL SEAT BELT SHOULDER ANCHOR
Install the shoulder anchor with the bolt.
Torque: 43 N–m (440 kgf–cm, 32 ft–lbf)

9. INSTALL QUARTER TRIM PANEL
(a) Tap the panel to install it.
(b) Install two clips.

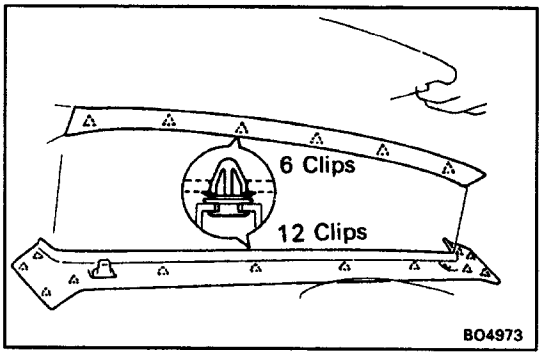

10. INSTALL ROOM PARTITION TRIM MOULDING
11. INSTALL ROOF HEADLINING REAR TRIM
12. INSTALL DOOR SCUFF PLATE

REAR BUMPER

B0084–01

COMPONENTS

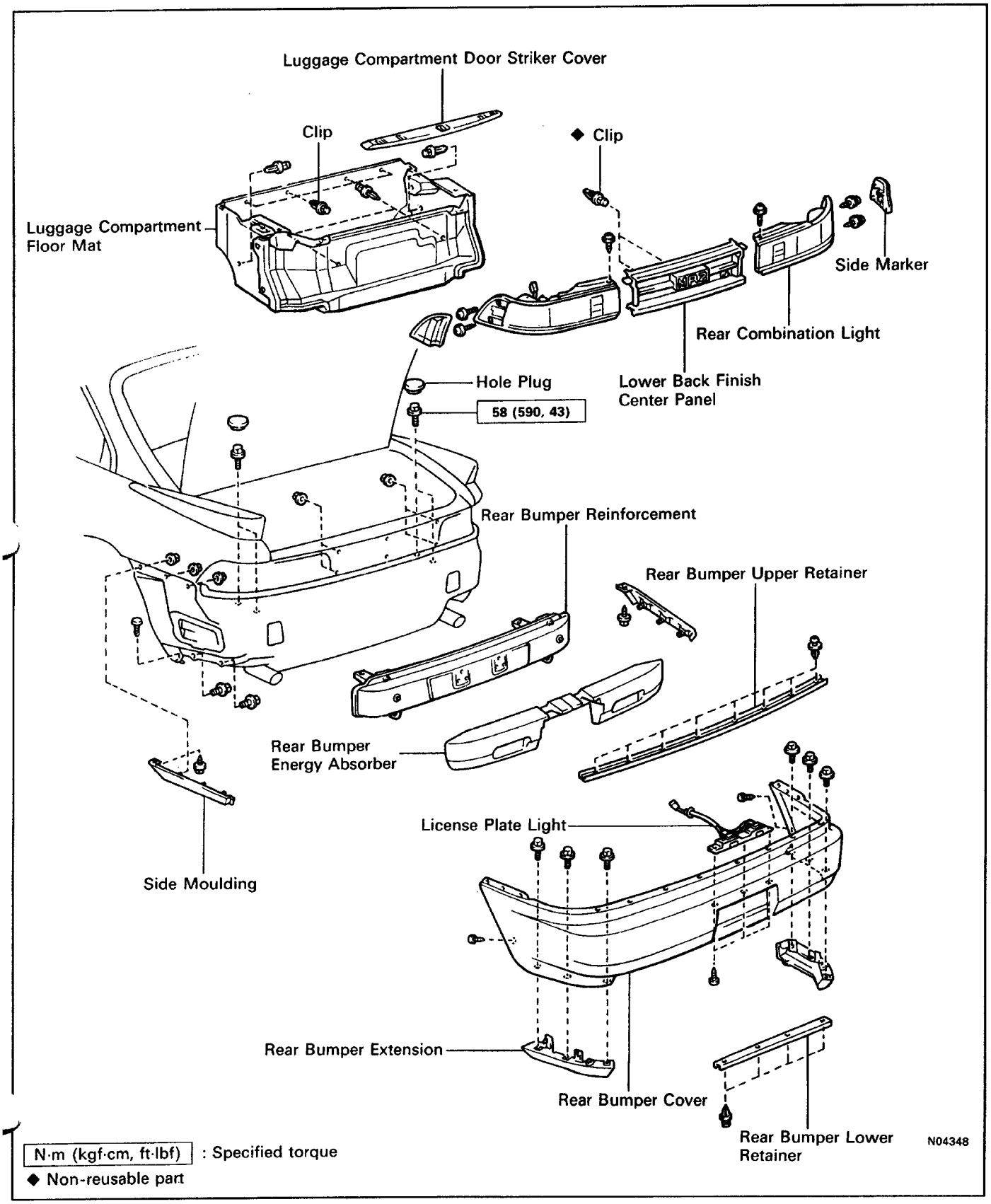

N·m (kgf·cm, ft·lbf) : Specified torque

◆ Non-reusable part

SEAT

BO0CS–01

COMPONENTS

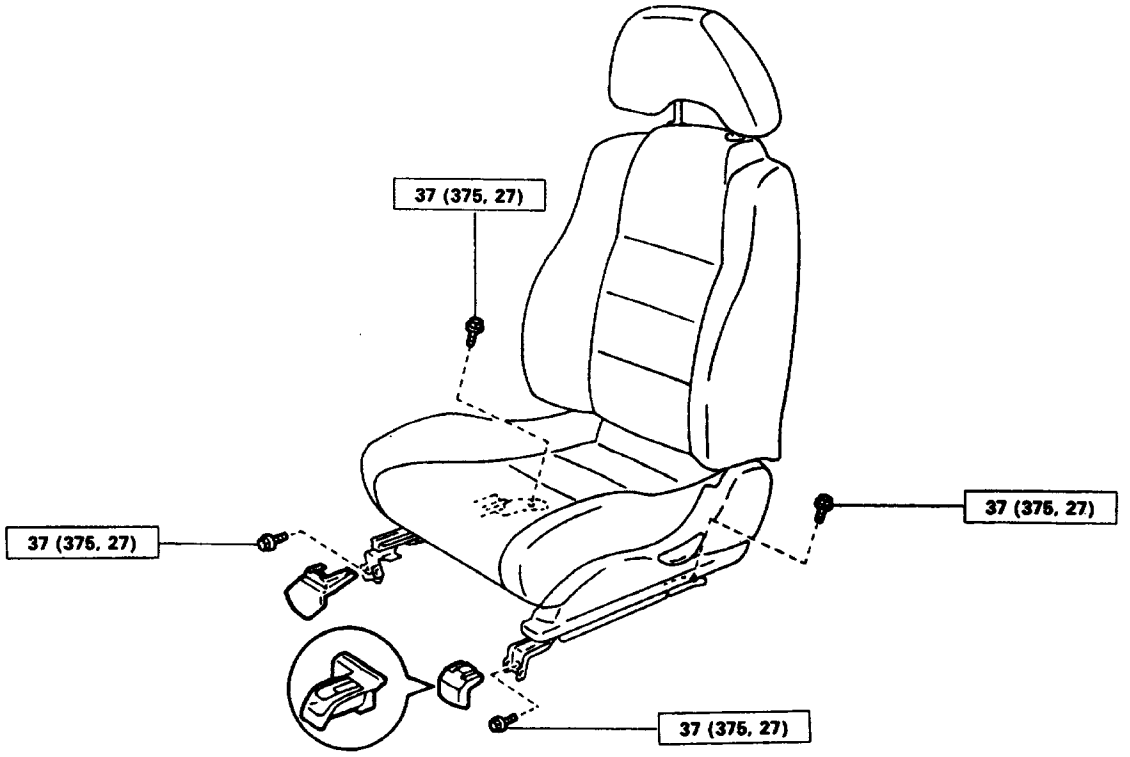

N·m (kgf·cm, ft·lbf) : Specified torque

SEAT BELT

BO0CT–01

COMPONENTS

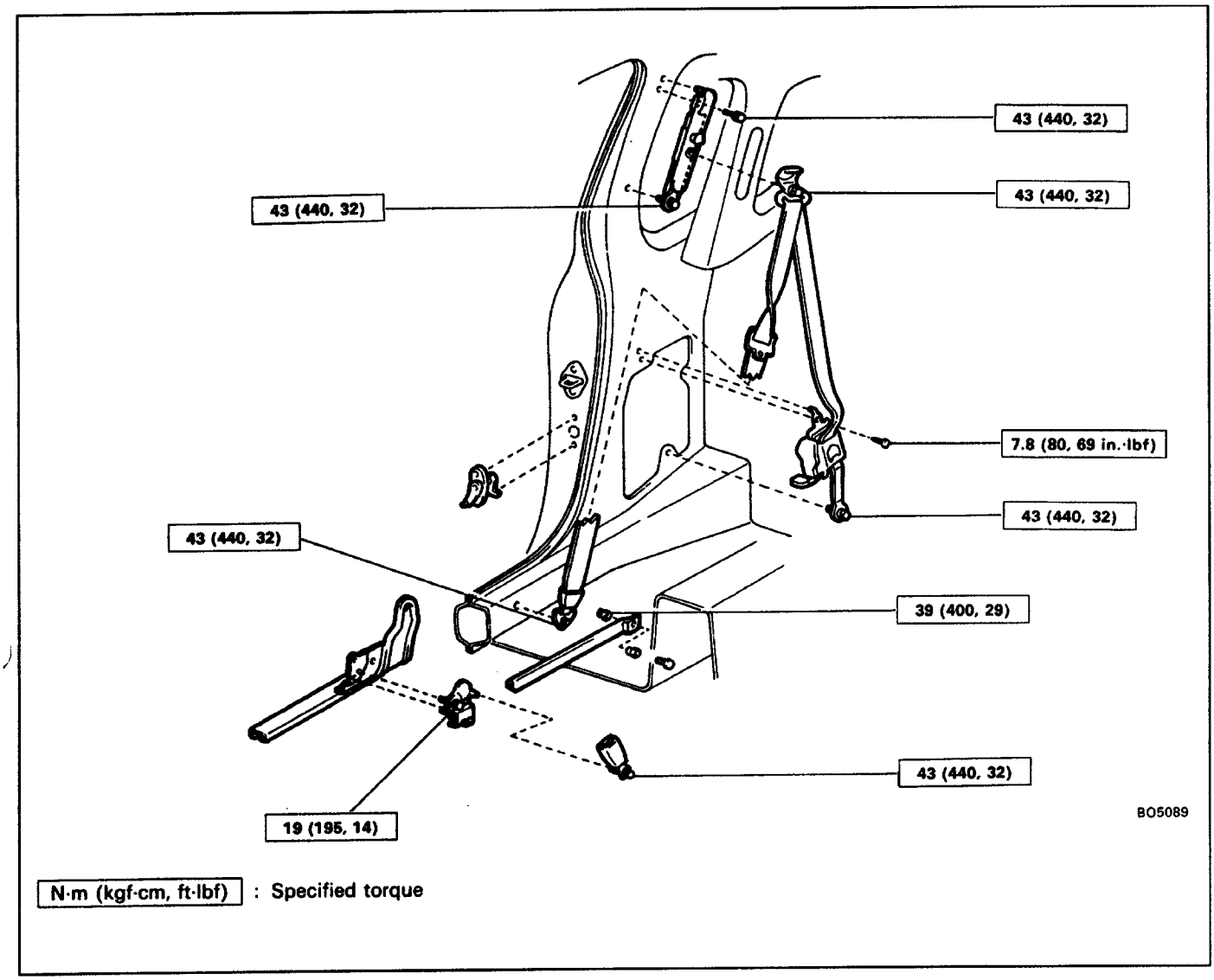

N·m (kgf·cm, ft·lbf) : Specified torque

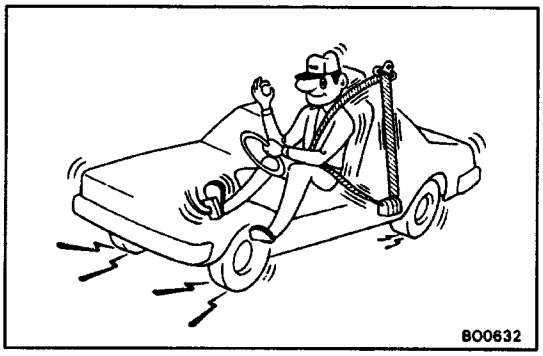

BO0CU–01

SEAT BELT INSPECTION

[Emergency Locking Retractor (ELR) Type]

1. RUNNING TEST (IN SAFE AREA)

(a) Fasten the front seat belts.

(b) Drive the car at 10 mph (16 km/h) and make a very hard stop.

(c) Check that the belt is locked and cannot be extended at this time.

HINT: Conduct this test in a safe area. If the belt does not lock, remove the belt mechanism assembly and conduct the following static check. Also, whenever installing a new belt assembly, verify the proper op–eration before installation.

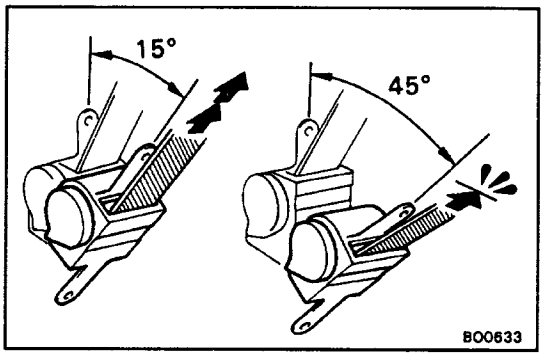

2. STATIC TEST

(a) Verify that the belt locks when pulled out quickly.

(b) (Passenger's belt only)
Verify that the belt cannot be pulled out further once you pull it out and allow it to retract a little.

(c) Remove the locking retractor assembly.

(d) Tilt the retractor slowly.

(e) Verify that the belt can be pulled out at a tilt of 15 degrees or less, and cannot be pulled out at over 45 degrees of tilt.
If a problem is found, replace the assembly.

SERVICE SPECIFICATIONS

B003J–02

TORQUE SPECIFICATIONS

Part tightened	N–m	kgf–cm	ft–lbf
FRONT BUMPER	–	–	–
Front bumper reinforcement x Body	58	590	43
Front bumper reinforcement x Foglamp bracket	58	590	43
REAR BUMPER	–	–	–
Rear bumper reinforcement x Body	52	530	38
SEAT	–	–	–
Seat adjuster x Body	37	375	27
SEAT BELT	–	–	–
Shoulder anchor x Adjustable anchor	43	440	32
Adjustable anchor x Body	43	440	32
ELR x Body	43 9.8	440 80	32 69in.·lbf
Backle x Seat	43	440	32
Anchor plate x Body	39	400	29
Bracket x Seat	–	–	–

SIDE PROTECTION MOULDING

Precautions for storing moulding material: B00BS–01

- Store in cool place, avoiding direct sunlight, high temperature and dust.
- The moulding is of polyvinyl chloride, so do not allow it to come in contact with thinner or other solvent, open flame, or boiling water.
- The storage time for the moulding and adhesive are limited to about 9 months.

COMPONENTS

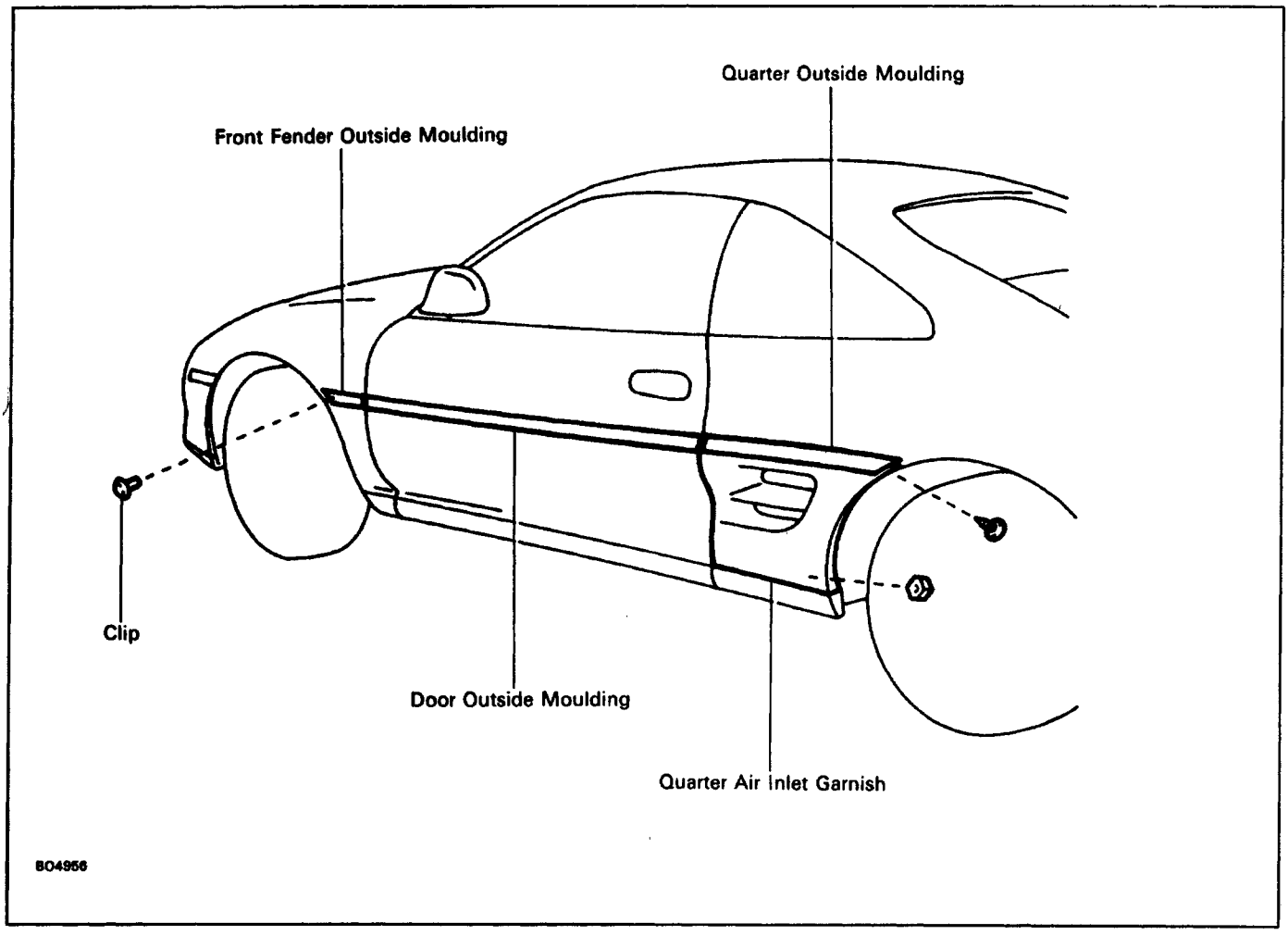

SIDE PROTECTION MOULDING REMOVAL

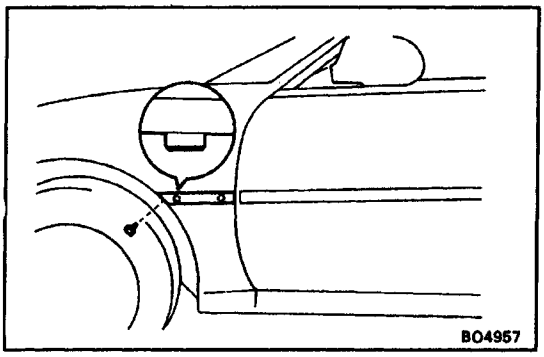

1. REMOVE FRONT FENDER OUTSIDE MOULDING

(a) Using the clip remover, remove the clip from the moulding.

(b) Pul1 oft the moulding by cutting the adhesive with a knife.

(See step 3 on page BO–36**)**

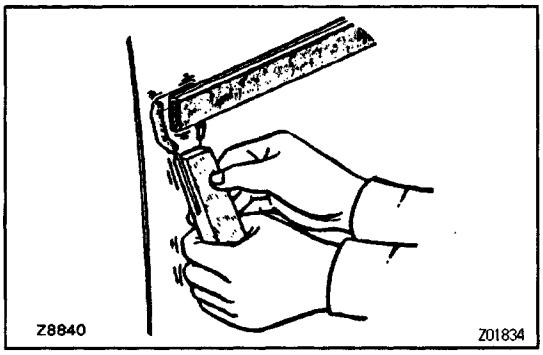

2. REMOVE ENDS OF MOULDING

Using a scraper, pry the moulding loose about 30 mm (1.18 in.) from the ends.

HINT: Tape the scraper tip before use.

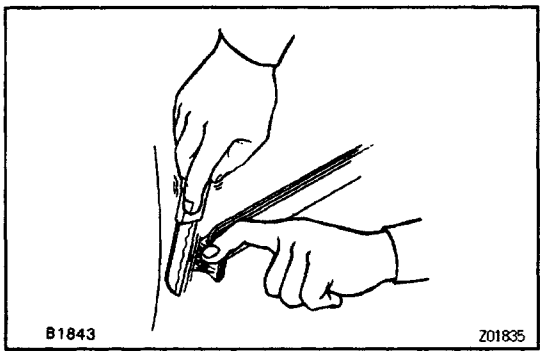

3. REMOVE MOULDING AND ADHESIVE

(a) Pull off the moulding by cutting the adhesive with a knife.

(b) Scrape off adhesive from the body with a cutter of sandpaper.

NOTICE:

- **Remember that 30–80 mm (1.18–3.15 in.) of the ends of the moulding are glued tightly with a strong adhesive.**
- **Do not reuse moulding.**

4. REMOVE DOOR OUTSIDE MOULDING

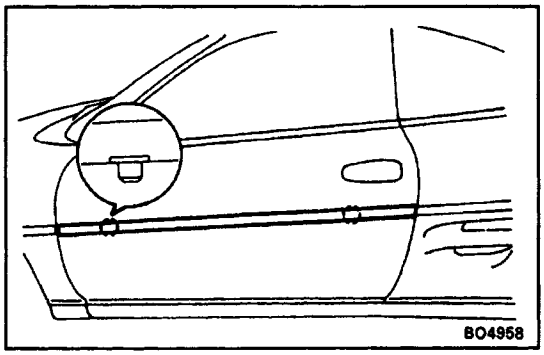

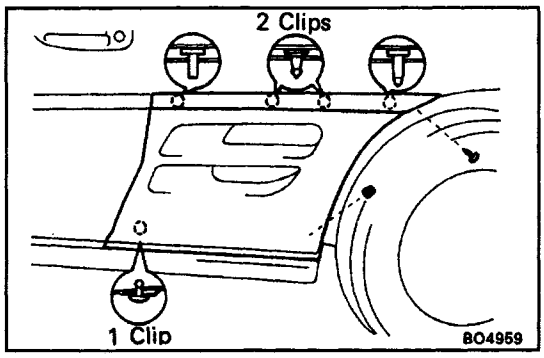

5. REMOVE QUARTER OUTSIDE MOULDING

Remove the screw and the moulding.

6. REMOVE QUARTER AIR INLET GARNISH

(a) Remove the nut.

(b) Insert the screwdriver between the garnish and the panel to pry out, and remove it.

HINT: Tape the screwdriver tip before use.

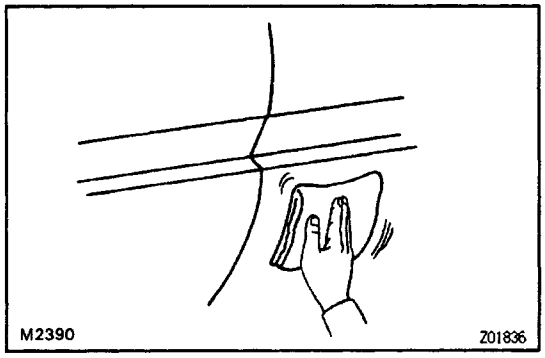

SIDE PROTECTION MOULDING INSTALLATION

BO08U–01

(See page BO–35)

1. CLEAN MOULDING MOUNTING SURFACE

Wipe off stains with cleaner.

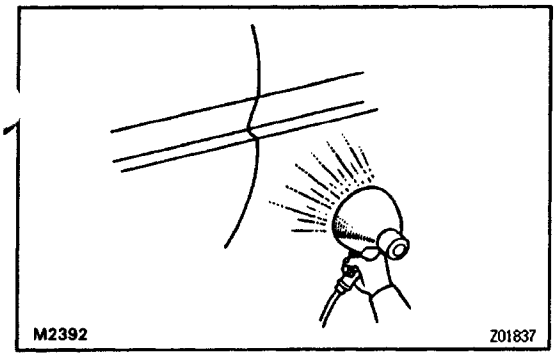

2. HEAT BODY MOUNTING SURFACE

Using a heat light, heat the body mounting surface to 30–50˚C (86–122˚F).

NOTICE: When the moulding is installed, the temperature of the mounting surface should be 20˚ C (68˚F) or higher.

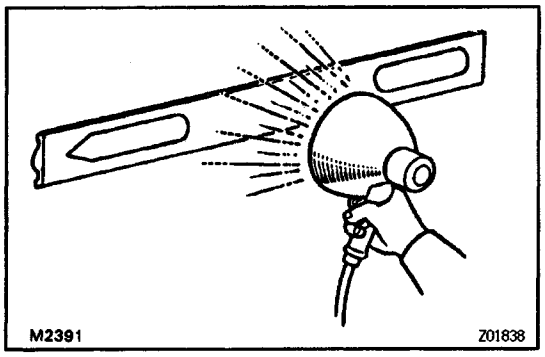

3. HEAT MOULDING

Using a heat light, heat the moulding to 30–60˚C (86 –140˚ F).

NOTICE: Do not heat moulding excessively. The temperature shouid not be higher than 80˚ C (176˚ F).

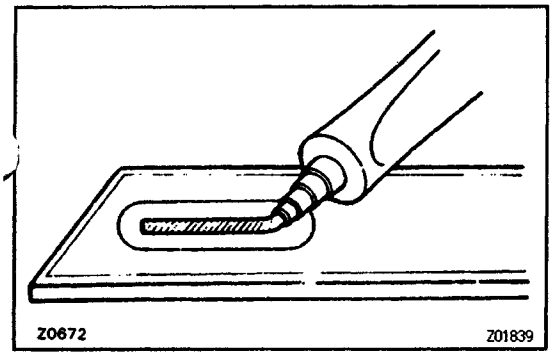

4. APPLY ADHESIVE TO DOOR OUTSIDE MOULDING

Apply adhesive to both punched out ends of the moulding.

NOTICE: Install the moulding within 7 minutes after applying the adhesive.

5. LIFT MOULDING RELEASE SHEET FROM FACE OF MOULDING

NOTICE: When the moulding release sheet is removed, be sure that no dirt or dust can get onto the uncoated area.

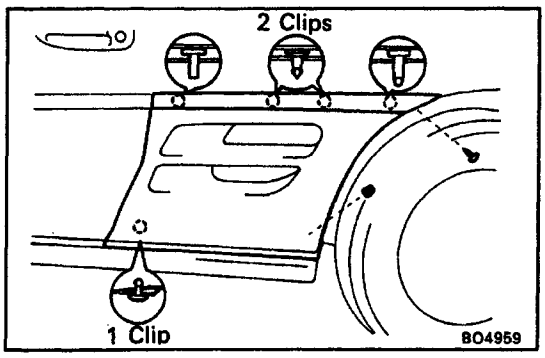

6. INSTALL QUARTER AIR INLET GARNISH

(a) Tap the garnish and fix it in place with the clip.

(b) Install the nut.

7. INSTALL MOULDING ALONG BODY PRESS LINE

(a) Align the bosses on the moulding with the body holes, and push the moulding to the body.

(b) Install the screw to the quarter outside moulding.

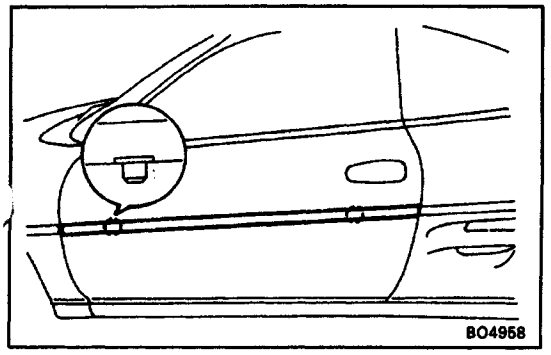

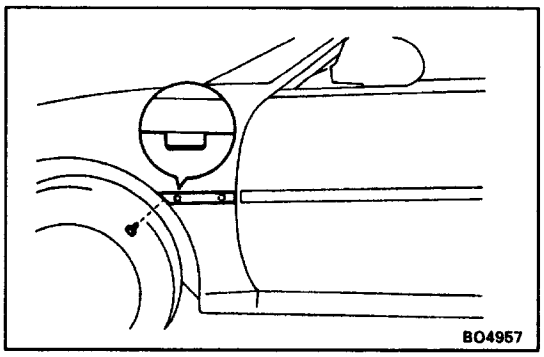

(c) Install the clip to the front fender outside moulding.

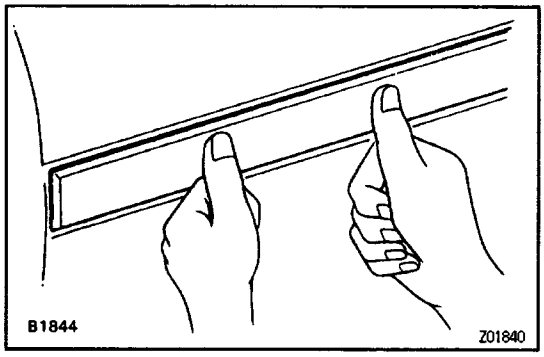

NOTICE:

- **Be sure that the body and moulding are heated to the proper temperature.**
- **Do not depress the adhesive–coated parts excessively just hold them down with your thumb.**
- **Scrape off any overflowing adhesive with a plastic spatula and clean the surface with a dry rang.**
- **After installation, do not wash the vehicle for 24 hours.**

T–BAR ROOF

COMPONENTS

B00C7–01

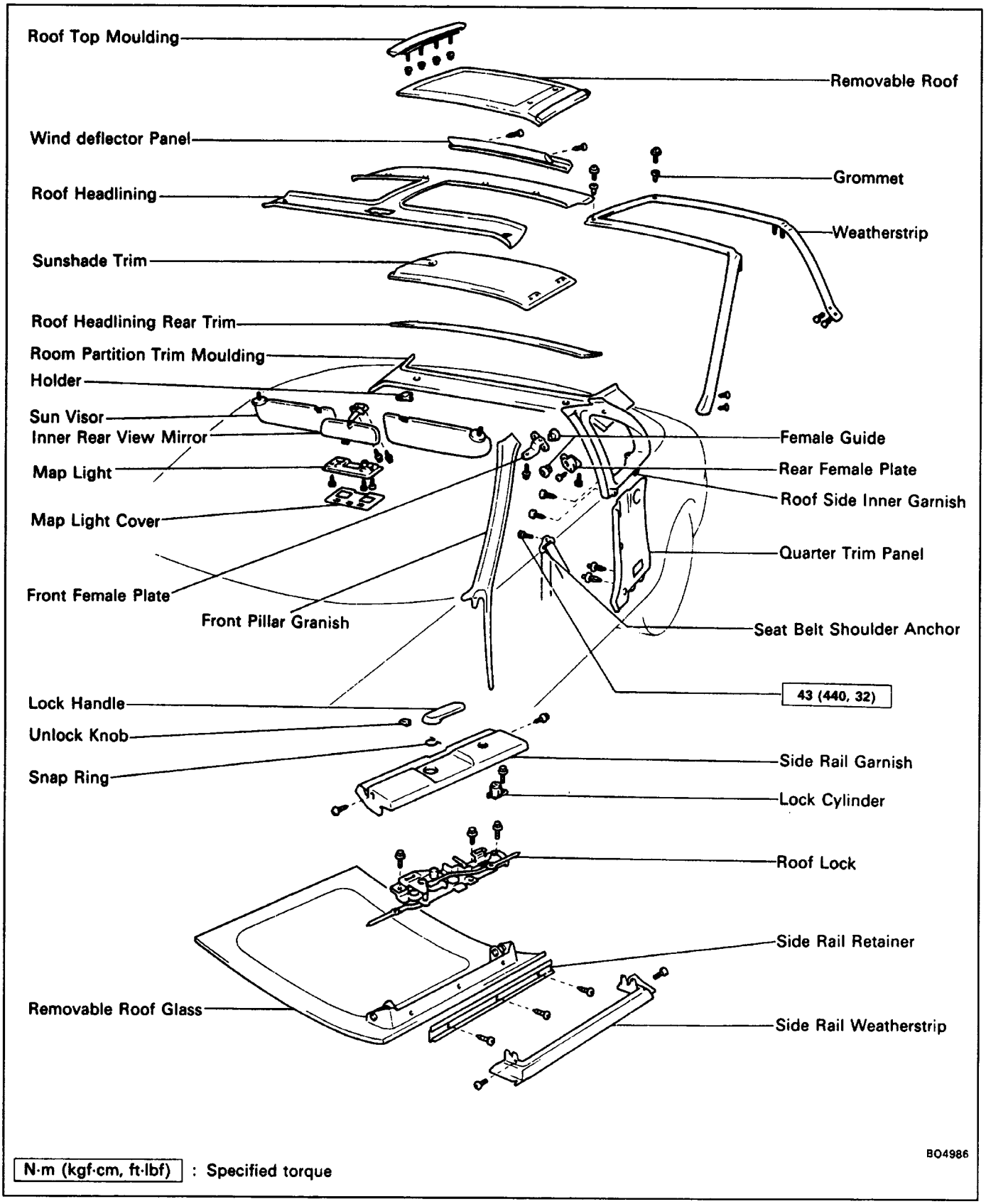

N·m (kgf·cm, ft·lbf) : Specified torque

BO0C8–01

ON VEHICLE INSPECTION

INSPECT REMOVABLE ROOF ALIGNMENT

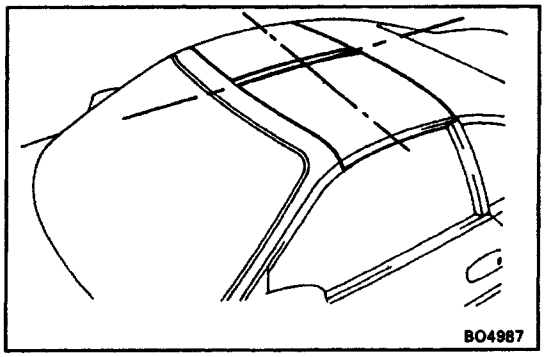

(a) With the removable roof installed, check for washer leakage.

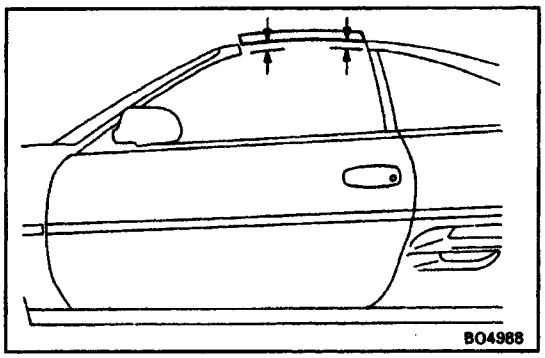

(b) Check for a difference in level between the removable roof glass and the roof panel.

Level:

0±1.4 mm (0±0.055 in.)

BO0C9–01

REMOVABLE ROOF ADJUSTMENT

1. REMOVE FOLLOWING PARTS:

(See steps 1, 2 and 5 on page BO–58)

(a) Lock handle and unlock knob
(b) Side rail garnish
(c) Lock guide

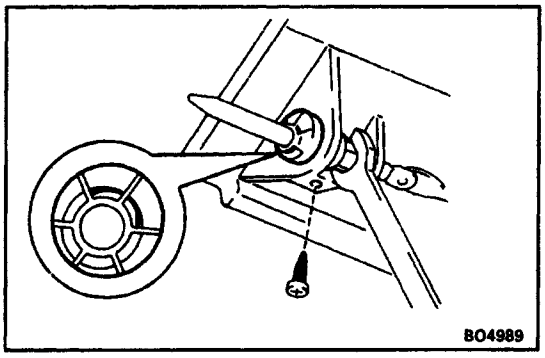

2. ADJUST REMOVABLE ROOF

HINT: There are two types of lock guides, one with the hole centered, and the other with its hole 1.5 mm (0.059 in.) off center. Depending on the installation position in which the off center hole is installed, the removable roof can be adjusted in four direction.

(a) With the removable roof installed, turn the lock guide with the spanner in order to adjust the lock guide.
(b) Install the screw.

3. INSTALL FOLLOWING PARTS:

(See steps 9 and 10 on page BO–61)

(a) Side rail granish
(b) Lock handle and unlock knob

B00CA–01

T– BAR ROOF REMOVAL

(See page BO–54)

1. REMOVE REMOVABLE ROOF AND SUNSHADE TRIM

2. REMOVE DOOR SCUFF PLATE

(a) Remove the cap.

(b) Remove the scuff plate by pulling.

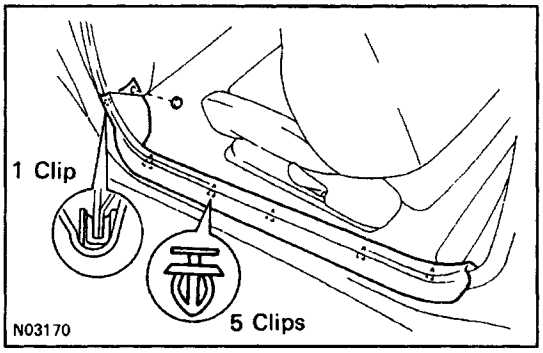

3. REMOVE FRONT PILLAR GARNISH

(a) Remove the clips.

(b) Pull the garnish rearward to remove it.

4. REMOVE FOLLOWING PARTS:
(See steps 6 to 8 on page BO–42)

(a) Map light cover and map light

(b) Inner rear view mirror

(c) Sun visors and holders

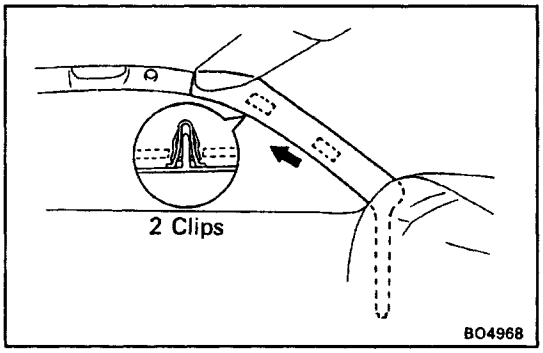

5. REMOVE FEMALE GUIDE

Using the screwdriver, remove the female guide from the rear female plate.

HINT: Tape the screwdriver tip before use.

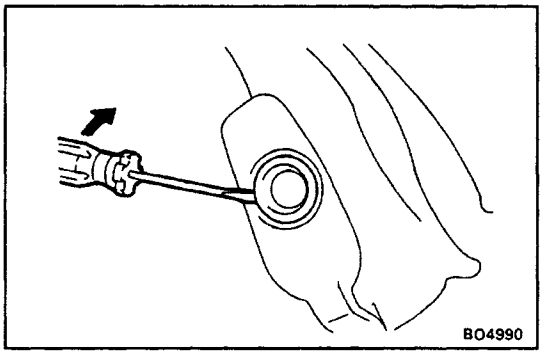

6. REMOVE FOLLOWING PARTS:
(See steps 2 to 6 on page BO–48)

(a) Roof headlining rear trim

(b) Room partition trim moulding

(c) Quarter trim panel

(d) Seat belt shoulder anchor

(e) Roof side inner garnish

7. REMOVE ROOF HEADLINING

(a) Remove two clips.

(b) Using the screwdriver, pry loose the clips.
HINT: Tape the screwdriver tip before use.

(c) Remove the roof headlining.

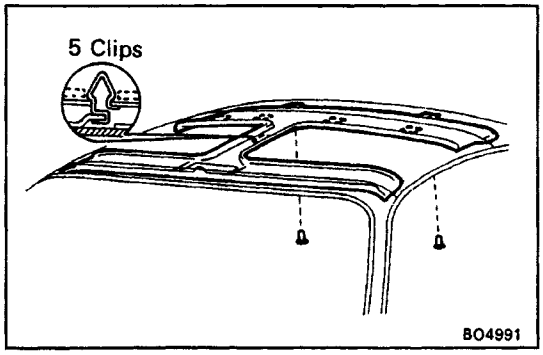

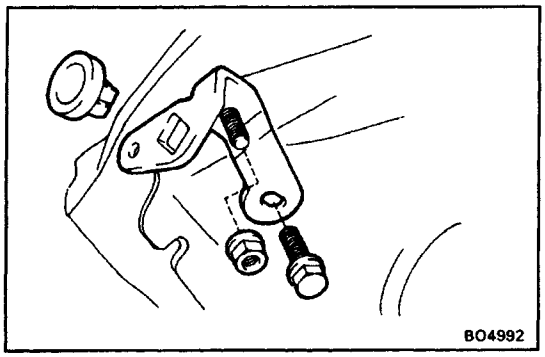

8. REMOVE FRONT FEMALE PLATE

(a) Remove the bolt, the nut and the plate.

(b) Remove the female guide from the plate.

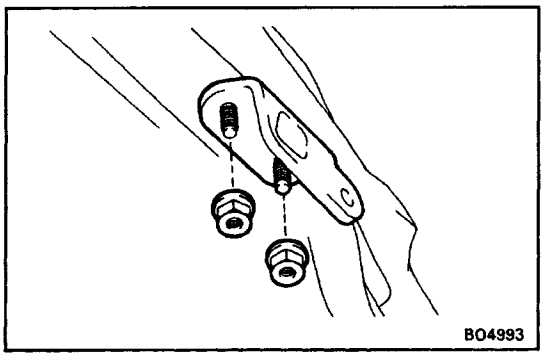

9. REMOVE REAR FEMALE PLATE

Remove two nuts and the plate.

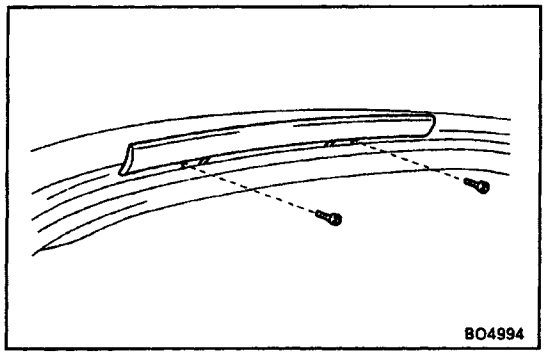

10. REMOVE WIND DEFLECTOR PANEL

Remove two screws and the panel.

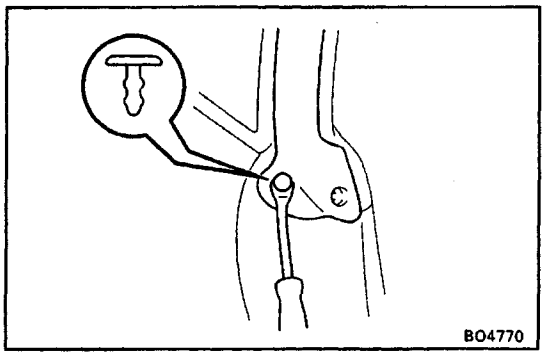

11. REMOVE WEATHERSTRIP

(a) Using the clip remover, remove four clips from the weatherstrip.

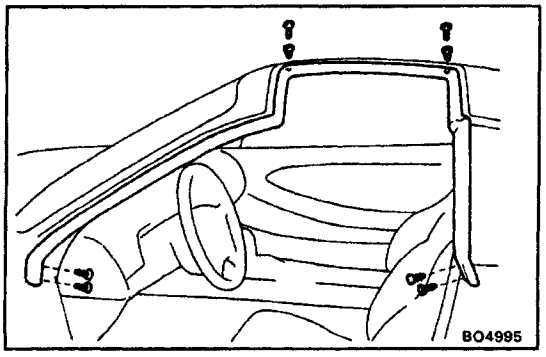

(b) Remove two screws and two grommets from the weatherstrip.

(c) Remove the weatherstrip from the moulding and the retainer.

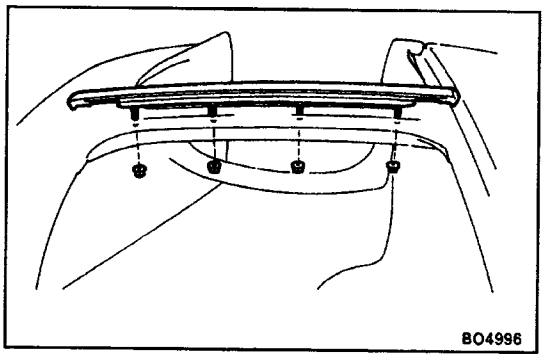

12. REMOVE ROOFTOP MOULDING
Remove four nuts and the top moulding.

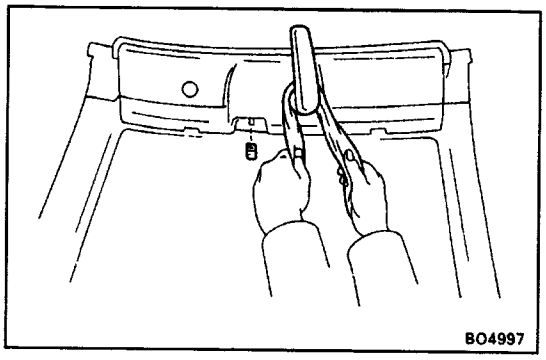

REMOVABLE ROOF DISASSEMBLY BO0CB–01

(See page BO–54)

1. REMOVE LOCK HANDLE AND UNLOCK KNOB
(a) Pull off the snap ring with a shop rag and remove the handle.
(b) Remove the knob.

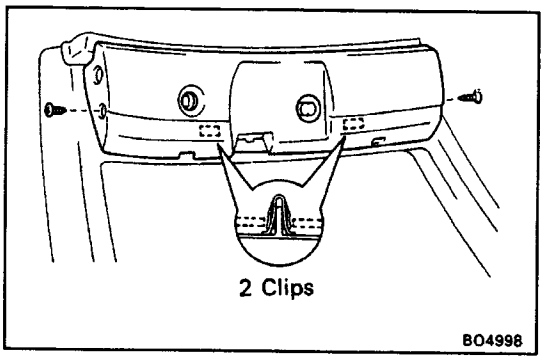

2. REMOVE SIDE RAIL GARNISH
Remove two screws and the garnish.

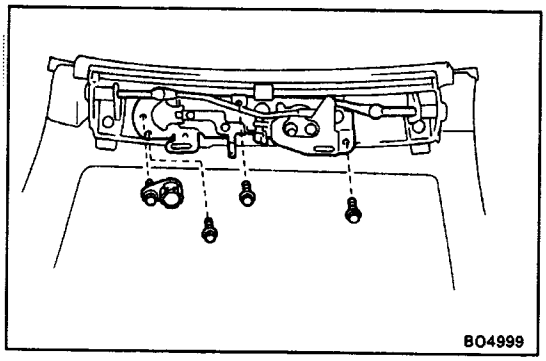

3. REMOVE LOCK CYLINDER
Remove the bolt and the lock cylinder.

4. REMOVE ROOF LOCK
Remove three bolts and the roof lock.

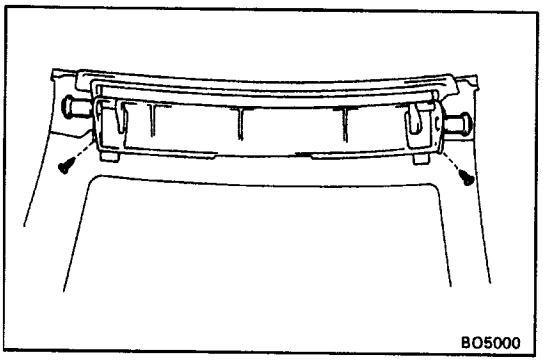

5. REMOVE LOCK GUIDE
(a) Remove the screw.
(b) Pull out the lock guide.

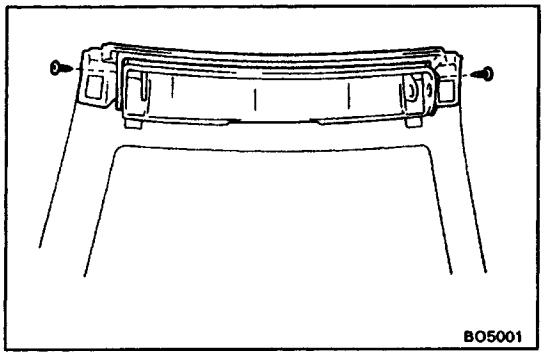

6. REMOVE SIDE RAIL WEATHERSTRIP

Remove two screws and the weatherstrip.

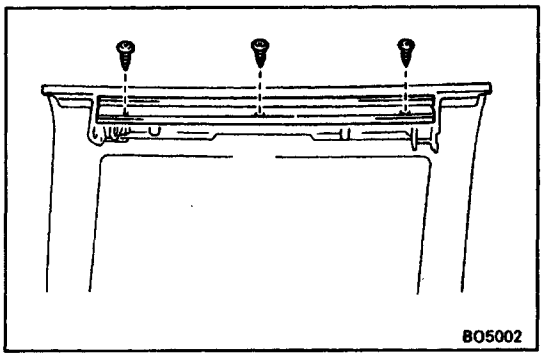

7. REMOVE SIDE RAIL RETAINER

Remove three screws and the retainer.

BO0CC–01

REMOVABLE ROOF ASSEMBLY

(See page BO–54)

1. INSTALL SIDE RAIL RETAINER

Install the retainer with three screws.

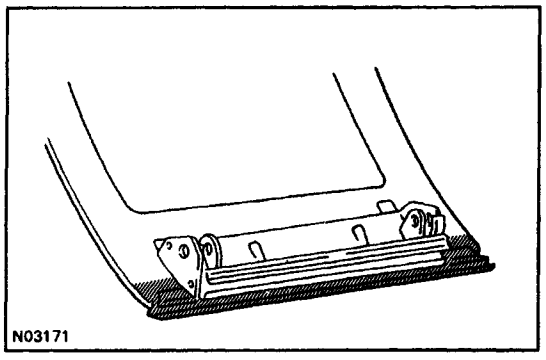

2. CLEAN GLASS SUB–ASSY

Using cleaner, clean the glass sub–assy surface.

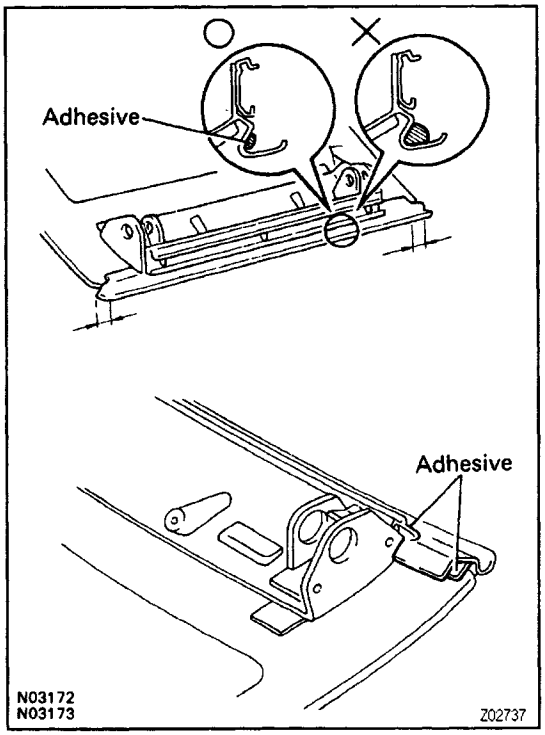

3. APPLY ADHESIVE

Apply adhesive as shown in the illustration.

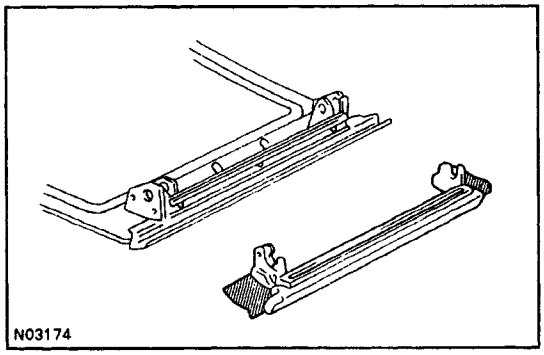

4. INSTALL WEATHERSTRIP

(a) Set the both ends of weather strip on glass sub–assembly.

HINT: Before installing the new moulding, peel off the backing papers on the moulding.

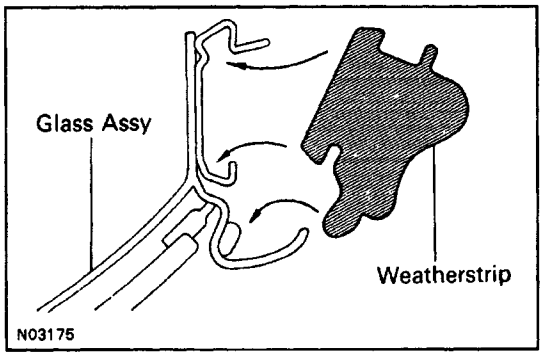

(b) Install the weatherstrip in order shown.

(c) Install two screws.

5. INSPECT FOR LEAKS AND REPAIR

(a) Perform a leak test after hardening time has elapsed.

(b) Seal any leaks with auto glass sealer.

Part No.08833–00030 or equivalent

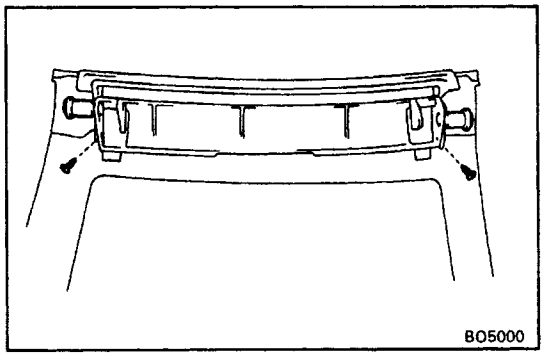

6. INSTALL LOCK GUIDE

(a) Insert the lock guide.

(b) Install the screw.

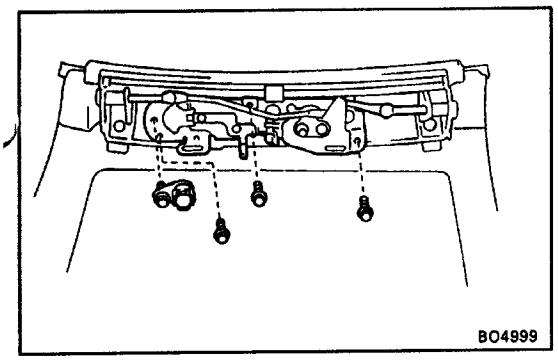

7. INSTALL ROOF LOCK

Install the roof lock with three bolts.

8. INSTALL LOCK CYLINDER

Install the lock cylinder with the bolt.

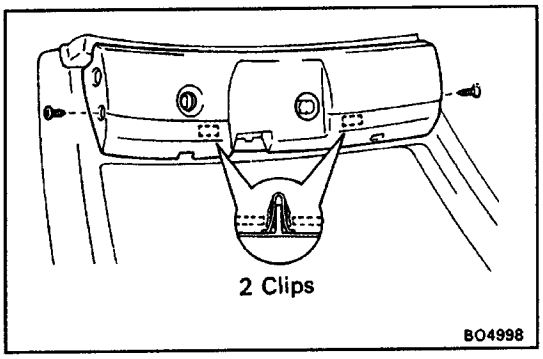

9. INSTALL SIDE RAIL GARNISH

Install the garnish with two screws.

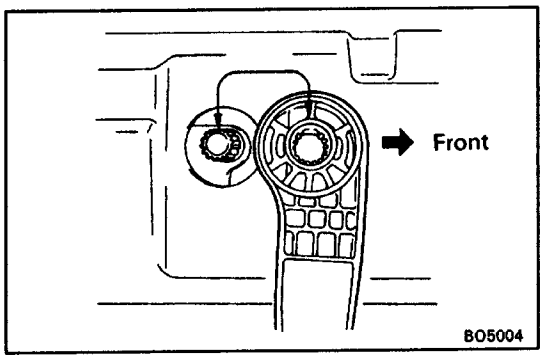

10. INSTALL LOCK HANDLE AND UNLOCK KNOB

(a) Install the snap ring to the lever.
(b) Install the handle to the shaft as shown.
(c) Install the knob.

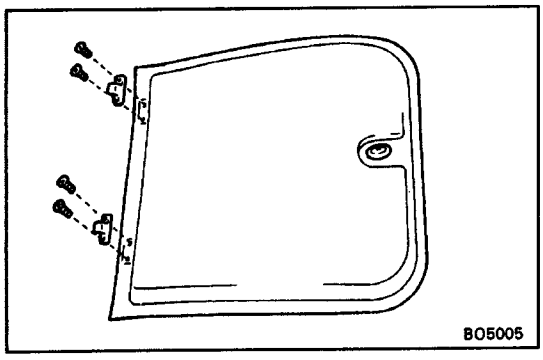

BOOCD–01

SUNSHADE TRIM DISASSEMBLY

(See page BO–54)

REMOVE SUNSHADE TRIM HOLDER

Remove two screws and the holder.

BOOCE–01

SUNSHADE TRIM ASSEMBLY

(See page BO–54)

INSTALL SUNSHADE TRIM HOLDER

Install the holder with two screws.

BOOCF–01

T–BAR ROOF INSTALLATION

(See page BO –54)

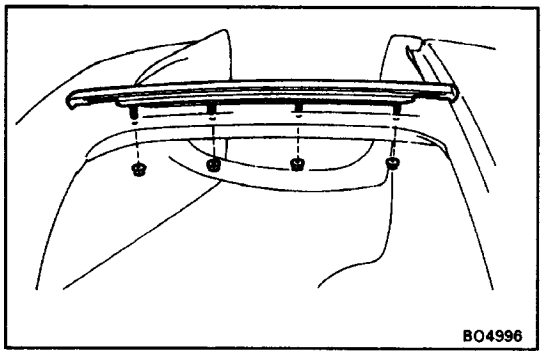

1. INSTALL ROOF TOP MOULDING

Install the top moulding with four nuts.

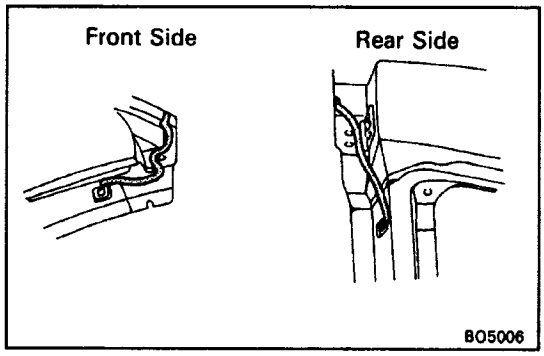

2. INSTALL WEATHERSTRIP

(a) Install the seal to the body.

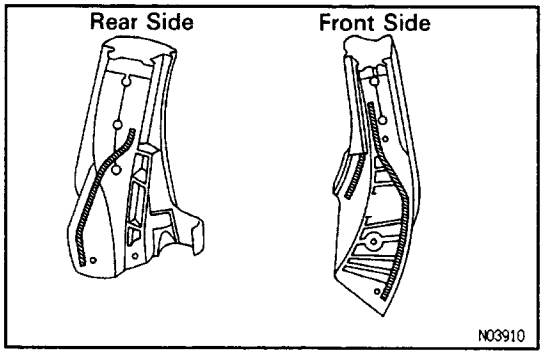

(b) Install the seal to the weatherstrip.

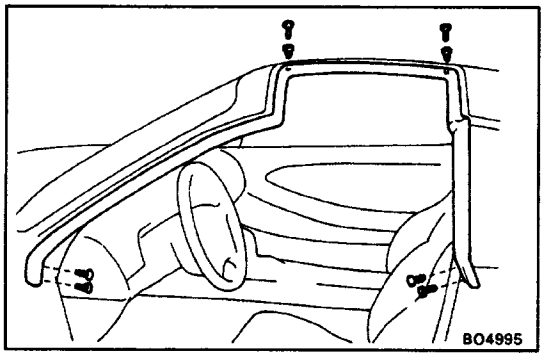

(c) Install the weatherstrip to the moulding and the re–tainer.
(d) Install two screws and two grommets to the weath–erstrip.
(e) Install four clips.

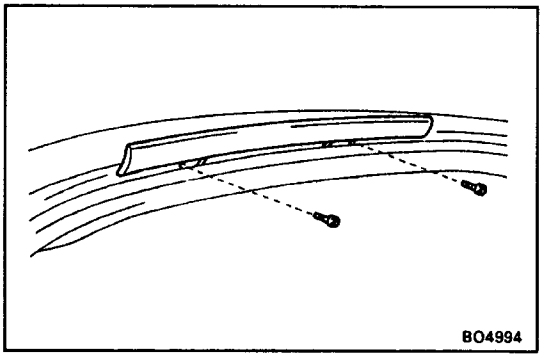

3. INSTALL WIND DEFLECTOR PANEL

Install the panel with two screws.

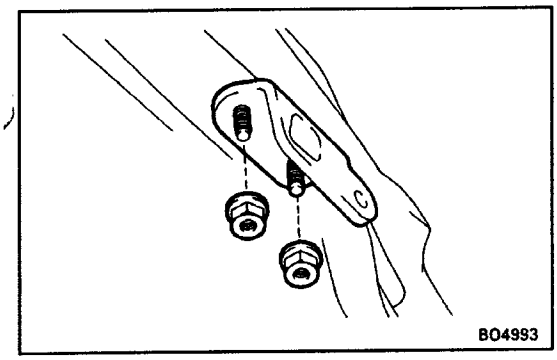

4. INSTALL REAR FEMALE PLATE

Install the plate with two nuts.

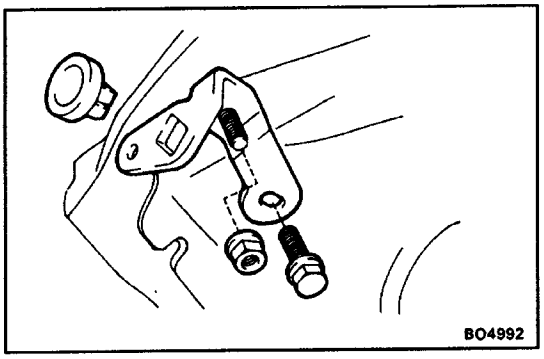

5. INSTALL FRONT FEMALE PLATE

(a) Install the female guide to the plate.
(b) Install the plate with the bolt and the nut.

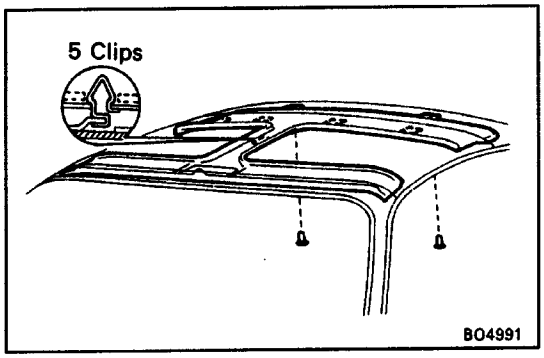

6. INSTALL ROOF HEADLINING

(a) Tap the headlining and fix it in place with the clips.
(b) Install two clips.

7. INSTALL FOLLOWING PARTS:

(a) Roof side inner garnish
(b) Seat belt shoulder anchor
Torque: 43 N–m (440 kgf–cm, 32 ft–lbf)
(c) Quarter trim panel
(d) Room partition trim moulding
(e) Roof headlining rear trim
(f) Sun visors and holders
(g) Inner rear view mirror
(h) Map light and map light cover
(i) Front pillar garnish
(j) Door scuff plate

8. INSTALL FEMALE GUIDE

(a) Install the guide to the rear female plate.
(b) Install the screw.

9. ADJUST REMOVABLE ROOF
(See page BO–55)

10. INSTALL REMOVABLE ROOF AND SUNSHADE TRIM

WINDSHIELD

BOOBY–01

COMPONENTS

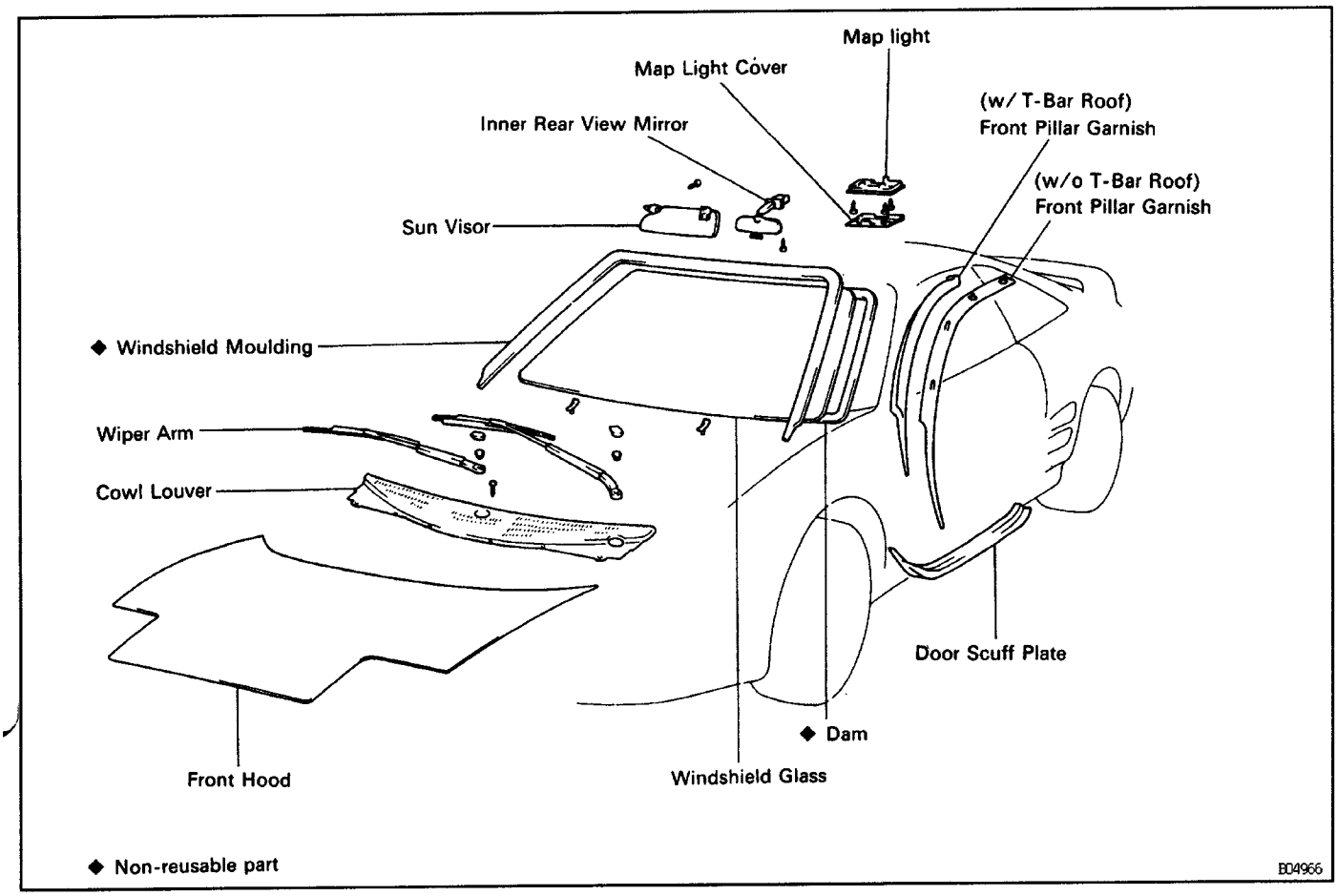

BOOBZ–01

WINDSHIELD REMOVAL

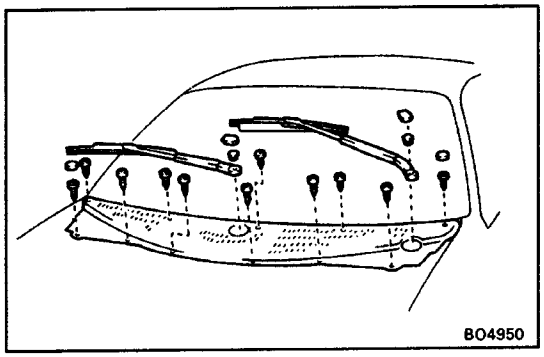

1. REMOVE FRONT HOOD

2. REMOVE WIPER ARMS

(a) Remove two caps.

(b) Remove two nuts and two wiper arms.

3. REMOVE COWL LOUVER

(a) Remove two covers.

(b) Remove eleven screws and the cowl louver.

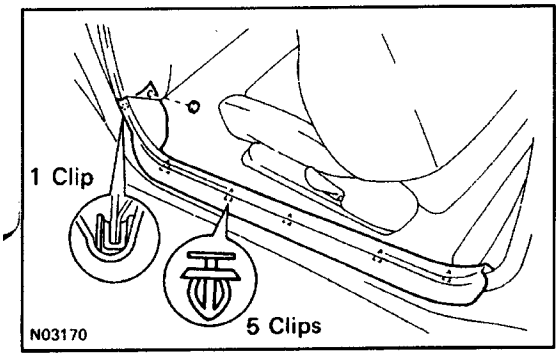

4. REMOVE DOOR SCUFF PLATE

(a) Remove the cap.

(b) Remove the scuff plate by pulling.

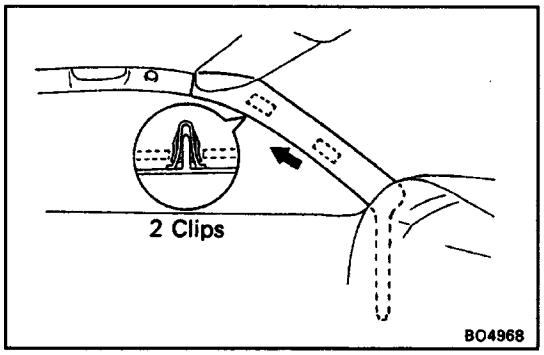

5. REMOVE FRONT PILLAR GARNISH
(w/ T –Bar Roof)
(a) Remove the removable roof.
(b) Remove the clips by your hand.
(c) Pull the garnish rearwards to remove it.

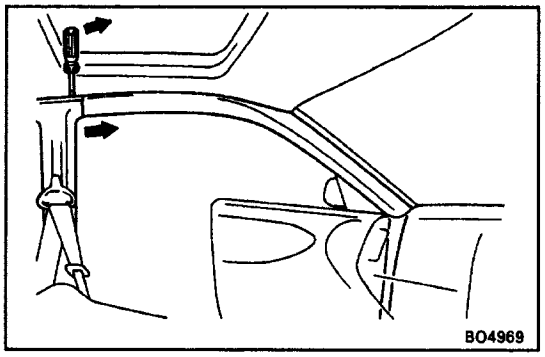

(w/o T–Bar Roof)
(a) Pull out the garnish from the roof side inner garnish.

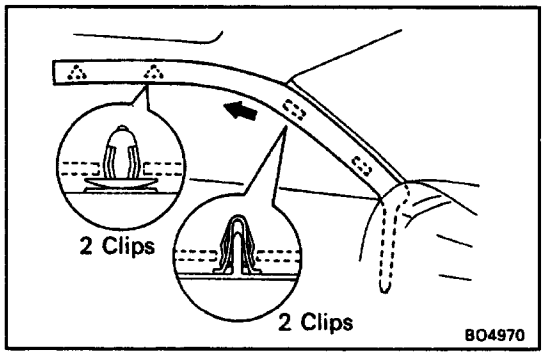

(b) Remove the clips by your hand.
(c) Pull the garnish rearwards to remove it.

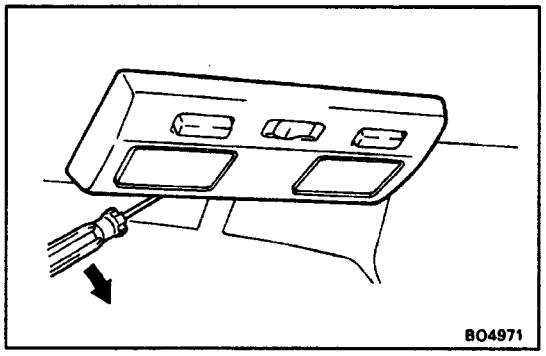

6. REMOVE MAP LIGHT COVER
Using the screwdriver, remove the cover.
HINT: Tape the screwdriver tip before use.
7. REMOVE MAP LIGHT
Remove three screws and the light.
8. REMOVE FOLLOWING PARTS:
- Inner rear view mirror
- Sun visors and holders

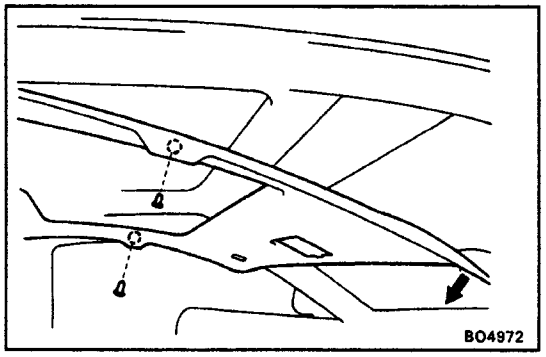

9. PULL DOWN FRONT SIDE OF ROOF HEADLINING
(a) Remove two clips.
(b) Pull down the headlining by hand.
NOTICE: Do not damage the roof headlining.
10. REMOVE WINDSHIELD MOULDING
(See step 3 on page B4–30)

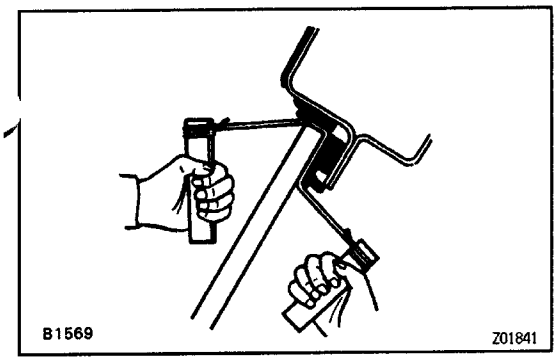

11. REMOVE WINDSHIELD GLASS

(a) Push piano wire through from the interior.

(b) Tie both wire ends to a wooden block or like object.
HINT: Apply adhesive tape to the outer surface to keep the surface from being scratched.

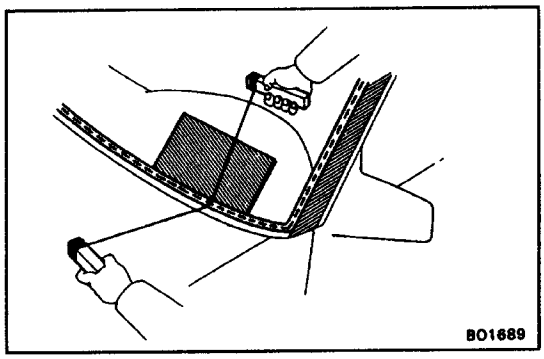

NOTICE: When separating, take care not to damage the paint and interior and exterior ornaments.
To prevent scratching the safety pad when removing the windshield, place a plastic sheet between the piano wire and safety pad.

(c) Cut the adhesive by pulling the piano wire around it.

(d) Remove the glass.
NOTICE: Leave as much of the urethane layer on the body as possible when cutting off the glass.

BOOC0–01

WINDSHIELD INSTALLATION

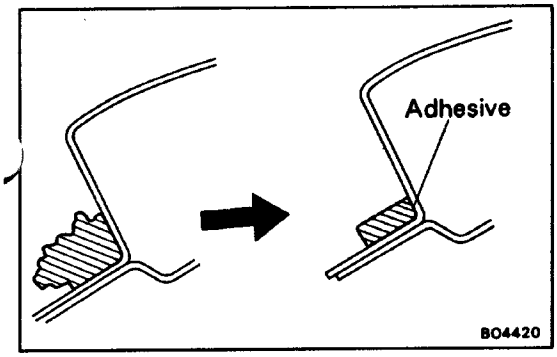

1. CLEAN AND SHAPE CONTACT SURFACE OF BODY

(a) Remove the retainers.

(b) Remove any dam remaining on the body.

(c) Cut away any rough areas with a knife.
HINT Leave as much of the urethane layer on the body as possible.

(d) Clean the cutting surface of the urethane gum with a piece of shop rag saturated in cleaner.
HINT: Even if all the urethane has been removed, clean the body.

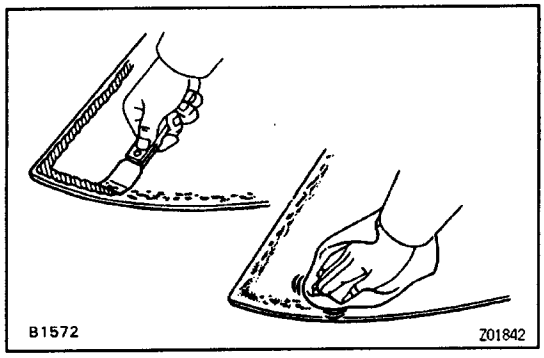

2. CLEAN REMOVED GLASS BEFORE INSTALLATION

(a) Using a scraper, remove the urethane gum sticking to the glass.

(b) Clean the glass with cleaner.
NOTICE: Do not touch the glass after cleaning it.

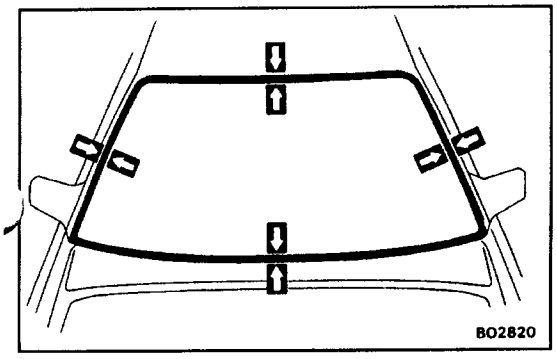

3. POSITION GLASS

(a) Place in correct position.

(b) Check that all contacting parts of the glass rim are perfectly even and do not make contact with the fasteners.

(e) Place reference marks between the glass and body.

(d) Remove the glass.

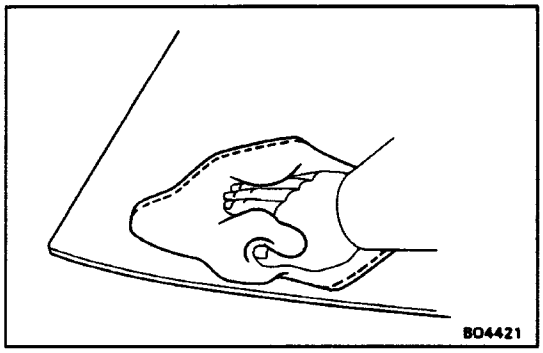

4. CLEAN CONTACT SURFACE GLASS

Using cleaner, clean the contact surface black–colored area around the entire glass rim.

NOTICE: Do not touch the glass face after cleaning it.

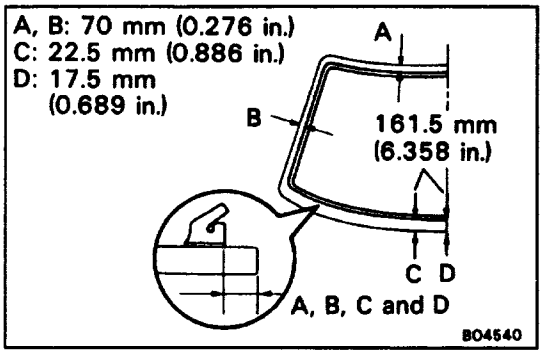

5. INSTALL DAM

Install the dam with double–stick tape as shown in the drawing.

NOTICE: Do not touch the glass face after cleaning it.

6. COAT CONTACT SURFACE OF BODY WITH PRIMER "M"

Using a brush, coat the contact surface on the body with Primer M.

NOTICE:

- **Let the Primer coating dry for 10 minutes or more. Make sure that the installation of the glass is finished within 2 hours.**
- **Use care not to leave any part of the contact surface uncoated or excessively coated, as Primer M and G serve to boost the adhesive power of the urethane to the glass or body.**
- **Do not keep any of the opened Primer M and G for later use.**

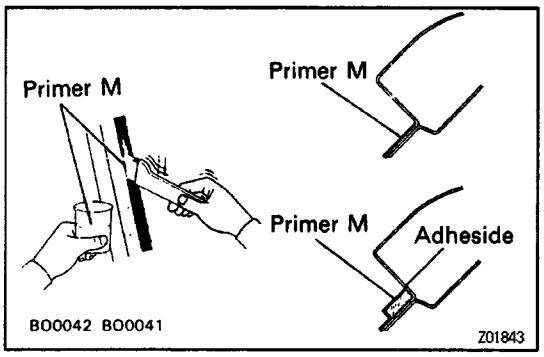

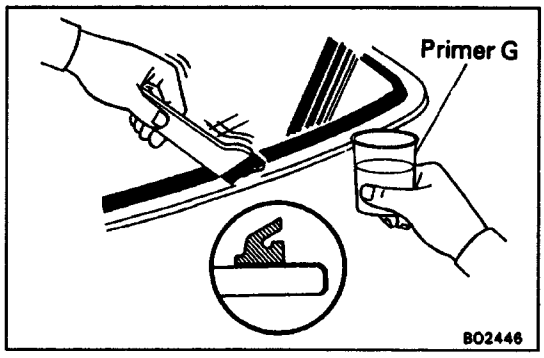

7. COAT CONTACT SURFACE OF GLASS WITH PRIMER "G"

(a) Using a brush or sponge, coat the edge of the glass and the contact surface with Primer G.

(b) Before the Primer dries, wipe or off with a clean cloth.

NOTICE: Be sure that installation of the glass is finished within 70 minutes.

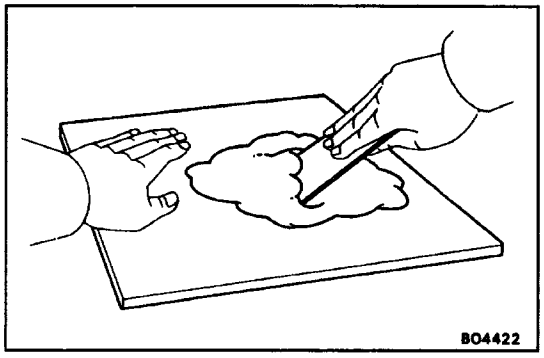

8. MIX ADHESIVE COATING

NOTICE:

- **Be sure that installation of the glass is finished within usable time. (See step 2 on page BO–8)**
- **The mixture should be made in 5 minutes or less.**

(a) Thoroughly clean the glass plate and putty spatula with solvent.

(b) Thoroughly mix 500 g (17.64 oz.) of the main agent and 75 g (2.65 oz.) of the hardening agent on a glass plate or like object with a putty spatula.

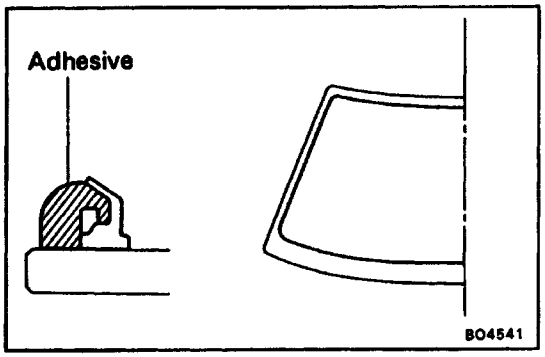

8. APPLY ADHESIVE

(a) Cut off the tip of the cartridge nozzle to make a hole 5 mm (0.20 in.) in diameter. Fill the cartridge with adhesive.

(b) Load the cartridge into the sealer gun.

(c) Coat the glass with adhesive on all contact surfaces along the ridge.

Adhesive height:

If adhesive remains on body
3.5 mm (0.138–0.197 in.)
If no adhesive remains on body
8–10 mm (0.31–0.39 in.)

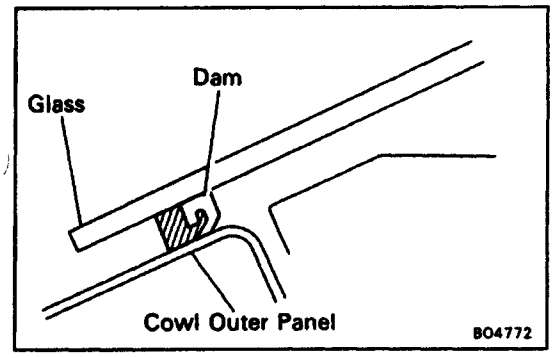

10. INSTALL GLASS

HINT: Confirm that the dam is attached the body panel as shown in the drawing.

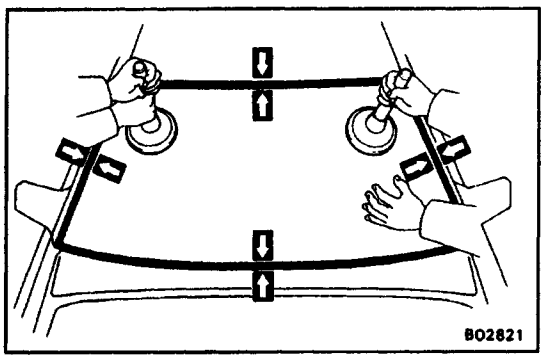

(a) Position the glass so that the reference marks are lined up, and press in gently along the rim.

(b) Using a spatula, apply adhesive on the glass rim.

(c) Use a spatula to remove any excess or protruding adhesive.

(d) Fasten glass securely until the adhesive sets.

11. INSPECT FOR LEAKS AND REPAIR

(a) Perform a leak test after the hardening time has elapsed.

(b) Seal any leaks with auto glass sealer.
Part No.08833–00030 or equivalent

12. INSTALL FOLLOWING PARTS:

- Windshield moulding (See page BO–31)
- Front side of roof headlining
- Inner rear view mirror, sun visors and holders
- Map light and map light cover
- Front pillar garnish and door scuff plate
- Cowl louver and wiper arms

13. INSTALL AND ADJUST FRONT HOOD
(see page BO – 12)
NOTICE: Wait at least twice the setting time before driving the car.

WINDSHIELD MOULDING

B00BQ–01

COMPONENTS

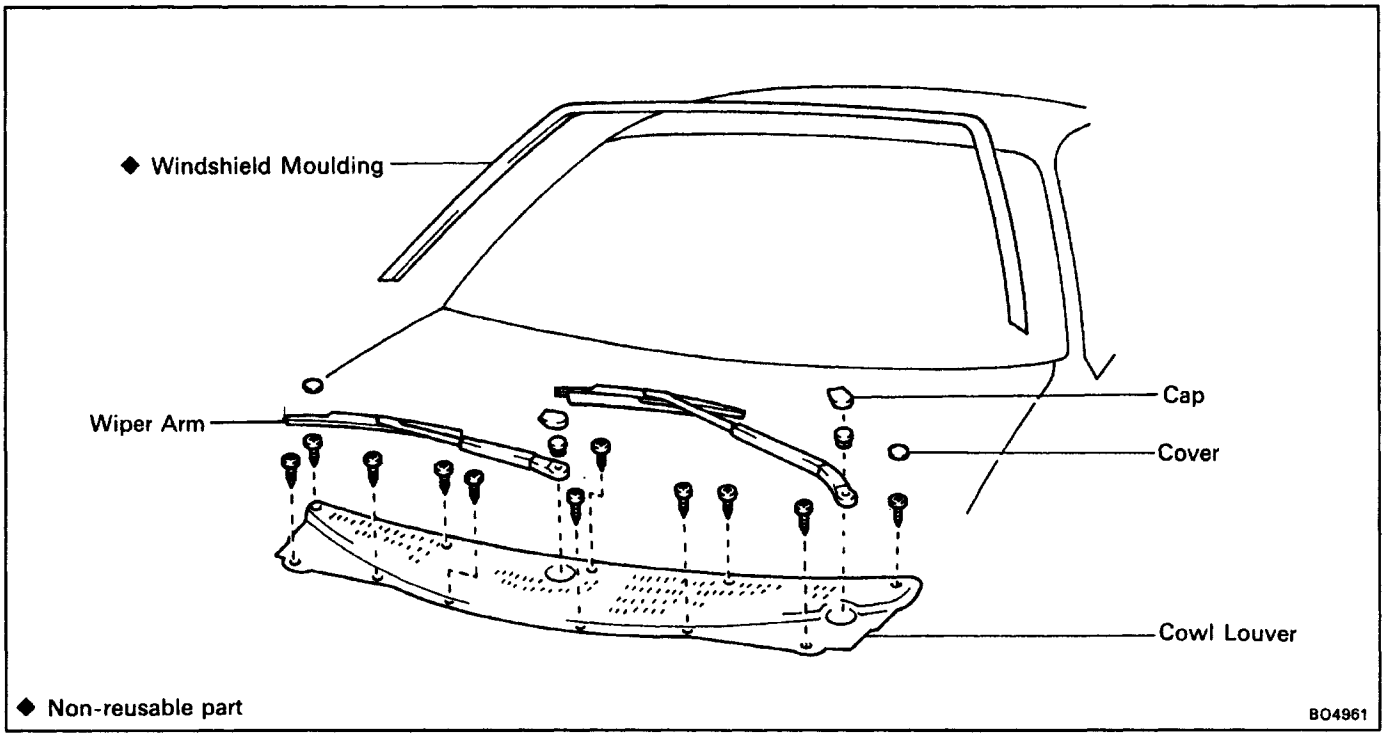

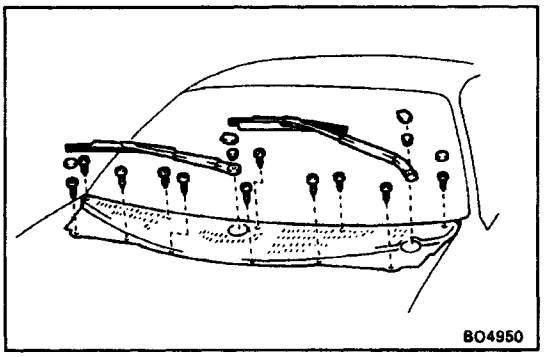

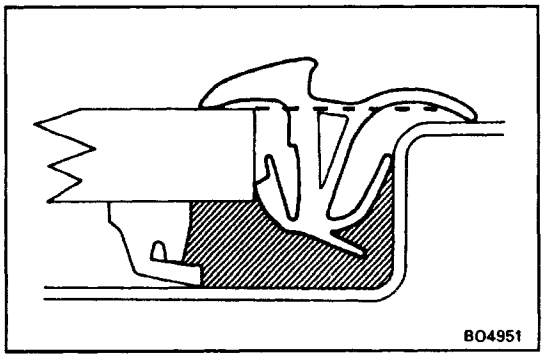

WINDSHIELD MOULDING REMOVAL

B00BH–01

1. REMOVE WIPER ARMS

(a) Remove two caps.

(b) Remove two nuts and two wiper arms.

2. REMOVE COWL LOUVER

(a) Remove two covers.

(b) Remove eleven screws and the cowl louver.

3. REMOVE WINDSHIELD MOULDING

Using a knife, cut off the moulding as shown.

NOTICE: Do not damage the body with the knife.

WINDSHIELD MOULDING INSTALLATION

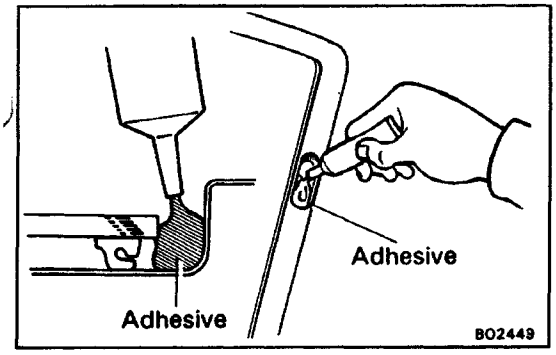

(See page BO–30)

1. CUT ADHESIVE AT MOULDING INSTALLATION AREA

Using the knife, cut off the adhesive around the moulding installation area.

2. APPLY ADHESIVE AT MOULDING INSTALLATION AREA

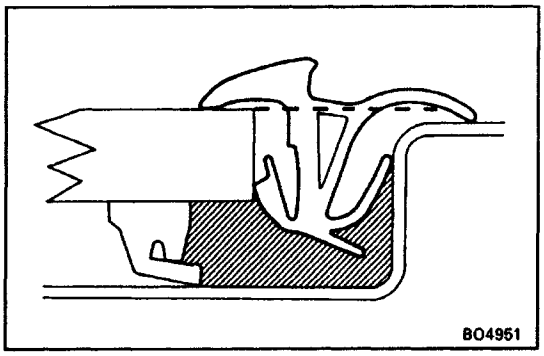

3. INSTALL WINDSHIELD MOULDING

Place the moulding onto the body and tap it by hand.

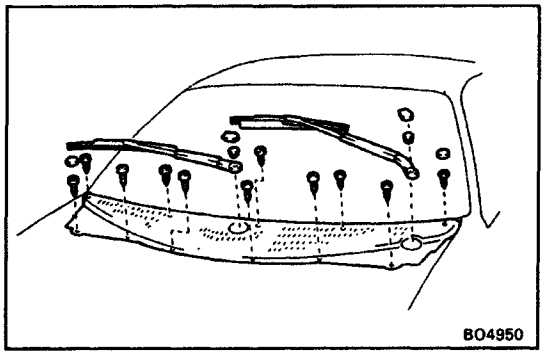

4. INSTALL COWL LOUVER

(a) Install the cowl louver with eleven screws.

(b) Install two covers.

5. INSTALL WIPER ARMS

(a) Install two wiper arms with two nuts.

(b) Install two caps.

AUDIO SYSTEM
PARTS LOCATION

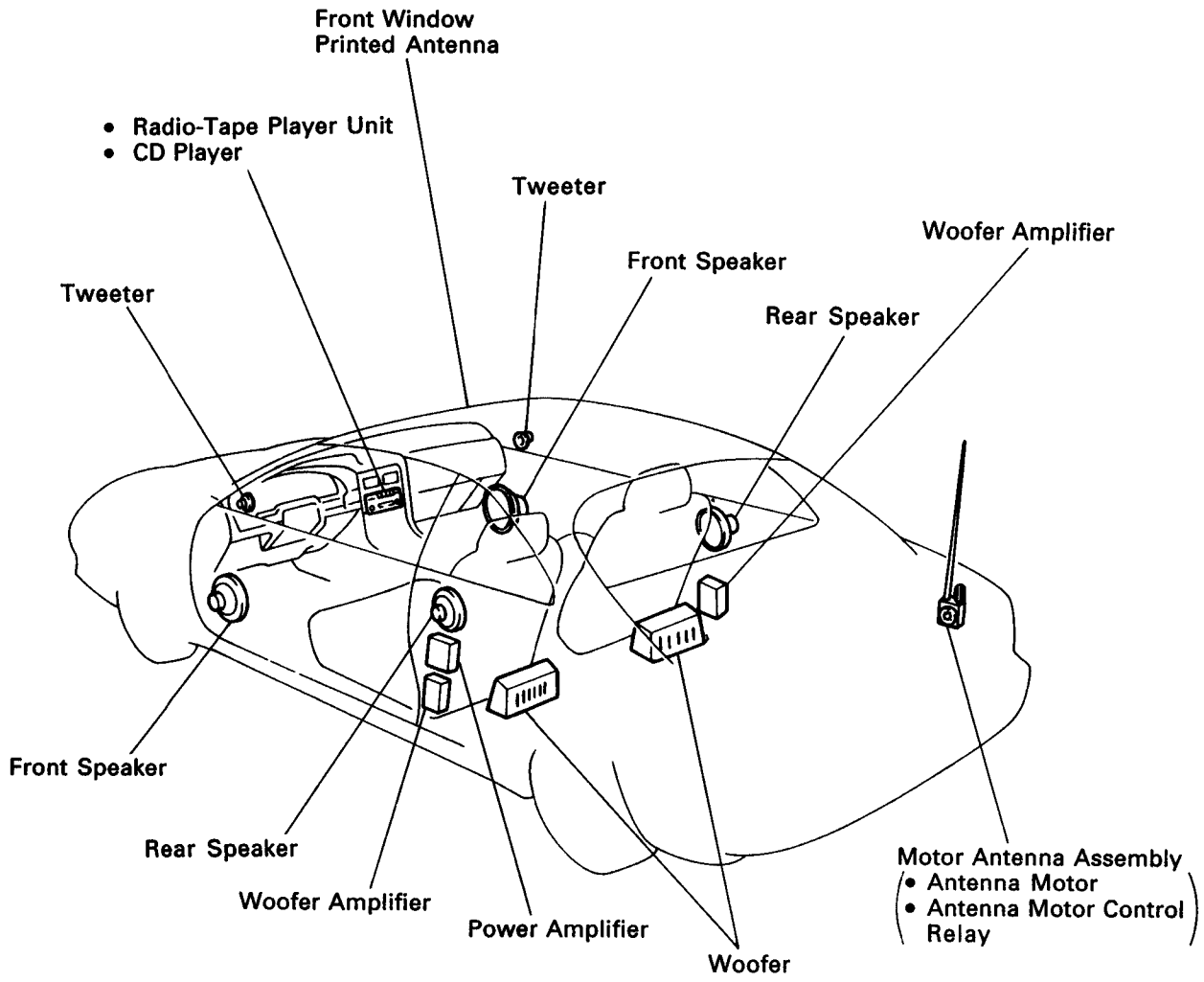

WIRING AND CONNECTOR DIAGRAMS

Radio: Symbol [R]
Radio-Tape Player Unit (built-in Power Amplifier, w/o Woofer): Symbol [U]

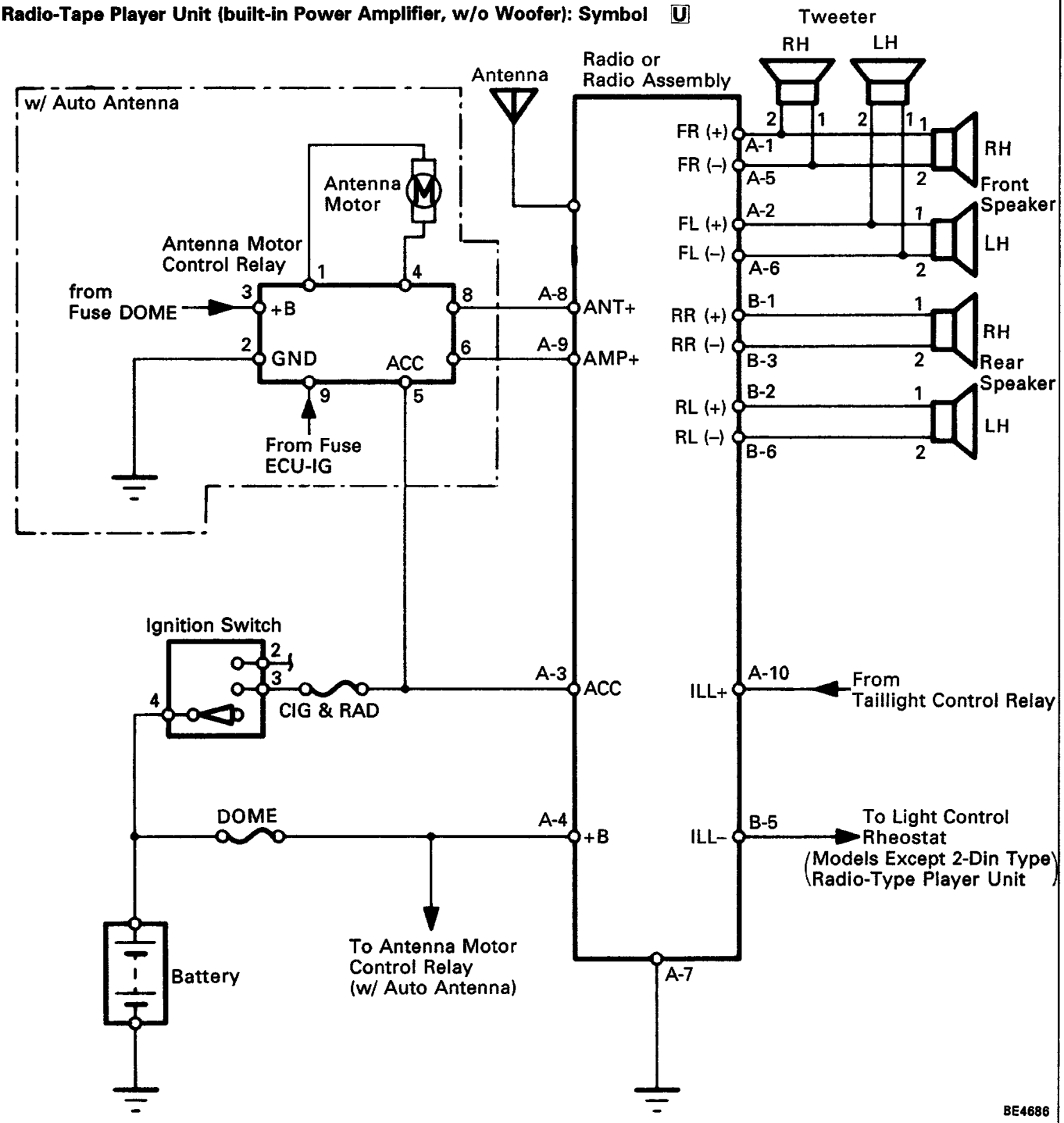

The POWER SOURCE CIRCUIT has been simplified. For full details, see page BE-9.

Radio Assembly
Connector "A" Connector "B"

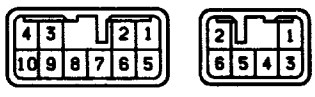

S-10-2-A S-6-2-E

Antenna Motor
Control Relay

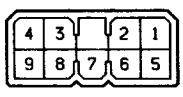

G-9-2

Front Speaker



Ie-2-2-J

Rear Speaker

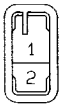

BE4123

Tweeter



GA-2-2-C

Radio-Tape Player Unit (built-in Power Amplifier, w/ Woofer): Symbol U

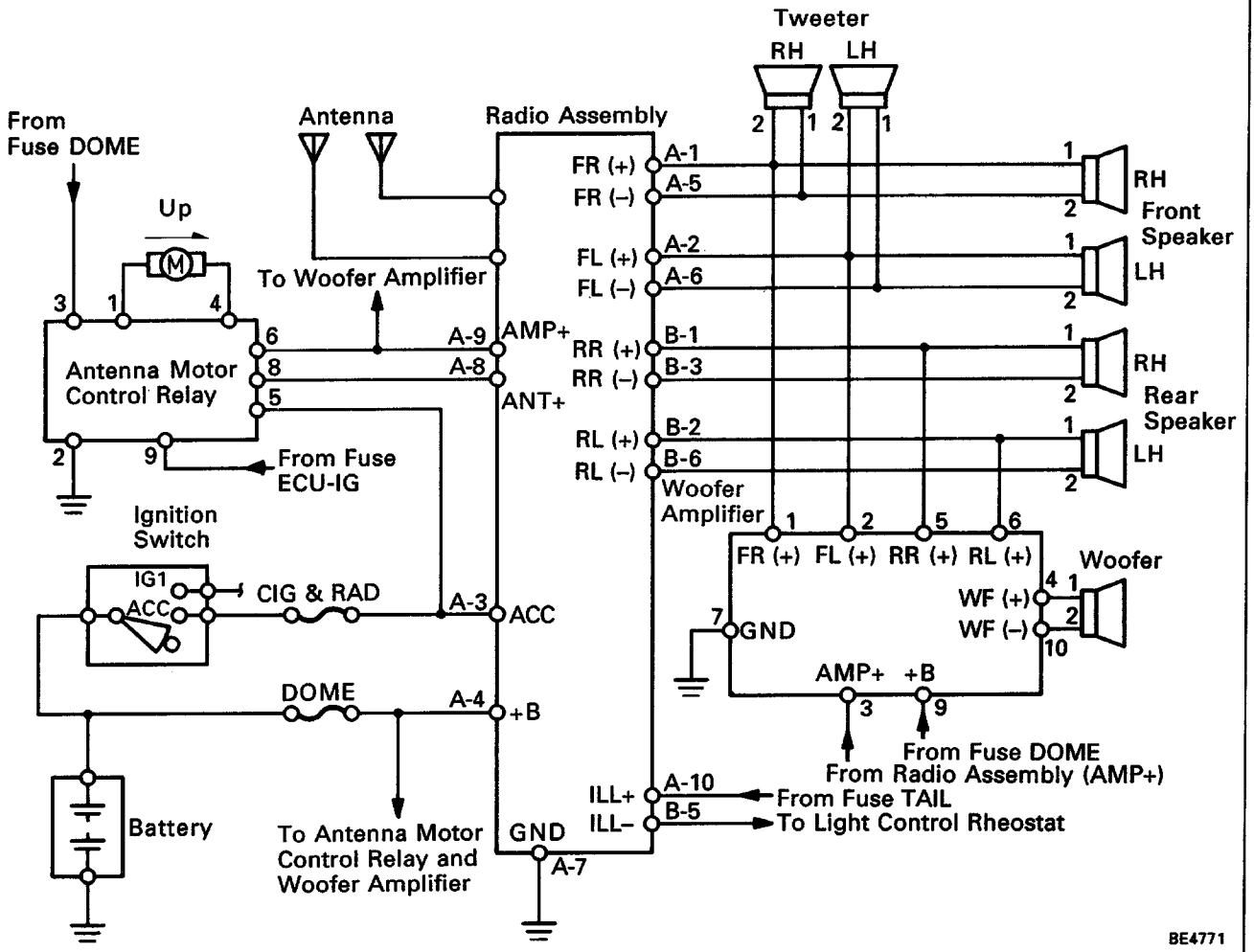

The POWER SOURCE CIRCUIT has been simplified. For full details, see page BE-9.

Radio Assembly
Connector "A" Connector "B"

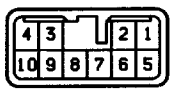
S-10-2-A

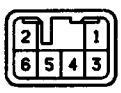
S-6-2-E

Woofer Amplifier

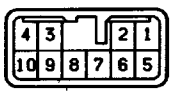
S-10-2-A

Antenna Motor Control Relay

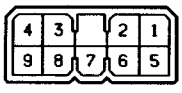
G-9-2

Front Speaker


Ie-2-2-J

Rear Speaker and Woofer

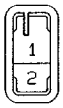
BE4123

Tweeter


GA-2-2-C

Radio-Tape Player Unit (separate Power Amplifier, w/ Woofer): Symbol [P]
Radio-Tape-CD Player Unit: Symbol [C]

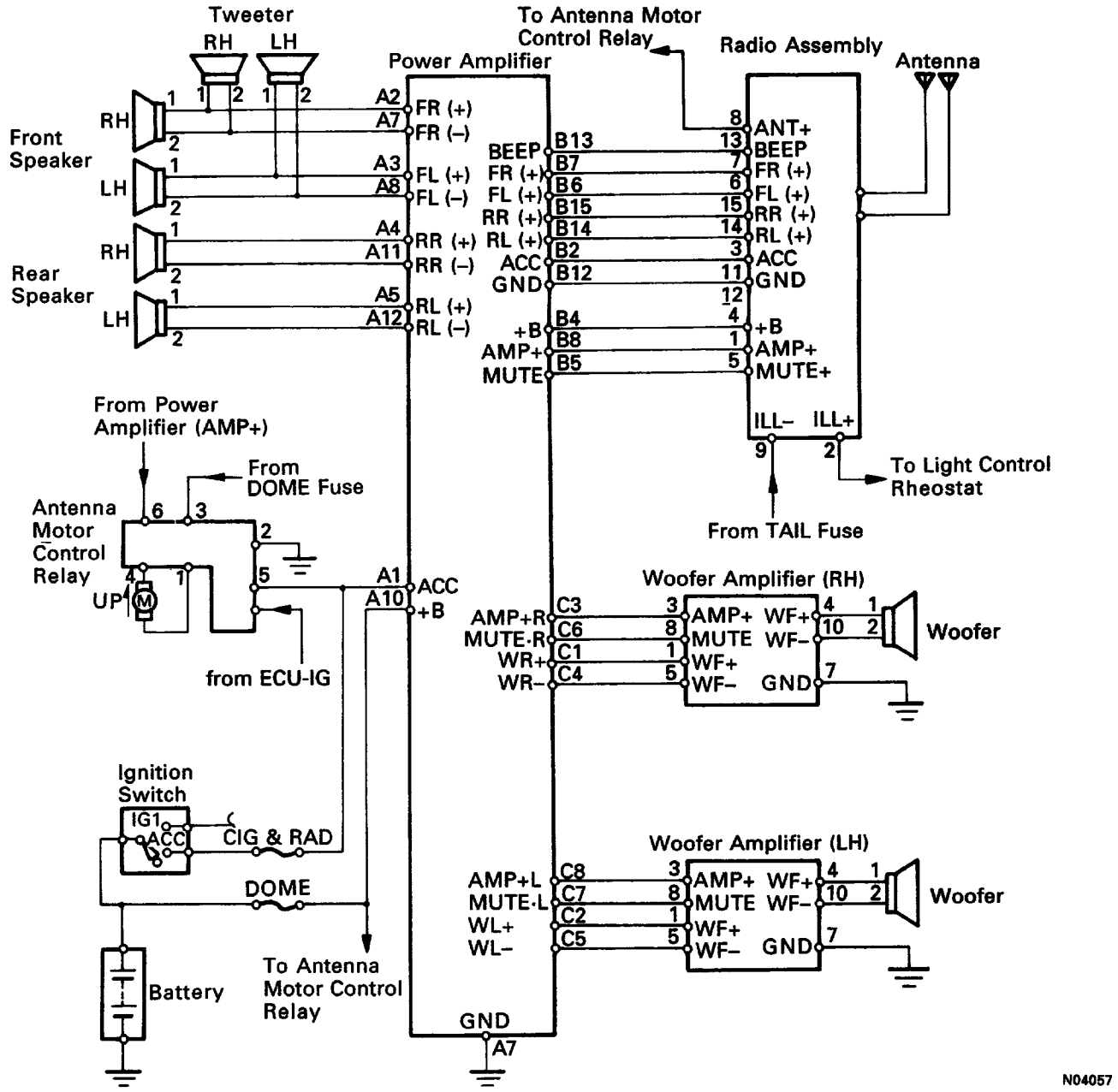

Radio Assembly

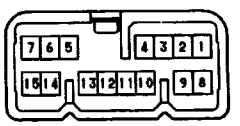

h-15-2-A

Power Amplifier

Connector "C"

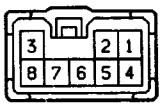

Connector "B"

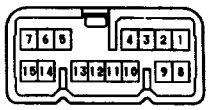

Connector "A"

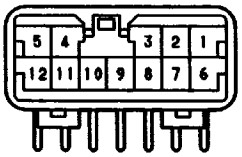

Woofer Amplifier

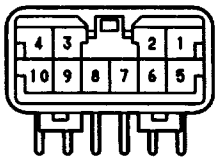

Antenna Motor Control Relay

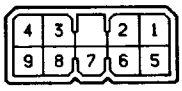

G-9-2

Front Speaker



Ie-2-2-J

Rear Speaker and Woofer

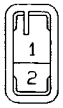

BE4123

Tweeter



GA-2-2-C

The POWER SOURCE CIRCUIT has been simplified. For full details, see page BE-9.

SYSTEM DESCRIPTION

RADIO WAVE BAND

The radio wave bands used in radio broadcasting are as follows:

Frequency	30 kHz	300 kHz	3 MHz	30 MHz	300 M Hz
Designation	LF	MF	HF	VHF	
Radio wave		AM ← →		FM ← →	
Modulation method	Amplitude modulation			Frequency modulation	

LF: Low Frequency MF: Medium Frequency HF: High Frequency VHF: Very High Frequency

SERVICE AREA

There is great difference in the size of the service area for AM, FM monaural, and FM stereo broadcasting. Thus it may happen that FM broadcast cannot be received even though AM comes in very clearly. Not only does FM stereo have the smallest service area, but it also picks up static and other types of interference (”noise”) the most easily.

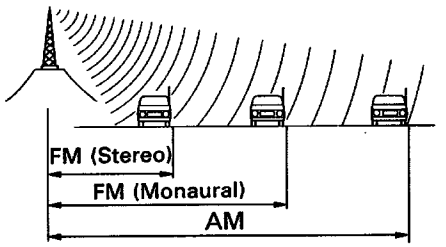

BE2818

RECEPTION PROBLEMS

Besides the problem of static, there are also the problems called ”fading”, ”multipath”, and ”fade out”. These problems care caused not by electrical noise but by the nature of the radio waves themselves.

Fading

Besides electrical interference, AM broadcasts are also susceptible to other types of interference, especially at night. This is because AM radio waves bounce off the ionosphere at night. These radio waves then interfere with the signals from the same transmitter that reach the vehicle’s antenna directly. This type of interference is called ”fading”.

Fading

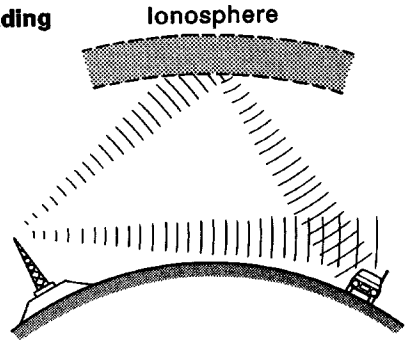

BE2819

Multipath

One type of interference caused by the bouncing of radio waves off of obstructions is called ”multipath”. Multipath occurs when a signal from the broadcast transmitter antenna bounces off of buildings and moun–tains and interferes with the signal that is received d i rectly.

Multipath

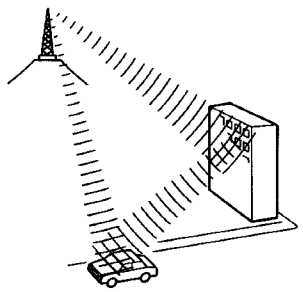

BE2820

Fade Out

Because FM radio waves are of higher frequencies than AM radio waves, they bounce off of buildings, moun–tains, and other obstructions. For this reason, FM sig–nals often seem to gradually disappear or fade away as the vehicle goes behind a building or other obstruction. This is called ”fade out”.

Fade Out

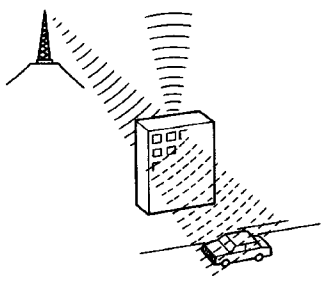

BE2821

COMPACT DISC PLAYER

Compact Disc (hereafter called ”CD”) players use a laser beam pick–up to read the digital signals recorded on the CD and reproduce analog signals of the music, etc. There are 4.7 in. (12 cm) and 3.2 in. (8 cm) CD available.

HINT: Never attempt to disassemble or oil any part of the player unit. Do not insert any object other than a disc into the slot.

NOTICE: CD players use invisible laser beam which could cause hazardous radiation exposure if directed. Be sure to operate the player correctly as instructed.

MAINTENANCE

(Tape Player)

Head Cleaning

(a) Raise the cassette door with your finger.
Next using a pencil or like object, push in the guide.

(b) Using a cleaning pen or cotton applicator soaked in cleaner, clean the head surface, pinch rollers and capstans.

Example:

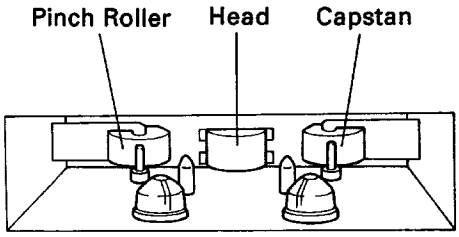

N02844

(CD Player)

Disc Cleaning

If the Disc gets dirty, clean the Disc by wiping the sur–faces from the center to outside in the radial directions with a soft cloth.

NOTICE: Do not use a conventional record cleaner or anti–static record preservative.

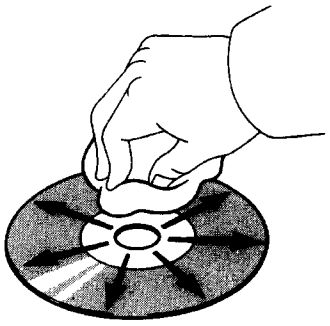

BE4331

HOW TO USE DIAGNOSTIC CHART

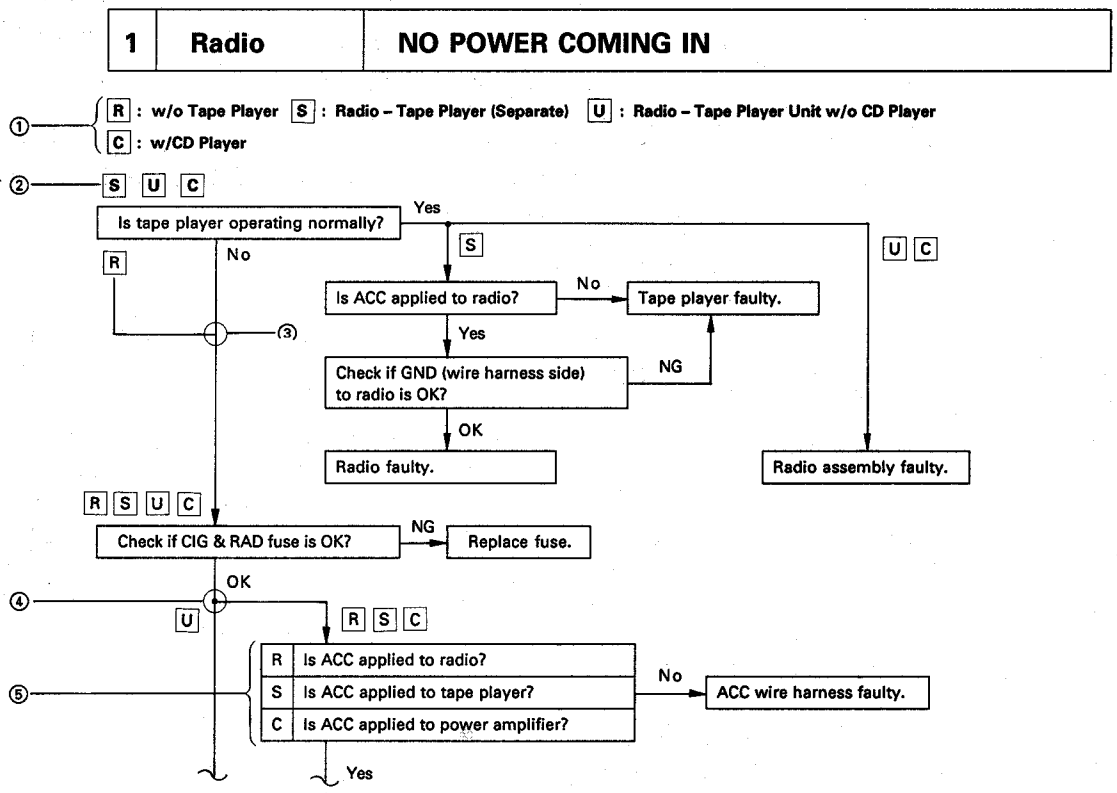

Audio system type and symbol used.
HINT: Confirm the applicable type of audio system. (See page BE–158).

(2) Symbol for type of audio system the question applies to.
HINT: If the audio system type is not applicable, proceed to next question below.

(3) Junction without black circle.
HINT: Proceed to next question below.

(4) Junction with black circle.
HINT: Proceed to question for applicable audio system type.

(5) HINT: Select question for applicable audio system type.

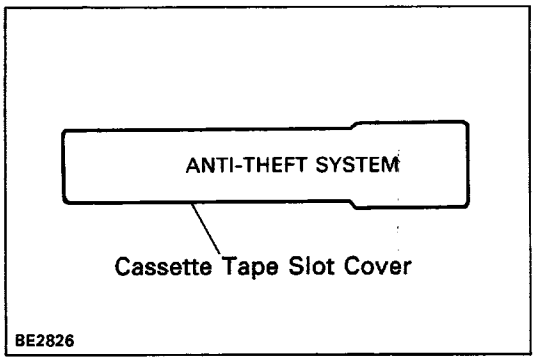

ANTI–THEFT SYSTEM

The anti–theft system is only provided for audio sys–tems equipped with an Acoustic Flavor function.

HINT: The words ”ANTI–THEFT SYSTEM” are dis–played on the cassette tape slot cover.
For operation instructions for the anti–theft system, please consult the audio system section in the Owner’s Manual.

SETTING SYSTEM

The system is in operation once the customer has pushed the required buttons and entered the customer–selected 3–digit ID number.
(Refer to the Owner’s Manual ”SETTING THE ANTI–THEFT SYSTEM”)

HINT:

- When the audio system is shipped the ID number has not been input, so the anti–theft system is not in operation.
- If the ID number has not been input, the audio system remains the same as a normal audio system.

2. ANTI–THEFT SYSTEM OPERATION

If the normal electrical power source (connector or battery terminal) is cut off, the audio system becomes inoperable, even if the power supply resumes.

3. CANCELLING SYSTEM

The ID number chosen by the customer is input to cancel the anti–theft system.
(Refer to the Owner’s Manual ”IF THE SYSTEM IS ACTIVATED”)

HINT: To change or cancel the ID number, please. refer to the owner’s Manual ”CANCELLING THE SYSTEM”.

TROUBLESHOOTING

NOTICE: when replacing the internal mechanism (ECU part) of the audio system, be careful that no part of your body or clothing comes in contact with the terminals of the leads from the IC, etc. of the replacement part (spare part).

HINT: This inspection procedure is a simple troubleshooting which should be carried out on the vehicle during system operation and was prepared on the assumption of system component troubles (except for the wires and connectors, etc.)

Always inspect the trouble taking the following items into consideration.

- Open or short circuit of the wire harness
- Connector or terminal connection fault
- For audio systems with anti–theft system, troubleshooting items marked (*)indicate that ”Troubleshooting for ANTI–THEFT SYSTEM” should be carried out first.

Problem		No.
Radio	No power coming in.	*1
	Power coming in, but radio not operating.	*2
	Noise present, but AM – FM not operating.	3
	Either speaker does not work.	4
	Either AM or FM does not work.	5
	Reception poor (Volume faint).	5
	Few preset tuning bands.	5
	Sound quality poor.	6
	Cannot set station select button.	7
	Preset memory disappears.	7
Tape Player	Cassette tape cannot be inserted.	8
	Cassette tape inserts, but no power.	*9
	Power coming in, but tape player not operating.	10
	Either speaker does not work.	11
	Sound quality poor (Volume faint).	12
	Tape jammed, malfunction with tape speed or auto–reverse.	13
	APS, SKIP, RPT buttons not operating.	14
	Cassette tape will not eject.	*15
CD Player	CD cannot be inserted.	16
	CD inserts, but no power.	17
	Power coming in, but CD player not operating.	18
	Sound jumps.	19
	Sound quality poor (Volume faint).	20
	Either speaker does not work.	21
	CD will not eject.	22
Antenna	Antenna – related.	23
Noise	Noise produced by vibration or shock while driving.	24
	Noise produced when engine starts.	25

TROUBLESHOOTING FOR ANTI–THEFT SYSTEM

Turn Ignition key from LOCK position to ACC position.

Display A:
ID Number is set.

[SEC] display disappears after 1 second.

No

Yes

Radio switch ON.

OK

Normal operation.

NG

Cancel ID number, refer to each malfunction item.

Display E:
ANTI–THEFT SYSTEM operation condition.
(ID number input error 10 times or more.

Take to designated radio service station.

Display B

Radio switch ON.

Display B

Refer to each malfunction item

Display D

Normal operation.

ANTI–THEFT SYSTEM operation condition.
(ID number input error 9 times or less.)
Input ID number to cancel ANTI–THEFT SYSTEM, and check display.

Display A → B

Radio switch ON.

Display D

ANTI–THEFT SYSTEM cancelled.
Check audio system again.

OK

Normal operation.

NG

Cancel ID number, refer to each malfunction item.

Display B

Refer to each malfunction item

Display E

Take to designated radio service station.

Display C → A

ANTI–THEFT SYSTEM not cancelled.
(ID number input error 9 times or less.)

(Liquid Crystal Display (LCD) for Audio System)

Display A

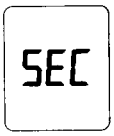

2 DIN Type

BE2810

Display B

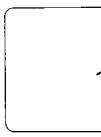

2 DIN Type

BE2811

Display C

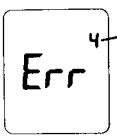

2 DIN Type

BE2812

Display D Example:

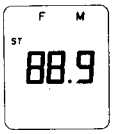

Radio Display

2 DIN Type

BE2813

Display E

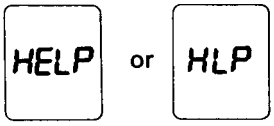

2 DIN Type

BE5520 BE5519

HINT:

- Refer to Owner's Manual for operation details of ANTI–THEFT SYSTEM.
- When the ID number has been cancelled, reset the same number after completing the operation, or inform the customer that it has been cancelled.

1 Radio NO POWER COMING IN

[R] : Radio [U] : Radio – Tape Player Unit (Built–in Power Amplifier)
[P] : Radio – Tape Player Unit (Separate Power Amplifier)

[U] [P]

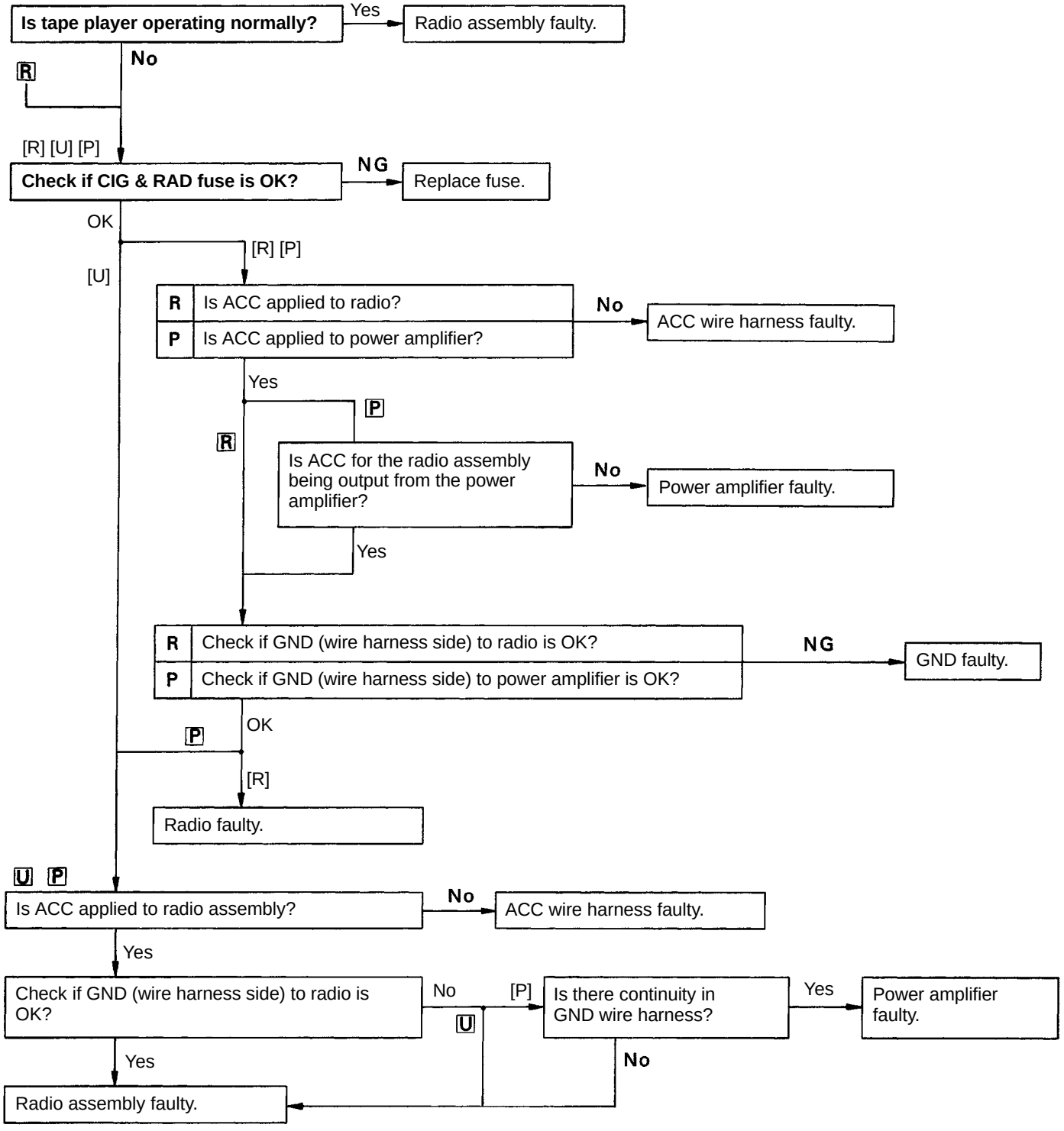

2	Radio	POWER COMING IN, BUT RADIO NOT OPERATING

R : Radio [U] : Radio – Tape Player Unit (Built–in Power Amplifier)
P : Radio – Tape Player Unit (Separate Power Amplifier)
A : Antenna w/o Motor [M] : Motor Antenna [D]: Motor Antenna and Glass Printed Antenna

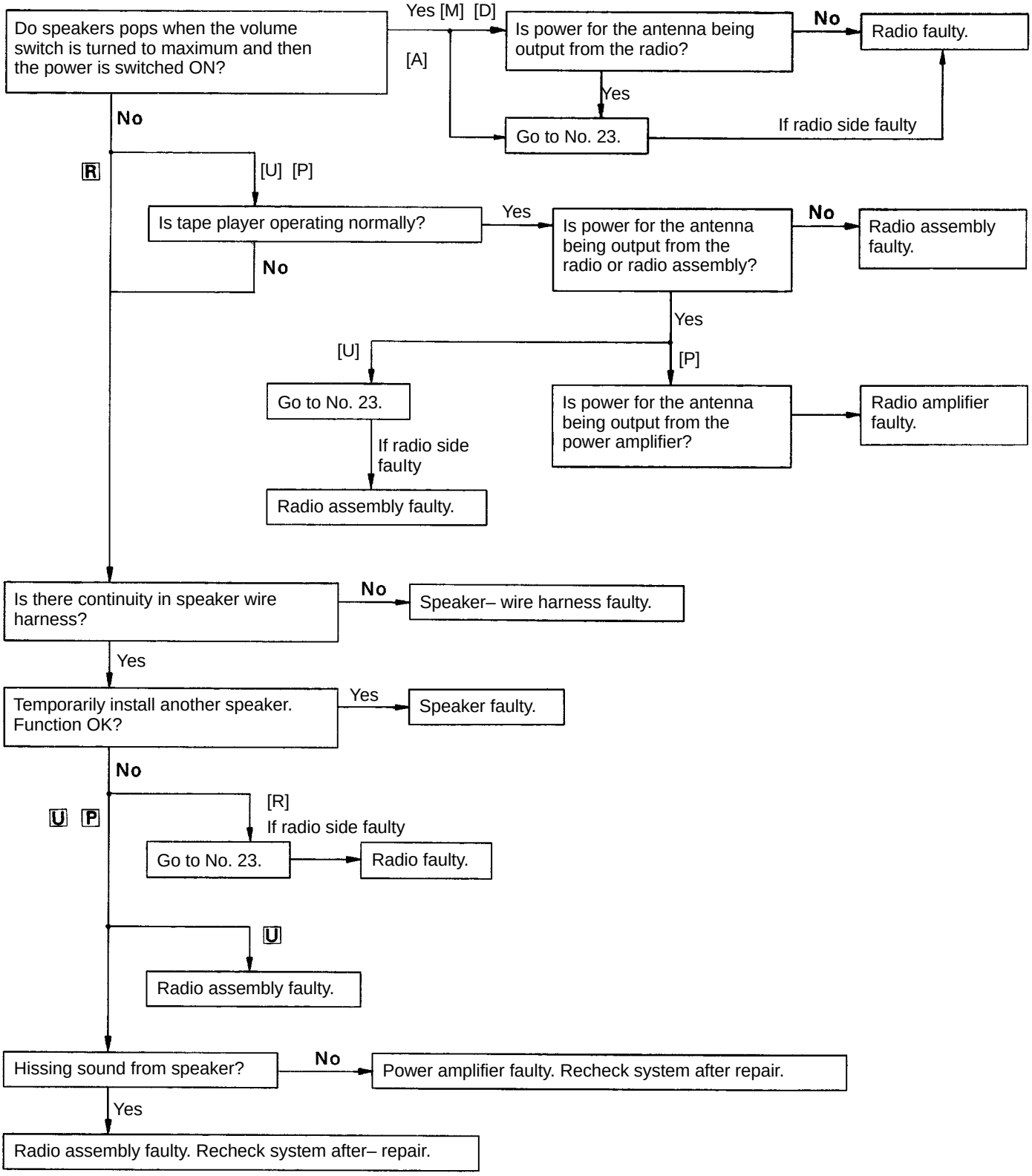

3 Radio NOISE PRESENT, BUT AM–FM NOT OPERATING

[R]: Radio [U] : Radio – Tape Player Unit (Built–in Power Amplifier)
[P] : Radio – Tape Player Unit (Separate Power Amplifier)

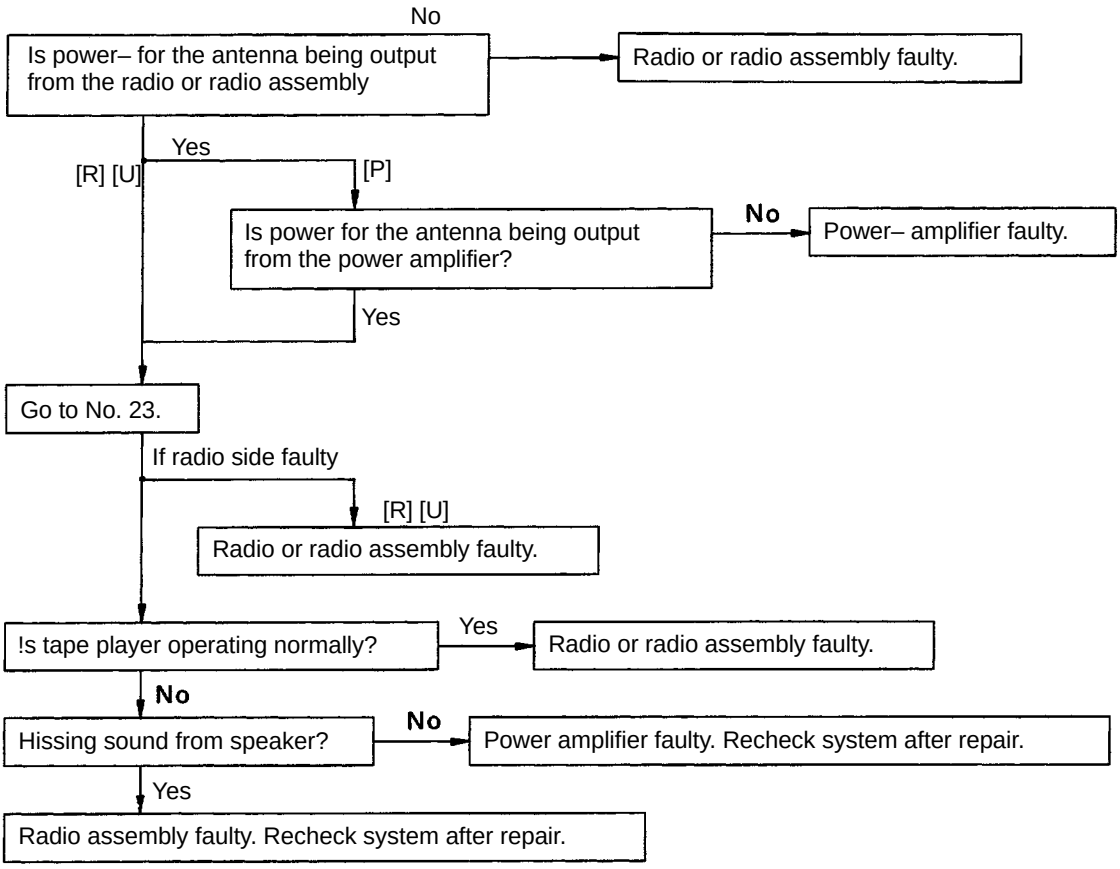

4 Radio EITHER SPEAKER DOES NOT WORK

[R] : Radio [U] : Radio – Tape Player Unit (Built–in Power Amplifier)
[P] : Radio – Tape Player Unit (Separate Power Amplifier)

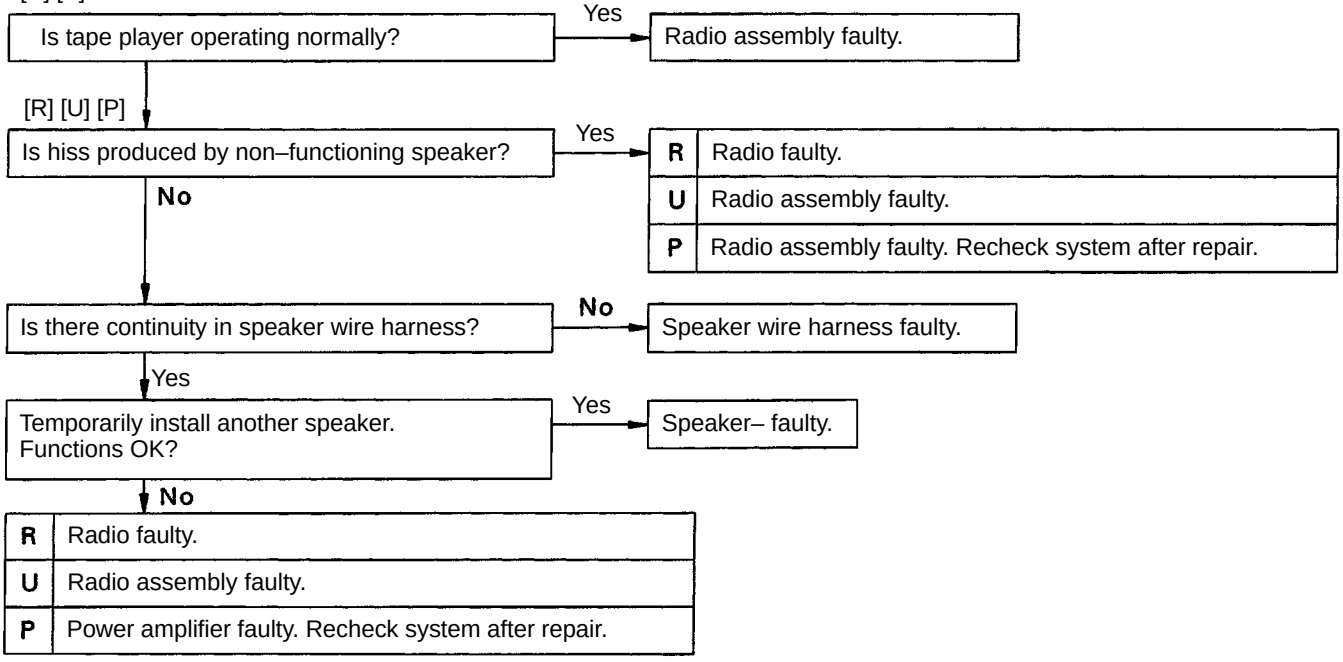

5	Radio	EITHER AM OR FM DOES NOT WORK, RECEPTION POOR (VOLUME FAINT), FEW PRESET TUNING BANDS

[R]: Radio [U] : Radio – Tape Player Unit (Built–in Power Amplifier)
[P]: Radio – Tape Player Unit (Separate Power Amplifier)

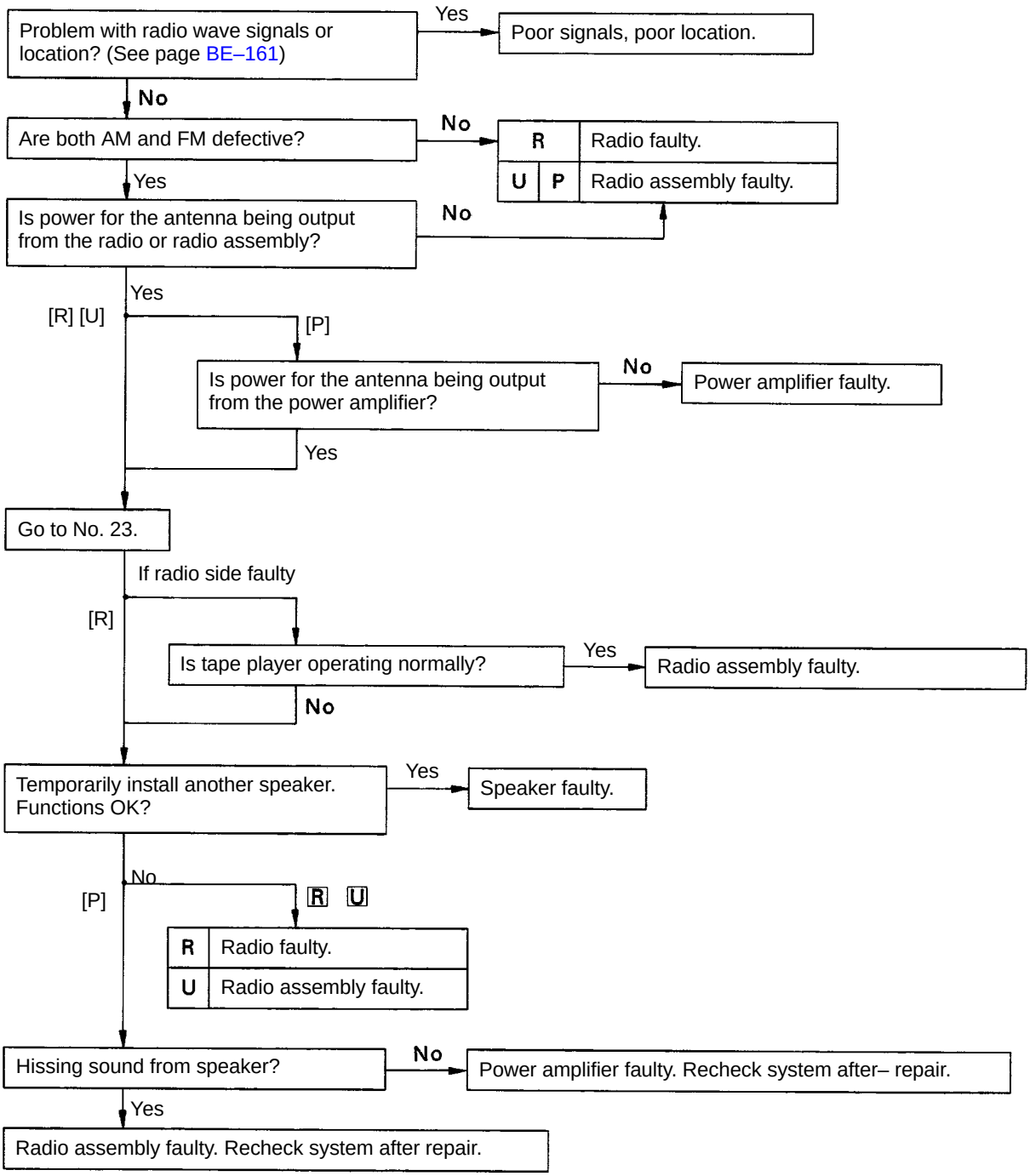

6 Radio SOUND QUALITY POOR

[R]: Radio [U] : Radio – Tape Player Unit (Built–in Power Amplifier)
[P]: Radio – Tape Player Unit (Separate Power Amplifier)

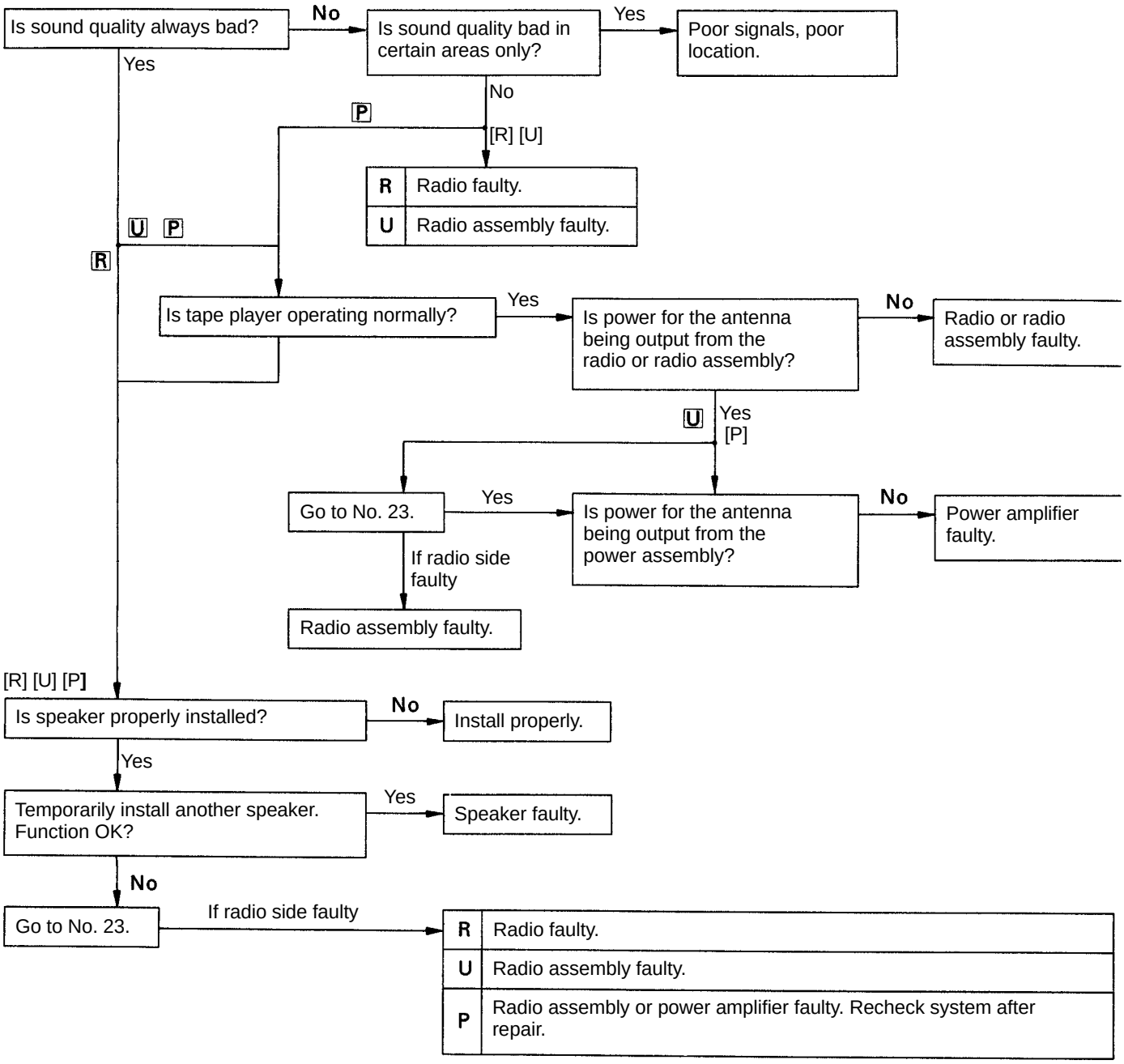

7	Radio	CANNOT SET STATION SELECT BUTTON, PRESET MEMORY DISAPPEARS

[R] : Radio [U] : Radio – Tape Player Unit (Built–in Power Amplifier)
[P] : Radio – Tape Player Unit (Separate Power Amplifier)
[U] [P]

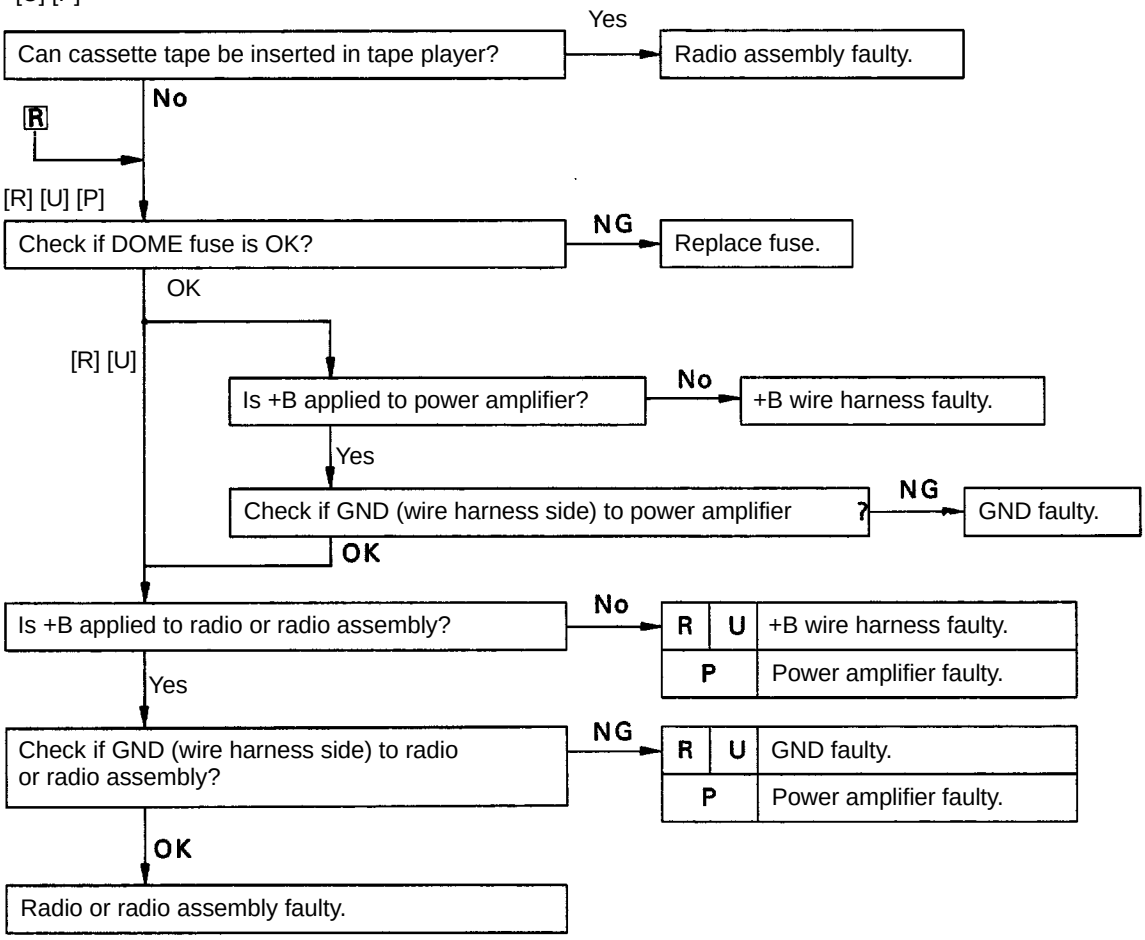

8 Tape Player CASSETTE TAPE CANNOT BE INSERTED

[U] : Radio – Tape Player Unit (Built–in Power Amplifier)
[P] : Radio – Tape Player Unit (Separate Power Amplifier)
[U] [P]

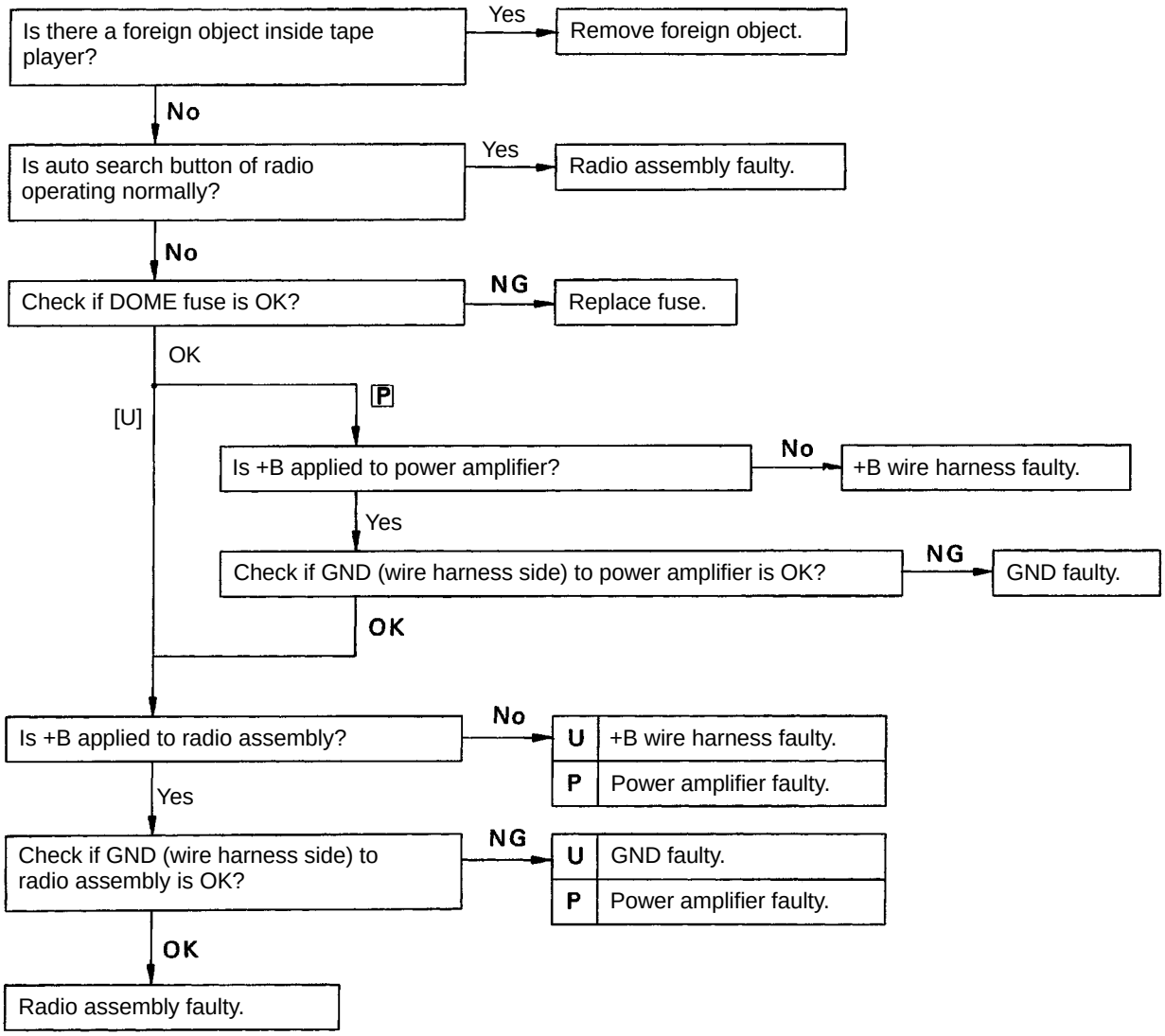

9 Tape Player CASSETTE TAPE INSERTS, BUT NO POWER

[U] : Radio – Tape Player Unit (Built–in Power Amplifier)
[P] : Radio – Tape Player, Unit (Separate Power Amplifier)

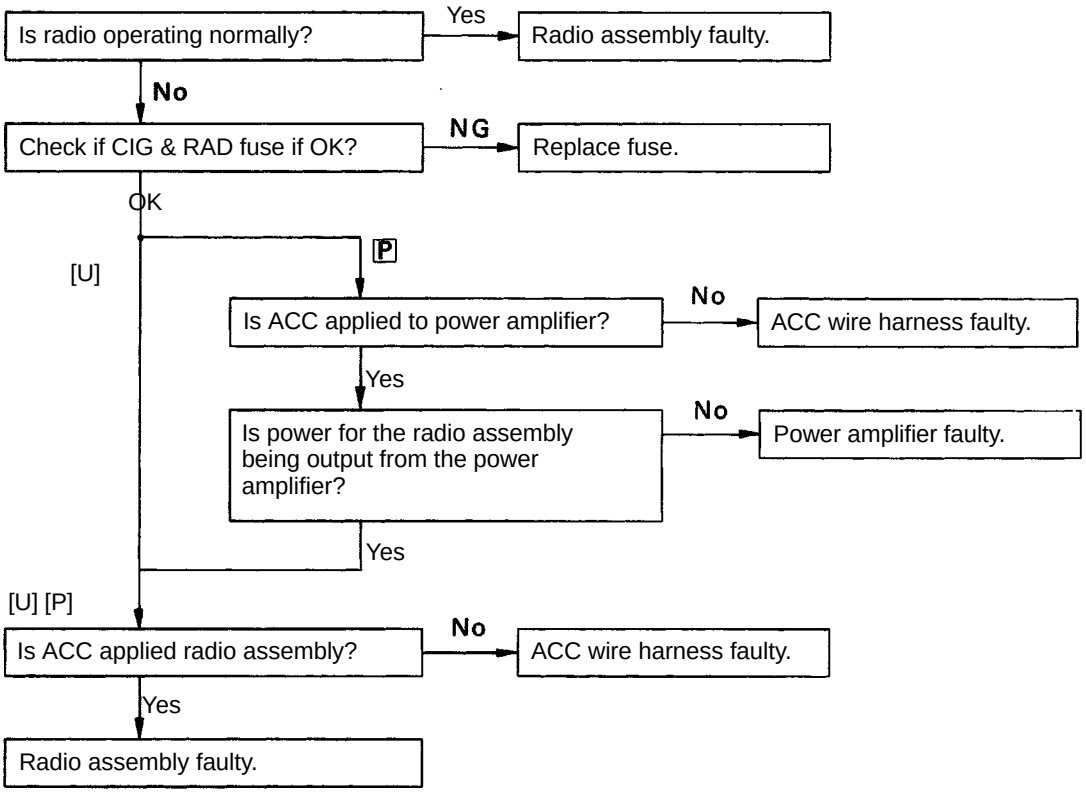

10 Tape Player — POWER COMING IN, BUT TAPE PLAYER NOT OPERATING

[U] Radio – Tape Player Unit (Built–in Power Amplifier
[P]: Radio – Tape Player Unit (Separate Power Amplifier)

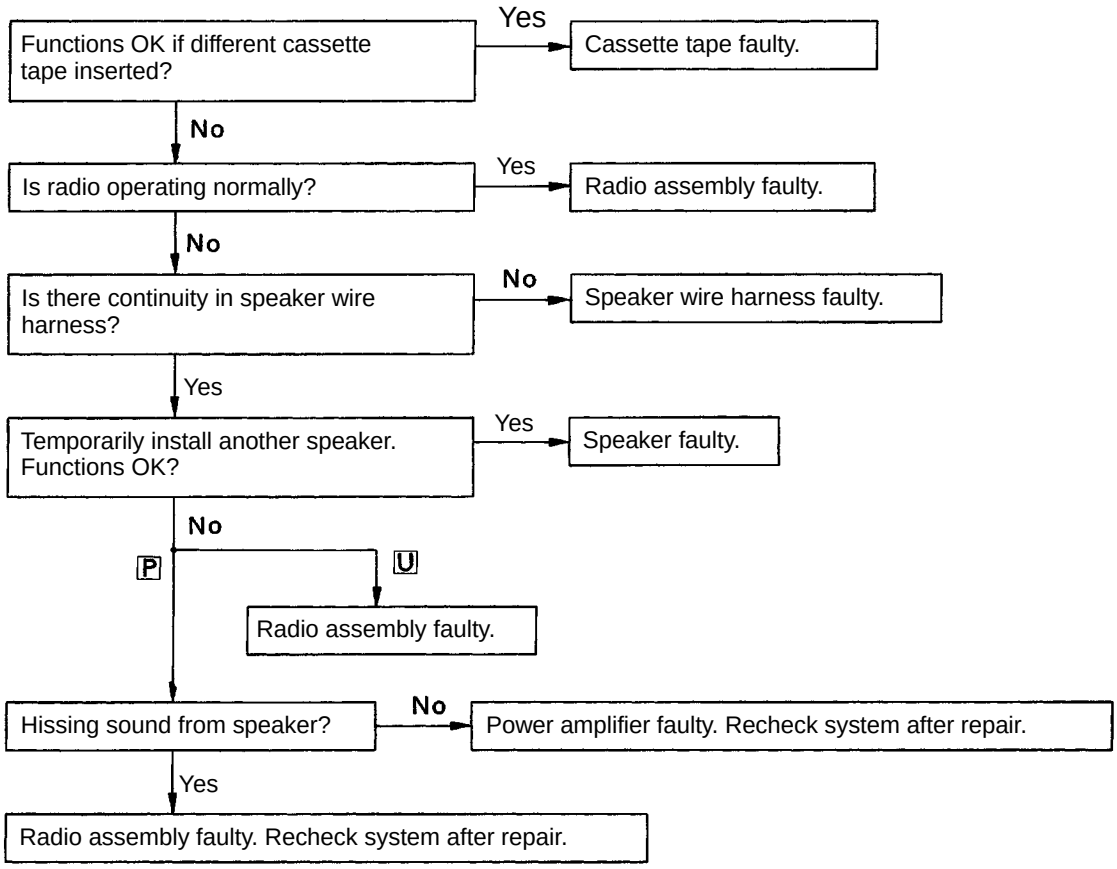

11 Tape Player — EITHER SPEAKER DOES NOT WORK

[U] : Radio – Tape Player Unit (Built–in Power Amplifier
[P] : Radio – Tape Player Unit (Separate Power Amplifier)

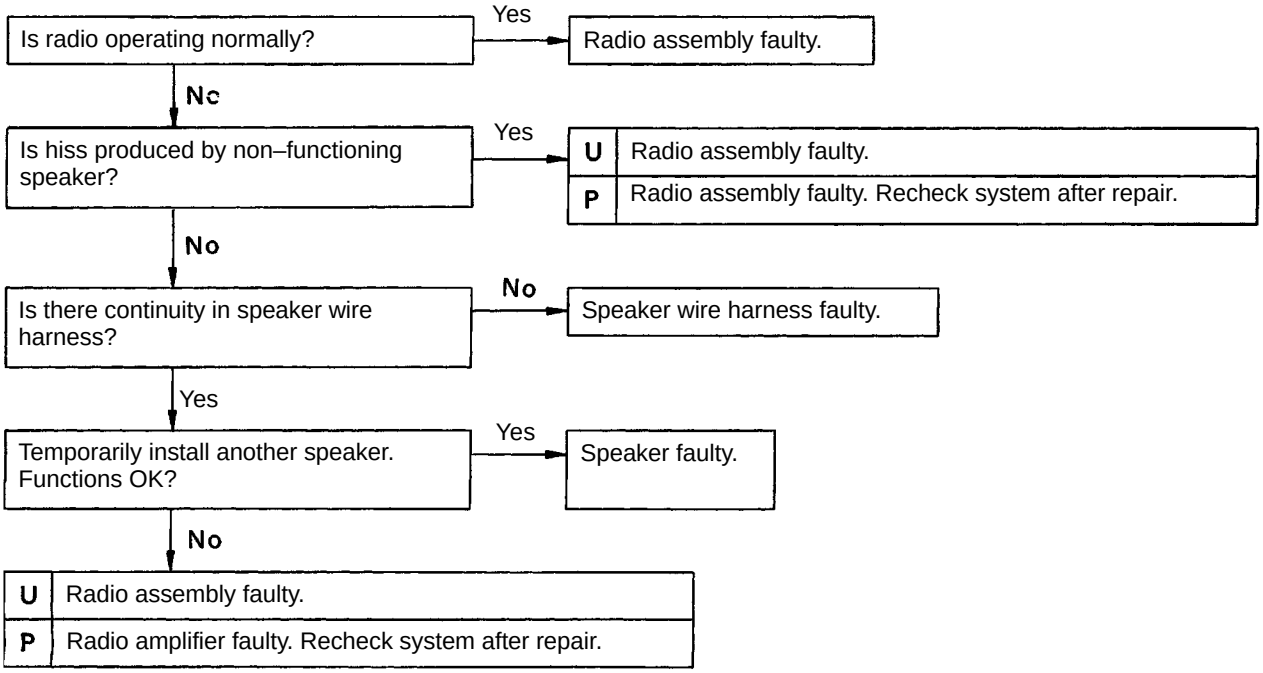

12 Tape Player SOUND QUALITY POOR (VOLUME PAINT)

[U]: Radio – Tape Player Unit (Built–in Power Amplifier)
[P] : Radio – Tape Player Unit (Separate Power Amplifier)

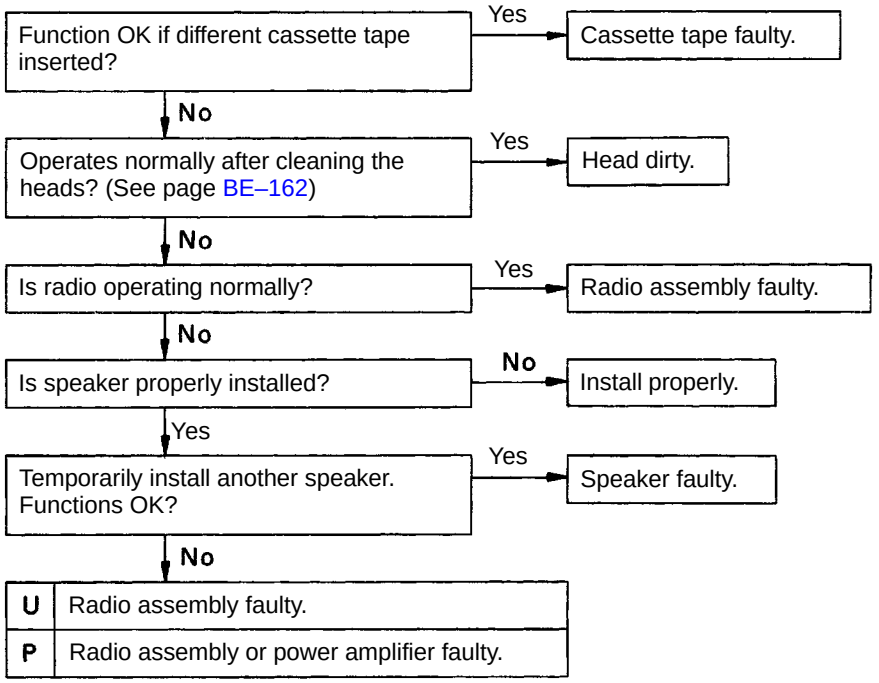

13 Tape Player TAPE JAMMED, MALFUNCTION WITH TAPE SPEED OR AUTO–REVERSE

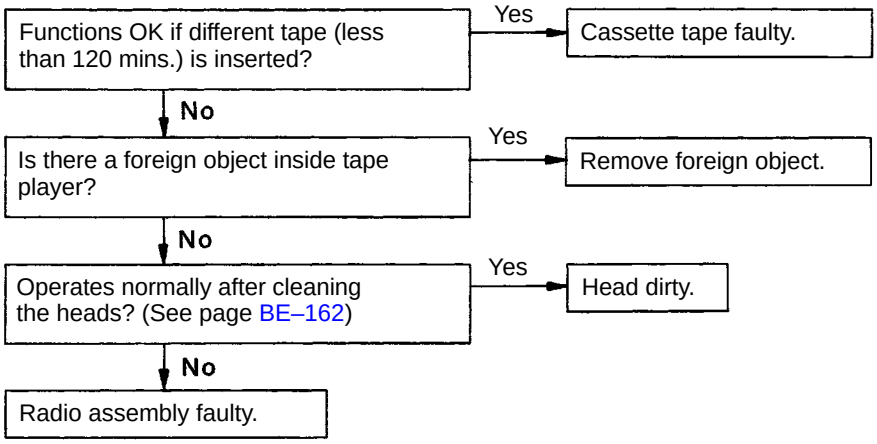

14 Tape Player APS, SKIP, RPT BUTTONS NOT OPERATING

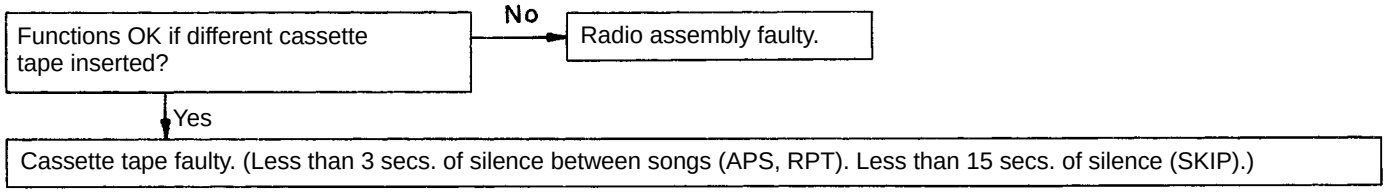

15 Tape Player CASSETTE TAPE WILL NOT EJECT

[U] : Radio – Tape Player Unit (Built–in Power Amplifier)
[P] : Radio – Tape Player Unit (Separate Power Amplifier)

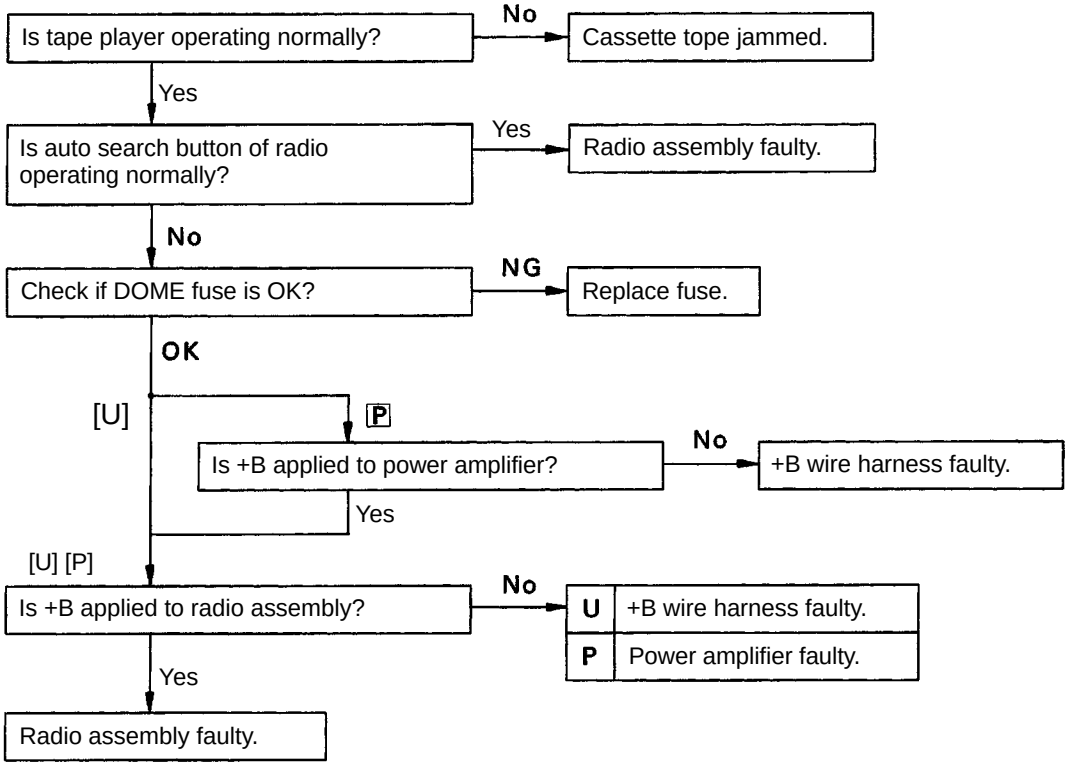

16 CD Player — CD CANNOT BE INSERTED

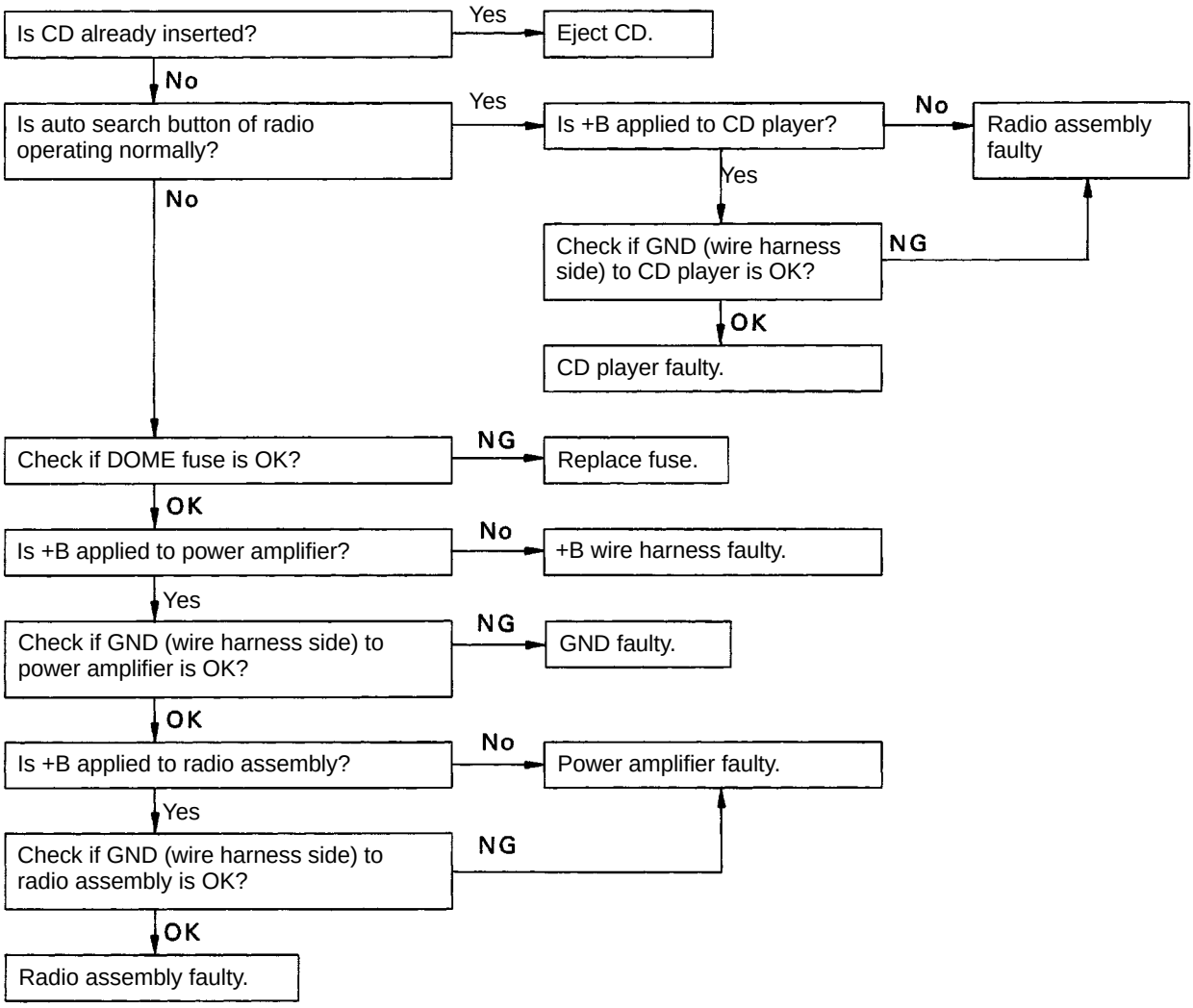

17 CD Player — CD INSERTS, BUT NO POWER

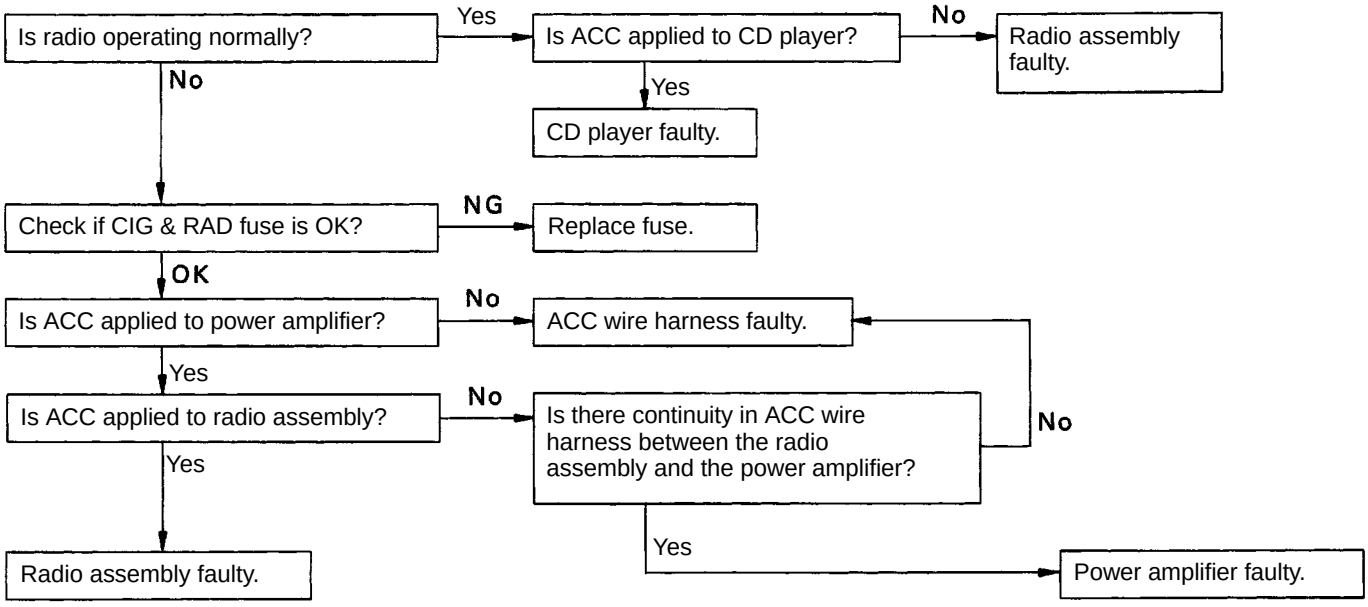

18 CD Player — POWER COMING IN, BUT CD PLAYER NOT OPERATING

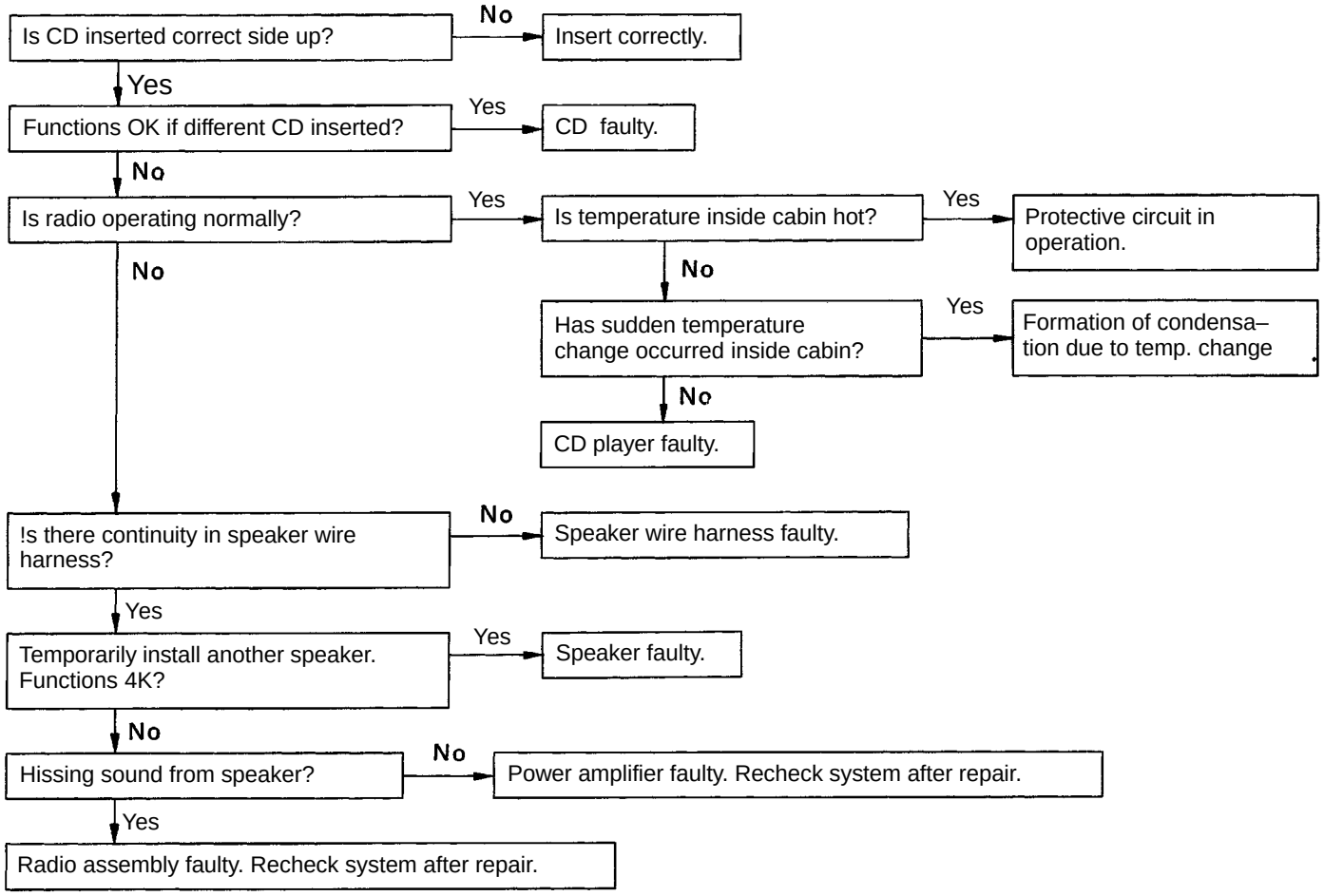

19 CD Player — SOUND JUMPS

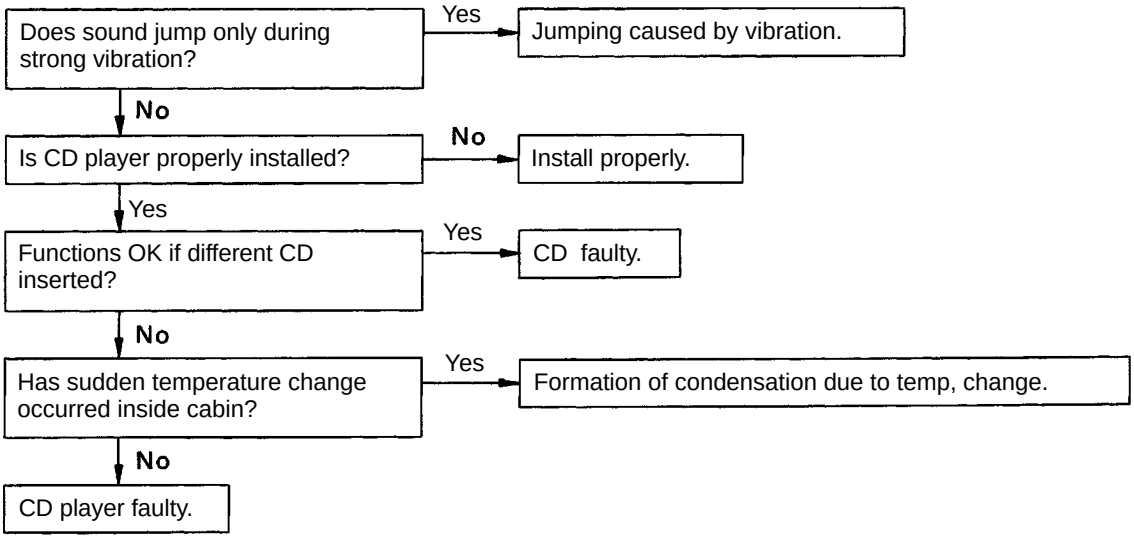

20 CD Player SOUND QUALITY POOR (VOLUME FAINT)

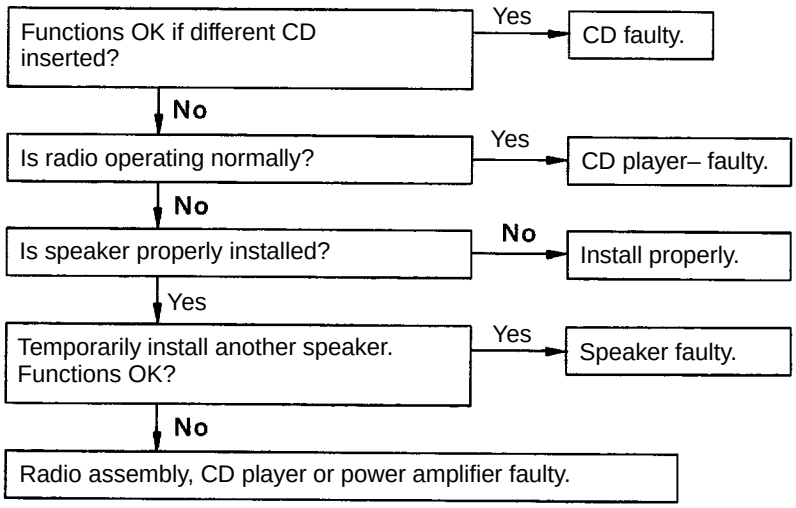

21 CD Player EITHER SPEAKER DOES NOT WORK

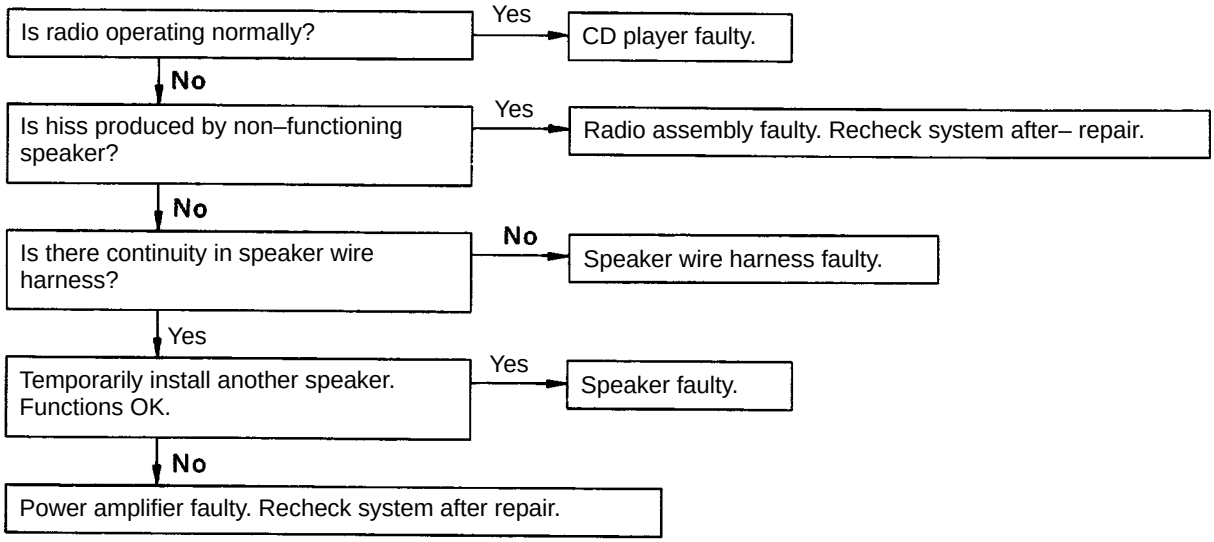

22 CD Player — CD WILL NOT EJECT

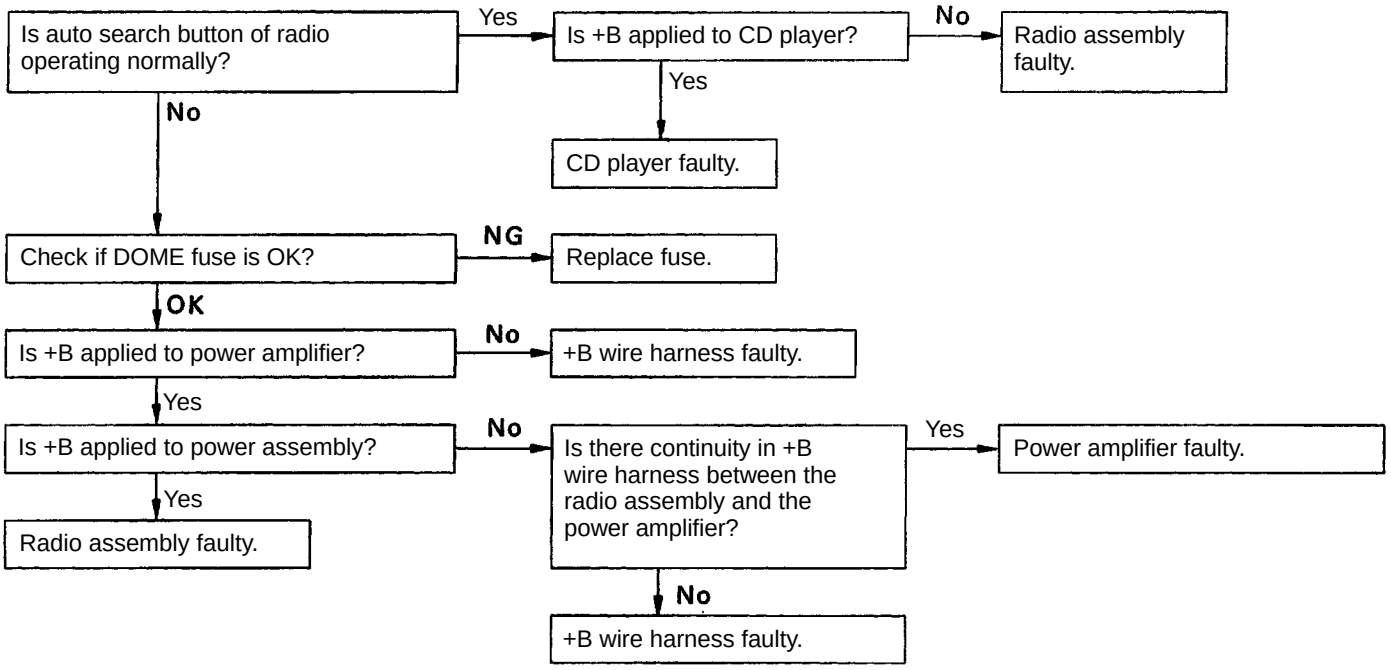

23 Antenna ANTENNA–RELATED

[P] : Antenna w/o Motor **[M] : Motor Antenna** **D : Motor Antenna and Glass Printed Antenna**

[P]

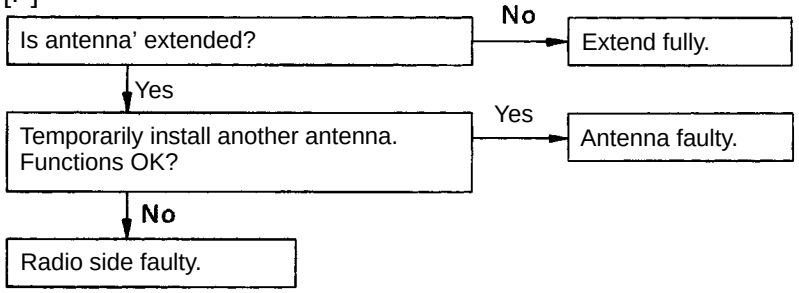

M D

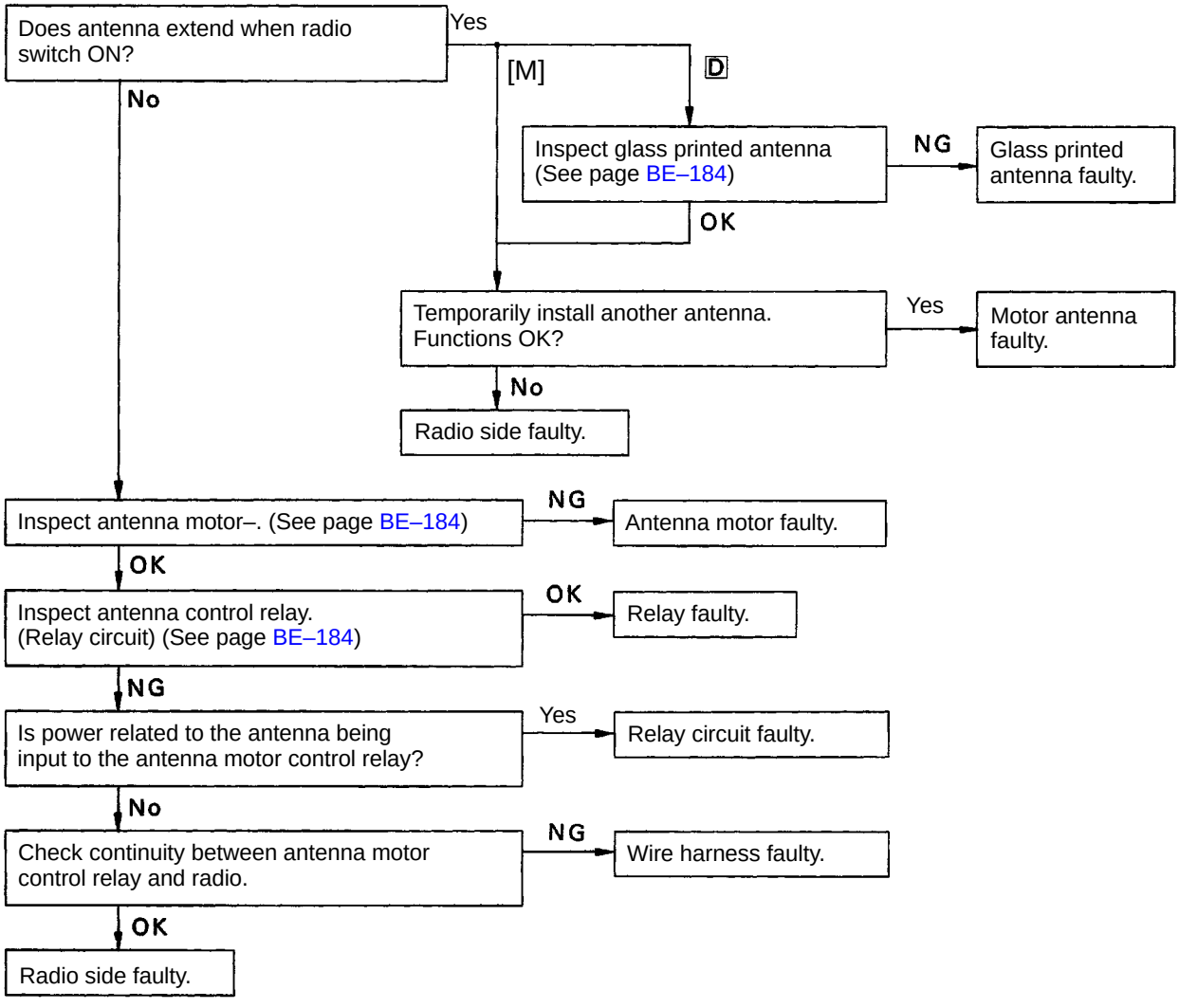

24 Noise — NOISE PRODUCED BY VIBRATION OR SHOCK WHILE DRIVING

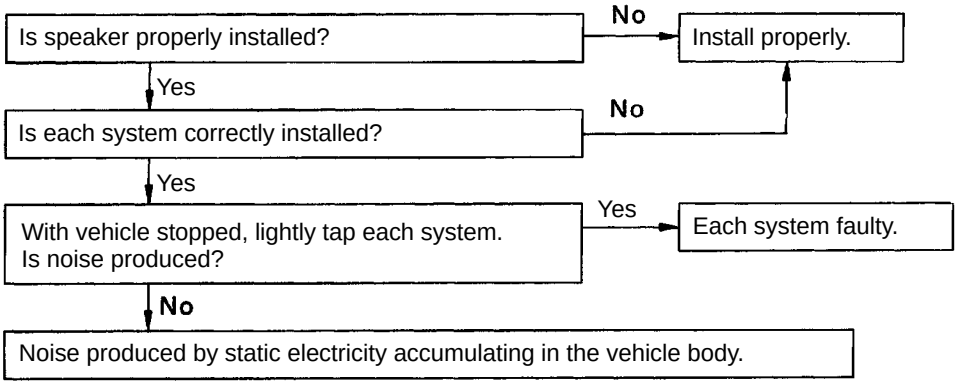

25 Noise — NOISE PRODUCED WHEN ENGINE STARTS

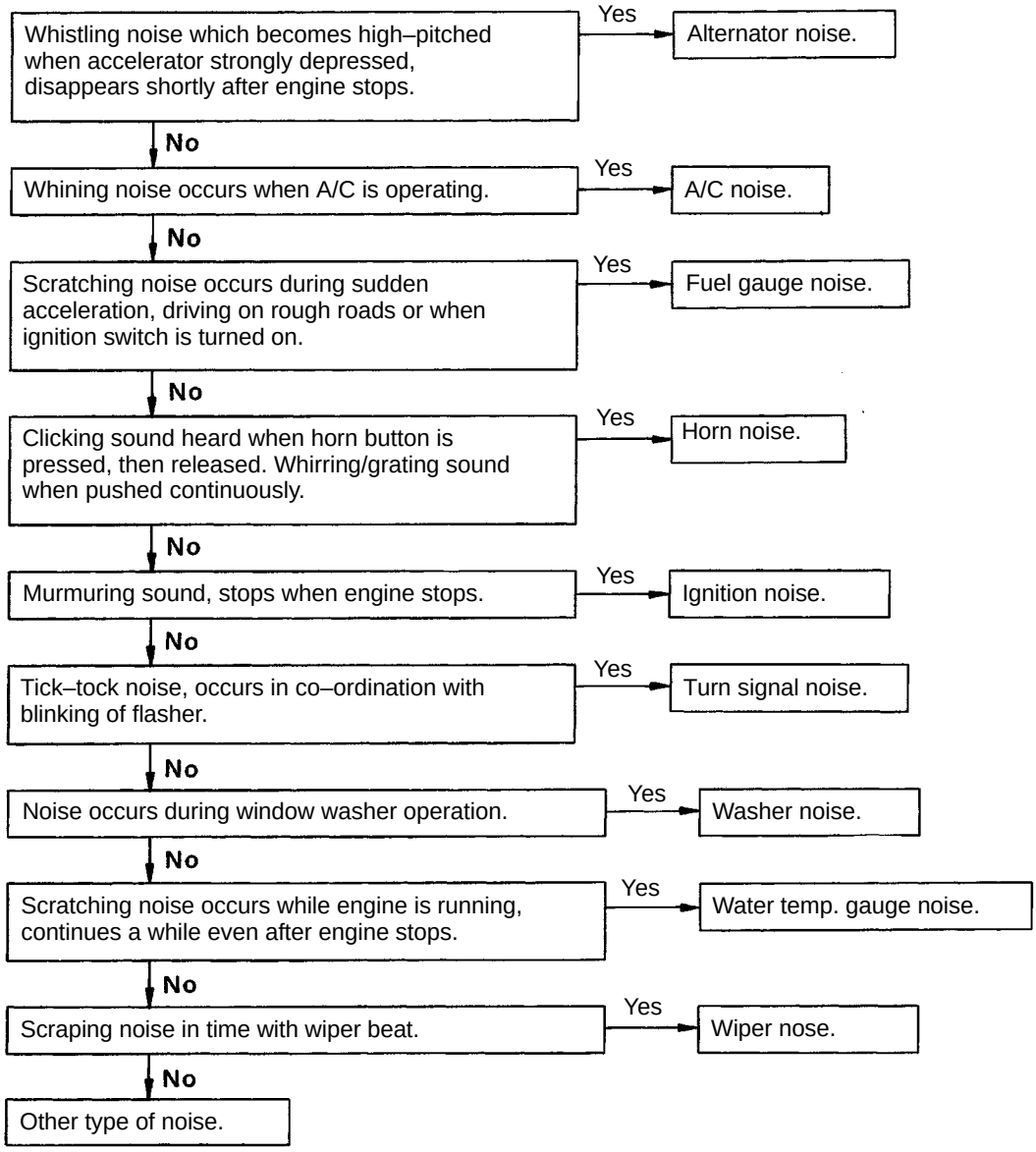

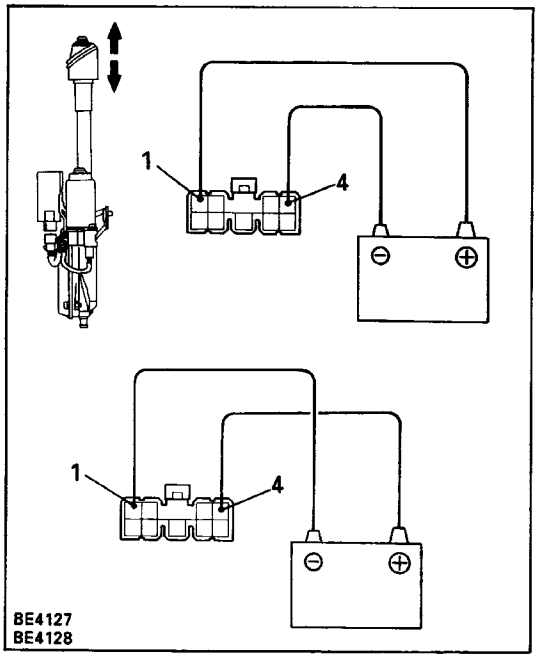

ANTENNA MOTOR

ANTENNA MOTOR INSPECTION

INSPECT ANTENNA MOTOR

(a) Connect the positive (+) lead from the battery to terminal 1 and the negative (–) lead to terminal 4.

(b) Check that the motor turns (moves upward).

NOTICE: These tests must be performed quickly (within 3–5 seconds) to prevent the coil from burning out.

(c) Then, reverse the polarity, check that the motor turns the opposite way (moves downward).

NOTICE: These tests must be performed quickly (within 3–5 seconds) to prevent the coil from burning out.

If operation is not as specified, replace the motor.

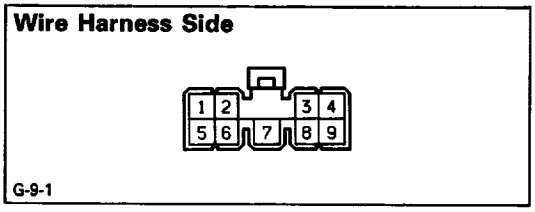

ANTENNA MOTOR CONTROL RELAY

ANTENNA MOTOR CONTROL RELAY INSPECTION

RELAY CIRCUIT

Disconnect the connector from the relay and inspect the connector on wire harness side as shown in the chart.

Check for	Tester connection	Condition		Specified value
Continuity	1–4	Constant		Continuity
	2 – Ground	Constant		Continuity
Voltage	3 – Ground	Constant		Battery voltage
	5 – Ground	Ignition switch position	LOCK	No voltage
			ACC or ON	Battery voltage
	6 – Ground	Ignition switch position	LOCK	No voltage
			ACC or ON, Radio switch and cassette OFF	No voltage
			ACC or ON, Radio switch or cassette ON	Battery voltage
	8 – Ground	Ignition switch position	LOCK	No voltage
			ACC or ON, Radio switch OFF or cassette ON	No voltage
			ACC or ON, Radio switch ON and cassette OFF	Battery voltage
	9 – Ground	Ignition switch position	LOCK or ACC	No voltage
			ON	Battery voltage

If circuit is as specified, replace the relay.

GLASS PRINTED ANTENNA

GLASS PRINTED ANTENNA INSPECTION

INSPECT GLASS PRINTED ANTENNA

(Use same procedure as for ”INSPECT DEFOGGER WIRES” or page BE–87.)

REPAIR GLASS PRINTED ANTENNA

(Use same procedure as for ”REPAIR DEFOGGER WIRES” or page BE–87)

BACK–UP LIGHT SYSTEM

PARTS LOCATION

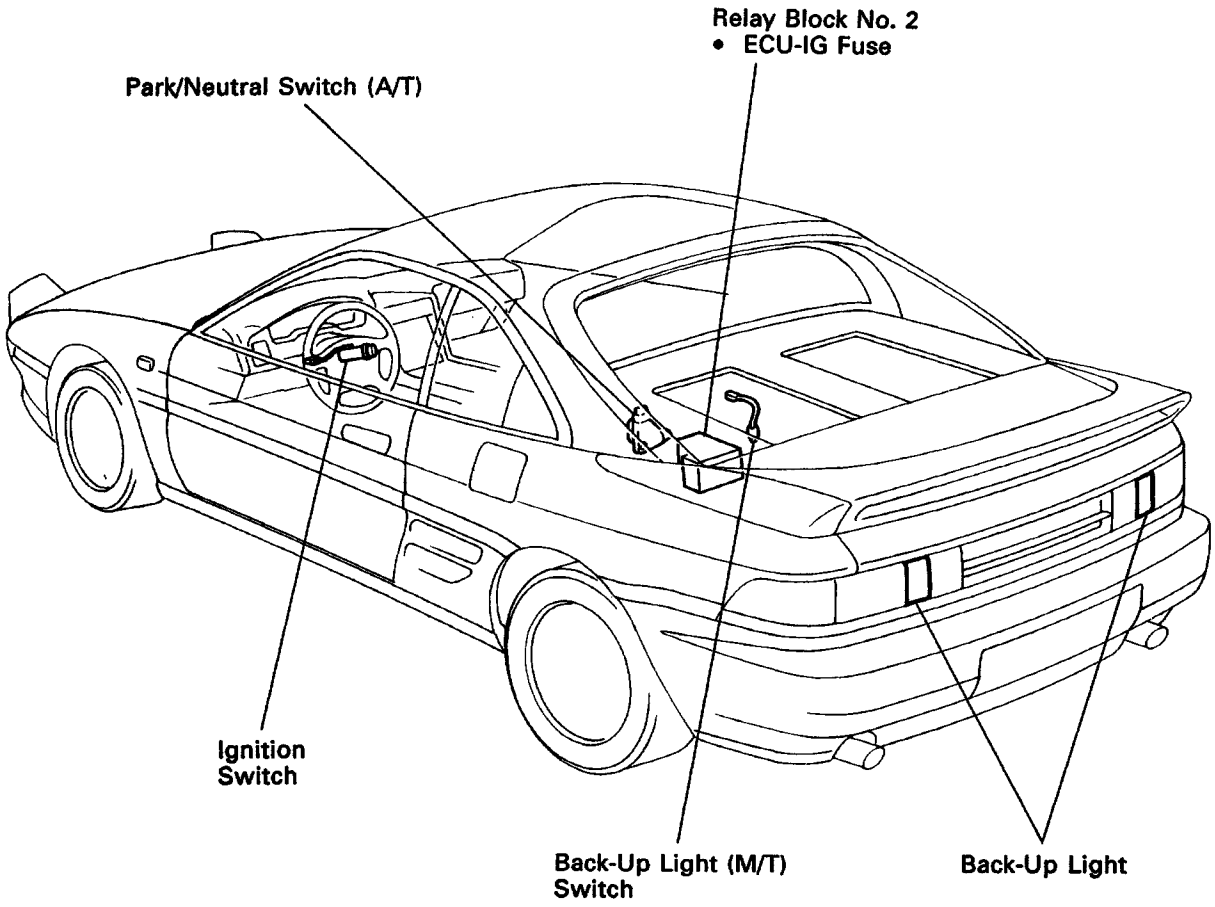

N04045

WIRING AND CONNECTOR DIAGRAMS

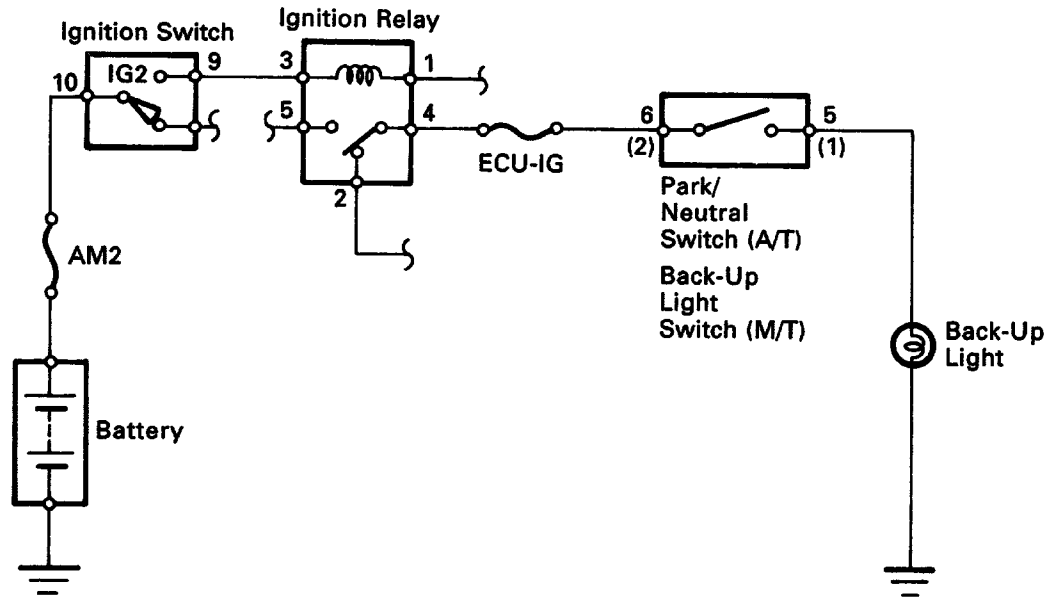

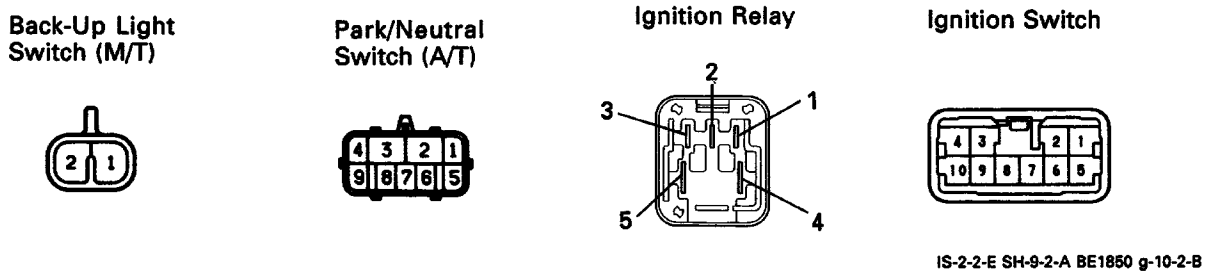

The POWER SOURCE CIRCUIT has been simplified. For full details, see page BE-9.

TROUBLESHOOTING

You will find the troubles easier using the table well shown below. In this table, each number shows the priority of causes in troubles. Check each part in order. If necessary, replace these parts.

Trouble / Part name	BE–11 Ignition Switch	BE–3 ECU–IG Fuse	BE–58 Ignition Relay	BE–58 AX–35 Back–Up Light Switch (M/T) Park/Neutral Switch (A/T)	Bulb	Wire Harness
Back–Up light does not light up.	2	1	3	4	6	5
Back–Up light remains always on.						1
Only one light does not light up.						1

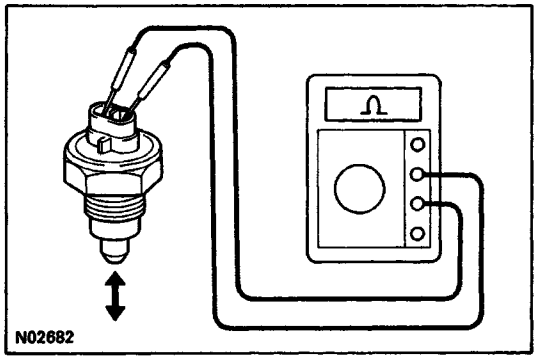

BACK–UP LIGHT SWITCH

BACK–UP LIGHT SWITCH INSPECTION

Check that there is continuity between terminals as shown.

Switch Position	Specified
Push	Continuity
Free	No continuity

If operation is not as specified, replace switch.

PARK/NEUTRAL SWITCH

PARK/NEUTRAL SWITCH INSPECTION

See page AX–35**.**

IGNITION SWITCH

IGNITION SWITCH INSPECTION

See page BE–11.

IGNITION RELAY

IGNITION RELAY INSPECTION

CONTINUITY

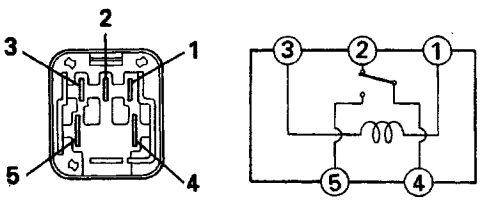

Terminal / Condition	1	2	3	4	5
Constant	○	○	○		
		○		○	
Apply battery voltage to terminals 1 and 3.				○	○

If continuity is not as specified, replace the relay.

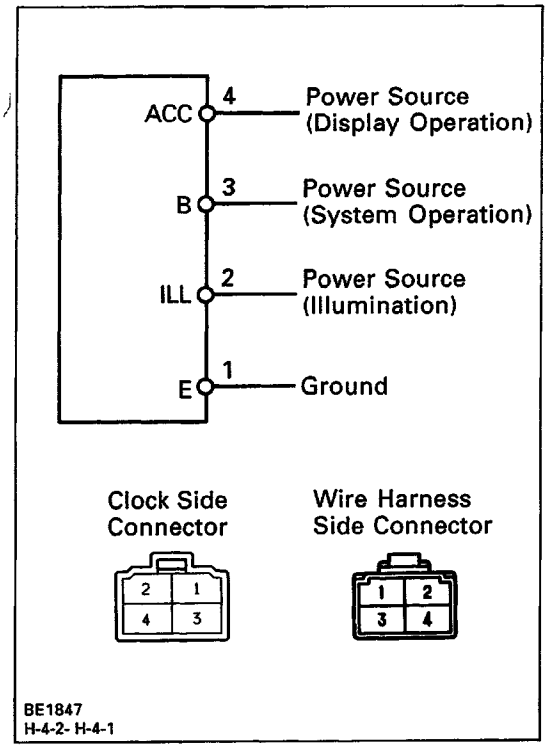

CLOCK

TROUBLESHOOTING

As shown in the illustration, those are clock circuit and connector diagrams. Inspect each terminal for applica–ble trouble.

Terminal		Condition	Specified value
1	E	Constant	Continuity
2	ILL	Turn light control switch ON	Battery Voltage
3	B	Constant	
4	ACC	Turn ignition switch ON	

Allowable error: ±1.5 seconds/day

COMBINATION METER

PARTS LOCATION

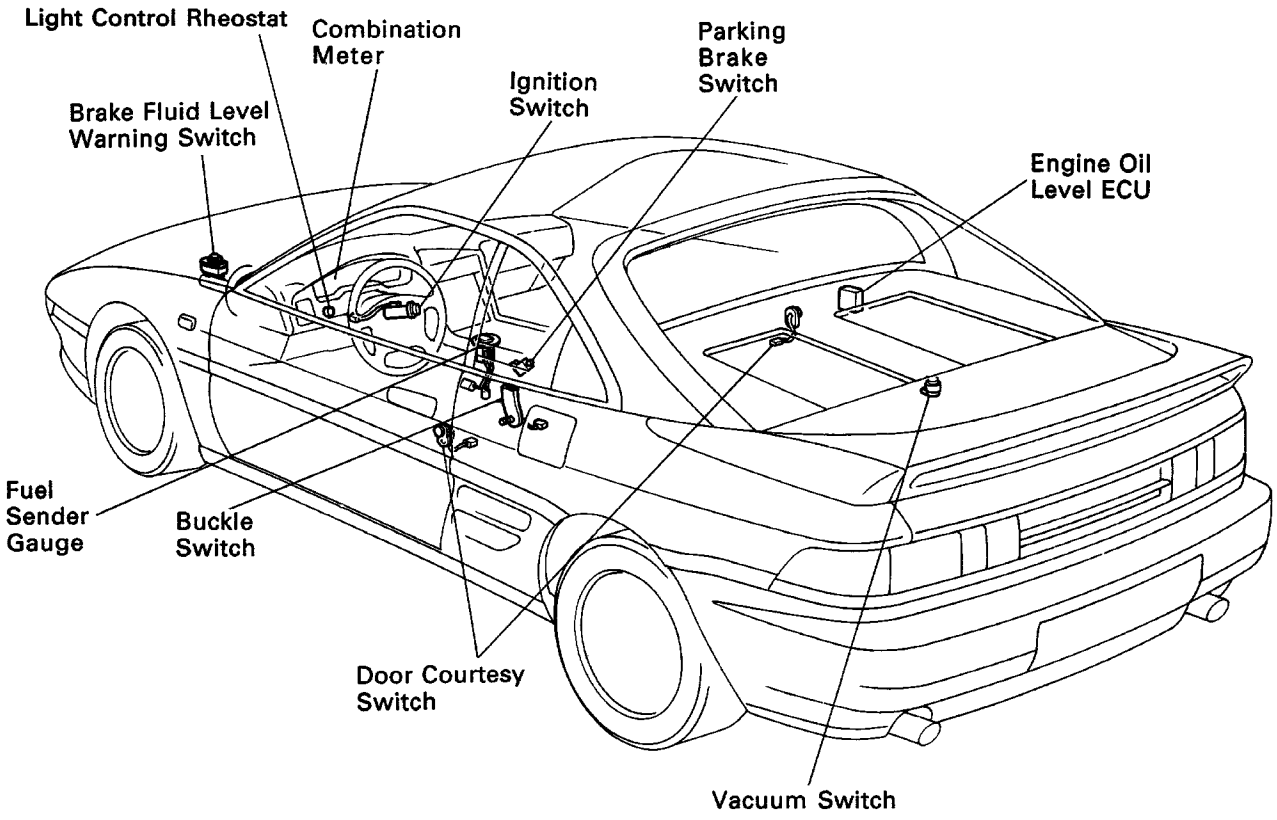

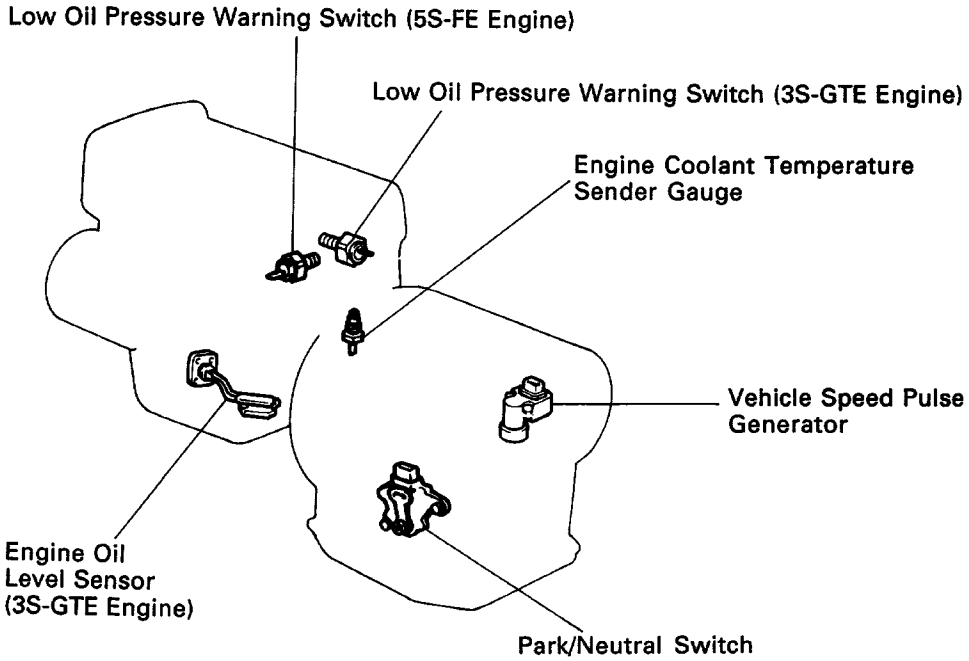

BE5236
BE5237

METER CIRCUIT

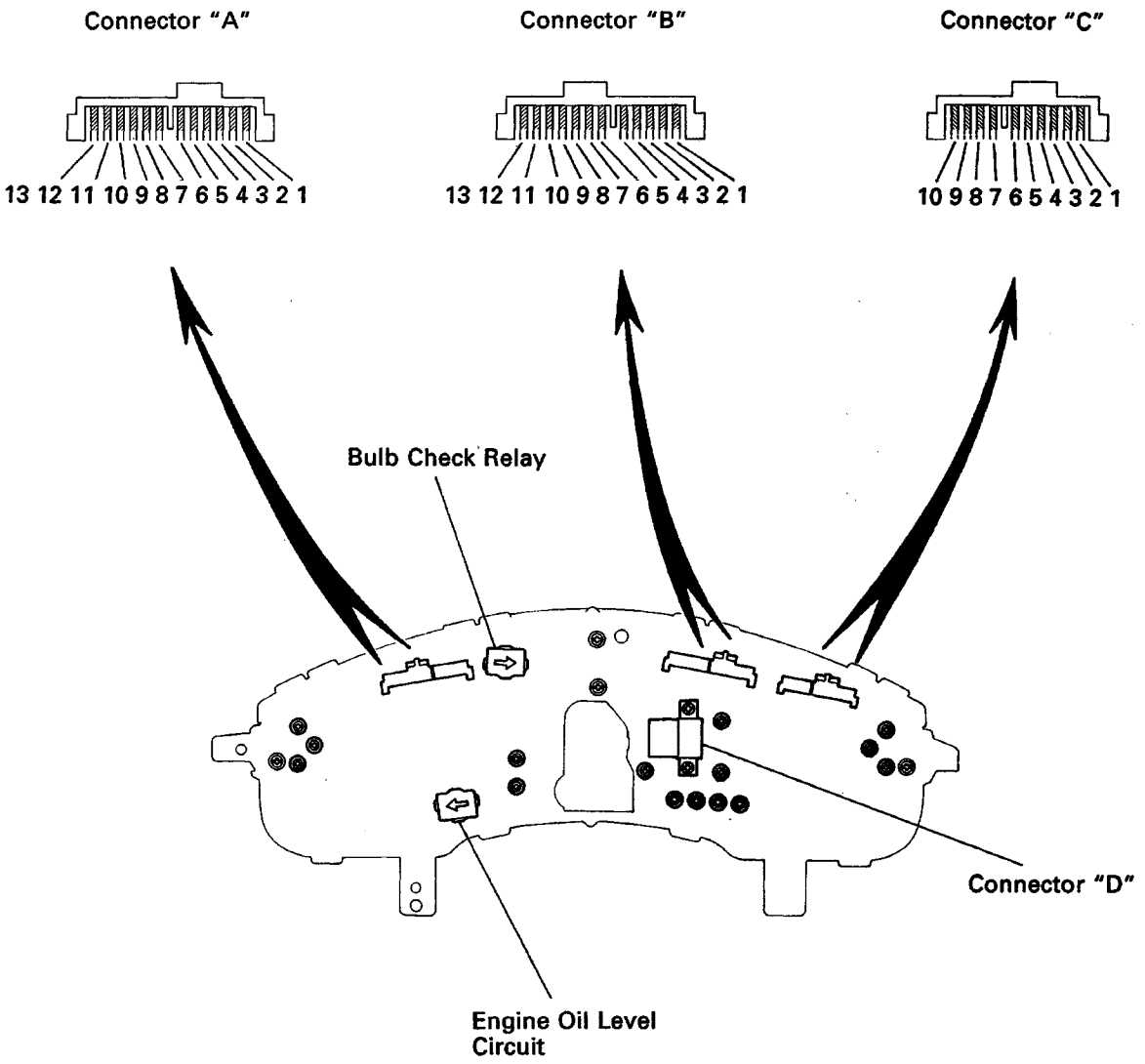

BE1266 BE1267 BE1270
N04047

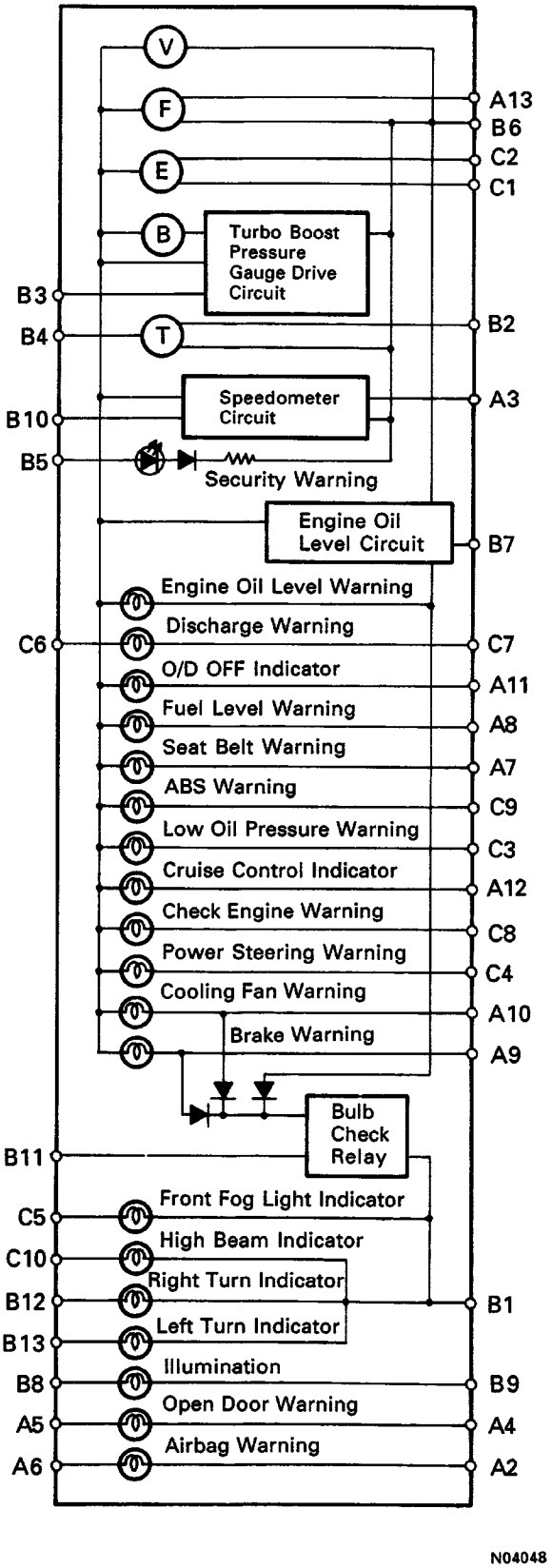

Ⓥ : Voltmeter
Ⓕ : Fuel Gauge
Ⓔ : Engine Coolant Temperature Gauge
Ⓑ : Turbo Booster Pressure Gauge
Ⓣ : Tachometer

No.		Wiring Connector Side
A	2	Airbag ECU
	3	Vehicle Speed Pulse Generator
	4	Door Courtesy Switch – terminal 2
	5	Fuse DOME
	6	Fuse ECU–B
	7	Seat Belt Warning Relay
	8	Fuel Sender Gauge – terminal 2
	9	Brake Fluid Level Warning Switch terminal 1 and Parking Brake Switch
	10	Cooling FAN ECU
	11	O/D OFF Switch
	12	Cruise Control ECU
	13	Fuel Sender Gauge – terminal 1
B	1	Ground
	2	Ignitor
	3	Turbo Pressure Sensor
	4	Fuse GAUGE
	5	Theft Deterrent ECU
	6	Ground
	7	Engine Oil Level ECU
	8	Taillight Control Relay
	9	Light Control Rheostat
	10	Speed Control Unit
	11	Starter Relay
	12	Turn Signal Switch
	13	Turn Signal Switch
C	1	Engine Coolant Temperature Sender Gauge
	2	Ground
	3	Low Oil Pressure Warning Switch
	4	Power Steering ECU
	5	Fog Light Switch
	6	Fuse IGN
	7	Alternator –terminal "L"
	8	Powertrain Control Module
	9	ABS ECU
	10	Headlight Dimmer Switch

SHIFT POSITION INDICATOR

Connector "D"



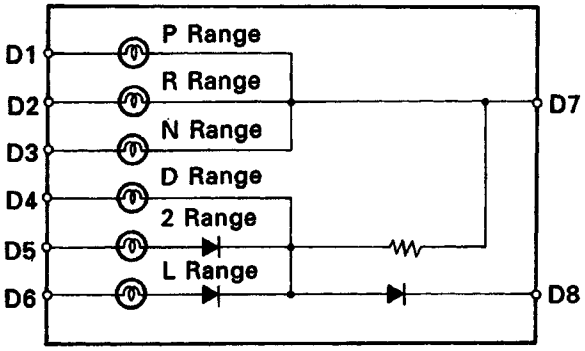

e-10-2
N04049

No.		Wiring Connector Side
D	1	Park/Neutral Switch
	2	Park/Neutral Switch
	3	Park/Neutral Switch
	4	Park/Neutral Switch
	5	Park/Neutral Switch
	6	Park/Neutral Switch
	7	Ground
	8	TAIL Fuse

TROUBLESHOOTING

You will find the troubles easier using the table well shown below. In this table, each number shows the priority of causes in troubles. Check each part in order. If necessary, replace these parts.

See page / Part name / Trouble	BE–3 GAUGE Fuse	BE–68 Combination Meter Wiring Circuit	BE–73 Vehicle Speed Pulse Generator	IG–6, 26 Igniter	BE–75 Fuel Sender Gauge	BE–74 Fuel Receiver Gauge	BE–74 Voltmeter	BE–76 Engine Coolant Temperature Sender Gauge	BE–76 Engine Coolant Temperature Receiver Gauge	BE–81 Turbo Boost Pressure Gauge	BE–82 Turbo Pressure Sensor	BE–81 Turbo Meter Drive Circuit	BE–3 TAIL Fuse	BE–83 Light Control Rheostat	– Bulb	– Wire Harness	– Other Parts
Tachometer, Fuel Gauge and Water Temperature Gauge do not operate	1	2														3	4*1
Speedometer does not operate.			1													2	3*2
Tachometer does not operate.		1*3		3												2	4*4
Voltmeter does not operate.							1									2	3
Fuel Gauge does not operate or abnormal operation.		3			2	1										4	
Engine Coolant Temperature Gauge does not operate or abnormal operation.		3						2	1							4	
Turbo boost pressure gauge does not operate.										1	2	3				4	5
All illumination lights do not light up.													1	2		3	4*5
Brightness does not change even when rheostat turned.														1		2	
Only one illumination light does not light up.															1	2	

*1 Refer to BE–68 inspect the meter circuit plate.

*2 Inspect the speedometer driven gear and drive gear or try another speedometer.

*3 Inspect the B4 terminal.

*4 Refer to BE–68 inspect the meter circuit plate or try another tachometer.

*5 Refer to BE–13 inspect the ”Taillight System”.

WARNING LIGHTS AND WARNING CHIME

See page / Part name / Trouble	BE–3 GAUGE Fuse	BE–3 IG2 Fuse	BE–3 ECU–B Fuse	BE–3 DOME Fuse	BE–78 Low Oil Presspre Warning Switch	BE–75 Fuse Level Warning Switch	BE–77 Engine Oil Level Sensor	BE–77 Engine Oil Level ECU	BE–83 Light Control Rheostat	BE–79 Brake Fluid Level Warning Switch	BE–79 Parking Brake Switch	BE–49 Door Courtesy Switch	BE–68 Combination eter Wiring Circuit	– Bulb	– Wire Harness	– Other Parts
Warning lights do not light up. (Except. Discharge, Airbag Door	1												2 *1		3	
Low oil pressure warning light does not light up.					3								2 *2	1	4	
Fuel level warning light does not light up.						3							2 *3	1	4	
ABS Warning light does not light up.														1	3	2 *4
Check engine warning light does not light up.														1	3	2 *5
Seat belt warning light does not light up.														1	2	
Discharge warning light does not light up.		1												2	3	4 *6
Engine oil level warning light does not light up.							2	3						1	4	
Meter illumination lights do not light up.									1					2	3	
Brake warning light does not light up.										4	3		2 *8	1	6	5 *9
Airbag warning light does not light up.			1											2	3	4 *10
Open door warning light does not light up.				1								4	3	2	5	

*1 Inspect B4 terminal.
*2 Inspect C3 terminal.
*3 Inspect A8 terminal.
*4 Inspect ABS ECU.
*5 Inspect Powertrain Control Module
*6 Inspect Bulb Check Relay and Alternator.
*7 Inspect the ”Taillight System”, ”Stop Light System”.
*8 Inspect A9 terminal.
*9 Inspect Bulb Check Relay.
*10 Inspect Airbag ECU.

INDICATOR LIGHTS

See page / Part name / Trouble	BE–3	I	AX–34	AX–35	BE–83	BE–68	I	I
	GAUGE Fuse	Bulb	O/D OFF Switch	Park/Neutral Switch	Light Control Rheostat	Combination Meter Wiring Circuit	Wire Harness	Other Parts
O/D OFF indicator light does not light up.		1	3			2 *1	4	
Cruise control indicator light does not light up.		1					3	2 *2
High beam indicator light does not light up.		1				2 *3	3	4 *4
Turn indicator light does not light up.		1				2 *5	3	4 *6
Shift indicator lights do not light up. (All)		1		3		2 *8	4	
Shift indicator lights do not light up. (L. 2. D)		1		3	4	2 *9	5	
Only one shift indicator does not light up.		1				2	3	
Indicator lights do not light up. (Except. Turn, HI–beam)	1						2	

*1 Inspect Terminal A11.
*2 Inspect Cruise Control ECU.
*3 Inspect C10 and B1 terminal.
*4 Inspect ”Headlight System”.
*5 Inspect B12, B13 and B1 terminal.
*6 Inspect ”Turn Signal and Hazard Warning System”.
*7 Inspect terminal 13 and 1.
*8 Inspect terminal 1, 2, 3, 4, 5, 6, 7 and 8.
*9 Inspect terminal 4, 5, 6 and 8.

SPEEDOMETER SYSTEM

SPEEDOMETER INSPECTION

INSPECT SPEEDOMETER (ON–VEHICLE)

(a) Using a speedometer tester, inspect the speedometer for allowable indication error and check the operation of the odometer.

HINT: The wear and tire over or under inflation will increase the indication error.

If error is excessive, replace the speedometer.

(b) Check the speedometer for pointer vibration and abnormal noise.

HINT: Pointer vibration can be caused by a loose speedometer cable.

(mph)

Standard indication	Allowable range	
	3S–GTE	5S–FE
20	18.5 – 21.5	18.5 – 21.5
40	38 – 41.5	38 – 41.5
60	58 – 62	57.5 – 61.5
80	78 – 82.5	77.5 – 82
100	98 – 103	97 – 102
120	118 – 123.5	116.5 – 122
140	138 – 144	136.5 – 142.5

(km/h)

Standard indication	Allowable range
20	18 – 23
40	40 – 44
60	60 – 64.5
80	80 – 85
100	100 – 105
120	120 – 125.5
140	140 – 146
160	160 – 167
180	180 – 188
200	200 – 209
220	220 – 230
240	240 – 251

VEHICLE SPEED PULSE GENERATOR

VEHICLE SPEED PULSE GENERATOR INSPECTION

INSPECT VEHICLE SPEED PULSE GENERATOR

(a) Connect the positive (+) lead from battery to terminal 1 and negative (–) lead to terminal 2.

(b) Connect the positive (+) lead from tester to terminal 3 and negative (–) lead to terminal 2.

(c) Revolve shaft.

(d) Check that there is voltage change from approx. 0V to 11V or more between terminal 3 and 2.

HINT: The voltage change should be 4 times per each revolution of the vehicle speed pulse generator shaft. If operation is not as specified, replace the generator.

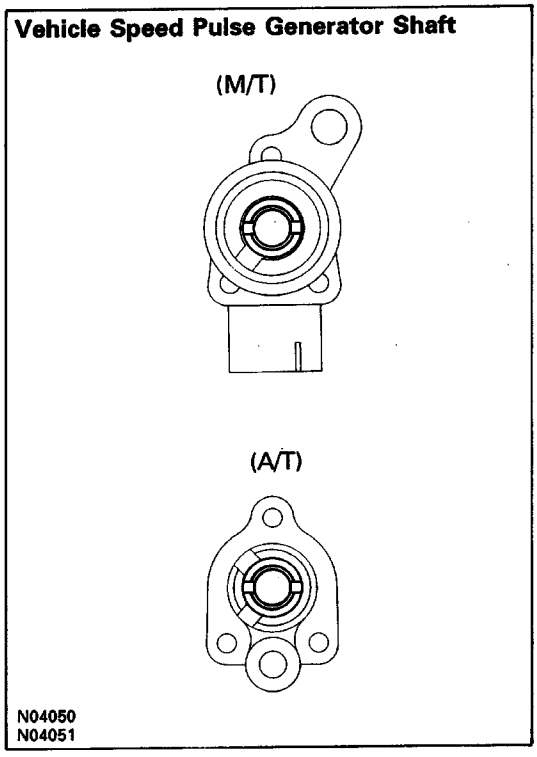

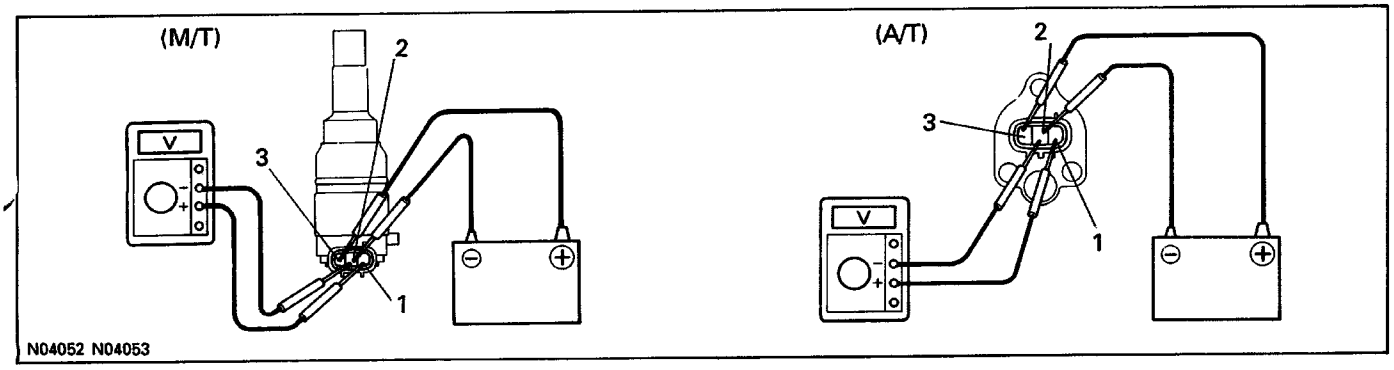

DC 13.5V, 25°C (77°F) rpm	
Standard indication	Allowable range
700	630 – 770
3,000	2,800 – 3,200
5,000	4,800 – 5,200
7,000	6,700 – 7,300

TACHOMETER SYSTEM

TACHOMETER INSPECTION

INSPECT TACHOMETER (ON–VEHICLE)

(a) Connect a tune–up test tachometer, and start the engine.

NOTICE:

- Reversing the connection of the tachometer will damage the transistors and diodes inside.
- When removing or installing the tachometer, be careful not to drop or subject it to heavy shocks.

(b) Compare the tester and tachometer indications.
If error is excessive, replace the tachometer.

VOLTMETER SYSTEM

VOLTMETER INSPECTION

INSPECT VOLTMETER (ON–VEHICLE)

Compare the tester and voltmeter indications.
If error is excessive, replace the voltmeter.

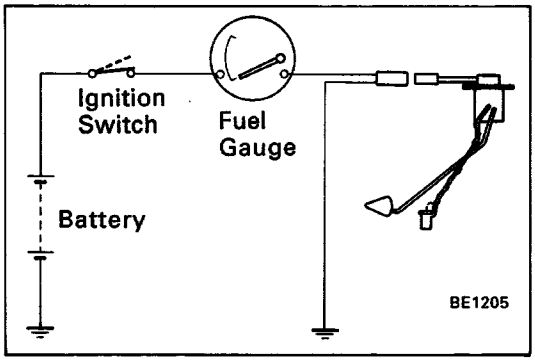

FUEL GAUGE SYSTEM

FUEL RECEIVER GAUGE INSPECTION

OPERATION

(a) Disconnect the connector from the sender gauge.
(b) Turn the ignition switch ON, check that the receiver gauge needle indicates EMPTY.

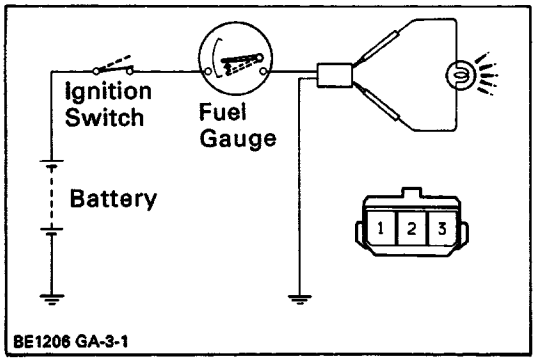

(c) Connect terminals 1 and 3 on the wire harness side con–nector through a 3.4 W test bulb.
(d) Turn the ignition switch ON, check that the bulb lights up and receiver gauge needle moves toward the full side.

HINT: Because of the silicon oil in the gauge, it will take a short time for the needle to stabilize.
If operation is not as specified, inspect the receiver gauge resistance.

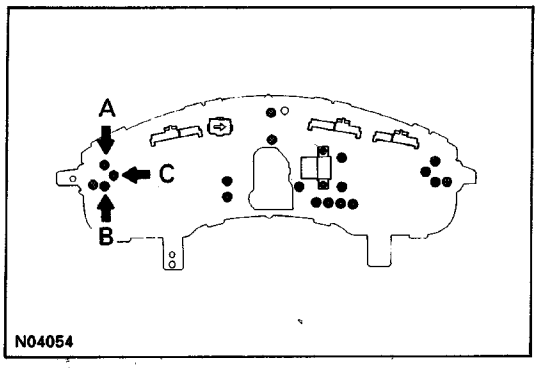

RESISTANCE

Measure the resistance between terminals.

Between terminals	Resistance (Ω)
A–B	Approx. 101.9
A–C	Approx. 203.2
B–C	Approx. 101.3

If resistance value is not as specified, replace the receiver gauge.

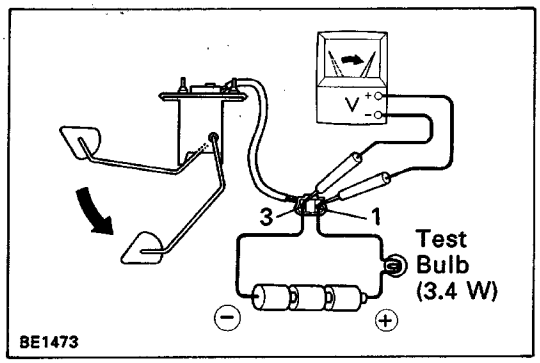

FUEL SENDER GAUGE INSPECTION

OPERATION

(a) Connect a series of three 1.5V dry cell batteries.
(b) Connect the positive W lead from the dry cell batteries to terminal 1 through a 3.4 w test bulb and the negative H lead to terminal 3.
(c) Check that the voltage rises between terminals 1 and 3 as the float is moved from the top to bottom position.

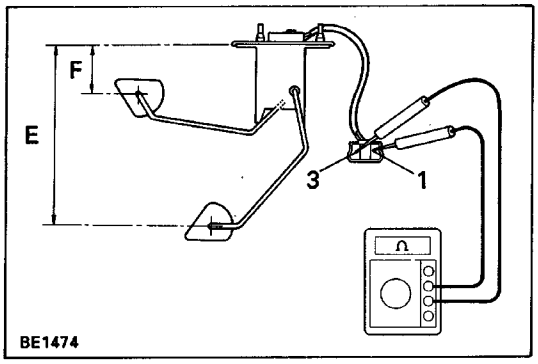

RESISTANCE

Measure the resistance between terminals 1 and 3 for each float position.

Float position mm (in.)		Resistance (Ω)
F	Approx. 59.9 (2.358)	3 ± 1.0
E	Approx. 228.1 (8.980)	110 ± 7.7

If resistance value is not as specified, replace the sender gauge.

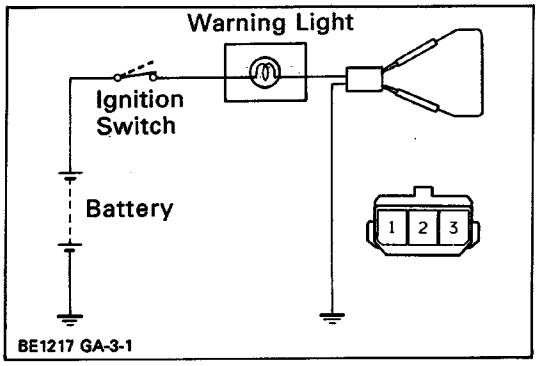

FUEL LEVEL WARNING SYSTEM

FUEL LEVEL WARNING LIGHT INSPECTION

INSPECT WARNING LIGHT

(a) Disconnect the connector from the sender gauge.
(b) Connect terminals 2 and 3 on the wire harness side connector.
(c) Turn the ignition switch ON, check that the warning light lights up.
If the warning light does not light up, test the bulb.

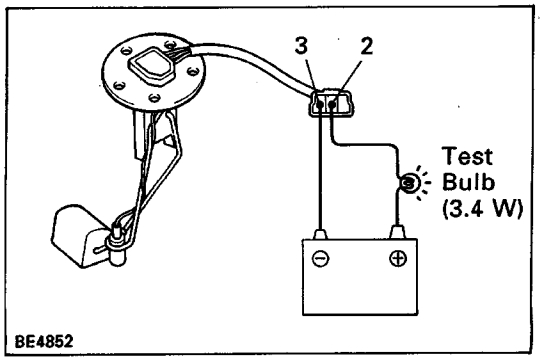

FUEL LEVEL WARNING SWITCH INSPECTION

INSPECT WARNING SWITCH

(a) Apply battery voltage between terminals 2 and 3 through a 3.4 W test bulb, check that the bulb lights up.

HINT: It will take a short time for the bulb to light up.

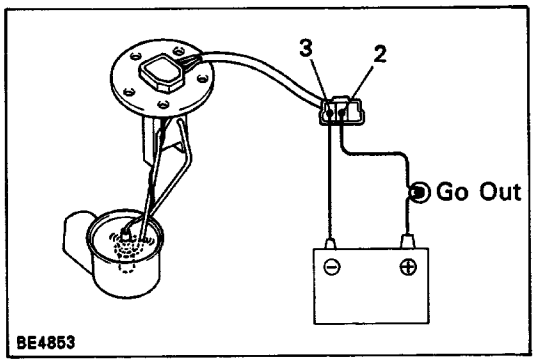

(b) Submerge the switch in fuel, check that the bulb goes out.
If operation is not as specified, replace the sender gauge.

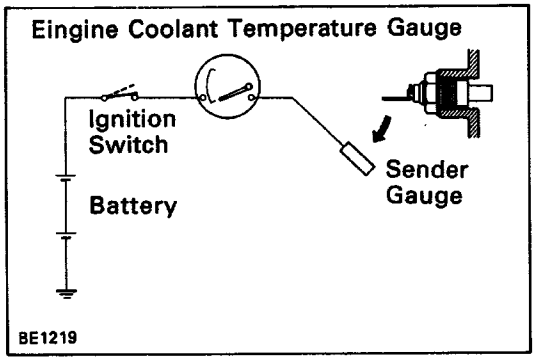

ENGINE COOLANT TEMPERATURE GAUGE SYSTEM

ENGINE COOLANT TEMPERATURE RECEIVER GAUGE INSPECTION

OPERATION

(a) Disconnect the connector from the sender gauge.
(b) Turn the ignition switch ON, check that the receiver gauge needle indicates COOL.

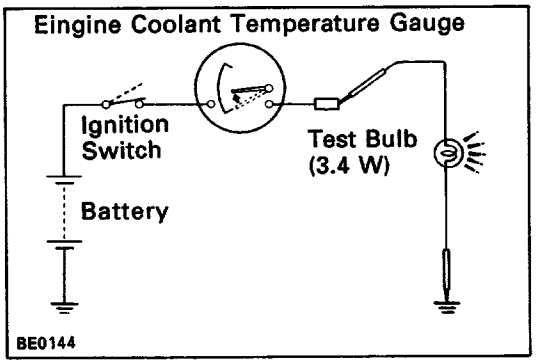

(c) Ground terminal on the wire harness side connector through a 3.4 W test bulb.
(d) Turn the ignition switch ON, check that the bulb lights up and receiver gauge needle moves toward the hot side.

If operation is as specified, replace the sender gauge. Then, recheck the system.
If operation is not as specified, measure the receiver gauge resistance.

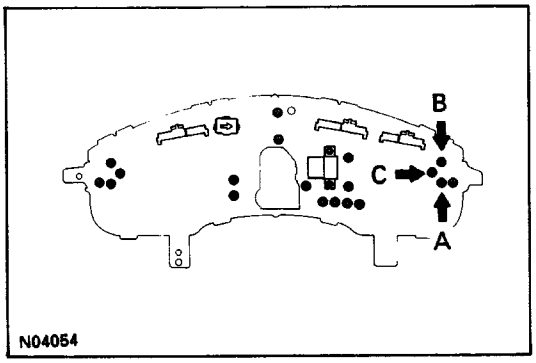

RESISTANCE

Measure the resistance between terminals.
HINT: Connect the test leads so that the current from the ohmmeter can flow according to the chart order.

Between terminals	Resistance (Ω)
A–B	Approx. 54
A–C	Approx. 146.2
B–C	Approx. 200.2

If resistance value is not as specified, replace the re–ceiver gauge.

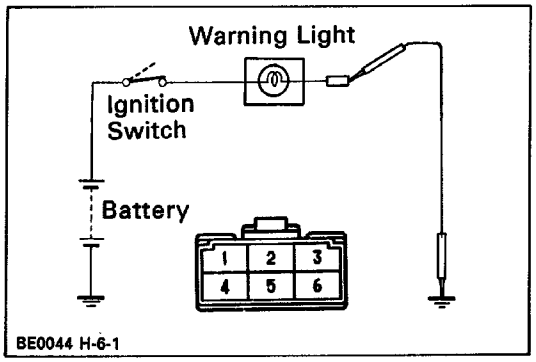

ENGINE OIL LEVEL WARNING SYSTEM

ENGINE OIL LEVEL WARNING LIGHT INSPECTION

INSPECT WARNING LIGHT

(a) Disconnect the connector from the engine oil level ECU.
(b) Ground terminal 1 on the wire harness side connector.
(e) Turn the ignition switch ON, check that the warning light lights up.
If the warning light does not light up, test the bulb.

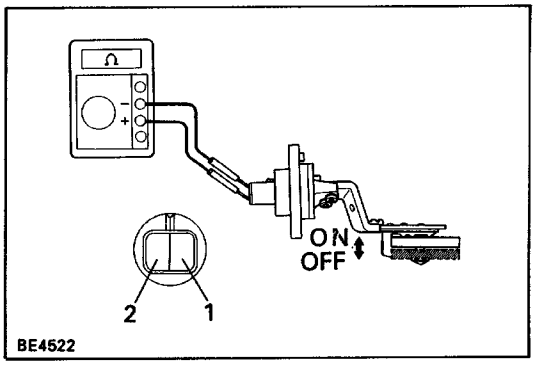

ENGINE OIL LEVEL WARNING SENSOR INSPECTION

INSPECT ENGINE OIL LEVEL WARNING SENSOR

(a) Check that there is continuity between terminals with the switch each position.

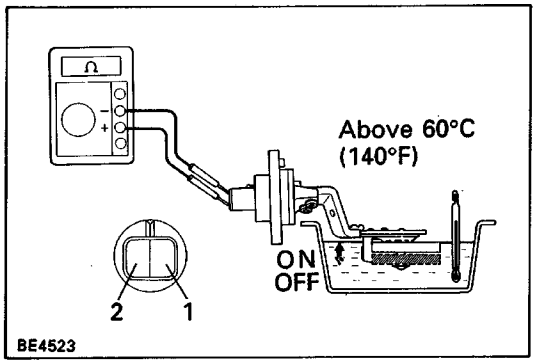

(b) Heat the switch to above 60˚C 114˚F) in an oil bath.
(c) Check that there is continuity between terminals with the switch ON (float up).
(d) Check that there is no continuity between terminals with the switch OFF (float down).
If operation is not as specified, replace the switch.

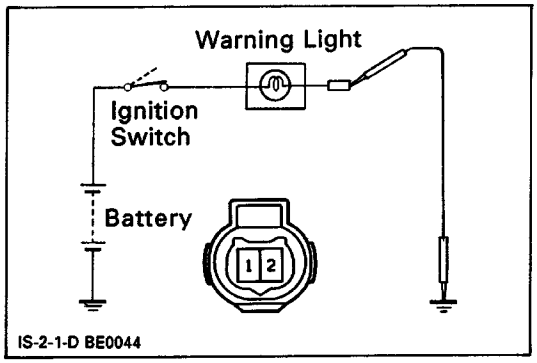

ENGINE OIL LEVEL ECU INSPECTION
OPERATION

(a) Disconnect the connector from the engine oil level sensor.
(b) Ground terminal 1 on the wire harness side connector.
(c) Turn the ignition switch ON, check that the warning light lights up approximately 40 seconds later.
If operation is not as specified, inspect the relay circuit.

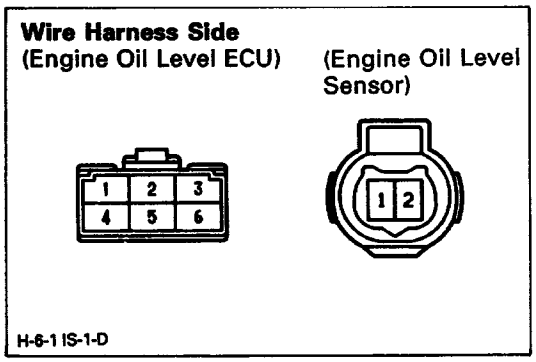

RELAY CIRCUIT

(a) Disconnect the connectors from the engine oil level ECU and engine oil level sensor.

(b) Inspect the connectors on the wire harness side as shown in the chart.

Check for	Tester connection	Condition		Specified value
Continuity	2/6–1/2	Constant		Continuity
	5/6–2/2	Constant		Continuity
Voltage	3I6 – Ground	Engine condition	Stopped	No voltage
			Running	Battery voltage
	6/6 – Ground	Ignition switch position	LOCK or ACC	No voltage
			ON	Battery voltage

If circuit is as specified, replace the engine oil level ECU,

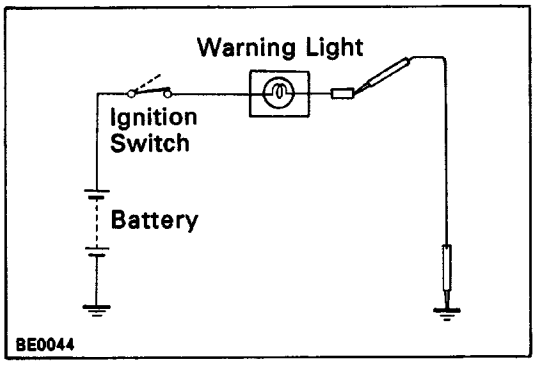

LOW OIL PRESSURE WARNING SYSTEM

LOW OIL PRESSURE WARNING LIGHT INSPECTION

INSPECT WARNING LIGHT

(a) Disconnect the connector from the warning switch and ground terminal on the wire harness side connector.

(b) Turn the ignition switch ON, check that the warning light lights up.

If the warning light does not light up, test the bulb.

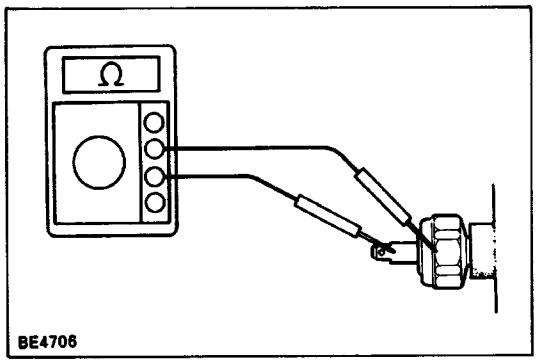

LOW OIL PRESSURE WARNING SWITCH INSPECTION

INSPECT LOW OIL PRESSURE WARNING SWITCH

(a) Check that there is continuity between terminal and ground with the engine stopped.

(b) Check that there is no continuity between terminal and ground with the engine running.

HINT: Oil pressure should be over 49 kPa (0.5 kgf/cm^2, 7.1 psi).

If operation is not as specified, replace the switch.

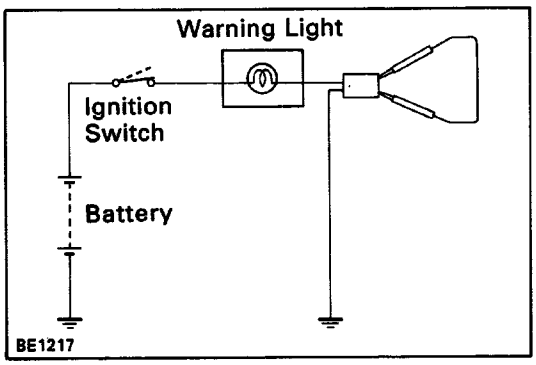

BRAKE WARNING SYSTEM

BRAKE WARNING LIGHT INSPECTION

INSPECT WARNING LIGHT

(a) Disconnect the connectors from the brake fluid level warning switch and parking brake switch.

(b) Connect terminals on the wire harness side of the level warning switch connector.

(e) Turn the ignition switch ON, check that the warning light lights up.

If the warning light does not light up, test the bulb

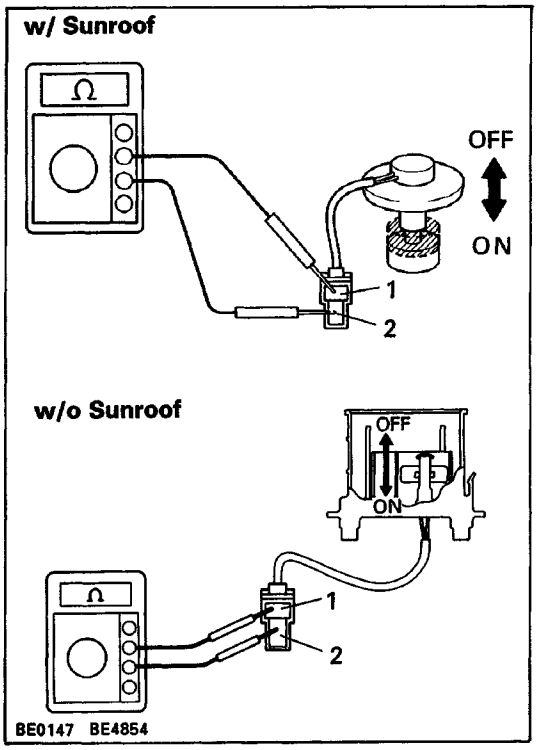

BRAKE FLUID LEVEL WARNING SWITCH INSPECTION

INSPECT BRAKE FLUID LEVEL WARNING SWITCH

(a) Check that there is no continuity between terminals with the switch OFF (float up).

(b) Check that there is continuity between terminals with the switch ON (float down).

If operation is not as specified, replace the switch.

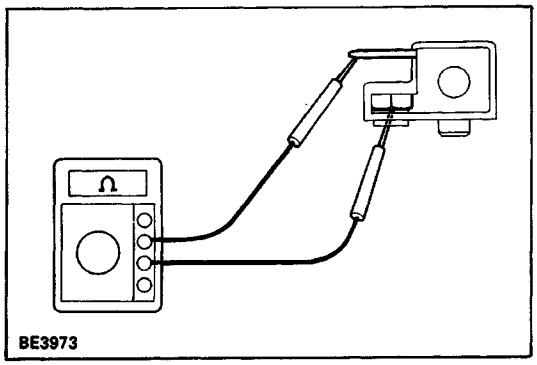

PARKING BRAKE SWITCH INSPECTION

INSPECT PARKING BRAKE SWITCH

(a) Check that there is continuity between terminals with the switch ON (switch pin released).

(b) Check that there is no continuity between terminals with the switch OFF (switch pin pushed in).

SEAT BELT WARNING SYSTEM

WIRING DIAGRAM

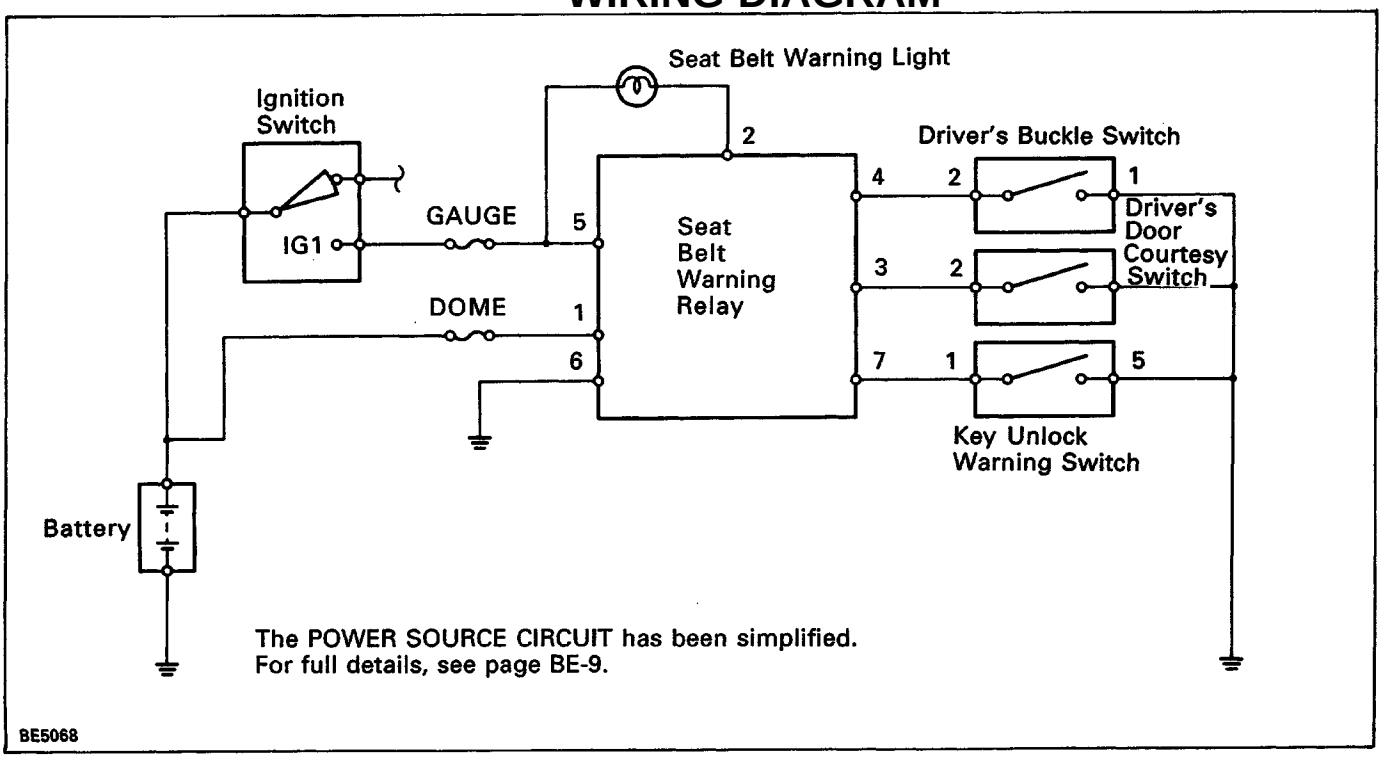

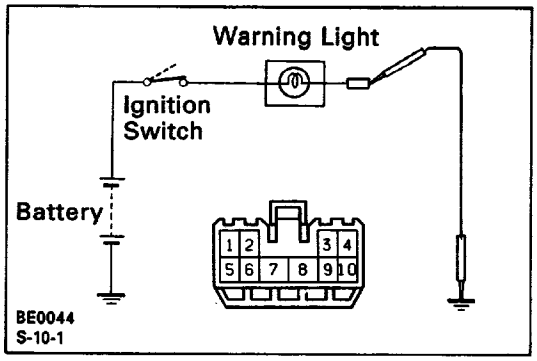

SEAT BELT LEVEL WARNING LIGHT INSPECTION

INSPECT WARNING LIGHT

(a) Disconnect the connector from the seat belt warning relay.
(b) Ground terminal 5 on the wire harness side.
(c) Turn the ignition switch ON, check that the warning light lights up.
If the warning lights does not light up, test the bulb.

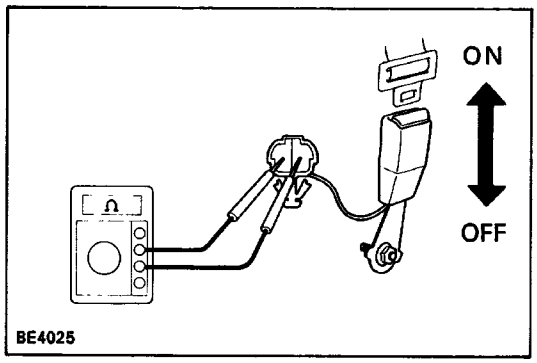

BUCKLE SWITCH INSPECTION

INSPECT BUCKLE SWITCH

(a) Check that there is continuity between terminals on the switch side connector with the switch ON (belt fastened).
(b) Check that there is no continuity between terminals on the switch side connector with the switch OFF (belt unfastened).
If operation is not as specified, replace the seat belt inner.

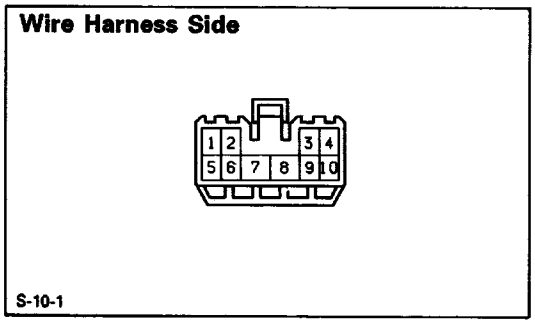

SEAT BELT WARNING RELAY INSPECTION

RELAY CIRCUIT

Disconnect connector and inspect connector on wire harness side as shown in the chart.

Check for–	Tester connection	Condition		Specified value
Continuity	3 – Ground	Driver's door courtesy switch position	OFF (door closed)	No continuity
			ON (door– opened)	Continuity
	4 – Ground	Driver's buckle switch position	OFF (seat belt unfastened)	No continuity
			ON (seat belt fastened)	Continuity
	6 – Ground	Constant		Continuity
	7 – Ground	Key unlock warning switch position	OFF (ignition key removed)	No continuity
			ON (ignition key set)	Continuity
Voltage	1– Ground	Constant		Battery voltage
	2 – Ground 5 – Ground	Ignition switch position	LOCK or ACC	No voltage
			ON	Battery voltage

If circuit is as specified, replace the relay.

DOOR COURTESY SWITCH INSPECTION

See Interior Light System on page BE–49.

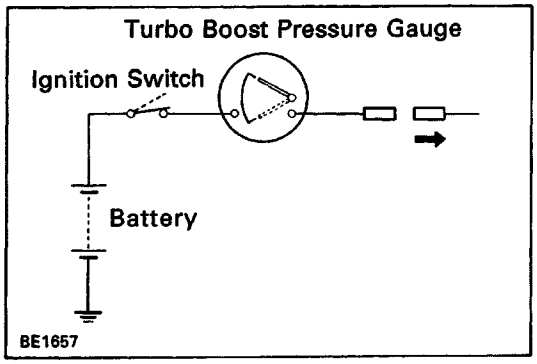

TURBO BOOST PRESSURE GAUGE SYSTEM

TURBO BOOST PRESSURE GAUGE INSPECTION

OPERATION

(a) Disconnect the connector from the pressure sensor.

(b) Turn the ignition switch ON, check that the gauge needle moves to upper position.

(c) Ground terminal 2 on the wire harness side.
Check that the gauge needle moves to lower position.
If operation is not as specified, inspect the turbo boost pressure gauge drive circuit and resistance.

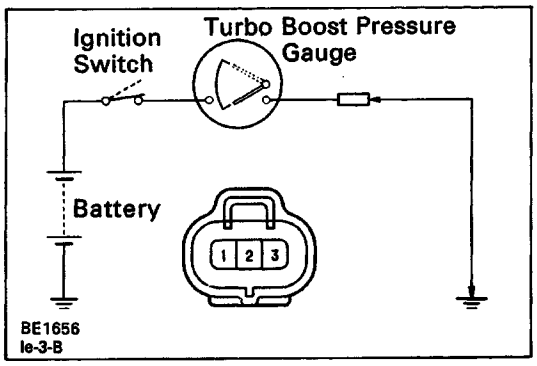

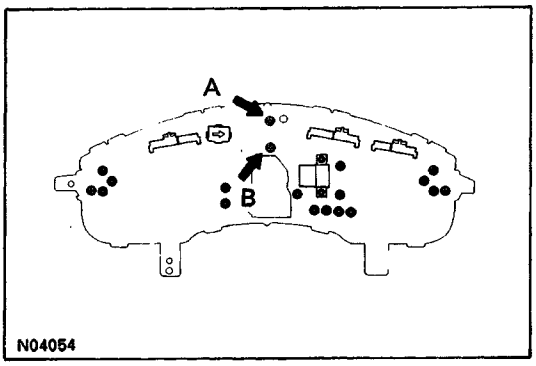

RESISTANCE

Measure the resistance between terminals A and B.

Resistance: Approx. 72 Ω

If resistance value is not as specified, replace the turbo boost pressure gauge.

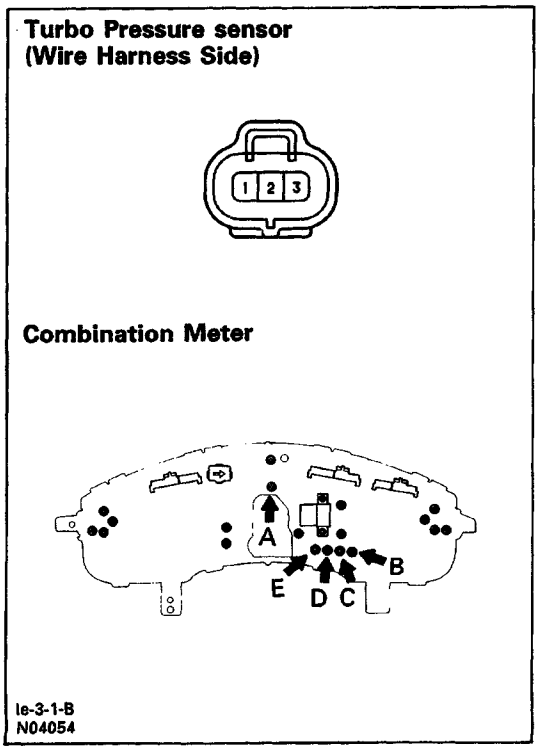

DRIVE CIRCUIT

(a) Disconnect the connector from the turbo pressure sensor.

(b) Remove the combination meter with connected three connectors.

(c) Inspect the connector on the wire harness side and terminals of the turbo boost pressure gauge drive circuit as shown in the chart.

Check for	Tester– connection	Condition		Specified value
Continuity	A–B	Constant		Continuity
	C–2	Constant		Continuity
	D – Ground	Constant		Continuity
	1 – Ground	Constant		Continuity
Voltage	E – Ground	Ignition switch position	LOCK or ACC	No voltage
			ON	Battery voltage
	3 – Ground	Ignition switch position	LOCK or– ACC	No voltage
			ON	Battery voltage

If circuit is as specified, replace the drive circuit.

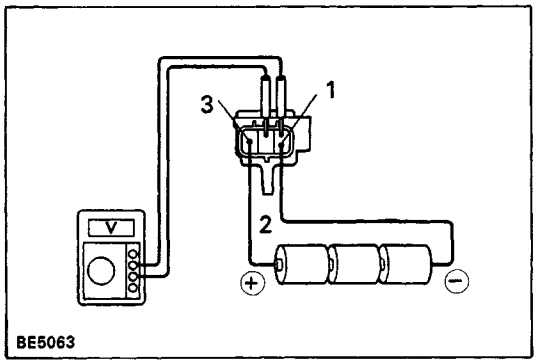

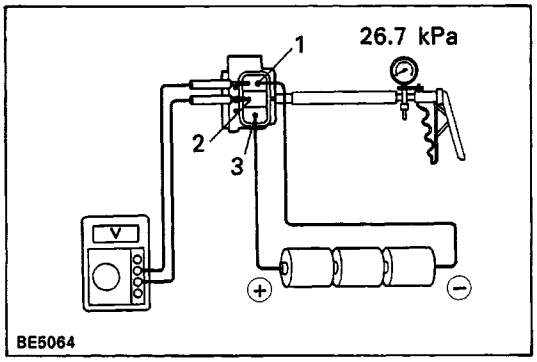

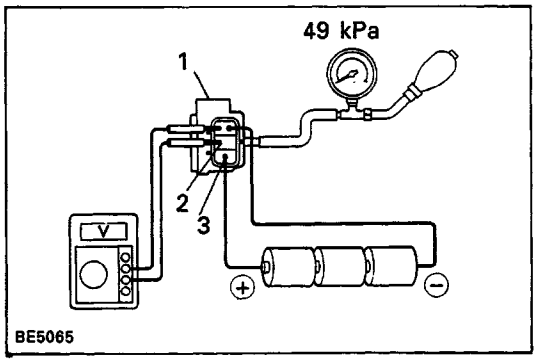

TURBO PRESSURE SENSOR INSPECTION

INSPECT TURBO PRESSURE SENSOR

(a) Connect a series of three 1.5 V dry cell batteries.

(b) Connect the positive (+) lead from the dry cell batteries to terminal 3 and the negative (–) lead to terminal 1.

(c) Connect the positive (+) lead from the voltmeter to ter–minal 2 and the negative (–) lead to terminal 1.

(d) Check that the voltage between terminals 2 and 1.
Voltage: Approx. 2.4 V

(e) Apply 26.7 kPa (200 mmHg, 7.87 in.Hg) of vacuum.
Check that the voltage drops below approximately 2.4 V.

(f) Using SST, apply 49 kPa (0.5 kgf/cm2, 7.2 psi) of pres–sure.
Check that the voltage rises approximately 2.4 V.
SST 09992–00241
If operations are not as specified, replace the sensor.

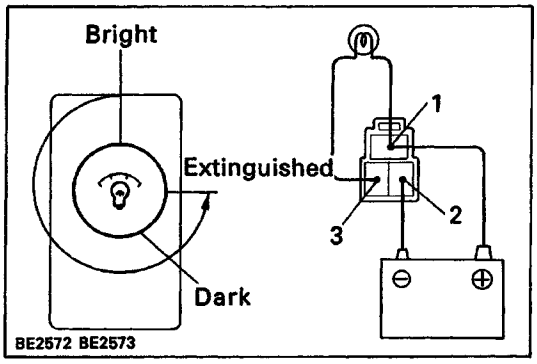

METER ILLUMINATION CONTROL SYSTEM

LIGHT CONTROL RHEOSTAT INSPECTION

INSPECT LIGHT CONTROL RHEOSTAT

(a) Connect terminals 1 and 3 through a 3.4 W test bulb.
(b) Connect the positive (+) lead from the battery to terminal 1 and the negative (–) lead to terminal 2.
(c) Turn the rheostat knob to fully counterclockwise, check that the test bulb goes out.
(d) Gradually turn the rheostat knob to clockwise, check that the test bulb brightness changes from dark to bright.
If operation is not as specified, replace the rheostat.

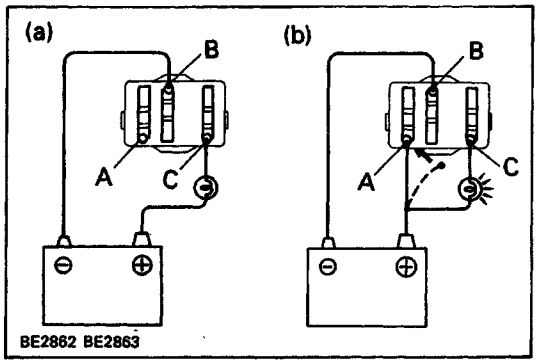

BULB CHECK SYSTEM

BULB CHECK RELAY INSPECTION

INSPECT BULB CHECK RELAY

(a) Connect the positive (+) lead from the battery to terminal C through a 1.4 W test bulb and the negative (–) lead to terminal B, check that the test bulb does not light up.
(b) Connect the positive (+) lead from the battery to terminal A, check that the test bulb lights up.
If operation is not as specified, replace the relay.

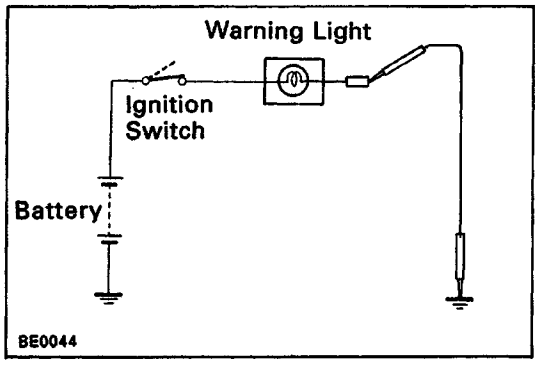

OPEN DOOR WARNING SYSTEM

OPEN DOOR WARNING LIGHT INSPECTION

INSPECT WARNING LIGHT

(a) Disconnect the connector from the door courtesy switch and ground terminal on the wire harness side connector.
(b) Turn the ignition switch ON, check that the warning light lights up.
If the warning does not light up, test the bulb.

DOOR COURTESY SWITCH INSPECTION

See Interior Light System on page BE–49.

CRUISE CONTROL SYSTEM

PARTS LOCATION

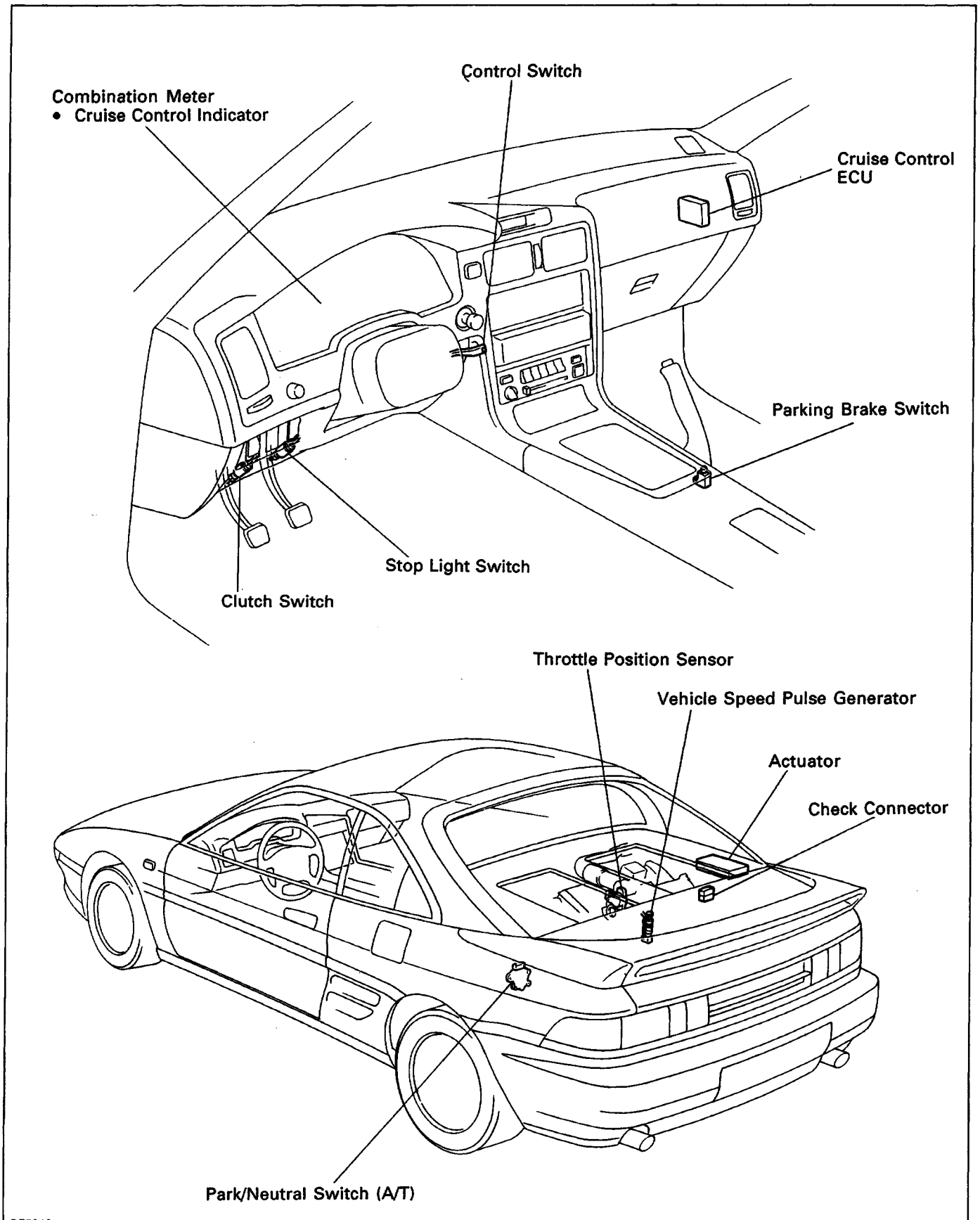

BE5243
BE4947

WIRING DIAGRAM
(USA)

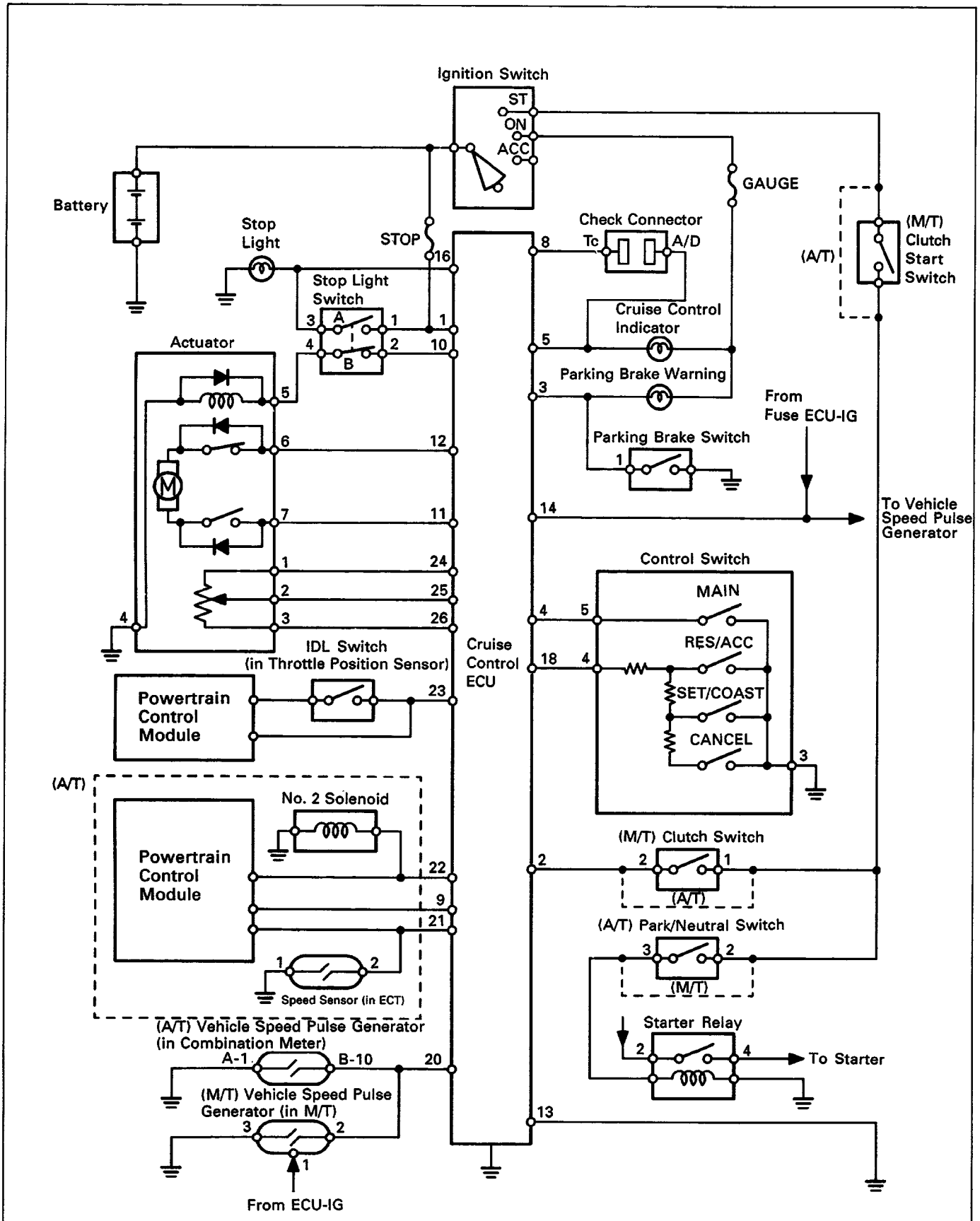

The POWER SOURCE CIRCUIT has been simplified. For full details, see page BE-9.

BE5244

(CANADA)

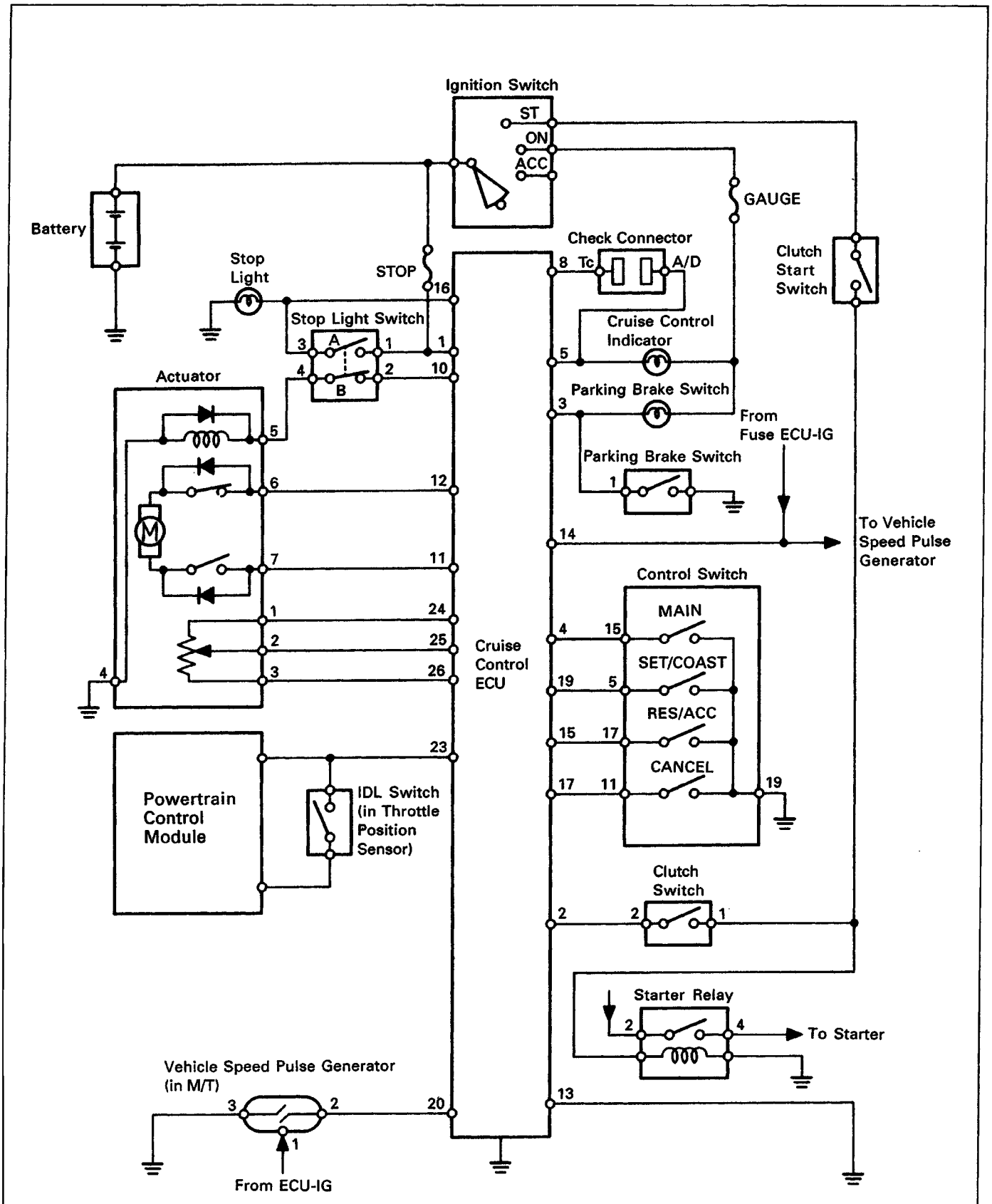

The POWER SOURCE CIRCUIT has been simplified. For full details, see page BE-9.

BE5245

CONNECTOR DIAGRAMS

Cruise Control Switch

(USA)



e-6-1-C

(CANADA)

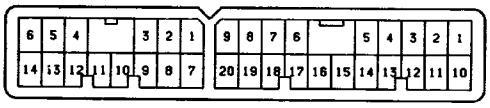

Connector "A" Connector "B"

V-34-2

Stop Light Switch

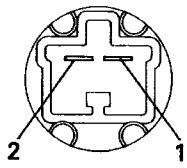

BE5656

Clutch Switch (M/T)



G-2-2

Parking Brake Switch

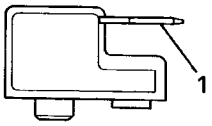

BE1412

Park/Neutral Switch (A/T)

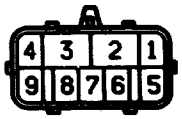

SH-9-2-A

Cruise Control ECU

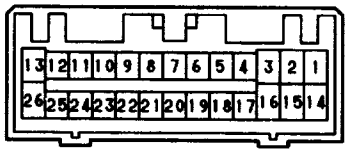

Vd-26-2-B

Actuator



Ie-7-2

Starter Relay

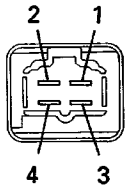

ST0280

Throttle Position Sensor

(3-Pin Type) (4-Pin Type)

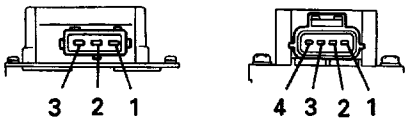

AC2241

Vehicle Speed Pulse Generator

(M/T) (A/T)

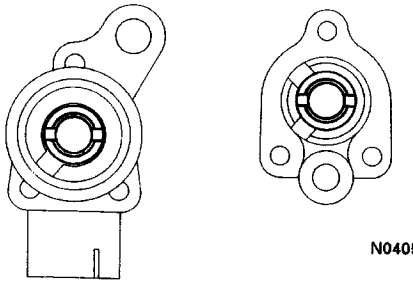

N04051

N04050

SYSTEM DESCRIPTION

- When the ignition switch is turned ON, current flows from the battery to terminal 14 of the cruise control (CC) ECU.
- Terminal 13 of the CC ECU is always grounded.

BASIC OPERATION

HINT: For all explanations below, the ignition switch is in the ON position.

1. CONTROL SWITCH OPERATION

- The CC switch controls MAIN switch, SET/COAST, RESUME/ACCEL and CANCEL functions.

(USA)

(a) MAIN switch

When the main switch is pushed ON, current flows from terminal 4 of the CC ECU – terminal 5 of the control switch – terminal 3 of the switch – ground.
As a result, the CC ECU is on standby and terminal 5 of the CC ECU is grounded. Therefore the CC indicator lights up.

(b) SET/COAST, RESUME/ACCEL and CANCEL switch

The control switch controls the SET, COAST, RESUME, ACCEL and CANCEL functions. When the control switch is turned to each position, current flows from terminal 18 of the CC ECU – terminal 4 of the control switch→ (each resistance) → terminal 3 of the switch→ ground.
In the way, the CC ECU detects each position the control switch is turned to, and starts operation.

HINT: The SET function is detected by the CC ECU when the control switch released from SET/COAST.

(CANADA)

(a) MAIN switch

When the main switch is pushed ON, current flows from terminal 4 of the CC ECU→ terminal 15 of the control switch → terminal 19 of the switch → ground.
As a result, the CC ECU is on standby and terminal 5 of the CC ECU is grounded. Therefore the CC indicator lights up.

b) SET/COAST switch

When the control switch is turned to SET/COAST position, the current flows from terminal 19 of the CC ECU → terminal 5 of the CC switch→ terminal 19 of the CC switch→ ground.

c) RESUME/ACCEL switch

When the control switch is turned to RESIACC position, the current flows from terminal 18 of the CC ECU→ terminal 17 of the CC switch → terminal 19 of the CC switch→ ground.

d) CANCEL switch

When the control switch is turned to CANCEL position, the current flows from terminal 17 of the CC ECU→ terminal 11 of the CC switch → terminal 19 of the CC switch→ ground.

SPEED CONTROL OPERATION

When the vehicle speed is set by the control switch, the ECU sends signal from terminal 10→terminal 2 of the stop light switch → terminal 4 of the switch → terminal 5 of the actuator→ (safety magnetic clutch) – terminal 4 of the actuator → ground.
When the actual vehicle speed drops below the set speed, the CC ECU sends a signal (voltage) from terminal 12 → terminal 6 of actuator→ (motor) → terminal 7 of actuator→ terminal 11 of CC ECU. This causes the motor to rotate the actuator arm in the throttle opening direction, increasing the vehicle speed. Then, when the arm reaches the prescribed angle, the CC ECU detects this at terminal 25 and stops the signal from 12.
When the actual vehicle speed rises above the set speed, the CC ECU sends a signal from terminal 11, turning the motor in the opposite direction so that the vehicle speed is reduced.
The CC ECU sends approx. 5 V from terminal 24 → terminal 1 of the actuator →(position sensor) →terminal 3 of the actuator → terminal 26 of the CC ECU. When the occurs, the position sensor sends the position of the actuator arm as a signal (voltage) from terminal 2 of the actuator to terminal 25 of the CC ECU.

3. MANUAL CANCEL OPERATION

The CC system has the following methods of cancellation:

- **Speed Control Switch (CANCEL)**
  When the control switch is turned to CANCEL position.
- **Parking Brake Switch**
  When the parking brake lever is pulled, the parking brake switch is turned ON and sends a cancellation signal (ground voltage) to terminal 3 of the CC ECU.
- **Park/Neutral Switch (A/T)**
  When the shift lever is set to ”N” or ”P” range, the park/neutral switch is turned ON and sends a cancellation signal (ground voltage) to terminal 2 of the CC ECU.
- **Clutch Switch (M/T)**
  When the clutch pedal is depressed, the clutch switch is turned ON and sends a cancellation signal (ground voltage) to terminal 2 of the CC ECU.
- **Stop Light Switch**
  When the brake pedal is depressed, SW B of the stop light switch is turned OFF, the safety magnetic clutch (in actuator) is released, and SW A of the stop light switch is turned ON and sends a cancellation signal (battery voltage) to terminal 16 of the CC ECU.

  When the CC ECU detects any of the above signals, it stops output of signals to the actuator, and cancels cruise control.

CC: Cruise Control

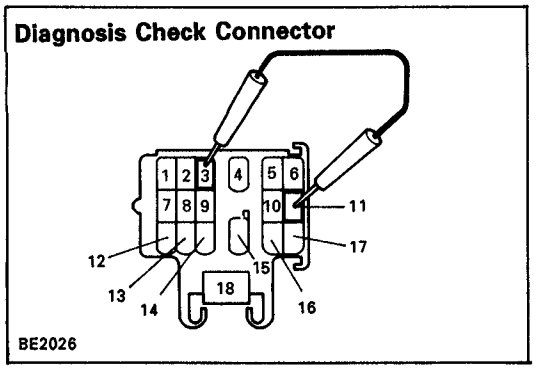

DIAGNOSIS SYSTEM

OUTPUT OF DIAGNOSIS CODE

READ DIAGNOSIS CODE

(a) If while driving with the cruise control on, the system is canceled by a malfunction in either the actuator, speed sensor or speed control switch circuit, the cruise control indicator light "CRUISE" will blink 5 times.

(b) While stopped, connect terminals 3 and 11 of the check connector.

HINT: If the ignition switch is turned oft, the diag–nostic code will be erased from the computer memory.

(e) Read the diagnostic code on the indicator light "CRUISE".

	Indicator code	Diagnosis
		Normal
11		Excessive current flowed to motor or safety magnetic clutch drive circuit.
12	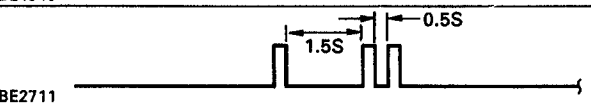	Open circuit in safety magnetic clutch circuit.
13		Position sensor circuit abnormal. Open circuit in motor.
21		Vehicle speed signal not sent for 140 msec. or longer.
22		Vehicle speed pulse generator (in Powertrain Control Module) circuit is abnormal.
23		(A/T) Vehicle speed has decreased by 16 km/h (10 mph) or more from the set speed during cruising.
31		(CANADA) RESUME/ACCEL switch is ON always when MAIN switch is pushed ON.
32		(USA) Short circuit in control switch circuit.
33		(CANADA) SET/COAST switch signal and RES/ACC switch signal turned on simultaneously.
34	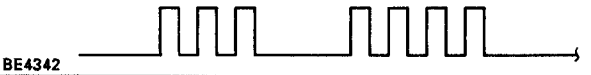	(USA) Control switch does not turn o¿¿ before switching.
41		ECU malfunction.
If the set speed can be maintained when the speed control switch is again set at SET/COAST, there is no malfunction.		

HINT:

- Indication codes appear in order from No. 11.
- If there is no indication code, perform troubleshooting and inspection. (See page BE–124).

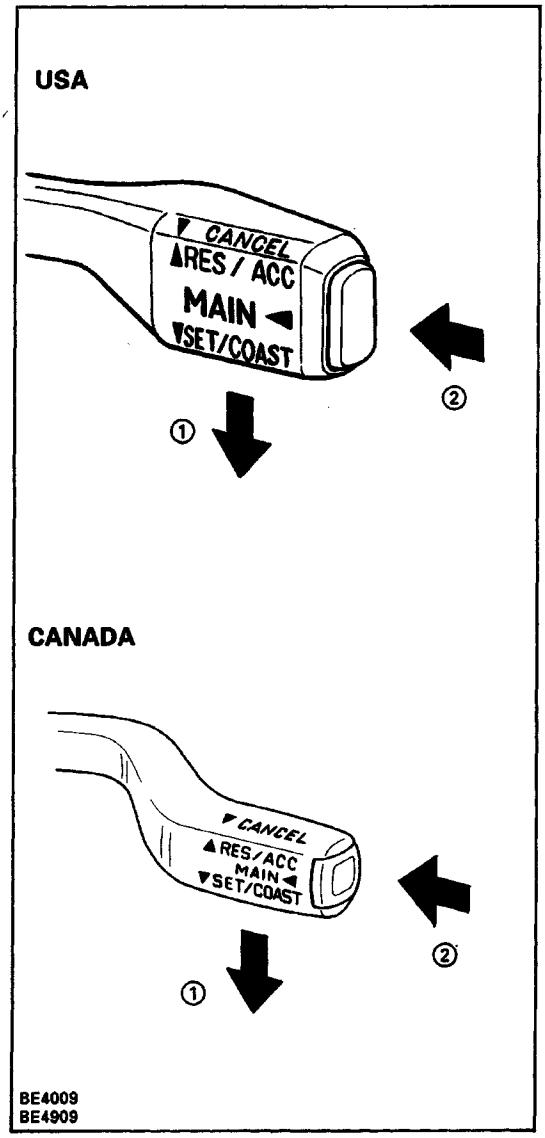

INPUT SIGNAL CHECK

Output Code

1. (a) For check No. 1 – No. 2
   Turn the ignition switch on.
   (b) For check No. 3 – No. 4
   Jack up the vehicle.
   Start the engine.
2. Turn the control switch to SET/COAST position and hold it down (1).
3. Push the main switch on (2).
4. Check that the CRUISE MAIN indicator light blinks twice repeatedly.
5. Turn the SET/COAST switch off.
6. Operate each switch as listed in the table below.
7. Read the blinking pattern of the CRUISE MAIN indicator light.
8. After performing the check, turn the main switch off.

HINT: When two or more signals are input to the ECU, only the lowest–numbered code is displayed.

No.	Operation Method	CRUISE MAIN Indicator Light Blinking Pattern	Diagnosis
1	Turn SET/COAST switch ON.	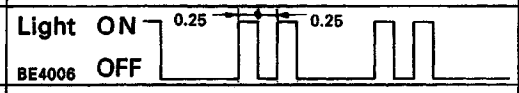	SET/COAST switch circuit is normal.
2	Turn RES/CC switch ON.		RES/ACC switch circuit is normal.
3	Turn CANCEL switch ON.	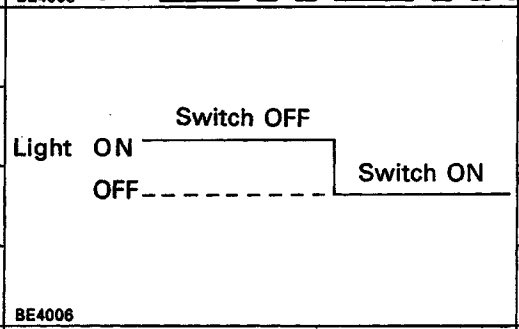	CANCEL switch circuit is normal.
	Turn stop fight switch ON. (Depress brake pedal)		Stop fight switch circuit is normal.
	Turn parking brake switch ON. (Release parking brake)		Parking brake switch circuit is normal.
	Turn park/neutral switch ON. (Shift to N or P range)		Park/neutral switch circuit is normal.
4	Drive at 40 km/h (25 mph) or higher.		Vehicle speed pulse generator is normal.
	Drive at 40 km/h (25 mph) or below.		

TROUBLESHOOTING

You will find the source of the trouble more easily be properly using the table shown below. In this table, the numbers indicate the order of priority of the causes of trouble. Check each part in the order shown.

Chart No.					H	*1	*2	L	N, 0	M	*3	P	Q		
Inspection Item / Diagnosis Code / Problem	Type B	Type A		CC ECU	Actuator	Main Switch (in Control Switch)	Control Switch	Stop Light Switch	Clutch Switch or Park/Neutral Switch	Parking Brake Switch	Vehicle Speed Pulse Generator or Speedometer Cable	ECT Solenoid No. 2 Circuit	Throttle Position Sensor (IDL)	Speed Control Cable Function	Wire Harness
• "CRUISE" Indicator light blinks 5 times. • Cruise control system does not set. • Cruise control system does not operate	11			3	2										1
	12			4	2			3							1
	13			3	2										1
	21			3							2				1
	22			2							1				
	23			4	3						2			1	
	31			3			2								1
	32			2			1								
	33			3			2								1
	34			2			1								
	41			1											
	Normal	4	OK	9	8	2	3	4	5	6				7	1
			NG	2							7				
Set speed deviates on high or low side				4	3						1			2	
Large speed drop when the speed control switch turned to SET.				4	3								2	1	
Vehicle speed fluctuates when speed control switch turned to SET.				4	3						1			2	
Acceleration response is sluggish when speed control switch turned to "ACCEL" or "RESUME'				4	3						2			1	
During autodrive operation, shift operation occurs frequently without control				2								1			
Set speed does not cancel when brake pedal depressed.	3	OK		1											
		NG		2				1							
Set speed does not cancel when parking brake lever pulled.	3	OK		1											
		NG		2						1					
Set speed does not cancel when clutch pedal depressed.	3	OK		1											
		NG		2					1						
Set speed does not cancel when speed control switch turned to CANCEL.	3	OK		1											
		NG		2			1								
Vehicle speed does not decrease when speed control switch turned to COAST.	1	OK		4	1						3			2	
		NG		2			1								
Vehicle speed does not accelerate when speed control switch turned to ACCEL.	2	OK		4	1						3			2	
		NG		2			1								
Vehicle speed does not return to memorized speed when control switch turned on RESUME	2	OK		4	1						3			2	
		NG		2			1								
Speed can be set below about 40 km/h (25 mph.)	4	OK		1											
		NG		2							1				
Cruise control will not disengage even at about 40 km/h (25 mph).	4	OK		1											
		NG		3							1			2	

*1 USA : C
CANADA : D
*2 USA : C
CANADA : E, F, G
*3 M/T : I
A/T : J, K

A POWER SOURCE CIRCUIT

HINT: While carrying out the following inspection, make certain that the connectors and terminals are properly connected.

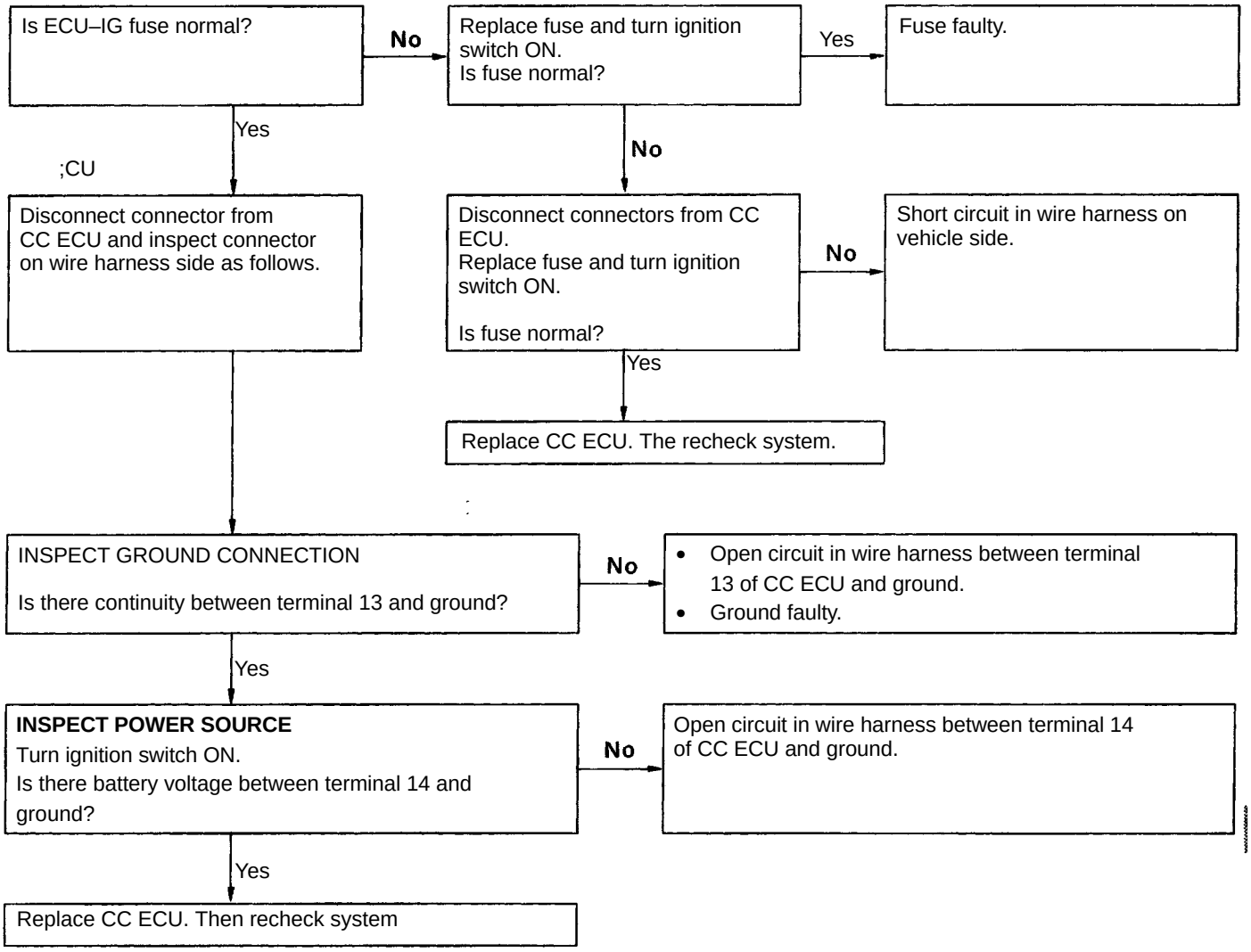

CC: Cruise Control

B CRUISE CONTROL INDICATOR CIRCUIT

HINT: While carrying out the following inspection, make certain that the connectors and terminals are properly connected.

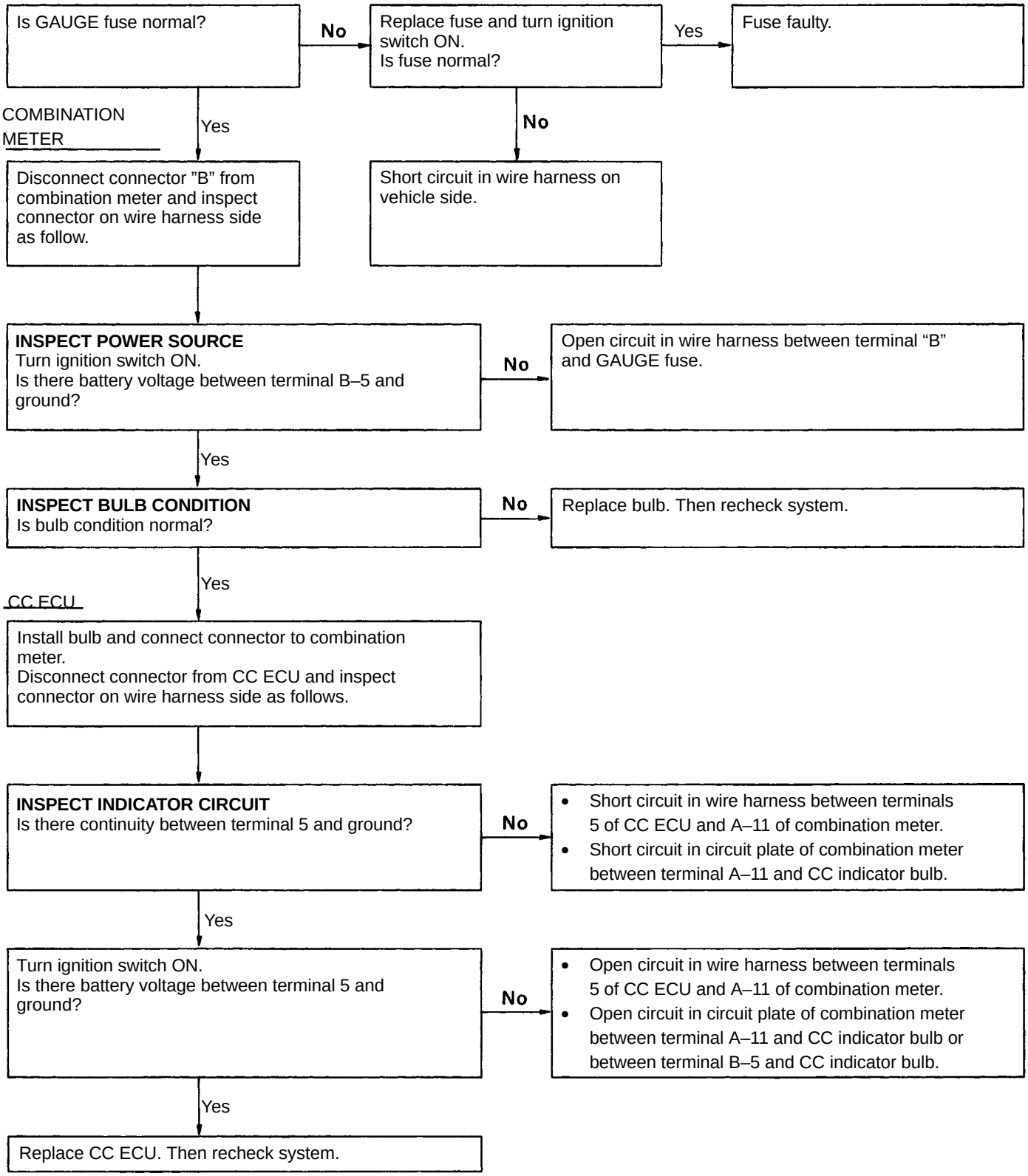

CC: Cruise Control

C CONTROL SWITCH CIRCUIT (USA)

HINT: While carrying out the following inspection, make certain that the connectors and terminals are properly connected.

CONTROL SWITCH

Disconnect connector from control switch and inspect connector on wire harness side as follows.

INSPECT GROUND CONNECTION
Is there continuity between terminal 3 and ground?

No →
- Open circuit in wire harness between terminal 3 of control switch and ground.
- Ground faulty.

Yes

INSPECT CONTROL SWITCH (See page BE–137)
Is control switch operation normal?

No → Replace control switch. Then recheck system.

Yes

CC ECU

Connect connector to control switch.
Disconnect connectors from CC ECU and inspect connectors on wire harness side as follows.

INSPECT MAIN SWITCH CIRCUIT
Is there continuity between terminal 4 and ground with main switch OFF?

Yes → Short circuit in wire harness between terminals 4 of CC ECU and 5 of control switch.

No

!s there continuity between terminal 4 and ground with main switch ON?

No → Open circuit in wire harness between terminals 4 of CC ECU and 5 of control switch.

Yes

INSPECT CONTROL SWITCH CIRCUIT
Is there continuity between terminal 18 and ground with control switch OFF?

Yes → Short circuit in wire harness between terminals 18 of CC ECU and 4 of control switch.

No

Is there resistance as shown in table below between terminal 18 and ground when control switch is turned to each position?

No → Open circuit in wire harness between terminals 18 of CC ECU and 4 of control switch.

Position	Resistance (S
RESIACC SET/COAST CANCEL	Approx. fib Approx. 198 Approx. 418

Yes

Replace CC ECU. Then recheck system.

CC: Cruise Control

D MAIN SWITCH CIRCUIT (CANADA)

HINT: While carrying out the following inspection, make certain that the connectors and terminals are properly connected,

CONTROL SWITCH

Disconnect connector from control switch and inspect connector on wire harness side as follows.

INSPECT GROUND CONNECTION
Is there continuity between terminal 19 and ground?

No →
- Open circuit in wire harness between terminal 19 of control switch and ground.
- Ground faulty.

Yes

INSPECT CONTROL SWITCH (See page BE–137)
Is control switch operation normal?

No → Replace control switch. Then recheck system.

Yes

CC ECU

Connect connector to control switch.
Disconnect connector from CC ECU and inspect connector on wire harness side as follows.

INSPECT MAIN SWITCH CIRCUIT

Is there continuity between terminal 4 and ground with MAIN switch ON?

No → Open circuit in wire harness between terminal 4 of CC ECU and terminal 15 of control switch.

Yes

Is there continuity between terminal 4 and ground with MAIN switch OFF?

Yes → Short circuit in wire harness between terminal 4 of CC ECU and terminal 15 of control switch.

No

Replace CC ECU.
Then recheck system.

CC: Cruise Control

E SET/COAST SWITCH CIRCUIT (CANADA)

HINT: While carrying out the following inspection, make certain that the connectors and terminals are properly connected.

CONTROL SWITCH

Disconnect connector from control switch and inspect connector on wire harness side as follows.

INSPECT GROUND CONNECTION
Is there continuity between terminal 19 and ground?

No →
- Open circuit in wire harness between terminal 19 of control switch and ground.
- Ground faulty.

Yes

INSPECT CONTROL SWITCH
(See page BE–137**)**
Is control switch operation normal?

No → Replace control switch. Then recheck system.

Yes

CC ECU

Connect connector to control switch.
Disconnect connector from CC ECU and inspect connector on wire harness side as follows.

INSPECT SET/COAST SWITCH CIRCUIT .
Is there continuity between terminal 19 and ground with control switch turned to SET/COAST position?

No → Open circuit in wire harness between terminal 19 of CC ECU and terminal 5 of control switch.

Yes

Is there continuity between terminal 19 and ground when control switch released?

Yes → Short circuit in wire harness–between terminal 19 of CC ECU and terminal 5 of control switch.

No

Replace CC ECU.
Then recheck system.

CC: Cruise Control

F RES/ACC SWITCH CIRCUIT (CANADA)

HINT: While carrying out the following inspection, make certain that the connectors and terminals are properly connected.

CONTROL SWITCH

Disconnect connector from control switch and inspect connector on wire harness side as follows.

INSPECT GROUND CONNECTION
Is there continuity between terminal 19 and ground?

No → • Open circuit in wire harness between terminal 19 of control switch and ground.
• Ground faulty.

Yes

INSPECT CONTROL SWITCH
(See page BE–137**)**
Is control switch operation normal?

No → Replace control switch. Then recheck system.

Yes

CC ECU

Connect connector to control switch.
Disconnect connector from CC ECU and inspect connector on wire harness side as follows.

INSPECT RESUME/ACCEL CIRCUIT
Is there continuity between terminal 18 and ground with control switch turned to RES/ACC position?

No → Open circuit in wire harness between terminal 18 of CC ECU and terminal 17 of control switch.

Yes

Is there continuity between terminal 18 and ground with control switch released?

Yes → Short circuit in wire harness between terminal 18 of CC ECU and terminal 17 of control switch.

No

Replace CC ECU.
Then recheck system.

CC: Cruise Control

G CANCEL SWITCH CIRCUIT (CANADA)

HINT: While carrying out the following inspection, make certain that the connectors and terminals are properly connected.

CONTROL SWITCH

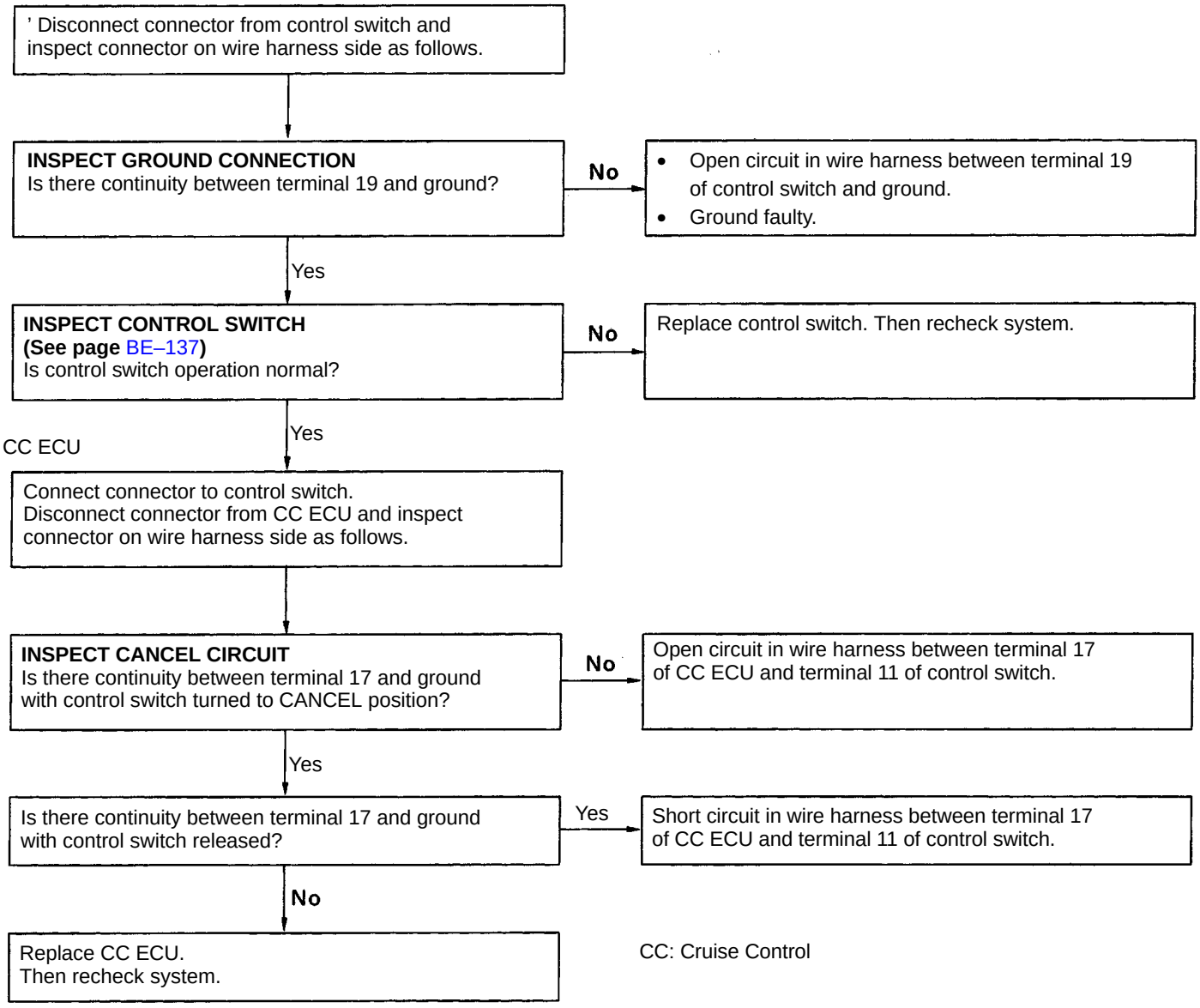

H ACTUATOR CIRCUIT

HINT: While carrying out the following inspection, make certain that the connectors and terminals are properly connected.

ACTUATOR

Disconnect connector from actuator and inspect connector on wire harness side as follows.

INSPECT GROUND CONNECTION
Is there continuity between terminal 4 and ground?

No →
- Open circuit in wire harness between terminal 4 of actuator and ground.
- Ground faulty.

Yes

INSPECT ACTUATOR (See page BE–139)
Is actuator operation normal?

No → Replace actuator. Then recheck system.

Yes

STOP LIGHT SWITCH

INSPECT STOP LIGHT SWITCH INSTALLATION
Is stop light switch installed properly?

No → Reinstall stop light switch properly. Then recheck system.

Yes

Connect connector to actuator.
Disconnect connector from stop light switch and inspect connector on wire harness side as follows.

INSPECT SAFETY MAGNETIC CLUTCH CIRCUIT
Is there approx. 38.5 Ω between terminal 4 and ground?

No → Open or short circuit in wire harness between terminals 4 of stop light and 5 of actuator.

Yes

INSPECT STOP LIGHT SWITCH (See page BE–137)
Is stop light switch operation normal?

No → Replace stop light switch. Then recheck system.

Yes

CONTINUED ON NEXT PAGE

CC: Cruise Control

CONTINUED FROM PREVIOUS PAGE

CC ECU

Connect connector to stop light switch.
Disconnect connectors from CC ECU and inspect connector on wire harness side as follows.

INSPECT SAFETY MAGNETIC CLUTCH CIRCUIT
Is there approx. 38.5Ω between terminal 10 and ground?

No → Open or short circuit in wire harness between terminals 10 of CC ECU and 4 of actuator.

Yes

INSPECT MOTOR CIRCUIT
Is there continuity between terminal 12 and ground?

Yes → Short circuit in wire harness between terminals 12 of CC ECU and 6 of actuator.

No

Is there continuity between terminal 11 and ground?

Yes → Short circuit in wire harness between terminals 11 of CC ECU and 7 of actuator.

No

Is there continuity between terminals 11 and 12 with actuator arm in a position except max. open or max. close?

No → Open circuit in wire harness between terminals 12 of CC ECU and 6 of actuator or between terminals 11 of CC ECU and 7 of actuator.

Yes

INSPECT POSITION CIRCUIT
Is there continuity between terminal 24 and ground?

Yes → Short circuit in wire harness between terminals 24 of CC ECU and 1 of actuator.

No

Is there approx. 2 kΩ between terminals 24 and 26

No →
- Open circuit in wire harness between terminals 26 of CC ECU and 3 of actuator.
- Open circuit in wire harness between terminals 24 of CC ECU and 1 of actuator.

Yes

Does resistance change even between terminals 25 and 26?

No → Open or short circuit in wire harness between terminals 25 of CC ECU and 2 of actuator.

Yes

Replace CC ECU. Then recheck system.

CC: Cruise Control

VEHICLE SPEED PULSE GENERATOR CIRCUIT (with M/T)

HINT: While carrying out the following inspection, make certain that the connectors and terminals are properly connected.

VEHICLE SPEED PULSE GENERATOR

Disconnect connector from vehicle speed pulse generator and inspect connector on wire harness side as follows.

INSPECT GROUND CONNECTION
Is there continuity between terminal 3 and ground?

No →
- Open circuit in wire harness between terminal 3 of vehicle speed pulse generator and ground.
- Ground faulty.

Yes ↓

INSPECT VEHICLE SPEED PULSE GENERATOR (See page BE–138)
Is vehicle speed pulse generator operation normal?

No → Replace vehicle speed pulse generator. Then recheck system.

Yes ↓

CC ECU

Connect connector to vehicle speed pulse generator
Disconnect connector from CC ECU and inspect connector on wire harness side as follows.

INSPECT VEHICLE SPEED PULSE GENERATOR CIRCUIT
Is there continuity repeatedly between terminal 20 and ground?

No →
- Open or short circuit in wire harness between terminals 20 of CC ECU and 2 of vehicle speed pulse generator

Yes ↓

Replace CC ECU. Then recheck system.

CC: Cruise Control

J VEHICLE SPEED PULSE GENERATOR CIRCUIT (with A/T: COMBINATION METER)

HINT: While carrying out the following inspection, make certain that the connectors and terminals are properly connected.

COMBINATION METER

Disconnect connector "A" from combination meter and inspect connector on wire harness side as follows.

INSPECT GROUND CONNECTION
Is there continuity between terminal A–1 and ground?

No

- Open circuit in wire harness between terminal A–1 of combination meter and ground.
- Ground faulty.

Yes

INSPECT CONTROL SWITCH (See page BE–137)
Is speed sensor operation normal?

No

Replace speedometer. Then recheck system.

Yes

CC ECU

Connect connector "A" to combination meter.
Disconnect connector from CC ECU and inspect connector on wire harness side as follows.

INSPECT VEHICLE SPEED PULSE GENERATOR CIRCUIT
Is there continuity repeatedly between terminal 20 and ground?

No

- Open or short circuit in wire harness between terminals 20 of CC ECU and B–10 of combination meter.
- Open or short circuit in circuit plate of combination meter between terminal B–10 and vehicle speed pulse generator.
- Open circuit in circuit plate of combination meter between terminal A–1 and vehicle speed pulse generator.

Yes

Replace CC ECU. Then recheck system.

CC: Cruise Control

K VEHICLE SPEED PULSE GENERATOR CIRCUIT (with AM ECT)

HINT: While carrying out the following inspection, make certain that the connectors and terminals are properly connected,

VEHICLE SPEED PULSE GENERATOR

Disconnect connector from vehicle speed pulse generator and inspect connector on wire harness side as follows.

INSPECT GROUND CONNECTION
Is there continuity between terminal 1 and ground?

No →
- Open circuit in wire harness between terminal 1 of vehicle speed pulse generator and ground.
- Ground faulty.

Yes ↓

INSPECT VEHICLE SPEED PULSE GENERATOR
(See page BE–138**)**
Is there continuity between terminal 1 and ground?

No → Replace vehicle speed pulse generator. Then recheck system.

Yes ↓

CC ECU

Connect connector to vehicle speed pulse generator
Disconnect connector from CC ECU and inspect connector on wire harness side as follows.

INSPECT VEHICLE SPEED PULSE GENERATOR CIRCUIT
Is there continuity repeatedly between terminal 21 and ground?

No →
- Open or short circuit in wire harness between terminals 21 of CC ECU and of vehicle speed pulse generator

Yes ↓

Replace CC ECU. Then recheck system.

CC: Cruise Control

L STOP LIGHT SWITCH CIRCUIT

HINT: While carrying out the following inspection, make certain that the connectors and terminals are properly connected.

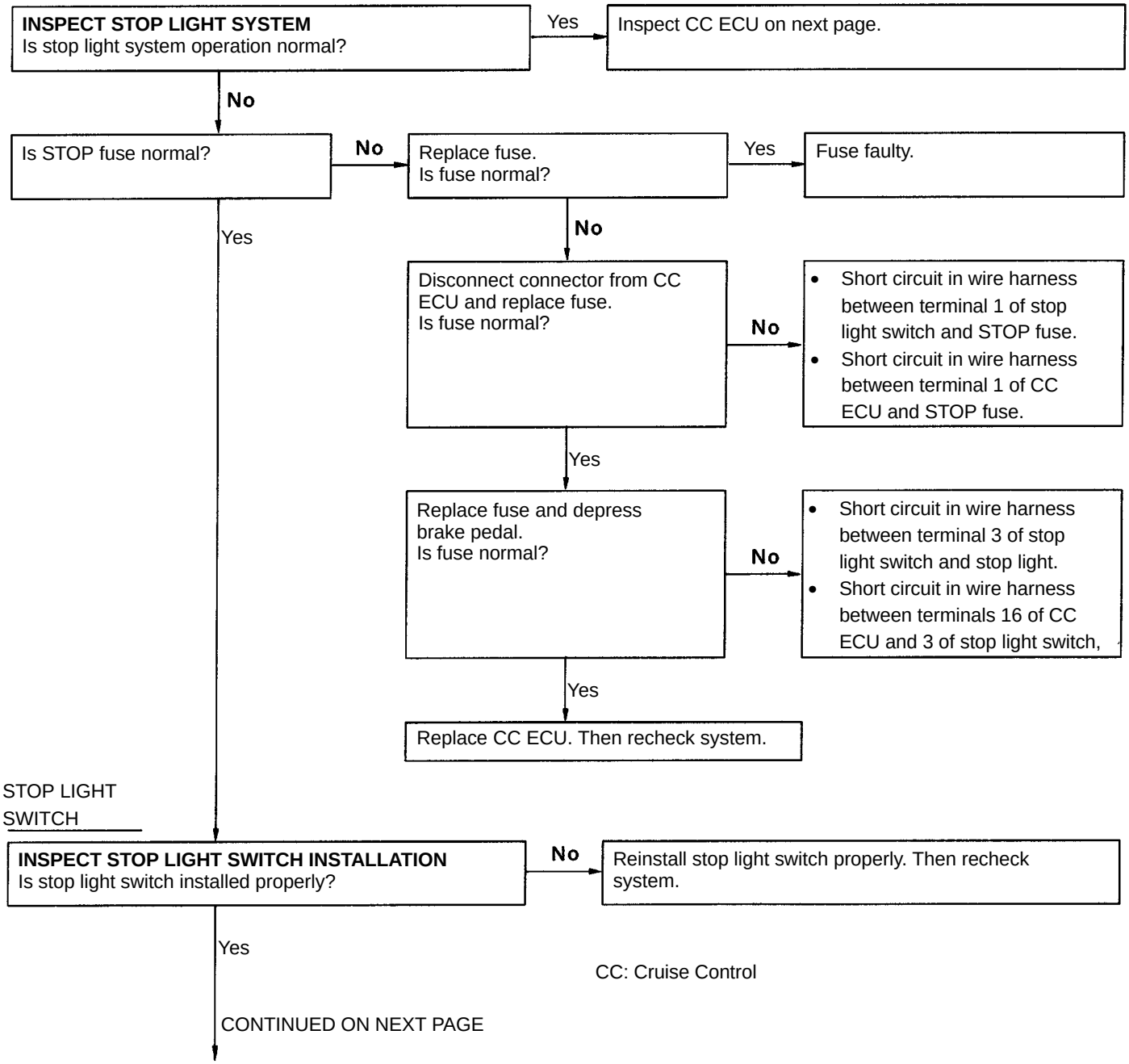

CONTINUED FROM PREVIOUS PAGE

STOP LIGHT SWITCH

Disconnect connector from stop light switch and inspect connector– on wire harness side as follows.

INSPECT POWER SOURCE
Is there battery voltage between terminal 1 and ground?

No → Open circuit in wire harness between terminal 1 of stop light switch and STOP fuse.

Yes

INSPECT STOP LIGHT CIRCUIT
Connect terminals 1 and 3.
Do stop light lights up?

No →
- Open circuit in wire harness between terminal 3 of stop light switch and ground.
- Ground faulty.

Yes

INSPECT STOP LIGHT SWITCH
(See page BE–137**)**
Is stop light switch operation normal?

No → Replace stop light switch. Then recheck system.

Yes

CC ECU

Connect connector to stop light switch.
Disconnect connector from CC ECU and inspect connector on wire harness side as follows.

← If stop light system operation is normal, start inspection from this step.

INSPECT STOP LIGHT SWITCH CIRCUIT
Is there battery voltage between terminal 1 and ground?

No → Open circuit in wire harness between terminal 1 of CC ECU and STOP fuse.

Yes

Is there battery voltage between terminal 16 and ground when brake pedal depressed?

No → Open circuit in wire harness between terminals 16 of CC ECU and 3 of stop fight switch.

Yes

Replace CC ECU. Then recheck system.

CC: Cruise Control

M PARKING BRAKE SWITCH CIRCUIT

HINT: While carrying out the following inspection, make certain that the connectors and terminals are properly connected.

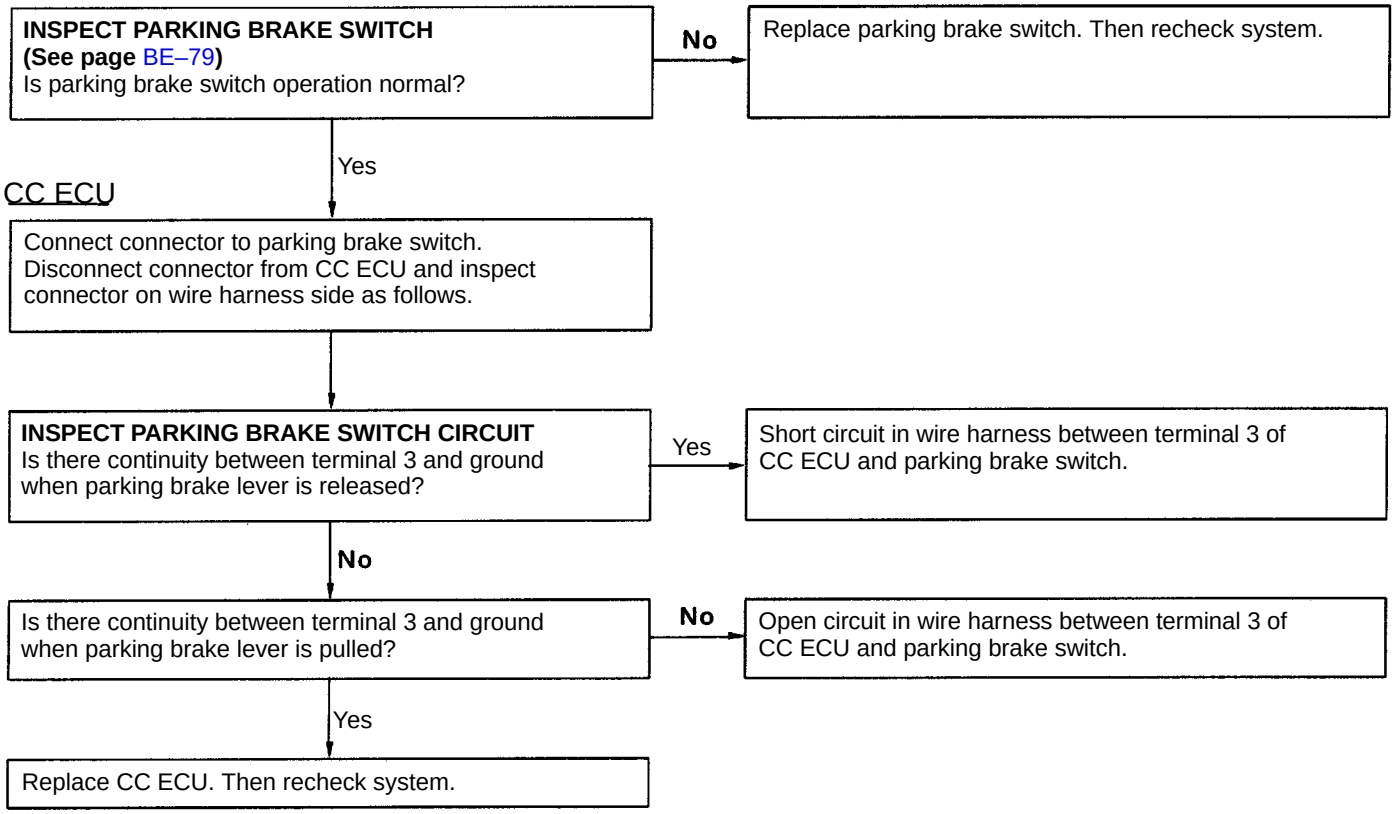

CC: Cruise Control

N CLUTCH SWITCH CIRCUIT (with M/T)

HINT: While carrying out the following inspection, make certain that the connectors and terminals are properly connected.

CLUTCH SWITCH

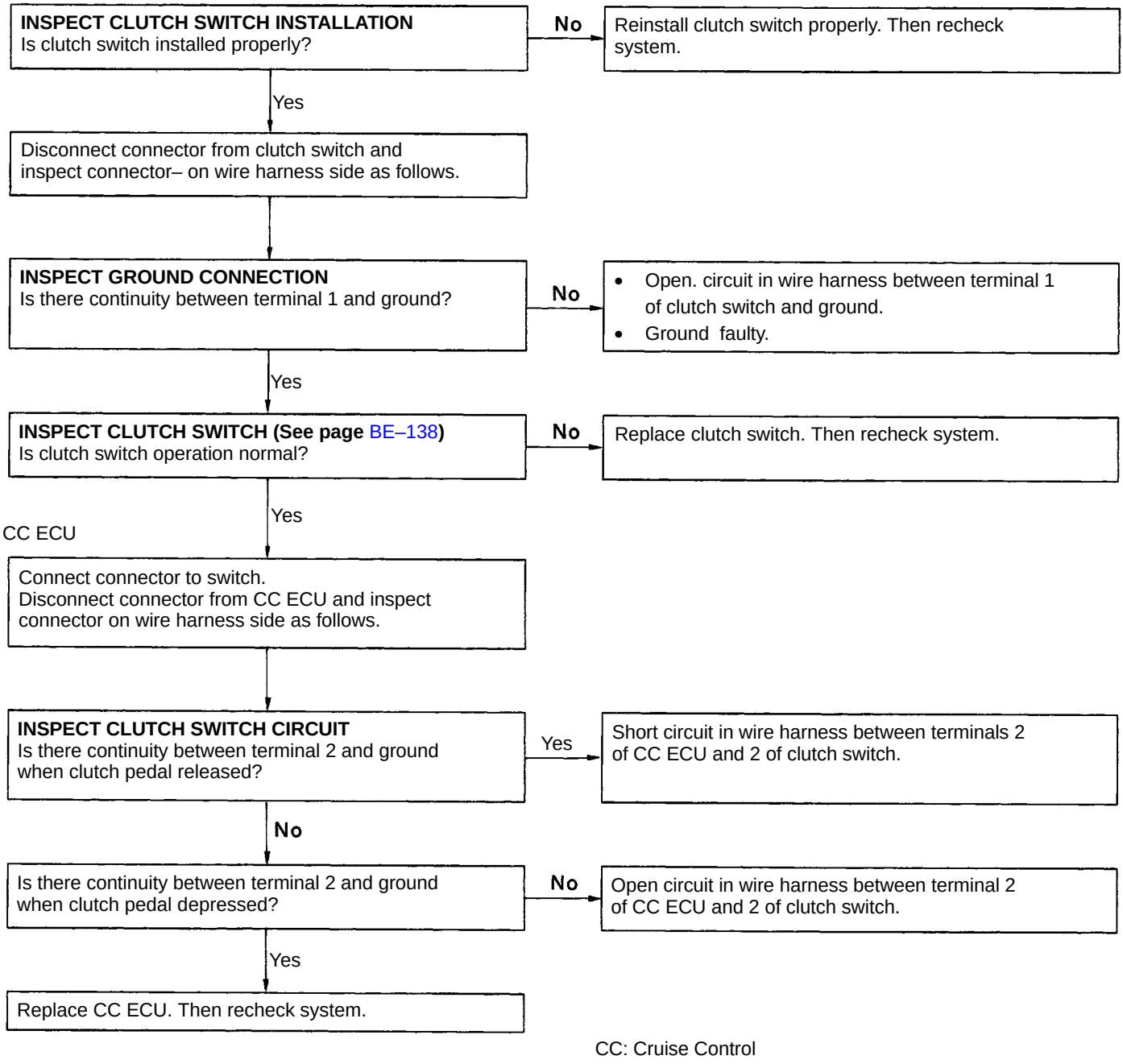

CC: Cruise Control

O PARK/NEUTRAL SWITCH CIRCUIT (with A/T)

HINT: While carrying out the following inspection, make certain that the connectors and terminals are properly connected.

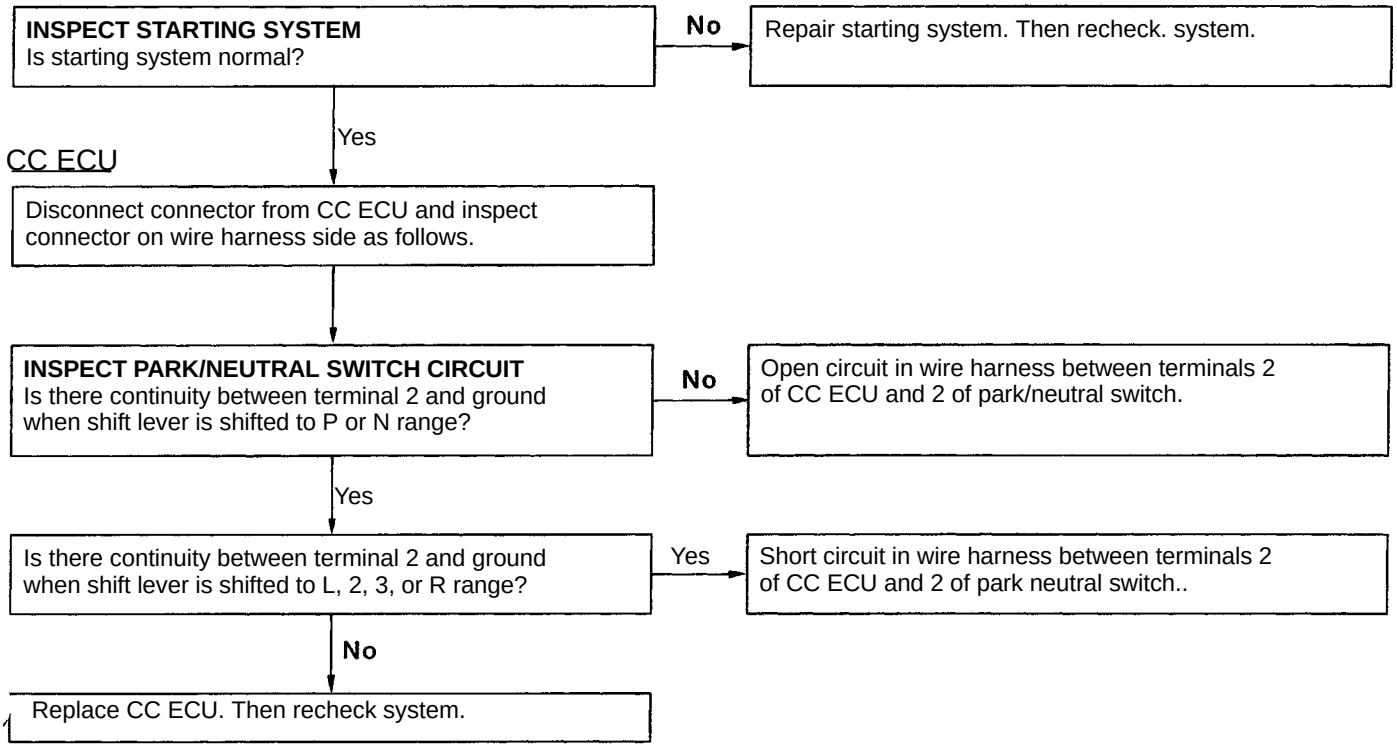

CC: Cruise Control

P ECT SOLENOID No. 2 CIRCUIT (with A/T)

HINT: While carrying out the following inspection, make certain that the connectors and terminals are properly connected.

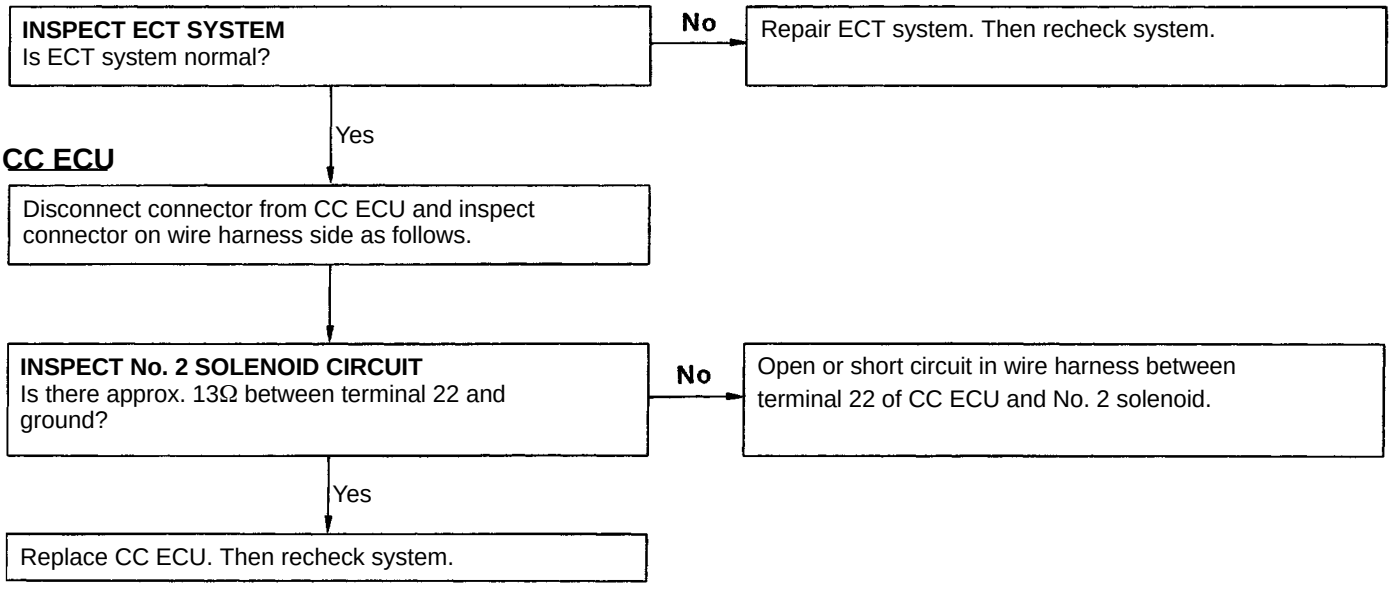

CC: Cruise Control

Q IDL SIGNAL CIRCUIT

HINT:. While carrying out the following inspection, make certain that the connectors and terminals are properly connected.

THROTTLE POSITION SENSOR

INSPECT THROTTLE POSITION SENSOR ADJUSTMENT
Is throttle position sensor adjustment normal?

No → Adjust position sensor position. Then recheck system.

Yes ↓

INSPECT THROTTLE POSITION SENSOR
Is throttle position sensor operation normal?

No → Replace throttle position. Then recheck system.

Yes ↓

CC ECU

Connect connector to throttle position sensor.
Disconnect connector from CC ECU and inspect connector on wire harness side as follows.

↓

INSPECT IDL SIGNAL CIRCUIT
Is there continuity between terminal 23 and ground when acceleration pedal is released?

No → Open circuit in wire harness between terminals 23 of CC ECU and 2 of throttle position sensor.

Yes ↓

Is there continuity between terminal 23 and ground when acceleration pedal is depressed?

Yes → Short circuit in wire harness between terminals 23 of CC ECU and 2 of throttle position sensor.

No ↓

Replace CC ECU. Then recheck system.

CC: Cruise Control

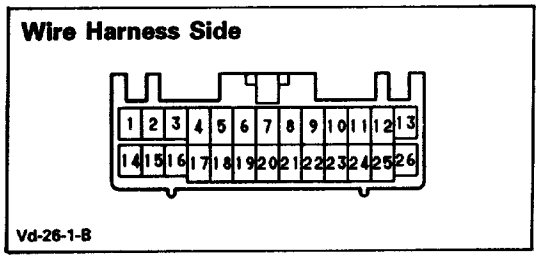

CRUISE CONTROL ECU

CRUISE CONTROL ECU INSPECTION

ECU CIRCUIT

Disconnect connector and inspect connector on wire harness side as shown in the chart.

(USA)

Check for	Measured item	Tester connection	Condition		Specified Value
Continuity	Clutch Switch (M/T)	2 – ground	Clutch pedal position	released	No continuity
				depressed	Continuity
	Park/Neutral switch (Alt)	2 – ground	Shift lever position	Nor P	Continuity
				L,2,D or R	N o continuity
	Parking brake switch	3 – ground	Parking brake lever position	released	No continuity
				pulled	Continuity
	Control switch	4 – ground	Main switch position	pushed	Continuity
				released	No continuity
	Actuator (motor)	11–12	Actuator arm position: max. OPEN		**(12 → 11) Continuity**
					(11 → 12) No continuity
			Actuator arm position: max. CLOSE		**(11 → 12) Continuity**
					(12 → 11) No continuity
			Actuator arm position: any position except above position		**(11 → 12) Continuity**
	Ground connection	13 – ground	Constant		Continuity
Resistance	Actuator (Safety magnetic clutch)	10 – ground	Brake pedal position	released	Approx. 38.5 92
				depressed	No continuity
	Control switch	18 – ground	Control switch position	OFF	No continuity
				RES/ACC	Approx. 68Ω
				SET/COAST	Approx. 198Ω
				CANCEL	Approx. 418 92
	ECT No. 2 solenoid valve (A/T)	22 – ground	Constant		Approx. 13Ω
	Actuator (position sensor)	24–26	Constant		Approx. 2 kΩ
		25–26	Actuator arm turned		Resistance change even
Voltage	STOP fuse	1 – ground	Constant		Battery voltage
	Power source	14 – ground	Ignition switch position	LOCK or ACC	No voltage
				ON	Battery voltage
	Stop light	16 – ground	Brake pedal position	released	No voltage
				depressed	Battery voltage
	Vehicle speed pulse generator	20 – ground	With ignition switch ON, speedometer shaft or speed sensor shaft turned.		Voltage changes repeatedly

(CANADA)

Check for	Measured item	Tester connection	Condition		Specified Value
Continuity	Clutch switch	2 – ground	Clutch pedal position	released	No continuity
				depressed	Continuity
	Parking brake switch	3 – ground	Parking brake lever position	released	No continuity
				pulled	Continuity
	MAIN switch”	4 – ground	Main switch position	pushed	Continuity
				released	No continuity
	Actuator (motor)	11–12	Actuator arm position: max. OPEN		(12 → 11) Continuity
					(11 → 12) No continuity
			Actuator arm position: max. CLOSE		(11 → 12) Continuity
					(12 → 11) No continuity
			Actuator arm position: any position except above position		(11 ↔ 12) Continuity
	Ground connection	13 – ground	Constant		Continuity
	CANCEL switch*1	17 – ground	Cruise control switch position	turned to ”CANCEL”	Continuity
				released	No continuity
	RES/ACC switch*1	18 – ground		turned to ”RES/ACC”	Continuity
				released	No continuity
	SET/COAST switch *1	19 – ground		turned to ”SET/COAST”	Continuity
				released	No continuity
Resistance	Actuator (Safety magnetic clutch)	10 – ground	Brake pedal position	released	Approx. 38.5Ω
				depressed	No continuity
	Actuator (position sensor)	24–26	Constant		Approx. 2 Ω
		25–26	Actuator arm turned		Resistance change even
Voltage	STOP fuse	1 – ground	Constant		Battery voltage
	Power– source	14 – ground	Ignition switch position	LOCK or ACC	No voltage
				ON	Battery voltage
	Stop light	16 – ground	Brake pedal position	released	No voltage
				depressed	Battery voltage
	Vehicle speed pulse generator	20 – ground	With ignition switch ON, speedometer shaft or vehicle speed pulse generator shaft turned.		Voltage changes repeatedly

*’ There is on cruise control switch.

USA

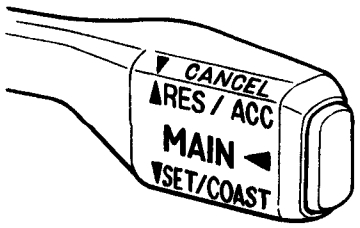

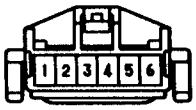

BE4009
e-6-1-C

CRUISE CONTROL SWITCH

CRUISE CONTROL SWITCH INSPECTION

CONTINUITY: USA Models

(a) Check continuity between terminals 3 and 5.

Main switch position	Condition
OFF	No continuity
ON	Continuity

(b) Measure resistance between terminals 3 and 4.

Control switch position	Resistance (Ω)
OFF	∞ (No continuity)
RES/ACC	Approx. 68
SET/COAST	Approx. 198
CANCEL	Appox. 418

If resistance value is not as specified, replace the control switch.

CANADA

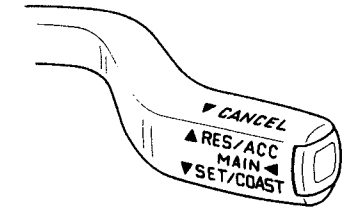

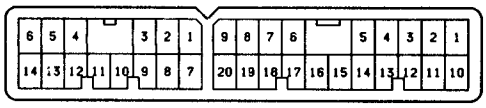

Connector "A" Connector "B"

BE4909
V-34-2

CONTINUITY: CANADA Models

Terminal / Switch Position	B–5	B–11	B–15	B–17	6–19
OFF					
RES/ACC				○	○
MAIN			○	○	○
SET/COAST	○				○
CANCEL		○			○

If continuity is not as specified, replace the switch.

PARKING BRAKE SWITCH

PARKING BRAKE SWITCH INSPECTION

See Brake Warning System on page BE–79.

STOP LIGHT SWITCH

STOP LIGHT SWITCH INSPECTION

CONTINUITY

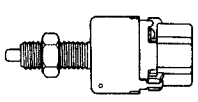

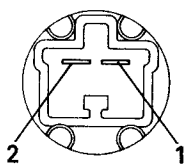

BE1444 BE5656

Terminal / Switch position	1	2
Switch pin free (Brake pedal depressed)	○	○
Switch pin pushed i n (Brake pedal released)		

If continuity is not as specified, replace the stop light switch.

CLUTCH SWITCH

CLUTCH SWITCH INSPECTION

CONTINUITY: M/T Models

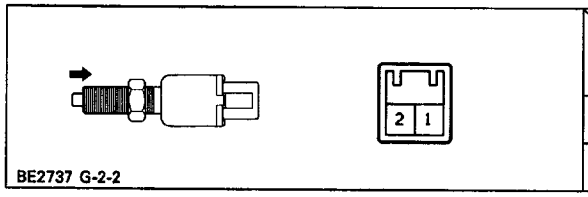

Terminal / Condition	1	2
Switch pin free (Clutch pedal depressed)	○	○
Switch pin pushed in (Clutch pedal released)		

If continuity is not as specified, replace the switch.

PARK/NEUTRAL SWITCH

PARK/NEUTRAL SWITCH INSPECTION

See page AX–35.

STARTER RELAY

STARTER RELAY INSPECTION

CONTINUITY

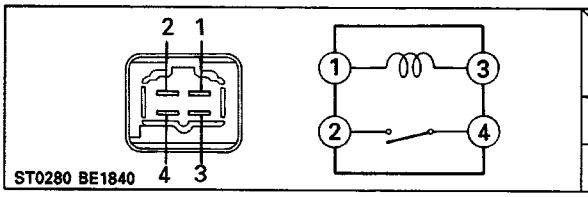

Terminal / Condition	1	2	3	4
Constant	○	⏦	○	
Apply battery voltage to terminals 1 and 3.		○		○

If continuity is not as specified, replace the relay.

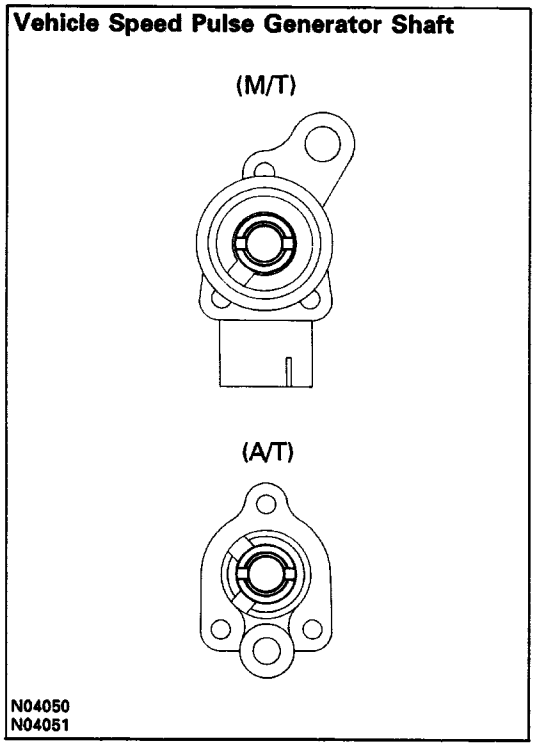

VEHICLE SPEED PULSE GENERATOR

VEHICLE SPEED PULSE GENERATOR INSPECTION

INSPECT VEHICLE SPEED PULSE GENERATOR

(a) Connect the positive (+) lead from battery to terminal 1 and negative (–) lead to terminal 2.
(b) Connect the positive (+) lead from tester to terminal 3 and negative (–) lead to terminal 2.
(c) Revolve shaft.
(d) Check that there is voltage change from approx. 0V to 11V or more between terminal 3 and 2.

HINT: The voltage change should be 4 times per each revolution of the vehicle speed pulse generator shaft.

If operation is not as specified, replace the generator.

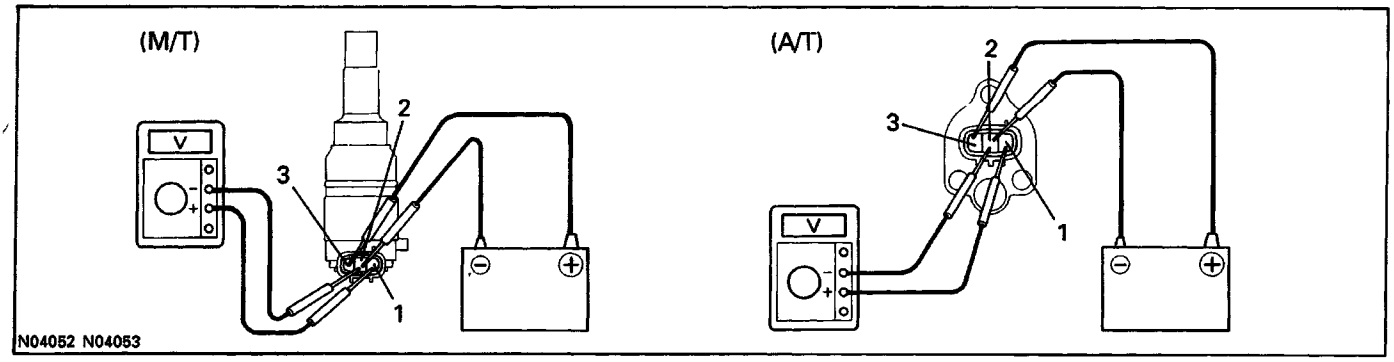

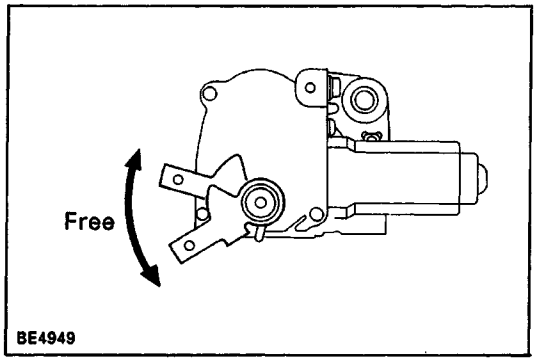

ACTUATOR

ACTUATOR INSPECTION

SAFETY MAGNET CLUTCH

(a) Check that the arm moves smoothly by hand.

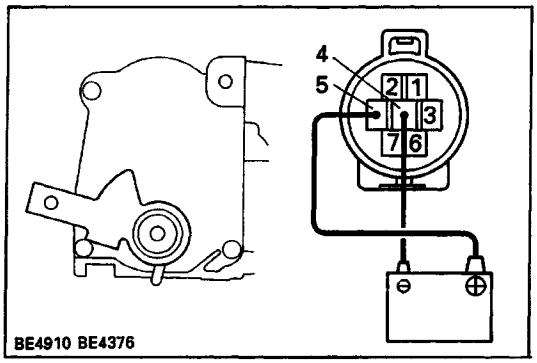

(b) Connect the positive (+) lead from the battery to terminal 5 and the negative H lead to terminal

4. (Safety Magnetic Clutch turned ON)

(c) Check that the arm does not move by hand.

If operation is not as specified, replace the motor.

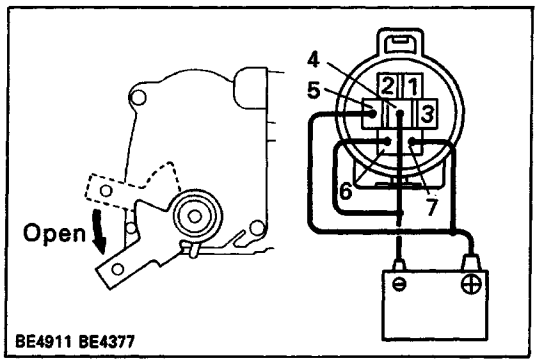

MOTOR

(a) With the safety magnetic clutch ON, connect the positive (+) lead from the battery to terminal 6 and the negative (–) lead to terminal 7, check that the arm moves to the open side.

(b) When the arm reached to the open position, check that the motor operation stops.

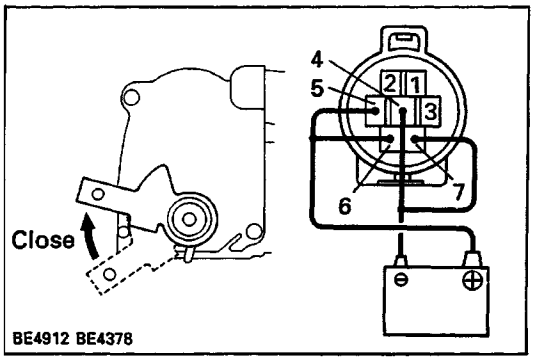

(c) With the safety magnetic clutch ON, connect the positive (+) lead from the battery to terminal 7 and the negative (–) lead to terminal 6, check that the arm moves to the close side.

(d)When the arm reaches to the closed position, check that the motor operation stops.

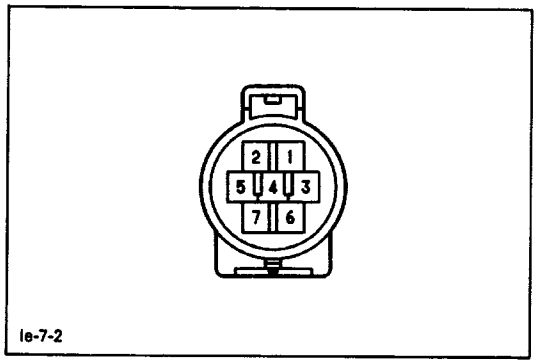

POSITION SENSOR

(a) Measure the resistance between terminals 1 and 3.

Resistance: Approx. 2 Ω

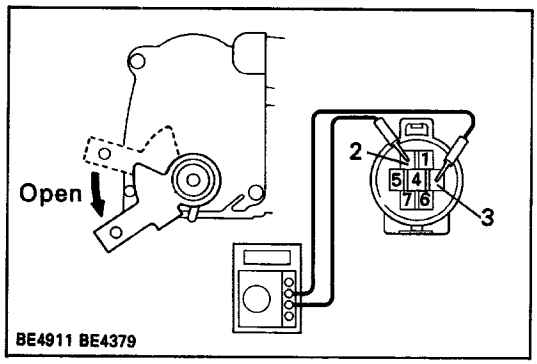

(b) When the arm is moving from the closed to open position, check that resistance between terminals 2 and 3 increases from approx. 0.5 to 1.7 kΩ.

If operation is not as specified, replace the motor.

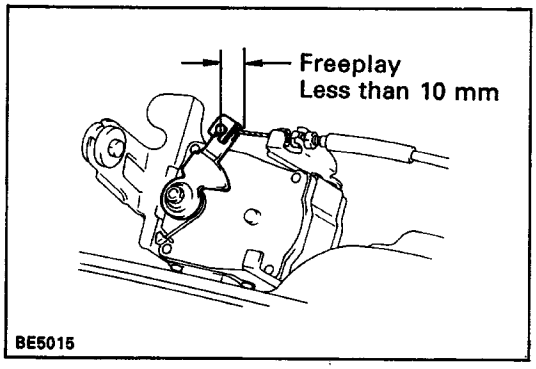

CRUISE CONTROL CABLE

(a) Check that the cruise control cable freeplay is less than 10 mm (0.39 in.).

(b) If necessary adjust the cruise control cable freeplay.

THROTTLE POSITION SENSOR

THROTTLE POSITION SENSOR INSPECTION

See page FI–134 and FI–141.

DEFOGGER SYSTEM

PARTS LOCATION

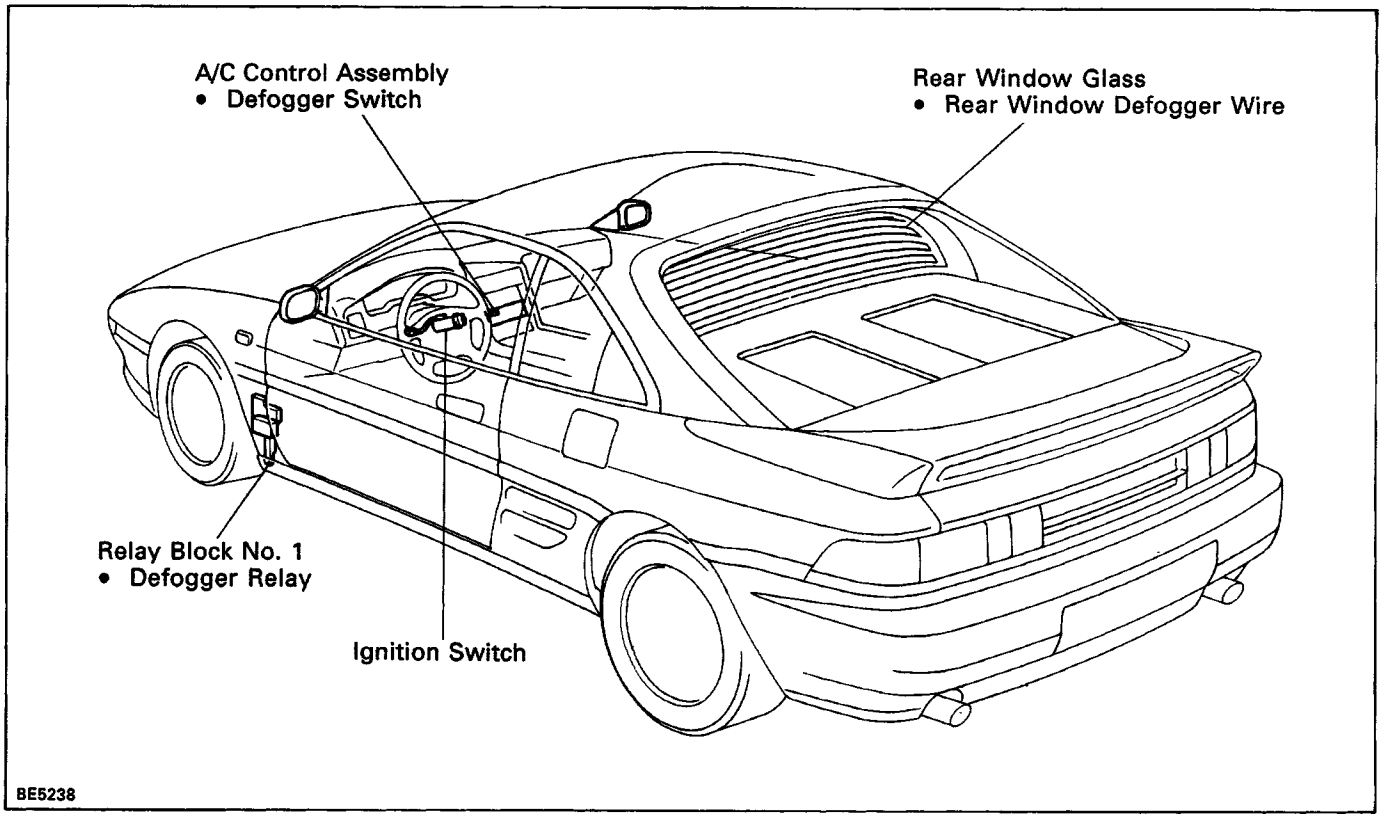

WIRING AND CONNECTOR DIAGRAM

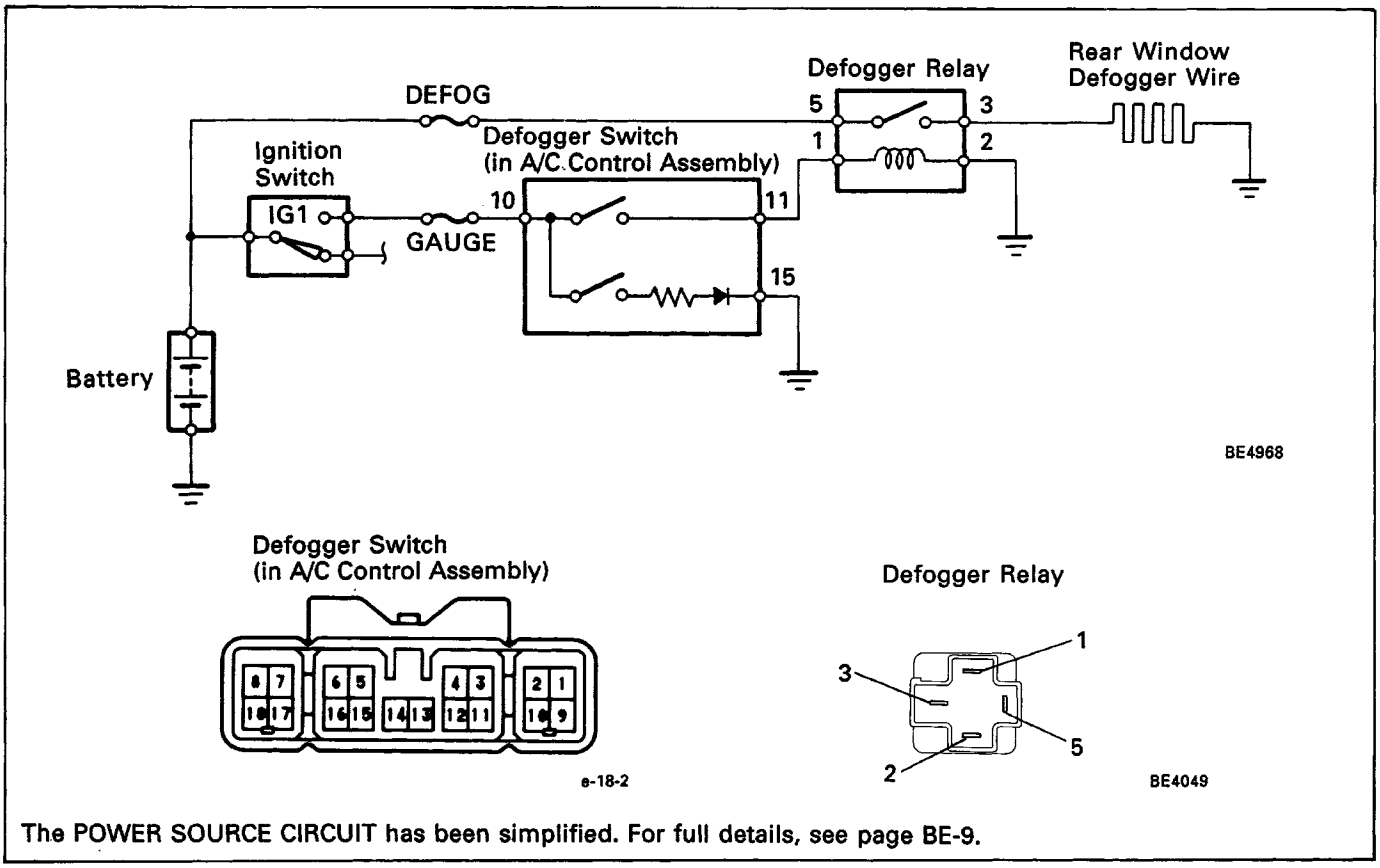

The POWER SOURCE CIRCUIT has been simplified. For full details, see page BE-9.

TROUBLESHOOTING

You will find the troubles easier using the table well shown below. In this table, each number shows the Driority of causes in troubles. Check each part in order.
if necessary, replace these parts.

See page / Part name / Trouble	BE–3 DEFOG Fuse	BE–3 GAUGE Fuse	BE–86 Defogger Switch	BE–86 Defogger Relay	BE–87 Defogger Wire	I Wire Harness
Rear window defogger does not operate	1	2	3	4	5	6

ON–VEHICLE INSPECTION

DEFOGGER IDLE–UP SYSTEM

Set the defogger switch ON, check that the engine revo–lutions increase.

REAR WINDOW DEFOGGER SYSTEM

REAR WINDOW DEFOGGER SWITCH INSPECTION

CONTINUITY

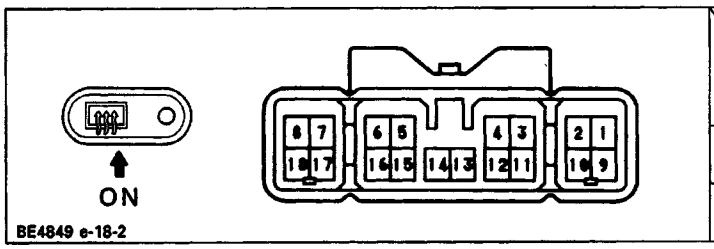

Terminal / Switch position	10	11
OFF		
ON	○———	———○

If continuity is not as specified, replace the switch.

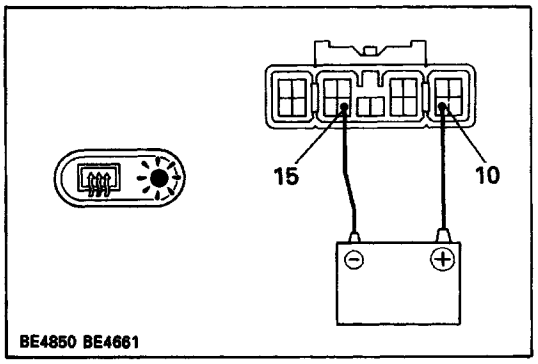

INDICATOR LIGHT/OPERATION

(a) Connect the positive (+) lead from the battery to termi–nal 10 and the negative (–) lead to terminal 15.
(b) Push the defogger switch ON.
(c) Check that the indicator light lights up.
If the indicator light does not light up, replace the switch.

DEFOGGER RELAY

DEFOGGER RELAY INSPECTION

CONTINUITY

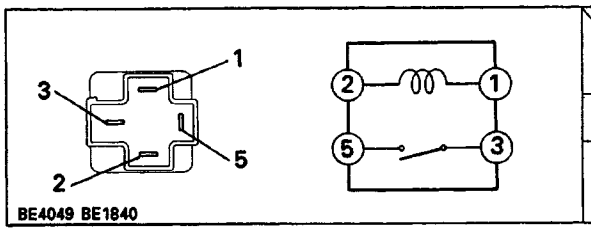

Terminal / Condition	1	2	3	5
Constant	○—WW—○			
Apply battery voltage to terminals 1 and 2.			○———	———○

If continuity is not as specified, replace the relay.

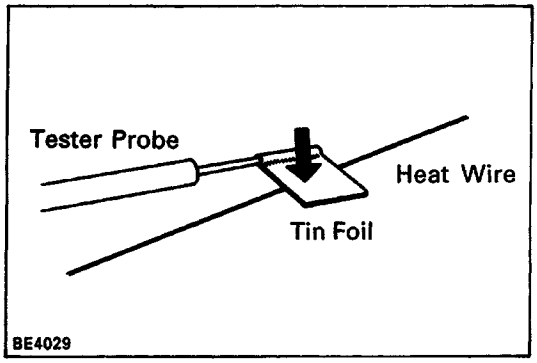

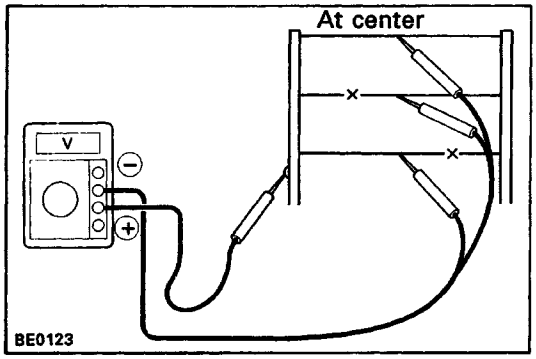

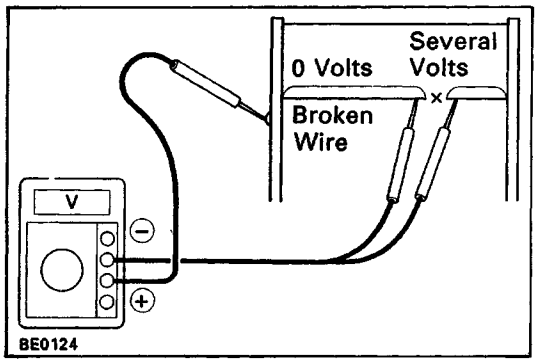

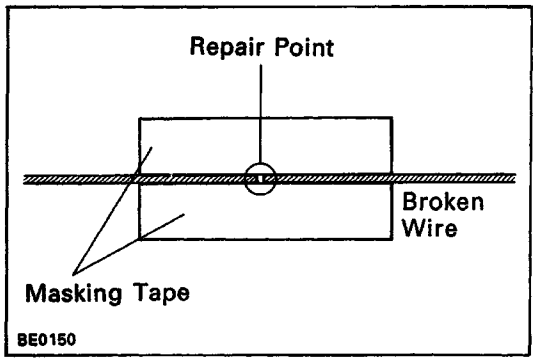

DEFOGGER WIRE

DEFOGGER WIRE INSPECTION

NOTICE:

- **When cleaning the glass, use a soft, dry cloth, and wipe the glass in the direction of the wire. Take care not to damage the wires.**
- **Do not use detergents or glass cleaners with abrasive ingredients.**
- **When measuring voltage, wind a piece of tin foil around the top of the negative probe and press the foil against the wire with your finger as shown.**

WIRE BREAKAGE

(a) Turn the ignition switch ON.
(b) Push in the defogger switch.
(c) Inspect the voltage at the center of each heat wire as shown.

Voltage	Criteria
Approx. 5V	Okay (No break in wire)
Approx. 10V or 0V	Broken Wire

HINT: If there is approximately 10 volts, the wire is broken between the center of the wire and the positive W end. If there is no voltage, the wire is broken between the center of the wire and ground.

WIRE BREAKAGE POINT

(a) Place the voltmeter positive W lead against the defogger positive (+) terminal.
(b) Place the voltmeter negative (–) lead with the foil strip against the heat wire at the positive (+) terminal end and slide it toward the negative (–) terminal end.
(c) The point where the voltmeter deflects from zero to several volts is the place where the heat wire is broken.

HINT: If the heat wire is not broken, the voltmeter indicates 0 volts at the positive (+) end of the heat wire but gradually increases to about 12 volts as the meter probe is moved to the other end.

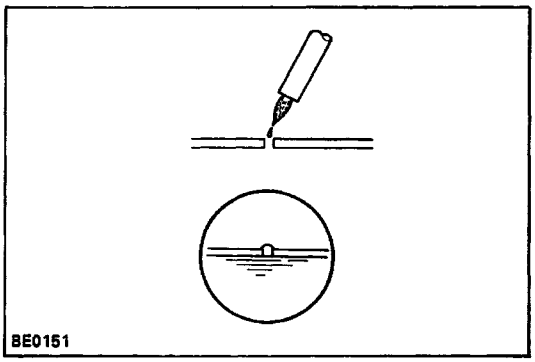

DEFOGGER WIRE REPAIR

(a) Clean the broken wire tips with a grease, wax and silicone remover.
(b) Place the masking tape along both sides of the wire to be repaired.
(c) Thoroughly mix the repair agent (Dupont paste No. 4817).
(d) Using a fine tip brush, apply a small amount to the wire.
(e) After a few minutes, remove the masking tape.
(f) Allow the repair to stand at least 24 hours.

FRONT FOG LIGHT SYSTEM

PARTS LOCATION

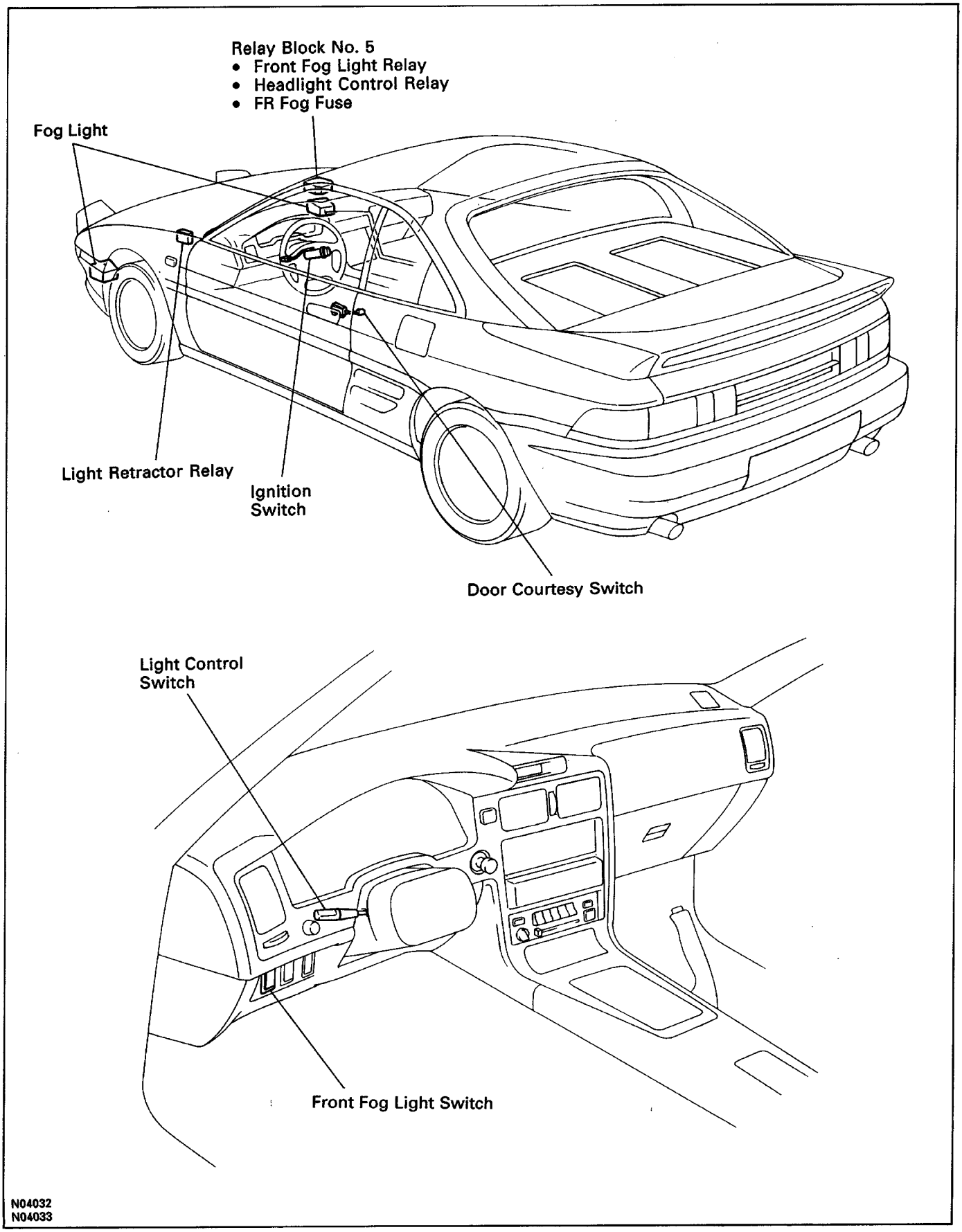

N04032
N04033

WIRING AND CONNECTOR DIAGRAMS
(USA)

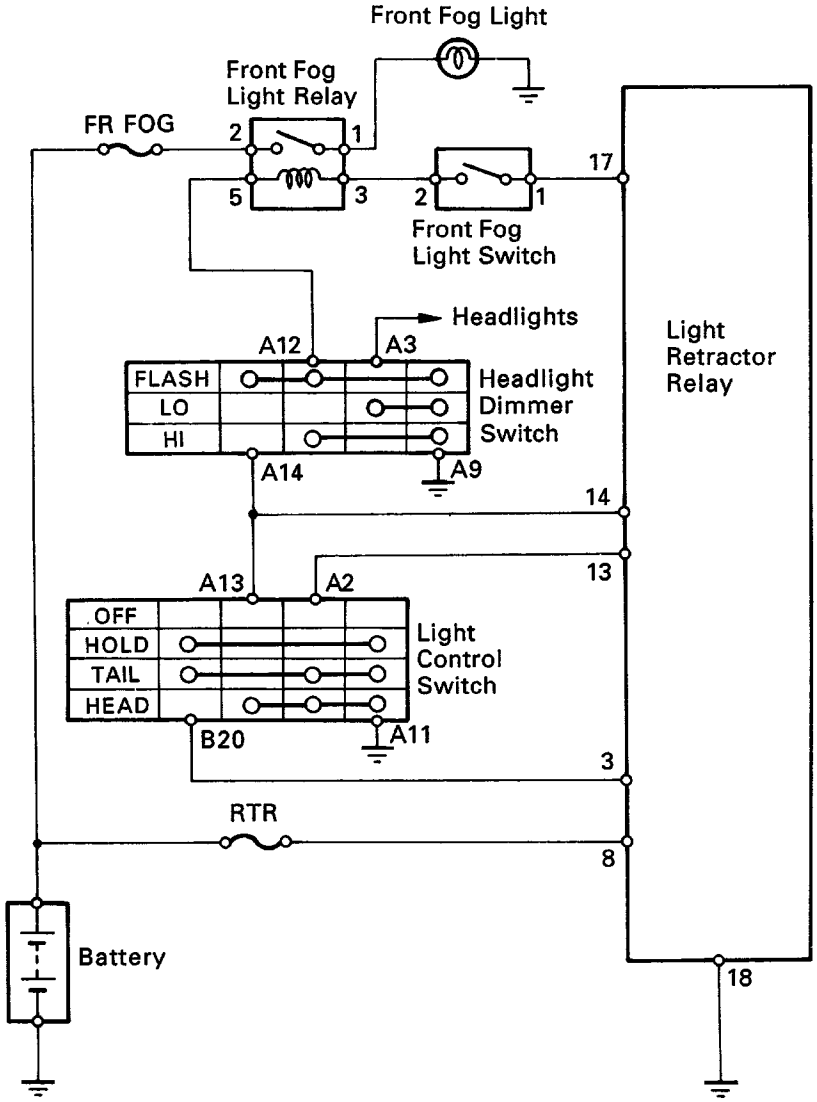

N04035

Front Fog Light Relay

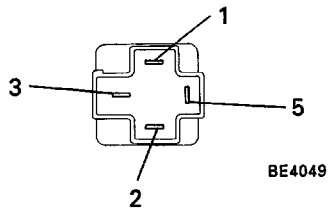

BE4049

Front Fog Light Switch

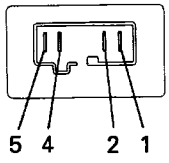

BE4707

Light Control Switch Headlight Dimmer Switch

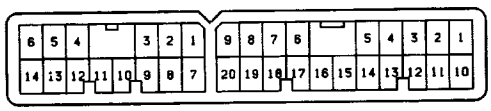

Connector "A" Connector "B"

V-34-2

Light Retractor Relay

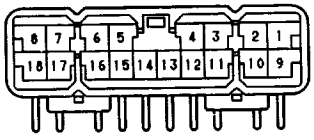

e-18-2-A

The POWER SOURCE CIRCUIT has been simplified. For full details, see page BE-9.

(CANADA)

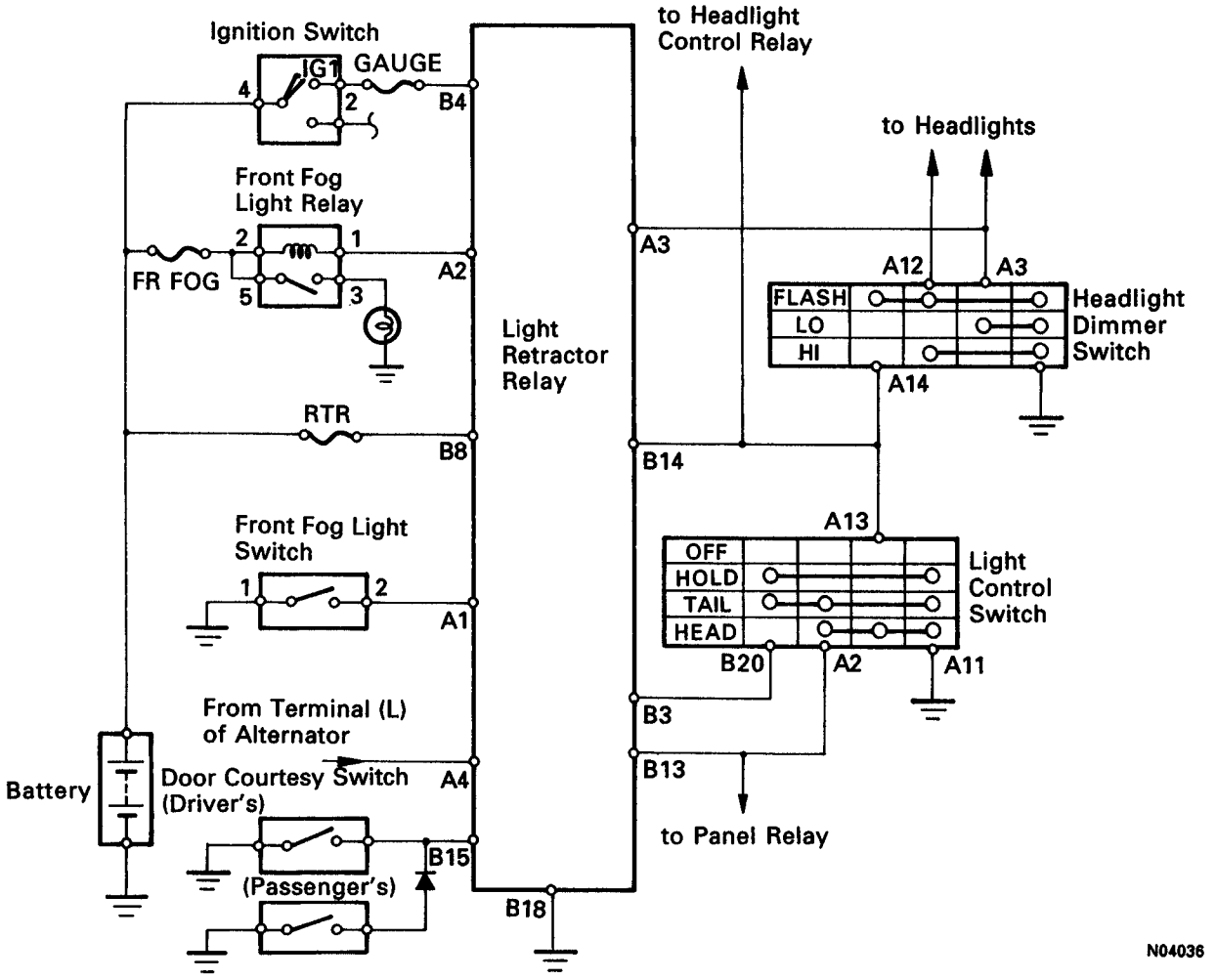

Light Control Switch, Headlight Dimmer Switch

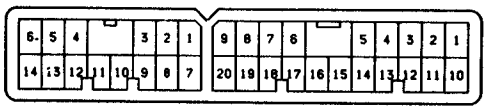

V-34-2

Front Fog Light Relay

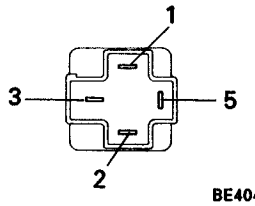

BE4049

Front Fog Light Switch

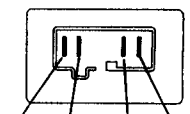

BE4707

Light Retractor Relay

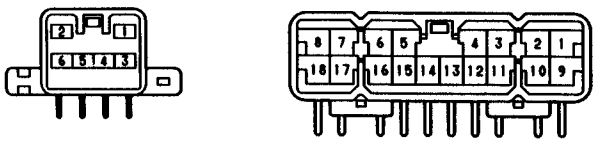

e-6-2-A

e-18-2-A

The POWER SOURCE CIRCUIT has been simplified. For full details, see page BE–9.

SYSTEM DESCRIPTION

DAYTIME RUNNING LIGHT SYSTEM

The Daytime Running Light (DRL) system is activated when engine is started (However, if the parking brake lever is engaged when the engine is started, the DRL will not light up after the engine has started. Once the parking brake is released, the DRL will then light up and will remain on regardless of operation of the parking brake lever).
The DRL remain on until the ignition switch is turned off.

(CANADA)

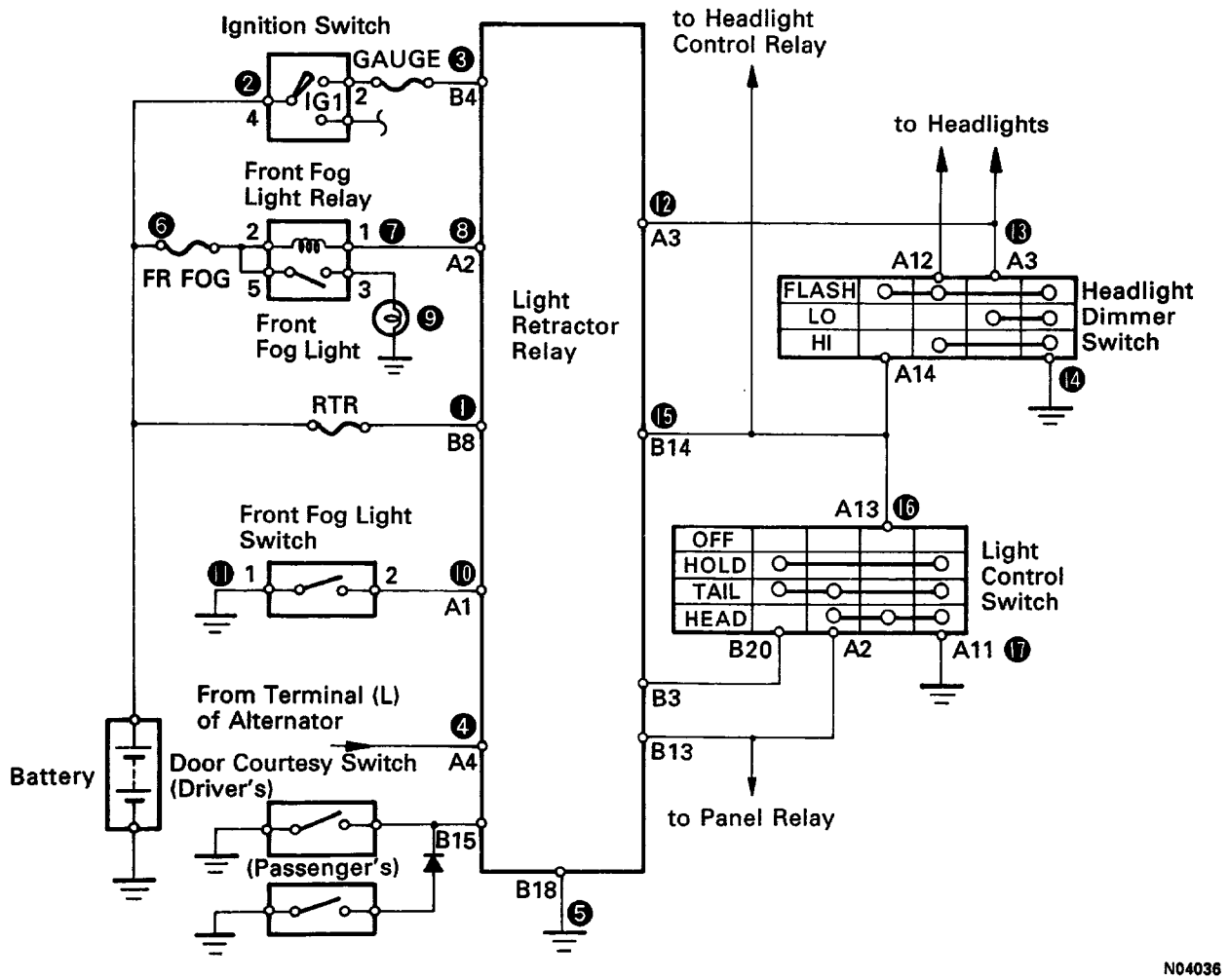

The POWER SOURCE CIRCUIT has been simplified. For full details, see page BE-9.

OPERATION EXAMPLE (CURRENT FLOW TABLE)

1. DAYTIME RUNNING LIGHT LIGHTS UP

Switch	Position
Ignition Switch	*ON
Light Control Switch	OFF
Headlight Dimmer Switch	LO or HI
*Door Courtesy Switch	ON

*** with Engine Running**

Condition: Battery voltage ⟶ ❶, Battery voltage ⟶ ❷ ⟶ ❸, Battery voltage ⟶ ❹
Continuity: ❺ ⟶ Ground

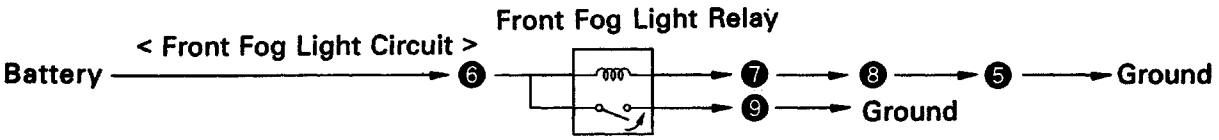

BE5651

2. FRONT FOG LIGHT LIGHTS UP

Switch	Position
Ignition Switch	OFF or ON
Light Control Switch	HEAD
Headlight Dimmer Switch	LO
* Door Courtesy Switch	ON
Front Fog Light Switch	ON

Condition: Battery voltage ⟶ ❶, Battery voltage ⟶ ❷ ⟶ ❸, Battery voltage ⟶ ❹
Continuity: ❺ ⟶ Ground
❿ ⟶ ⓫ ⟶ Ground
⓬ ⟶ ⓭ ⟶ ⓮ ⟶ Ground
⓯ ⟶ ⓰ ⟶ ⓱ ⟶ Ground

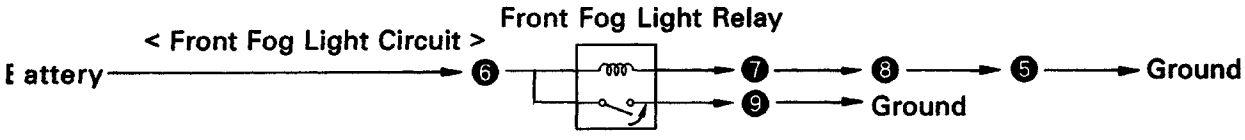

BE5651

TROUBLESHOOTING

You will find the cause of troubles more easily using the table shown below. In this table, the numbers indicate the order priority of the causes in trouble. Check each ,part in the order shown. If necessary, replace the parts.

See page / Part name / Trouble	FR FOG Fuse (BE–3)	* HEAD Fuse (BE–3)	Front Fog Light Relay (BE–41)	* Headlight Control Relay (BE–30)	* Light Retractor Relay (BE–31)	Front Fog Light Switch (BE–41)	Bulb	Wire Harness	Other Parts
Fog light does not light with light control SW HEAD (Headlight is normal).	1	2	3	4	5	6		7	
Fog light does not light with light control SW HEAD (Headlight does not light).								2	1 *2
Only one light does not light.							1	2	

*: w/o Daytime Running Light Relay
*: w/ Daytime Running Light Relay
*: Inspect Headlight System

OPERATION EXAMPLE (CURRENT FLOW TABLE
1. DAYTIME RUNNING LIGHT LIGHTS UP

Switch	Position
Ignition Switch	*ON
Light Control Switch	OFF
Headlight Dimmer Switch	LO or HI
*1 Door Courtesy Switch	ON

with Engine Running

Condition: Battery voltage → ❶, Battery voltage → ❷ → ❸, Battery voltage → ❹
Continuity: ❺ → Ground

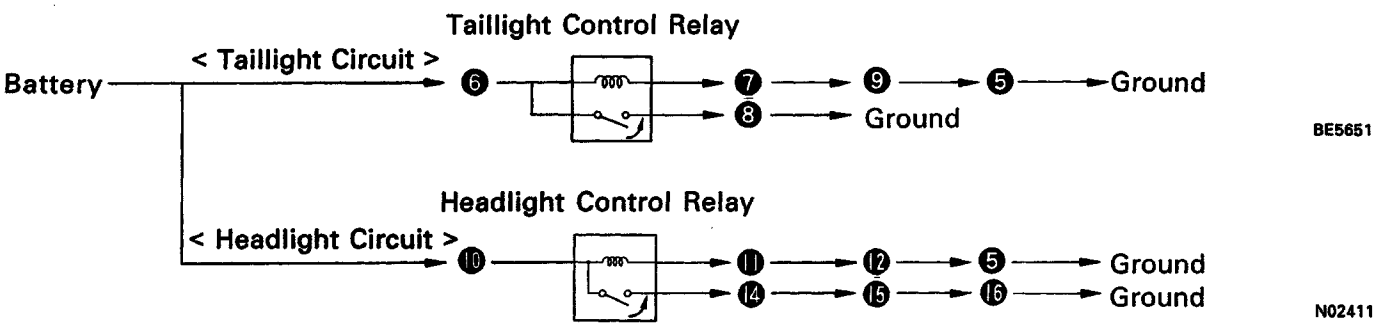

2. TAILLIGHT LIGHTS UP

Switch	Position
Ignition Switch	OFF* or ON
Light Control Switch	TAIL
Headlight Dimmer Switch	LO or HI
*1 Door Courtesy Switch	ON

* with Engine Running

Condition: Battery voltage → ❶, *(Battery voltage → ❷ → ❸, Battery voltage → ❹)
Continuity: ❺ → Ground

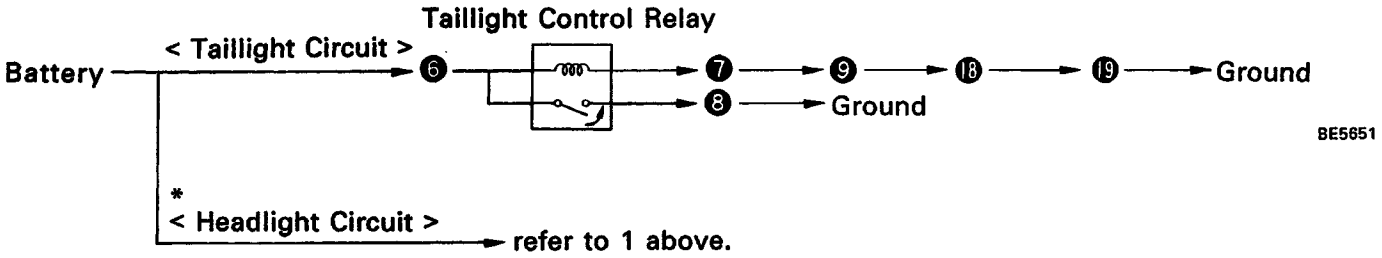

BODY ELECTRICAL SYSTEM

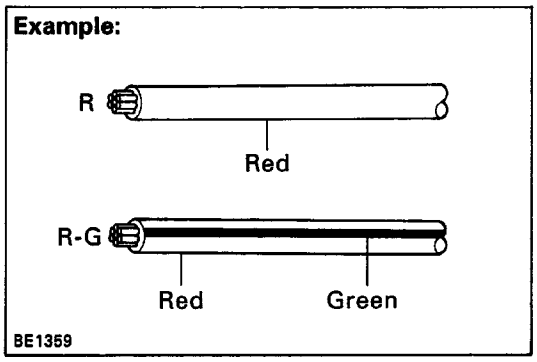

GENERAL INFORMATION

WIRING COLOR CODE

Wire colors are indicated by an alphabetical code.
B = Black L = Blue R = Red
BR = Brown LG = Light Green V = Violet
G = Green 0 = Orange W = White
GR = Gray P = Pink = Yellow
The first letter indicates the basic wire color and the second letter indicates the color of the stripe.

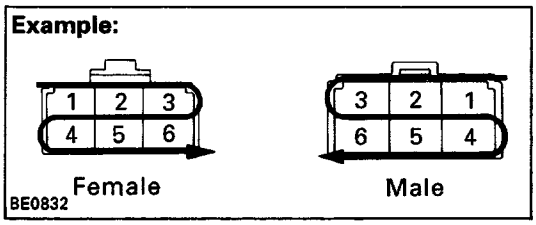

CONNECTOR

1. PIN NUMBER OF FEMALE CONNECTOR

Numbered in order from upper left to lower right.

2. PIN NUMBER OF MALE CONNECTOR

Numbered in order from upper right to lower left.
HINT: When connectors with different or the same number of terminals are used with the same parts, each connector name (letter of the alphabet) and pin number is specified.

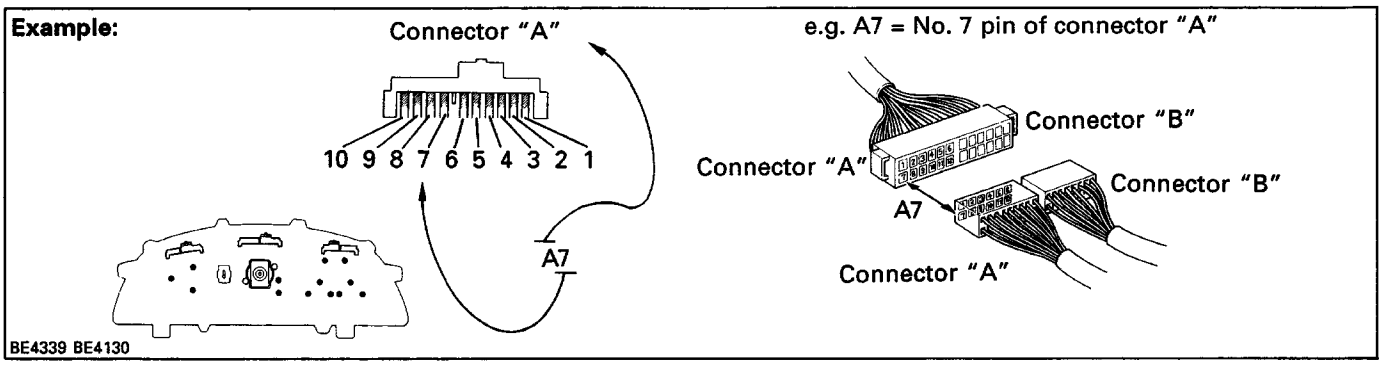

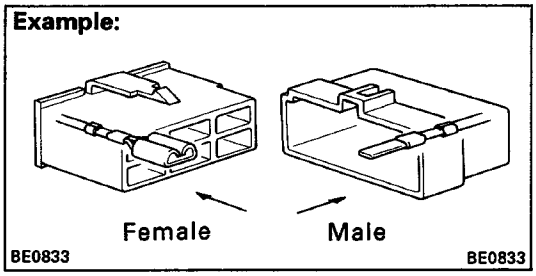

3. DISTINCTION OF MALE AND FEMALE CONNECTORS

Male and female connectors are distinguished by shape of their internal pins.

(a) All connectors are shown from the open end, and the lock is on top.

(b) To pull apart the connectors, pull on the connector itself, not the wires.

HINT: Check to see what kind of connector you are disconnecting before pulling apart.

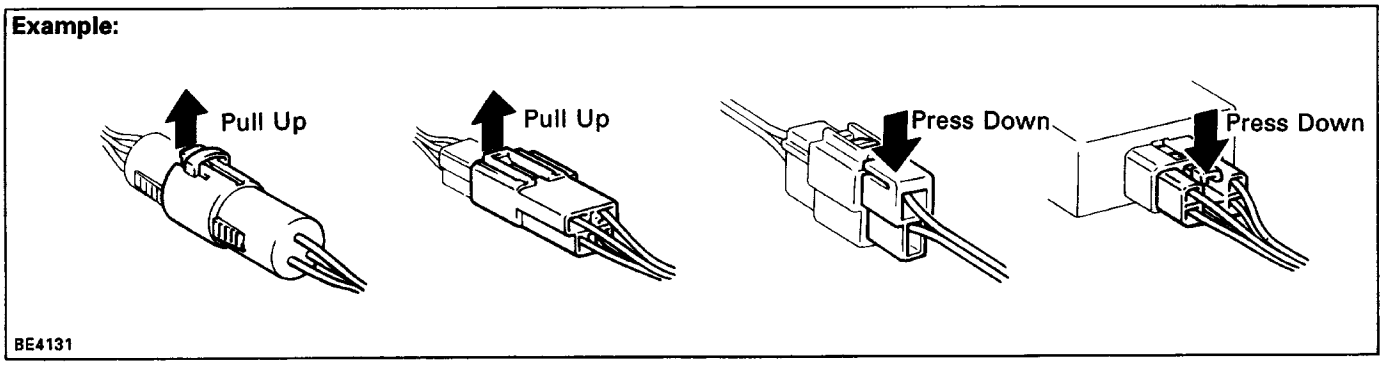

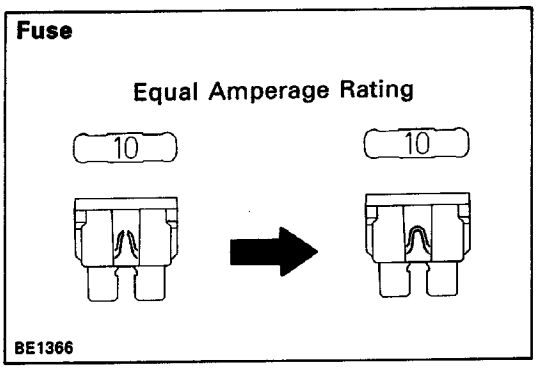

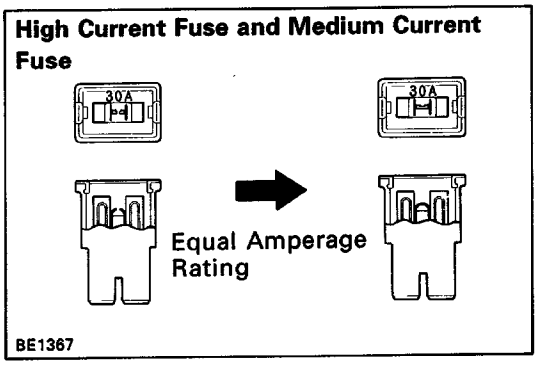

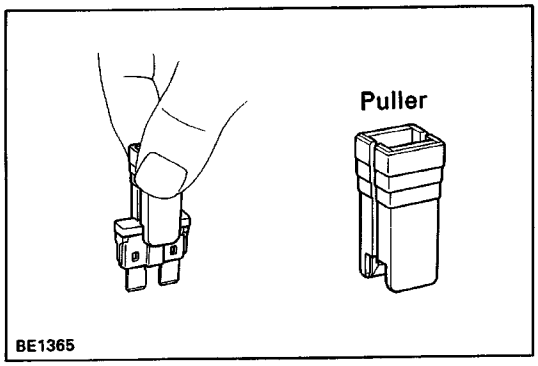

REPLACEMENT OF FUSE

HINT: If replacing the fuse, be sure to replace it with a fuse with and equal amperage rating.

NOTICE:

1. Turn off all electrical components and the ignition switch before replacing a fuse. Do not exceed the fuse amperage rating.

2. Always use a fuse puller for removing and inserting a fuse. Remove and insert straight in and out without twisting. Twisting could force open the terminals too much, resulting in a bed connection.

If a fuse continues to blow, a short circuit is indicated. The system must be checked by a qualified technician.

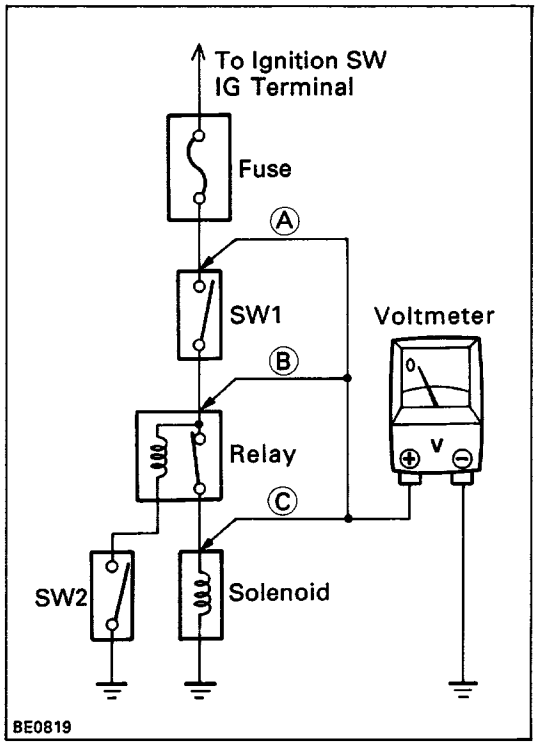

CHECK FOR VOLTAGE

(a) Establish conditions in which voltage is present at the check point.
Example:
(A) – Ignition switch on.
(B) – Ignition switch and switch 1 (SW1) on.
(C) – Ignition switch, switch 1 (SW1) and relay on (switch 2 (SW2) off).

(b) Using a voltmeter, connect the negative (–) lead to a good ground point or negative (–) battery terminal and the positive (+) lead to the connector or component terminal. This check can be done with a test bulb instead of a voltmeter.

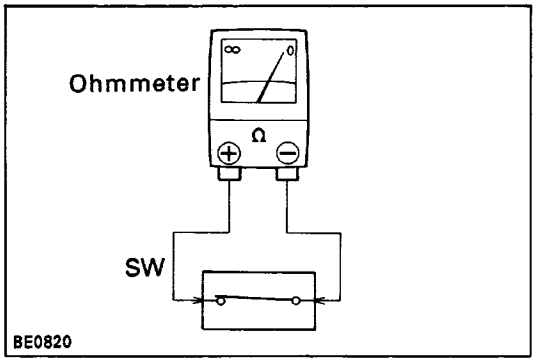

CHECK FOR CONTINUITY AND RESISTANCE

(a) Disconnect the battery terminal or wire so there is no voltage between the check points.

(b) Contact the two leads of an ohmmeter to each of the check points.

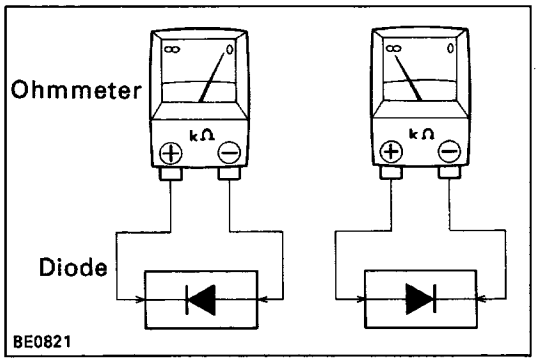

If the circuit has diodes, reverse the two leads and check again.
When contacting the negative(–) lead to the diode positive (+) side and the positive (+) lead to the negative (–) side, there should be continuity. When contacting the two leads in reverse, there should be no continuity.

HINT: Specifications may vary depending on the type of tester, so refer to the tester's instruction manual before performing the inspection.

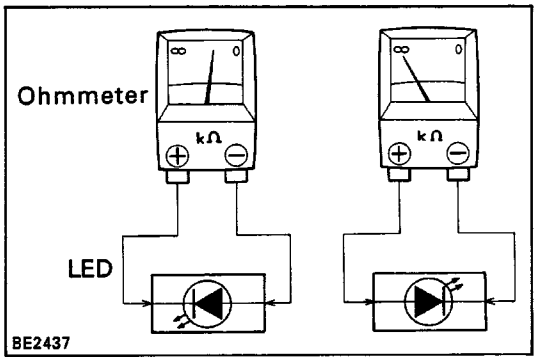

Check LED (Light Emitting Diode) in the same manner as that for diodes.

- Use a tester with a power source of 3V or greater to overcome the circuit resistance.
- If a suitable tester is not available, apply battery voltage and check that the LED that the LED lights up.

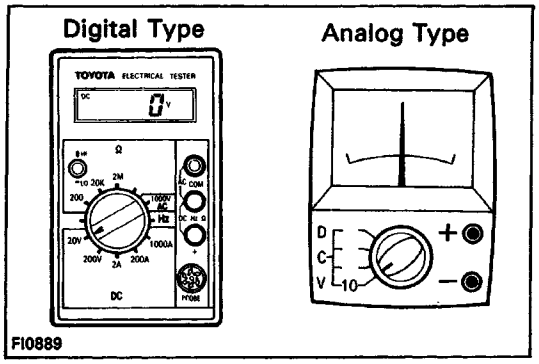

(c) Use a volt/ohmmeter with high impedance (10k/V minimum) for troubleshooting of the electrical circuit.

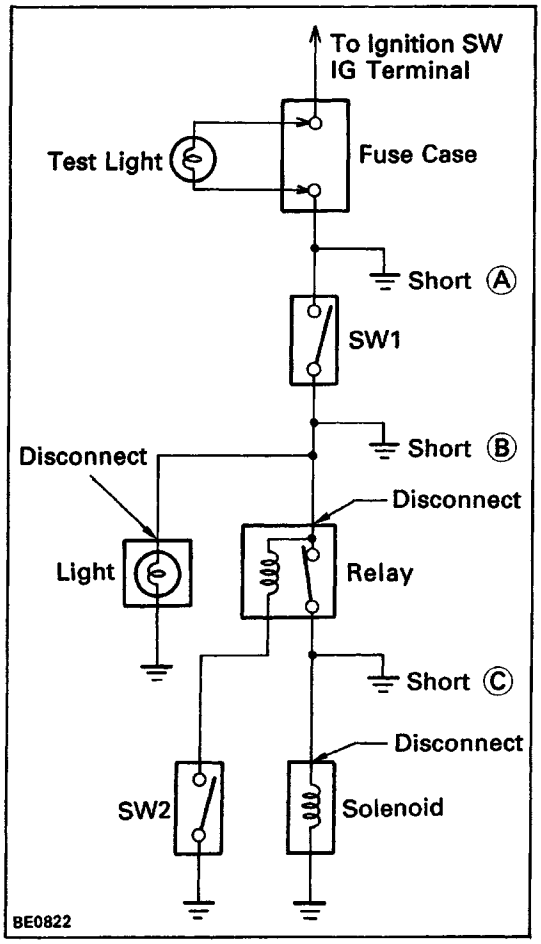

CHECK FOR SHORT CIRCUIT

(a) Remove the blown fuse and eliminate all loads from the fuse.
(b) Connect a test bulb in place of the fuse.
(c) Establish conditions in which the test bulb comes on.
Example:
(A) – Ignition switch on.
(B) – Ignition switch and switch 1 (SW1) on.
(C) – Ignition switch, switch 1 (SW1) and relay on (connect the relay) and switch 2 (SW2) off (or disconnect switch 2 (SW2)).
(d) Disconnect and reconnect the connectors while watching the test bulb.
The short lies between the connector where the test bulb stays lit and the connector where the bulb goes out.
(e) Find the exact location of the short by lightly shaking the problem wire along the body.

ELECTRICAL PARTS

Before removing and inspecting the electrical parts, set the ignition switch to the LOCK position and disconnect the negative (–) terminal cable from the battery.
CAUTION: Work must not be started until after at least 20 seconds or longer from the time the negative (–) terminal cable is disconnected.

SRS AIR–BAG SYSTEM

Failure to carry out service operations in the correct sequence could cause the airbag system to deploy, possibly leading to a serious accident.
When removal or installation of the parts and the yellow wire harness and connector for the airbag is necessary, refer to the precautionary notices in the AB section before performing the operation.

HEADLIGHT AND TAILLIGHT SYSTEM

PARTS LOCATION

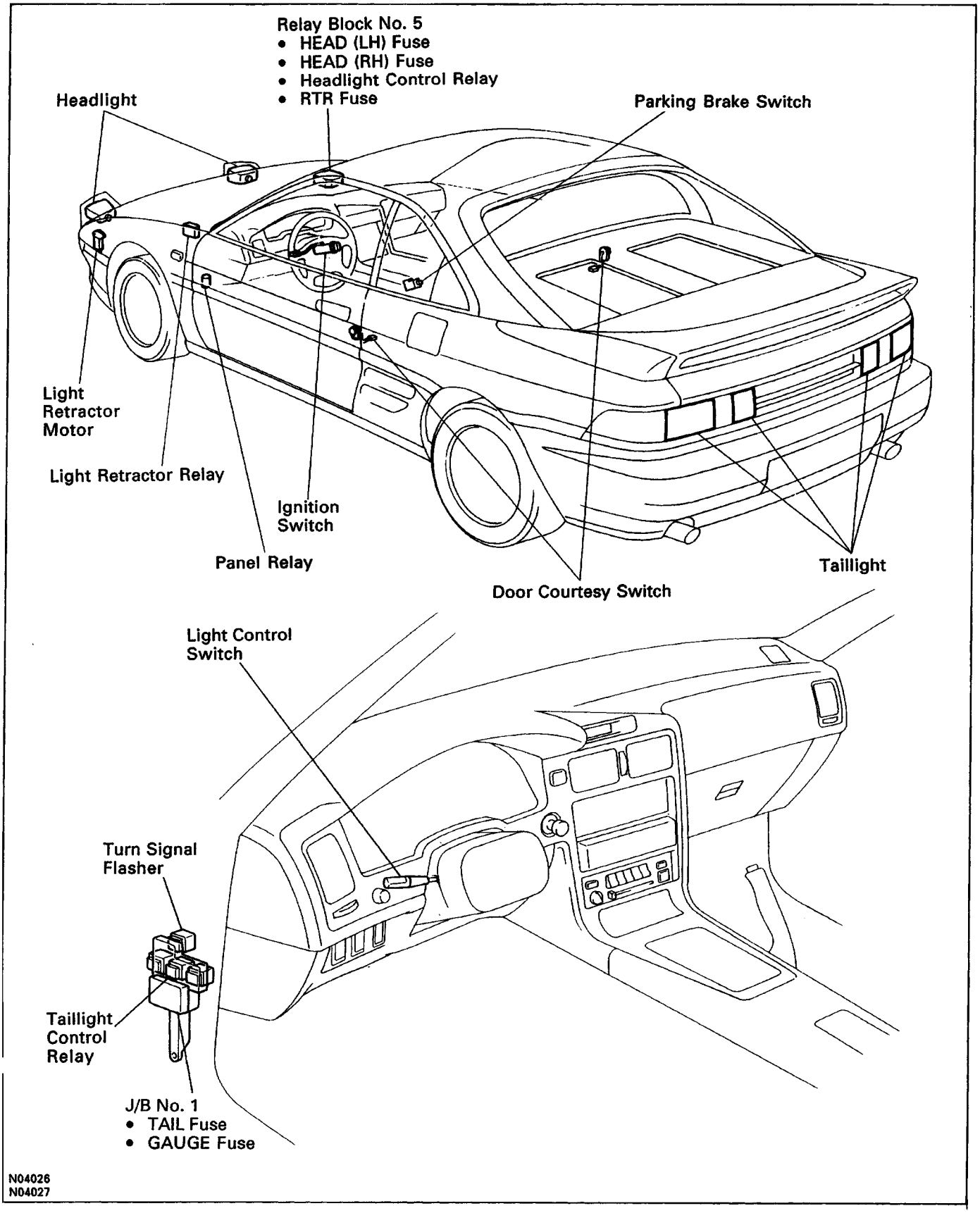

WIRING AND CONNECTOR DIAGRAMS

(USA)

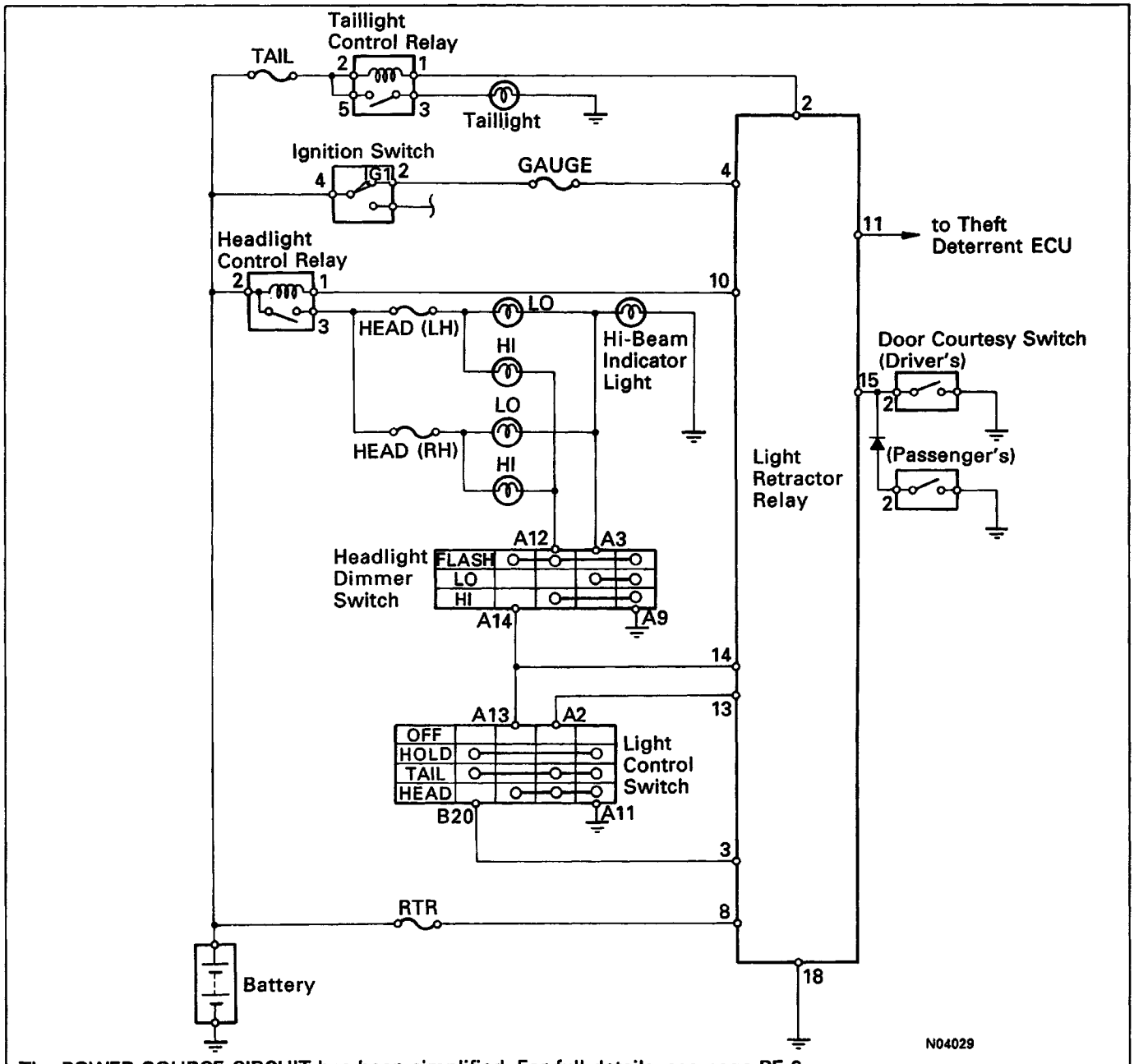

The POWER SOURCE CIRCUIT has been simplified. For full details, see page BE-9.

Headlight Control Relay

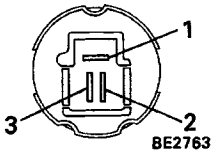

Taillight Control Relay

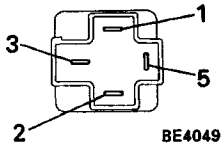

Light Retractor Relay

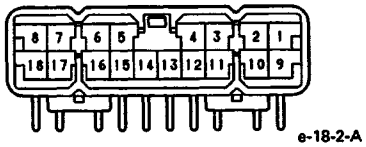

Light Control Switch, Headlight Dimmer Switch

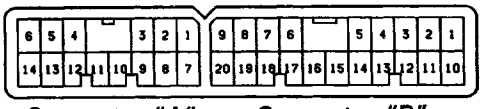

Ignition Switch

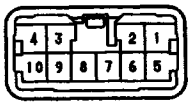

Door Courtesy Switch



(CANADA)

Daytime Running Light System

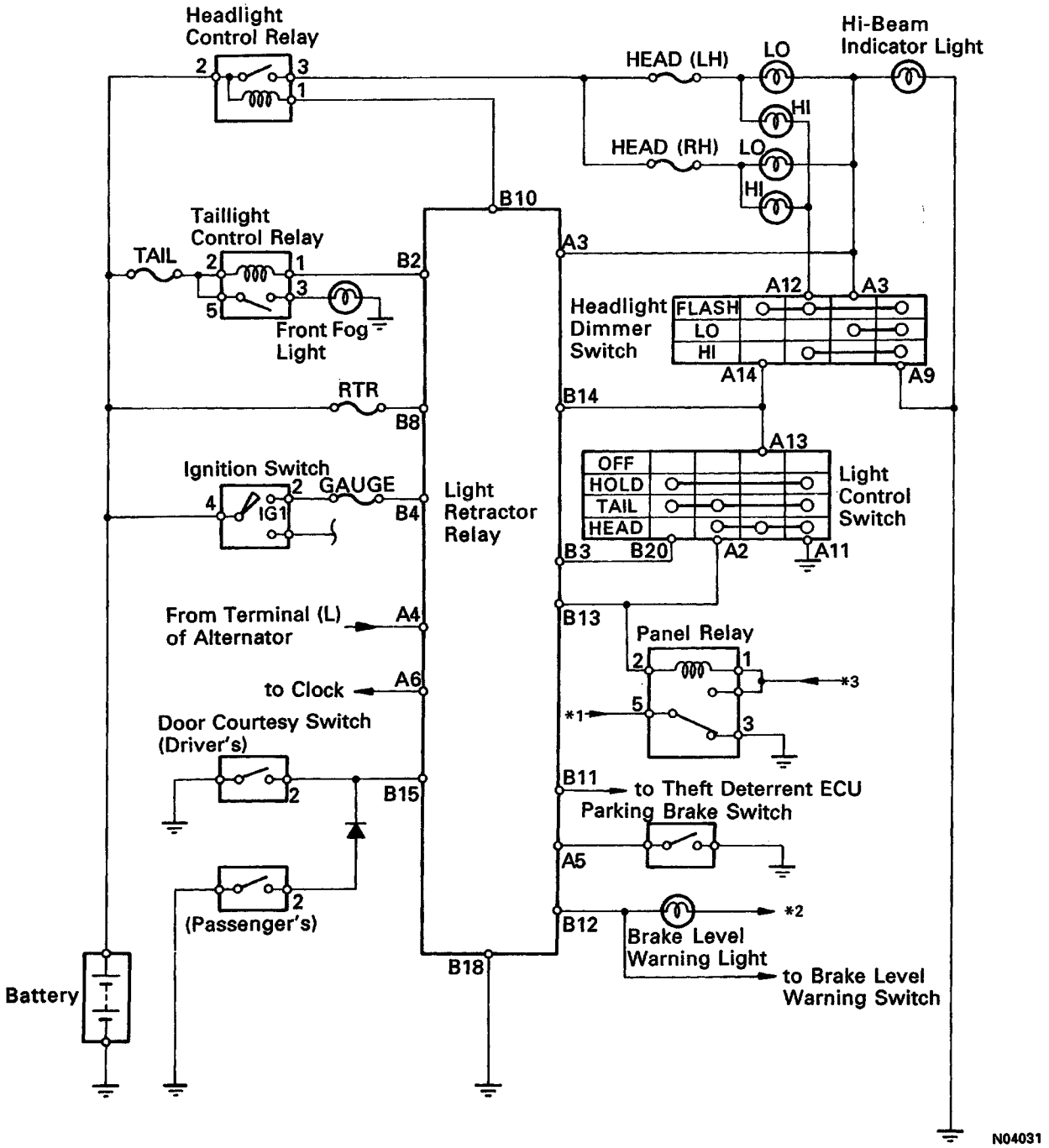

*1 Front Indicator Lights (Light Control Switch: TAIL or HEAD) to Illumination (Light Control Switch: OFF)
*2 from GAUGE Fuse
*3 from Terminal 3 of Taillight Control Relay

The POWER SOURCE CIRCUIT has been simplified. For full details, see page BE-9.

CONNECTOR DIAGRAMS

Ignition Switch

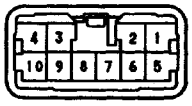

g-10-2-B

Headlight Control Relay

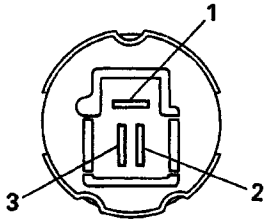

BE2763

Taillight Control Relay

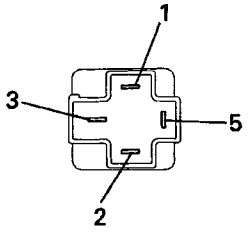

BE4049

Light Retractor Relay

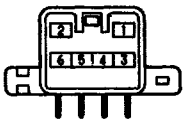

Connector "A"

e-6-2-A

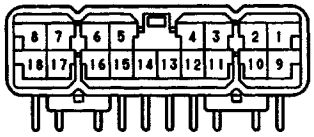

Connector "B"

e-18-2-A

Door Courtesy Switch



e-2-1-G

Light Control Switch, Headlight Dimmer Switch

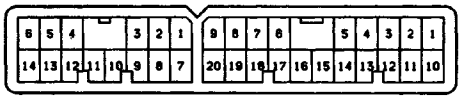

Connector "A" Connector "B"

V-34-2

LIGHT RETRACTABLE SYSTEM

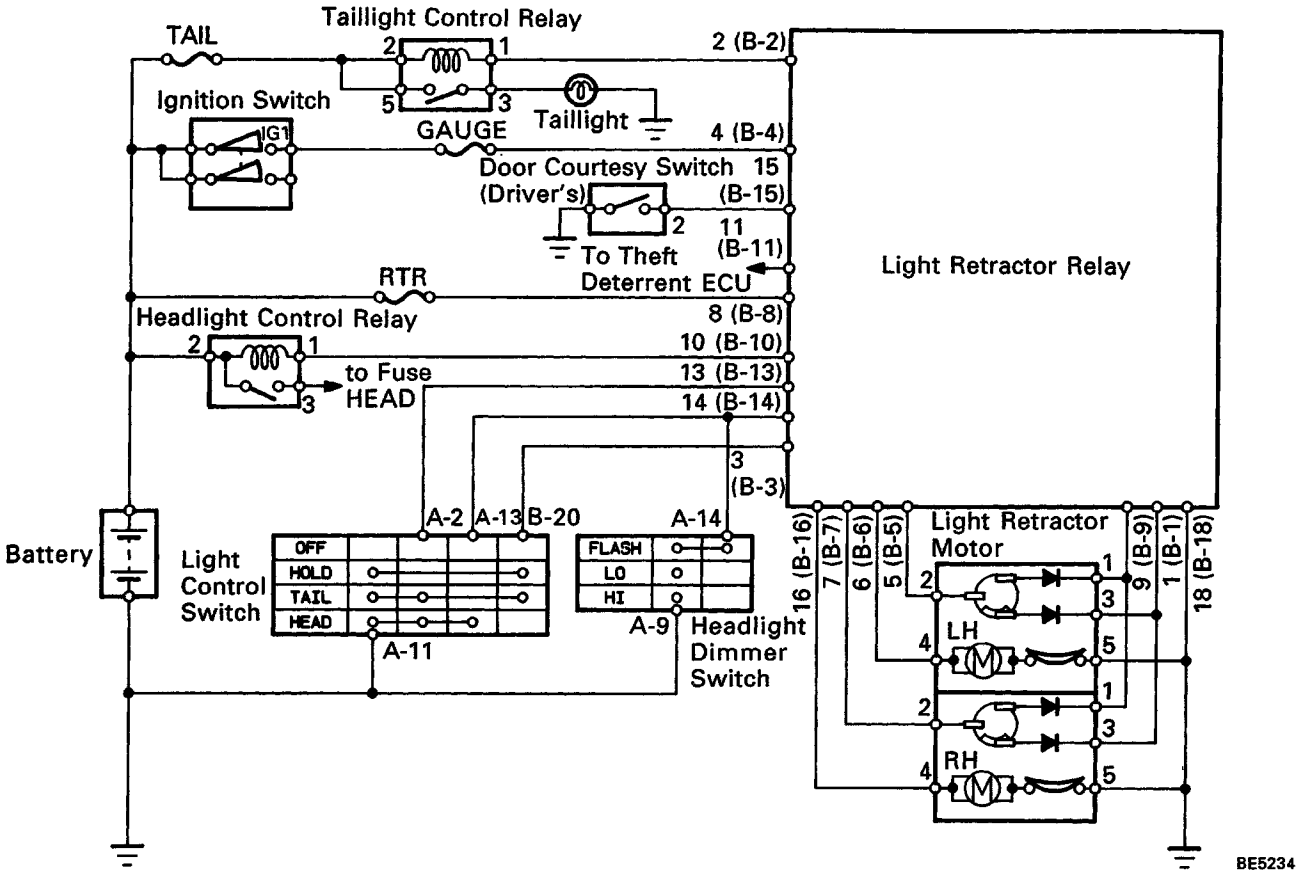

The terminals indicated in brackets ( ) are for CANADA models.
The POWER SOURCE CIRCUIT has been simplified. For full details, see page BE-9.

Headlight Control Relay

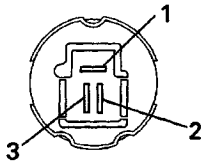

BE2763

Light Control Switch, Headlight Dimmer Switch

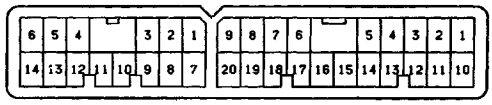

Connector "A" Connector "B"

V-34-2

Light Retractor Motor



IJ-5-2-A

Light Retractor Relay

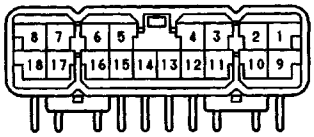

(USA) e-18-2-A

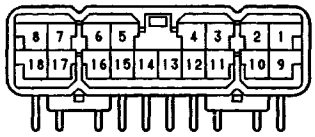

Connector "B" (CANADA) e-18-2-A

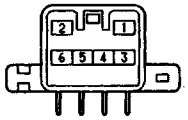

Connector "A" e-6-2-A

Taillight Control Relay

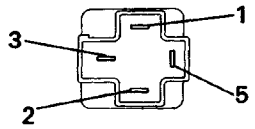

BE4049

Ignition Switch

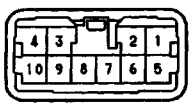

g-10-2-B

Door Courtesy Switch



e-2-1-G

SYSTEM DESCRIPTION

LIGHT RETRACTABLE SYSTEM

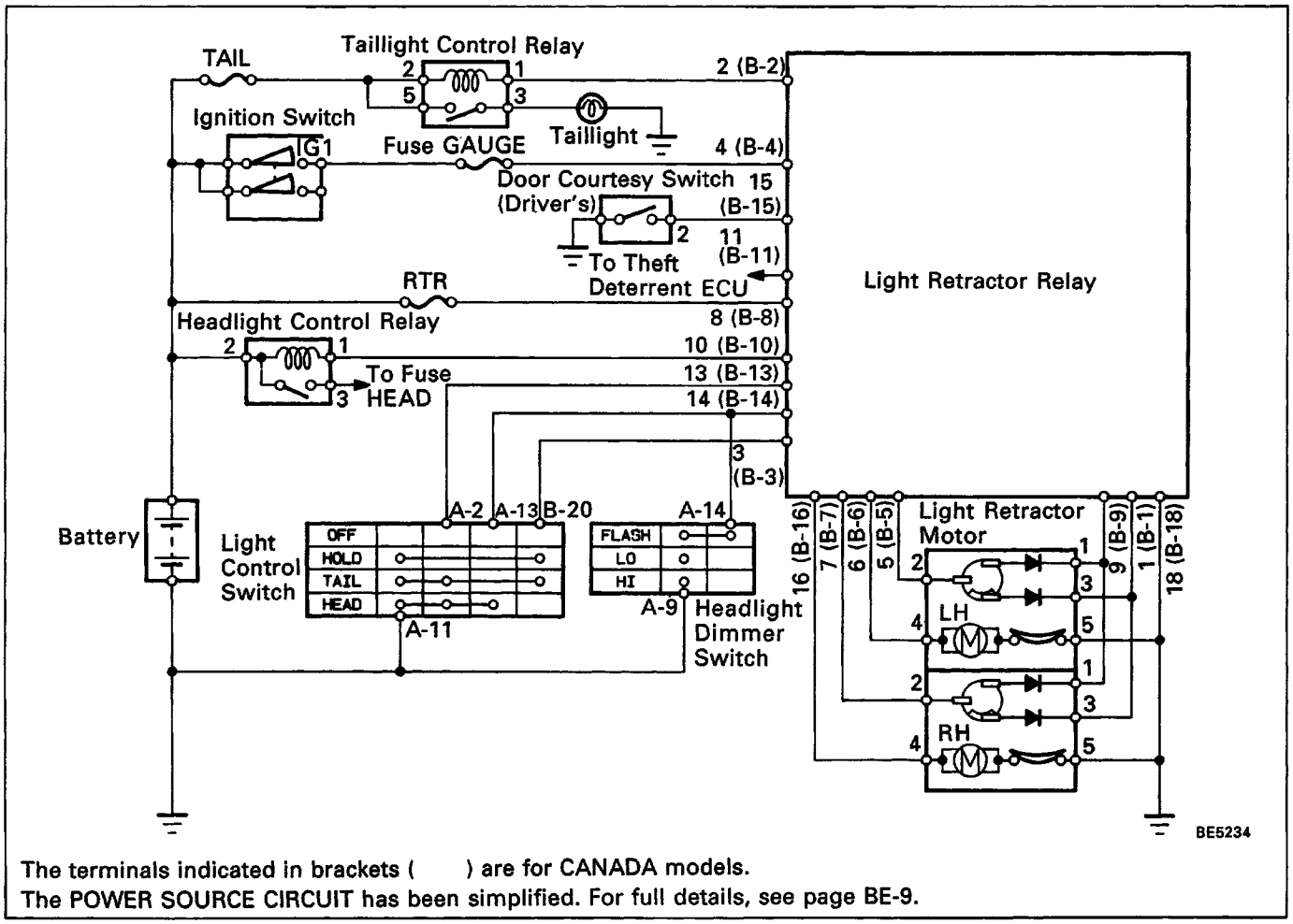

The terminals indicated in brackets ( ) are for CANADA models.
The POWER SOURCE CIRCUIT has been simplified. For full details, see page BE-9.

- Current flows from the battery to terminal 8 (B–8) of the light retractor relay.
- Battery voltage is applied to terminal 5 (B–5) and 7 (B–7) of the light retractor relay.

Operation examples of the switch are shown below;
HINT: The numbers in [ ] are for the left side headlight.

1. LIGHT CONTROL SWITCH IN "TAIL"

When the switch is set continuity is produced between terminal 13 (B–13) of the light retractor relay (hereafter called LRR) and the body ground. Also, because continuity is produced between terminal 2 (B–2) of the LRR and the body ground, the taillight control relay (hereafter called TCR) is turned on. Then the taillights light up.

2. LIGHT CONTROL SWITCH IN "HEAD"

When the switch is set continuity is produced between terminal 13 (B–13) of the LRR and the body-ground, and 14 (B–14) of the LRR and the body ground of the LRR.

- Also continuity is produced between terminals 9 (B–9) and 18 (B–18) of the LRR. Then the LRR operates to lead current from terminal 8→ terminal 16 (B–16) [6 (B–6)] of the LRR→ terminal 4 of the light retractor motor→terminal 5 of the motor →the body ground, and the motor starts, to run in order to raise the headlights.

When the headlights rise, the limit switch operates, so that continuity is broken between terminals 2 and1 of the motor, and continuity is produced between terminals 2 and 3.
As a result, because the LRR is interrupted, the headlights stay in position.

- Also, because continuity is produced between terminal 2 (B–2) of the LRR and the body ground, and 10 (B–10) of the LRR and the body ground, the TCR and the headlight control relay (hereafter called HCR) are turned on.

  Then the taillights and the headlights light up.

3. LIGHT CONTROL SWITCH CHANGED FROM "HEAD" TO "TAIL"

When the switch is set continuity is broken between terminal 14 (B–14) of the LRR and the body ground, and continuity is produced between terminal 3 (B–3) of the LRR and body ground.

- As a result, the headlights are kept in position.
- By breaking continuity between terminal 14 (B–14) of the LRR and the body ground, continuity is broken between terminal 10 (B–10) and the body ground.
  Then the headlights go out.

4. LIGHT CONTROL SWITCH CHANGED FROM "TAIL" TO "HOLD"

When the switch is set, continuity is broken between terminal 13 (B–13) of the LRR and the bodyground. Also, because continuity is broken between terminal 2 (B–2) of the LRR and the bodyground, the TCR is turned off.

Then the taillights go out.

The headlights are kept in position, because continuity is kept between terminal 3 (B–3) of the LRR and the body ground.

5. LIGHT CONTROL SWITCH CHANGED FROM "HOLD" TO "OFF"

When the switch is set, continuity is broken between terminal 3 (B–3) of the LRR and the body ground, so that continuity is produced between terminal 1 (B–1) and 18 (B–18) of the LRR.

Then the LRR operates so that the current flows from terminal 8 (B–8)→ terminal 16 (B–16) [6 (B–6)] of the LRR→terminal 4 of the light retractor motor → terminal 5 of the motor→ the body ground, and the motor starts to run in order to retract the headlights.

When the headlights are retracted, the limit switch operates, so that continuity is broken between terminals 2 and 3 of the motor, and continuity is proceeded between terminals 2 and 1.

As a result, because the LRR is interrupted, the headlights stay in position.

6. IGNITION SWITCH TURNED FROM "ON" TO "ACC" OR "LOCK" AND DRIVER'S DOOR OPEN WITH LIGHT CONTROL SWITCH IN "HEAD" (Light Auto Turn Off system)

When the switches are set, current does not flow from the battery to terminal 4 (B–4) of the LRR, and continuity is produced between terminal 15 (B–15) of the LRR and the body ground. Also because continuity is broken between terminals 2 (B–2) of the LRR and the body ground, and 10 (B–1 0) of the LRR and the body ground, the TCR and the HCR –are turned off.

Then the taillights and the headlights go out.

Also with the light control switch in "TAIL", the taillights go out.

When the ignition switch is turned on again, the taillights and headlights light normally.

During light auto turn off operation, if the light switch is turned first to "HOLD" or "OFF", then turned to "TAIL" or "HEAD", both sets of lights will come on again.

DAYTIME RUNNING LIGHT SYSTEM

The Daytime Running Light (DRL) system is activated when engine is started (However, if the parking brake lever is engaged when the engine is started, the DRL will not light up after the engine has started Once the parking brake is released, the DRL will then light up and will remain on regardless of operation of the parking brake lever).

The DRL remain on until the ignition switch is turned off.

(CANADA)

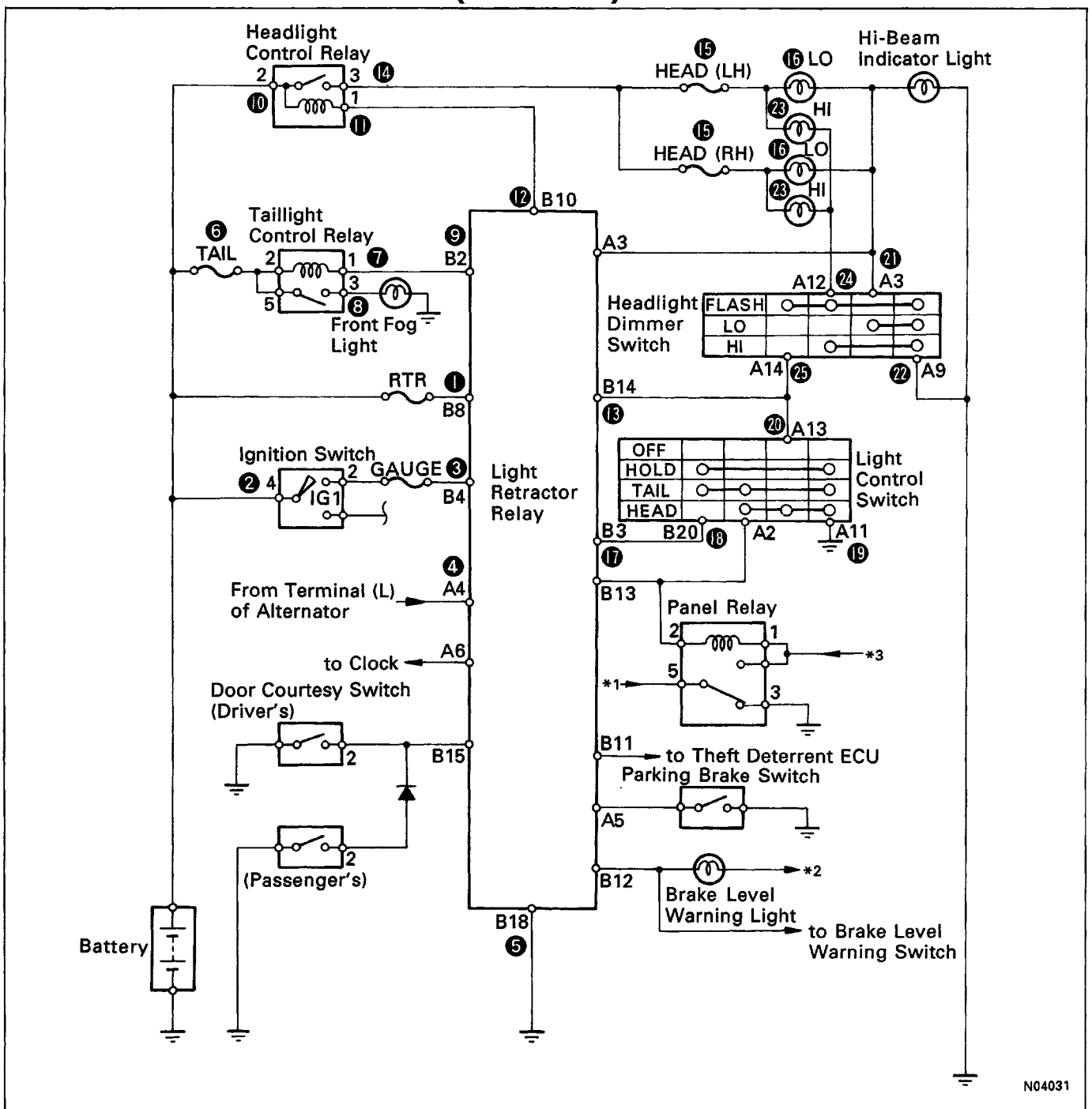

*1 Front Indicator Lights (Light Control Switch: TAIL or HEAD to Illumination (Light Control Switch: OFF)
*2 from GAUGE Fuse
*3 from Terminal 3 of Taillight Control Relay

The POWER SOURCE CIRCUIT has been simplified. For full details, see page BE-9.

OPERATION EXAMPLE (CURRENT FLOW TABLE
1. DAYTIME RUNNING LIGHT LIGHTS UP

Switch	Position
Ignition Switch	*ON
Light Control Switch	OFF
Headlight Dimmer Switch	LO or HI
*1 Door Courtesy Switch	ON

with Engine Running

Condition: Battery voltage → ❶, Battery voltage → ❷ → ❸, Battery voltage → ❹
Continuity: ❺ → Ground

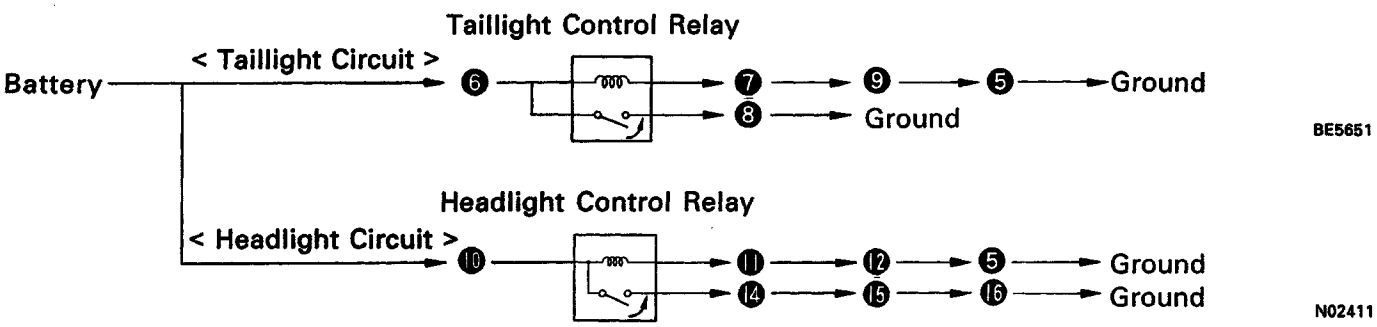

2. TAILLIGHT LIGHTS UP

Switch	Position
Ignition Switch	OFF* or ON
Light Control Switch	TAIL
Headlight Dimmer Switch	LO or HI
*1 Door Courtesy Switch	ON

* with Engine Running

Condition: Battery voltage → ❶, *(Battery voltage → ❷ → ❸, Battery voltage → ❹)
Continuity: ❺ → Ground

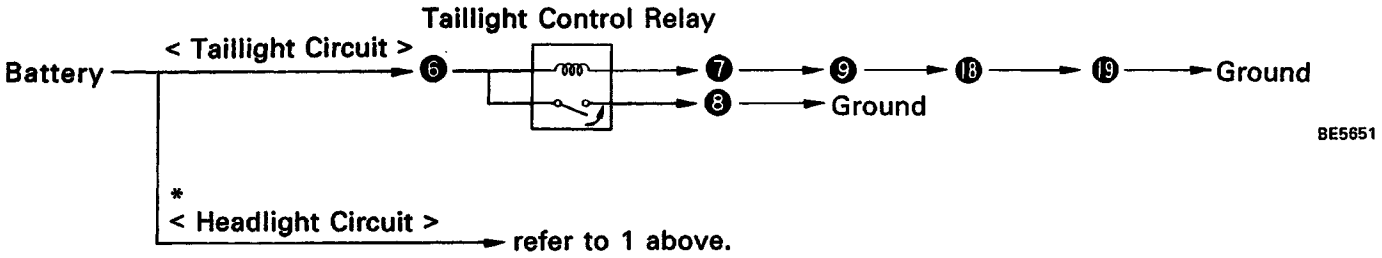

3. HEADLIGHT LOW BEAM LIGHTS UP

Switch	Position
Ignition Switch	OFF* or ON
Light Control Switch	HEAD
Headlight Dimmer Switch	LO
*1 Door Courtesy Switch	ON

with Engine Running

Condition: Battery voltage ⟶ ❶, *(Battery voltage ⟶ ❷ ⟶ ❸, Battery voltage ⟶ ❹)
Continuity: ❺ ⟶ Ground

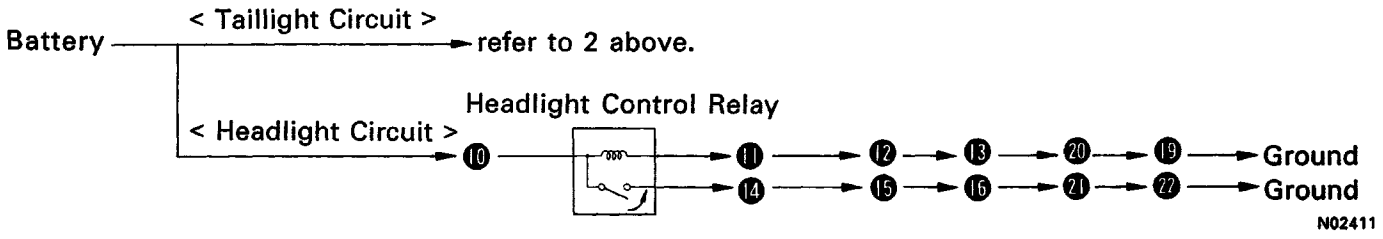

4. HEADLIGHT HIGH BEAM LIGHT UP

Switch	Position
Ignition Switch	OFF or *ON
Light Control Switch	HEAD
Headlight Dimmer Switch	HI
*1 Door Courtesy Switch	ON

with Engine Running

Condition: Battery voltage ⟶ ❶, *(Battery voltage ⟶ ❷ ⟶ ❸, Battery voltage ⟶ ❹)
Continuity: ❺ ⟶ Ground

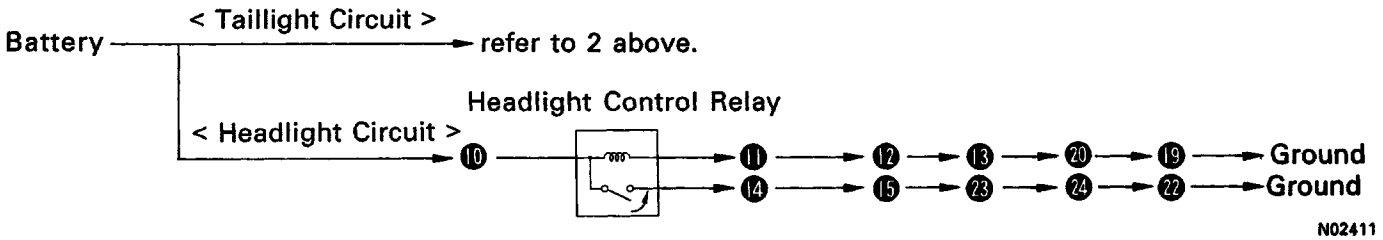

5. HEADLIGHT FLASH

Switch	Position
Ignition Switch	OFF or *ON
Light Control Switch	OFF or TAIL or HEAD
Headlight Dimmer Switch	Flash
*1 Door Courtesy Switch	0 N

with Engine Running

Condition: Battery voltage → ❶, *(Battery voltage → ❷ → ❸, Battery voltage → ❹)
Continuity: ❺ → Ground

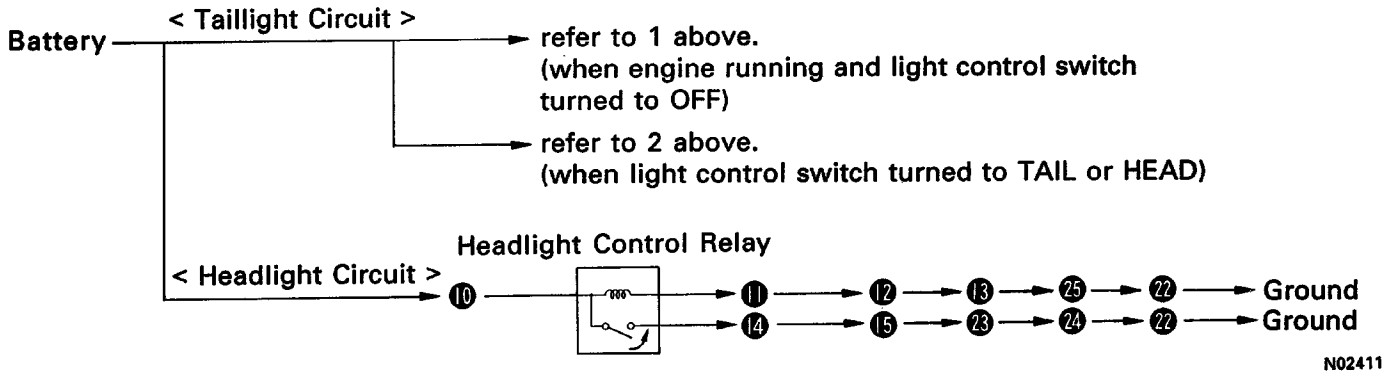

HEADLIGHT

HEADLIGHT AIMING ADJUSTMENT

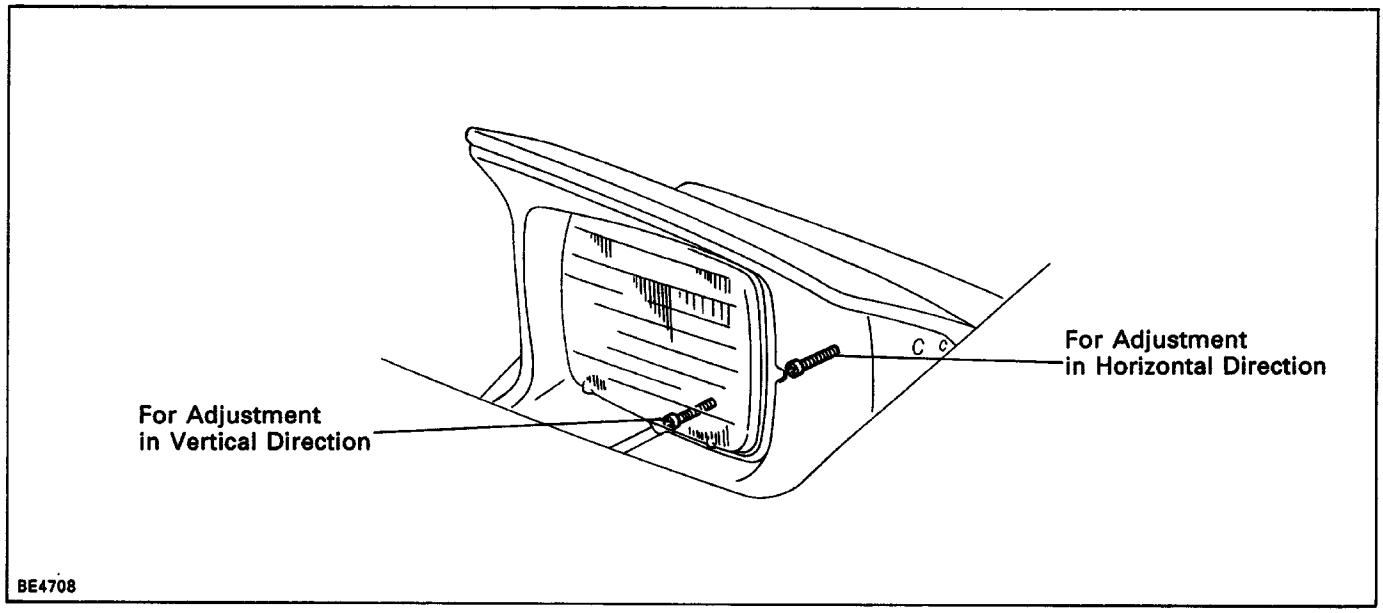

TROUBLESHOOTING

You will find the troubles easier using the table well shown below. In this table, each number shows the priority of causes in troubles. Check each part in order. If necessary, replace these parts.

	See page	BE–3	BE–3	BE–3	BE–3	BE–3	BE–30	BE–30	BE–30	BE–30	BE–11	BE–49	BE–33	BE–34	–	–	–
	Pa its name	MAIN FL	RTR Fuse	GAUGE Fuse	HEAD Fuse	TAIL Fuse	Light Control Switch	Dimmer Switch	Headlight Control Relay	Taillight Control Relay	Ignition Switch	Door Courtesy Switch	Light Retractor Relay	Light Retractor Motor	Wire Harness	Headlight Bulb*	Taillight Bulb
	Trouble																
Headlight	Headlight does not light up. (Taillight is normal.)	1			2		3	4							5	6	
	Headlight does not light up. (Taillight does not light up.)						1	2							3	4	
	Only one light comes ON.				1										2	3	
	"Lo–Beam" does not light up.							3	1				2		4	5	
	"Hi–Beam" does not light up.							3	1				2		4	5	
	"Flash" does not light up.							3	1				2		4	5	
	Light Retractable System does not operate						2	3	4				6	5	7	8	
Taillight	Taillight does not light up. (Headlight does not light up.)	1				2	3								4	5	
	Taillight does not light up. (Headlight does not light up.)					1	2			3					4		5
	Only one light goes out or does not light up.														1		2
	Rear Combination light does not light up.					1									2		3
Daytime running light system does not operate.							4	5	1	2			3		6		
Light Auto Turn Off does not operate.				1							2	3	4		5		

* Sculptured Type: If operation is not as specified, replace the Headlight Bulb.
Rectangular Type: If operation is not as specified, replace the Headlight Assembly.

COMBINATION SWITCH

COMPONENTS

(A Type)

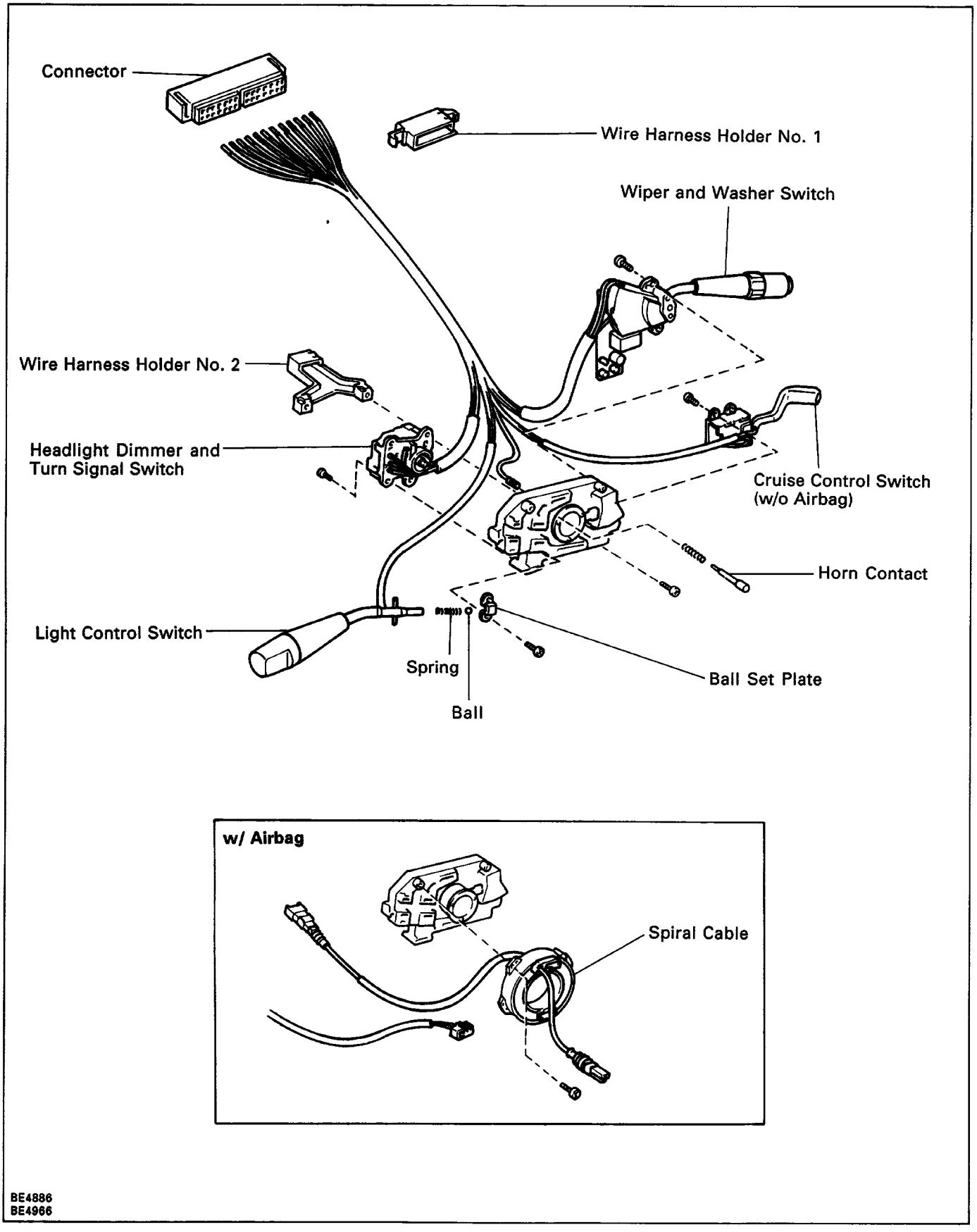

(B Type)

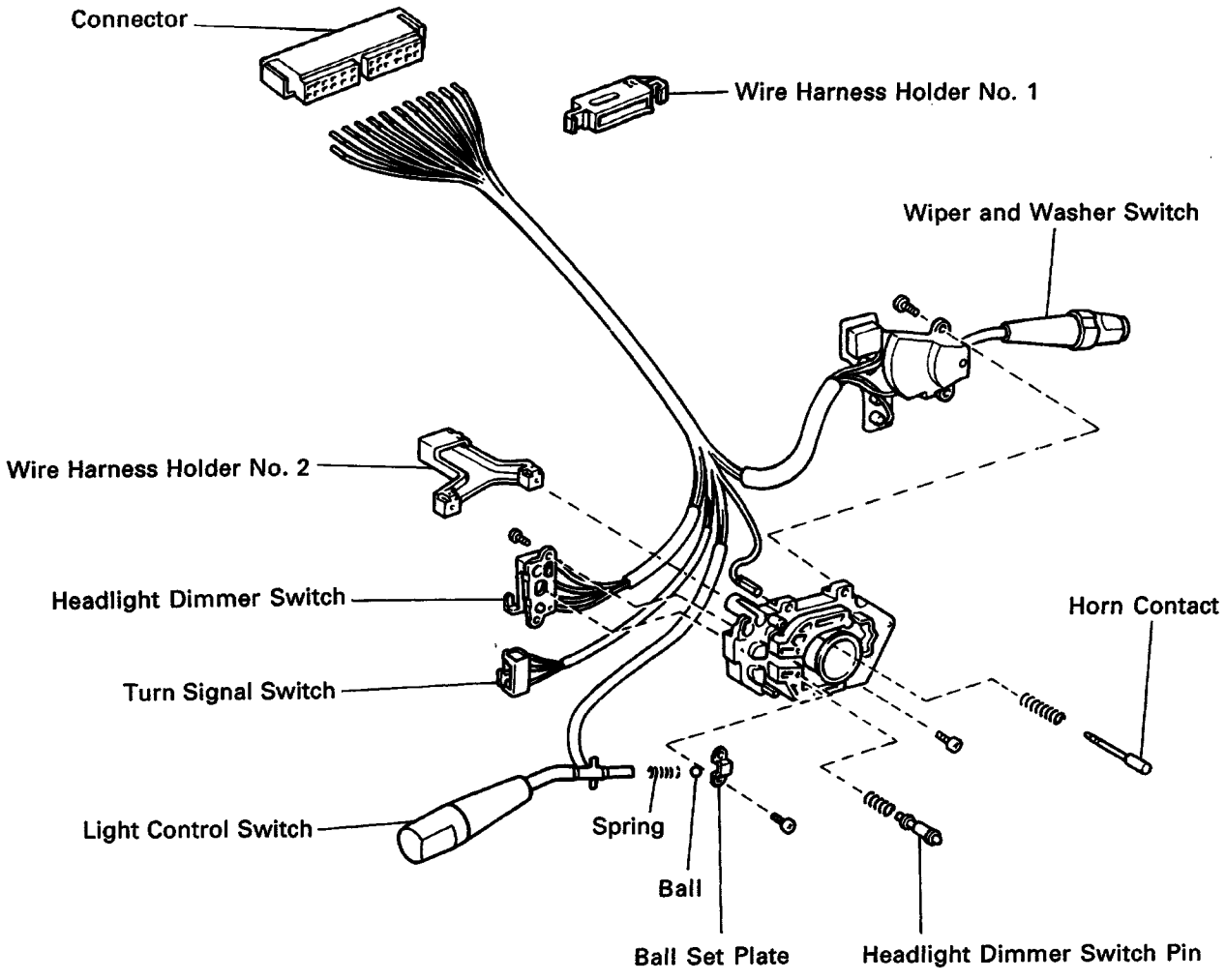

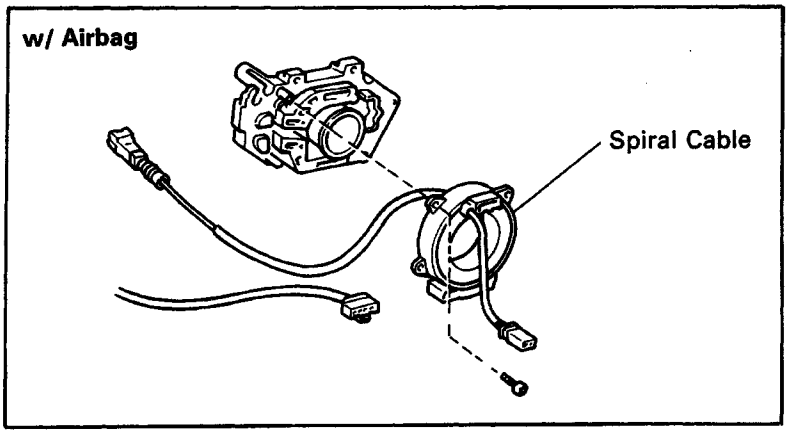

BE4372
BE4967

COMBINATION SWITCH DISASSEMBLY

1. REMOVE WIRE HARNESS HOLDER NO. 1

2. REMOVE WIRE HARNESS HOLDER NO. 2

3. 1w/Airbag)

REMOVE SPIRAL CABLE SUBASSEMBLY

(a) Remove the four screws.

(b) Disconnect the connector and remove the spiral cable subassembly.

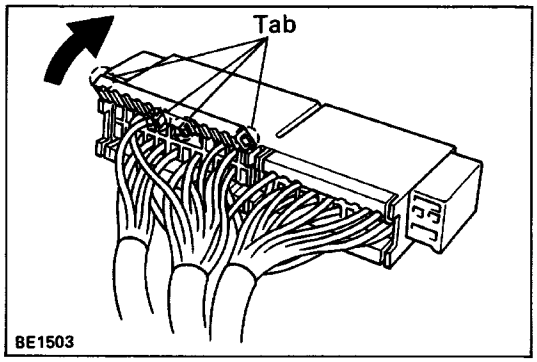

4. REMOVE TERMINALS FROM CONNECTOR

(a) Release four tabs and open the terminal cover.

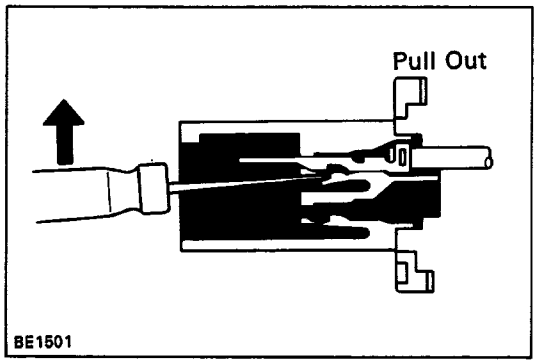

(b) From the open end, insert a miniature screwdriver between the locking lug and terminal.

(c) Pry down the locking lug with the screwdriver and pull the terminal out from the rear.

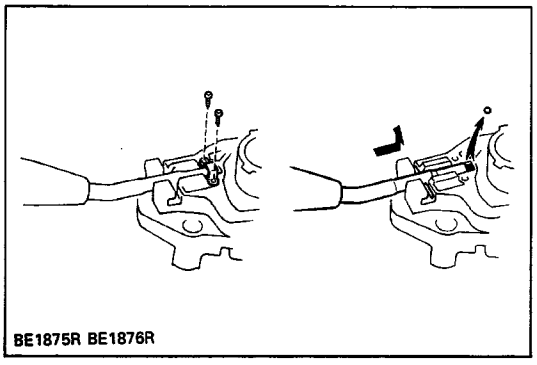

5. REMOVE LIGHT CONTROL SWITCH

(a) Remove two screws and the ball set plate from the switch body.

(b) Remove the ball and slide out the switch from the switch body with the spring.

6. REMOVE HEADLIGHT DIMMER AND TURN SIGNAL SWITCH

(A Type)

Remove four screws and the switch from the switch body.

(B Type)

(a) Pry loose two locking lugs and remove the turn signal switch from the switch body.

(b) Remove two screws and the headlight dimmer switch from the switch body.

(c) Remove the headlight dimmer switch pin from the switch body with the spring.

7. REMOVE WIPER AND WASHER SWITCH

Remove two screws and the switch from the switch body.

8. (A Type)
REMOVE CRUISE CONTROL SWITCH

Remove two screws and the switch from the body.

9. REMOVE HORN CONTACT

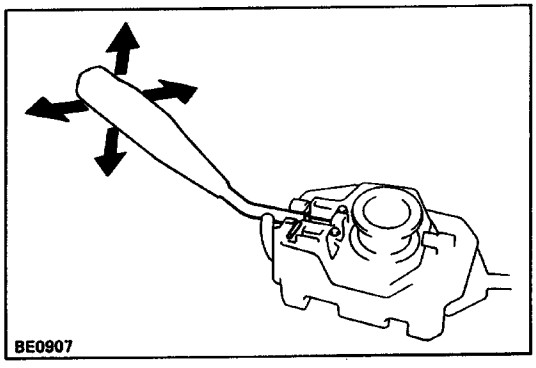

COMBINATION SWITCH ASSEMBLY

INSTALL PARTS OF COMBINATION SWITCH IN REVERSE SEQUENCE OF DISASSEMBLY

HINT:

- After installing the light control switch to the switch body, insure that the switch operation is smoothly.

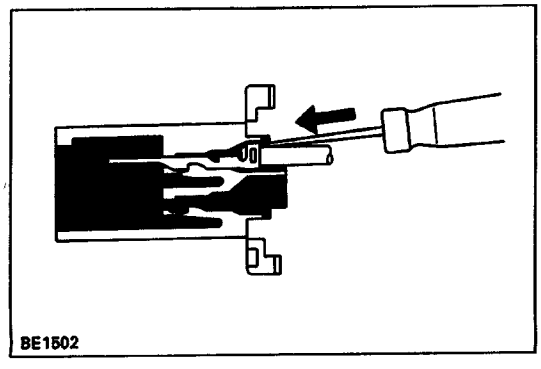

- Push in the terminal until it is securely locked in the connector lug.

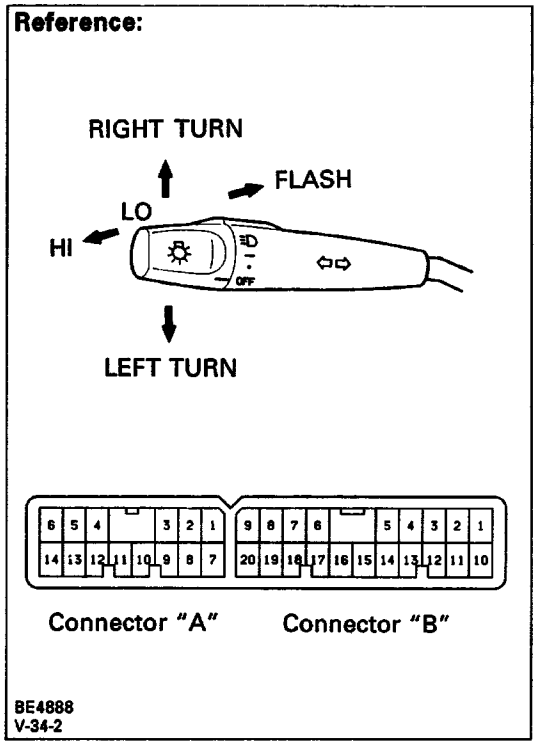

COMBINATION SWITCH INSPECTION

LIGHT CONTROL SWITCH CONTINUITY

Terminal (Color) / Switch position	A–2	A–11	A–13	B–20
OFF				
HOLD (•)		○		○
TAIL (–)	○	○		○
HEAD	○	○	○	

HEADLIGHT DIMMER SWITCH CONTINUITY

Terminal (Color) / Switch position	A–3	A–9	A–12	A–14
Flash		○	○	○
Low beam	○	○		
High beam		○	○	

TURN SIGNAL SWITCH CONTINUITY

Terminal (Color) / Switch position	A–1	A–5	A-8
Left turn	○	○	
Neutral			
Right turn	○		○

If continuity is not as specified, replace the switch.

HEADLIGHT CONTROL RELAY

HEADLIGHT CONTROL RELAY INSPECTION

CONTINUITY

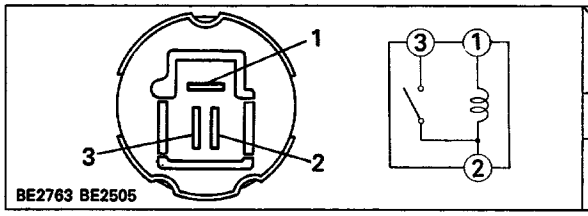

Terminal / Condition	1	2	3
Constant	○ ∿∿ ○		
Apply battery voltage to terminals 1 and 2.		○	○

If continuity is not as specified, replace the relay.

TAILLIGHT CONTROL RELAY

TAILLIGHT CONTROL RELAY INSPECTION

CONTINUITY

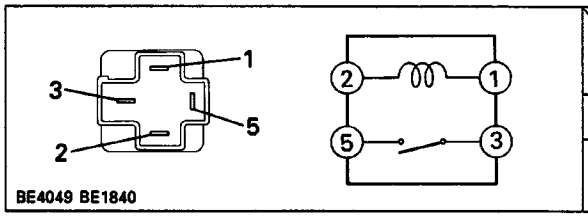

Terminal / Condition	1	2	3	5
Constant	○ ∿∿ ○			
Apply battery voltage to terminals 1 and 2.			○	○

If continuity is not as specified, replace the relay.

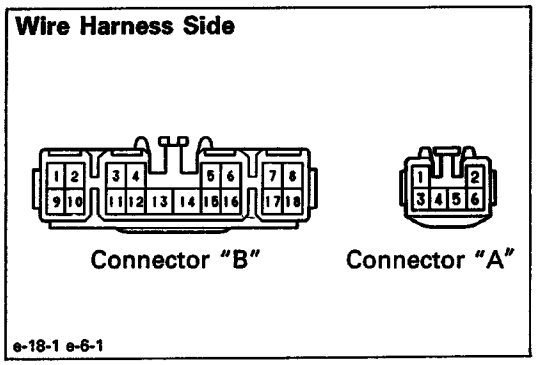

DAYTIME RUNNING LIGHT SYSTEM

LIGHT RETRACTOR RELAY INSPECTION

RELAY CIRCUIT

Disconnect the connector from the relay and inspect the connector on the wire harness side as shown in the chart.

Check for	Tester connection	Condition		Specified value
Continuity	B-3 — Ground	Light control switch position	OFF or HOLD	No continuity
			HOLD or TAIL	Continuity
	A-5 — Ground	Parking brake switch position	OFF (Parking brake lever released)	No continuity
			ON (Parking brake lever engaged)	Continuity
	B-13 — Ground	Light control switch position	OFF or HOLD	No continuity
			TAIL o r HEAD	Continuity
	B-14 — Ground	Light control switch position: OFF, HOLD or TAIL		
		Headlight dimmer switch position	Low beam or High beam	No continuity
			Flash	Continuity
		Light control switch position: HEAD		Continuity
	B-18 — Ground	Constant		Continuity
Voltage	A-3 — Ground	Light control switch HEAD and Dimmer switch LO		No voltage
		Light control switch HEAD and Dimmer switch HI		Battery voltage
	A-4 — Ground	Engine	Stop	No voltage
			Running	Battery voltage
	A-12 — Ground	Constant		Battery voltage
	B-2 — Ground	Constant		Battery voltage
	B-4 — Ground	Ignition switch position	LOCK or ACC	No voltage
			O N o r START	Battery voltage
	B-8 — Ground	Constant		Battery voltage
	B-10 — Ground	Constant		Battery voltage

If circuit is as specified, inspect relay operation.

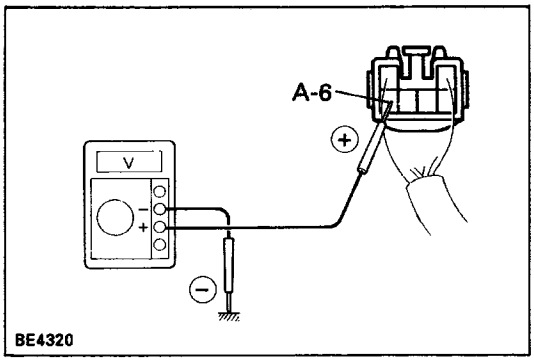

RELAY OPERATION

(a) Connect the positive W lead from the voltmeter to terminal A–6 and negative (–) lead to the ground.

(b) Check that there is battery voltage with light control switch is turned on.

If operation is not as specified, replace the relay.

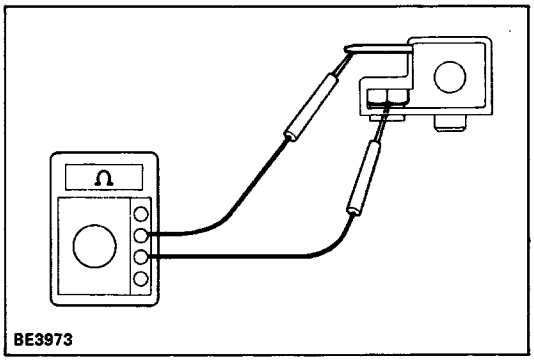

PARKING BRAKE SWITCH

PARKING BRAKE SWITCH INSPECTION

INSPECT PARKING BRAKE

(a) Check that there is continuity between terminals with the switch ON (switch pin released).

(b) Check that there is no continuity between terminals with the switch OFF (switch pin pushed in).

If operation is not as specified, replace the switch.

PANEL RELAY

PANEL RELAY INSPECTION

CONTINUITY

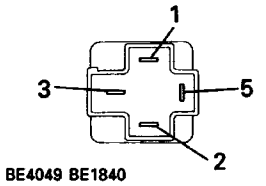

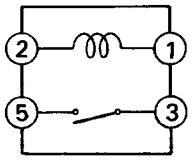

Terminal / Condition	1	2	3	5
Consistent	○—∿∿∿—○			
Apply battery voltage to terminals 1 and 2.			○—○	

If continuity is not as specified, replace the relay.

LIGHT RETRACTABLE SYSTEM

LIGHT RETRACTOR RELAY INSPECTION

RELAY CIRCUIT

Disconnect the connector from the relay and inspect the connector on wire harness side as shown in the chart.

Wire Harness Side

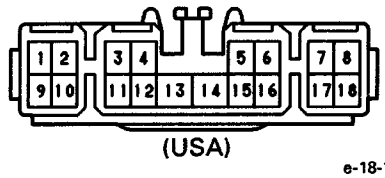

(USA)

e-18-1



e-6-1

Connector "A"

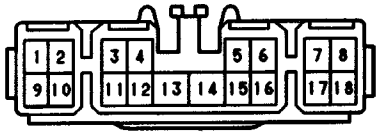

e-18-1

Connector "B"

(CANADA)

Check for	Tester connection	Condition		Specified value
Continuity	3 (B-3) – Ground	Light control switch position	OFF or HEAD	No continuity
			HOLD or TAIL	Continuity
	6 (B-6) – Ground 16 (B-16) – Ground	Constant		*1 Continuity
	13 (B-13) – Ground	Light control switch position	OFF or HOLD	No continuity
			TAIL or HEAD	Continuity
	14 (B-14) – Ground	Light control switch position: OFF, HOLD or– TAIL		
		Headlight dimmer switch position	Low beam or High beam	No continuity
			Flash	Continuity
		Light control switch position: HEAD		Continuity
	18 (B-18) – Ground	Constant		Continuity
	*2 5 (B-5) – 1 (B-1)	Headlight position	Any position ex. lowermost	Continuity
	*2 7 (B-7) – 1 (B-1)		Lowermost	No continuity
	*2 5 (B-5) – 9 (B-9)	Headlight position	Any position ex. uppermost	Continuity
	7 (B-7) – 9 (B-9)		Uppermost	No continuity

Check for	Tester connection	Condition		Specified value
Voltage	2 (B–2) – Ground	Constant		Battery voltage
	4 (B–4) – Ground	Ignition switch position	LOCK or ACC	No voltage
			ON	Battery voltage
	8 (B–8) – Ground	Constant		Battery voltage
	10 (B–10) – Ground	Constant		Battery voltage
	15 (6–15) – Ground	Door– position	Closed (Courtesy switch OFF)	Battery voltage
			Opened (Courtesy switch ON)	No voltage

The number in ( ) mean for CANADA vehicle.
*1: There is resistance because this circuit is grounded through the motor.
: Connect the test leads so that the current from the ohmmeter can flow according to the above orders.

If circuit is as specified, replace the relay.

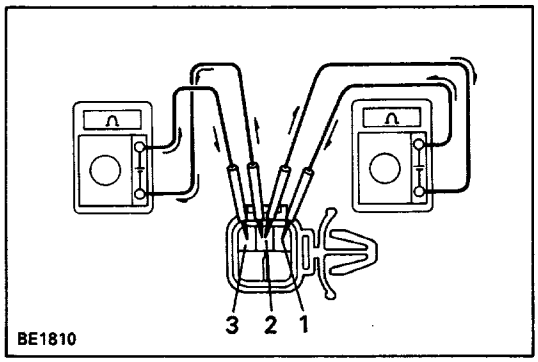

LIGHT RETRACTOR MOTOR

LIGHT RETRACTOR MOTOR INSPECTION

DIODE CONTINUITY

(a) Set the motor to any position except the uppermost or lowermost position.

(b) Connect the ohmmeter test lead so that the current from the meter can flow from terminal 1 to 2, check that there is no continuity.

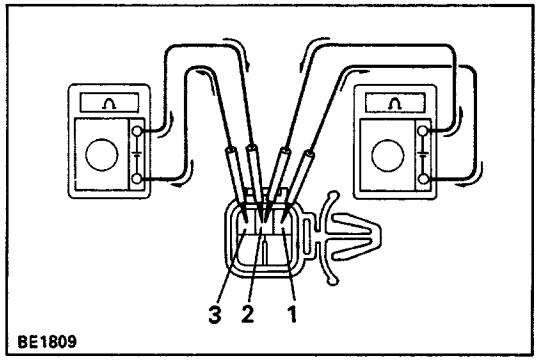

(c) Connect the ohmmeter test lead so that the current from the meter can flow from terminal 3 to 2, check that there is no continuity.

(d) Reverse the test leads of ohmmeter, check that there is continuity.

If continuity is not as specified, replace the motor.

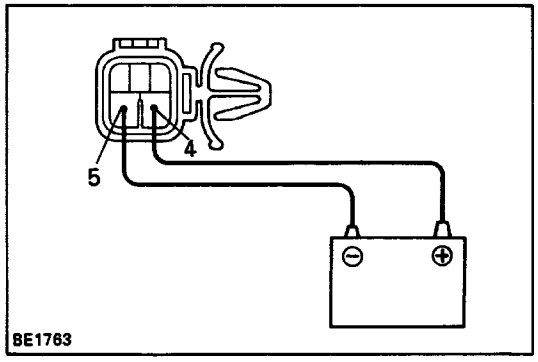

OPERATION

Connect the positive W lead from the battery to ter–minal 4 and the negative (–) lead to terminal 5, check that the motor operates.

If operation is not as specified, replace the motor.

IGNITION SWITCH

PARTS LOCATION

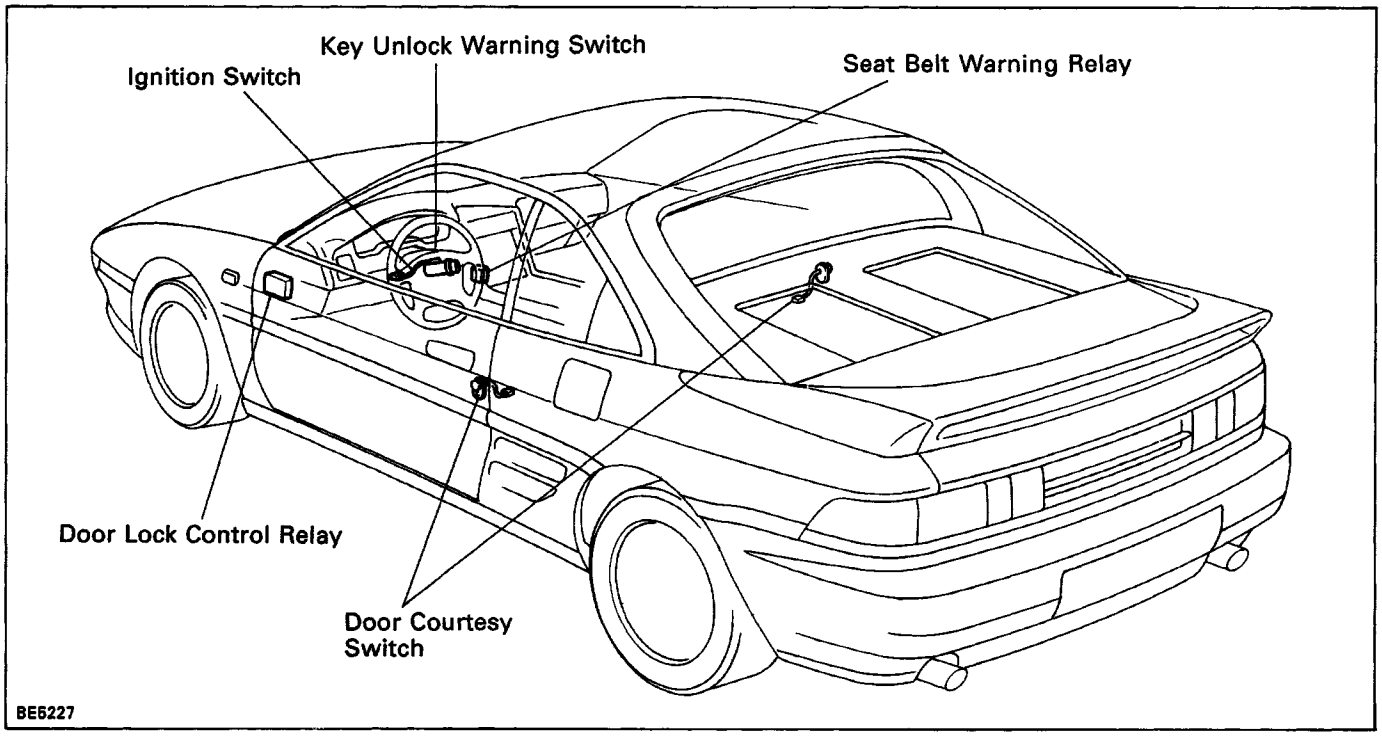

WIRING DIAGRAM

IGNITION SWITCH

See Power Source Section on page BE–9.

KEY CONFINE PREVENTION SYSTEM

See Power Door Lock Control System on page BE–96.

KEY UNLOCK WARNING SYSTEM

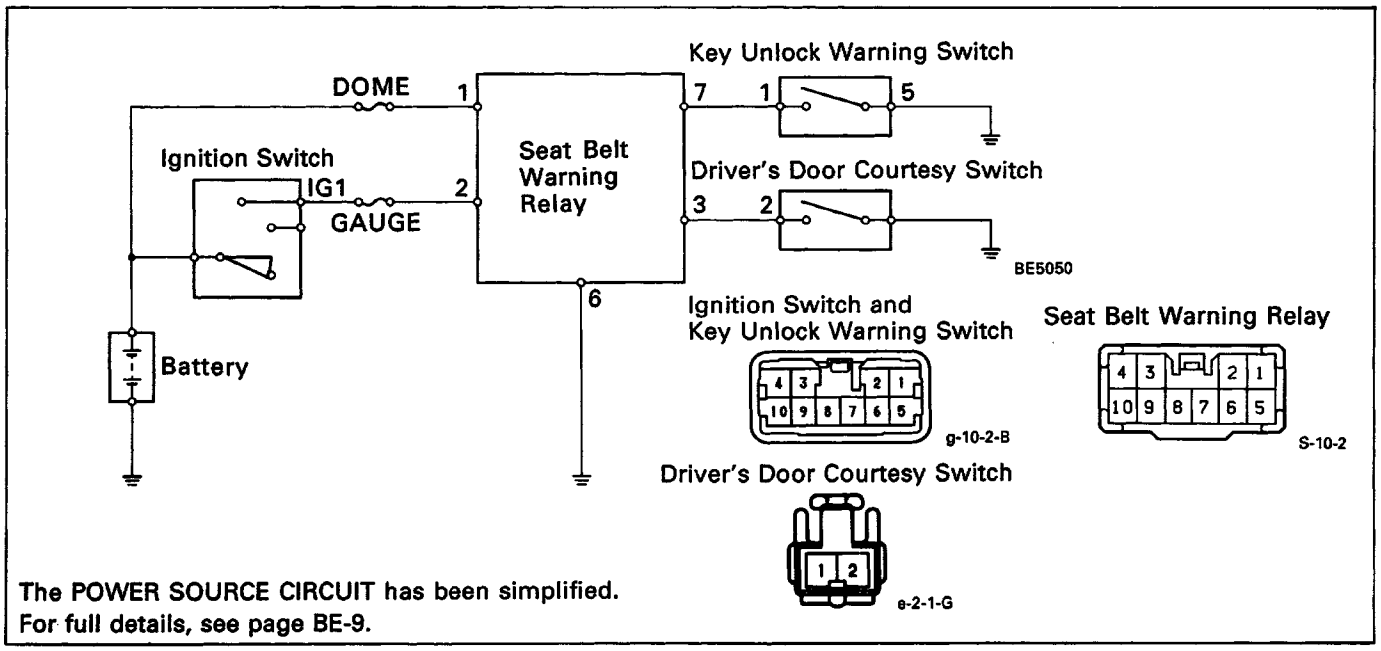

TROUBLESHOOTING

Problem	Possible cause	Remedy	Page
Ignition switch is not seat to each position	Ignition switch faulty Power source circuit faulty	Check switch Repair as necessary	BE–1 1 BE–9
Key confine prevention system does not operate	Key unlock warning switch faulty Door courtesy switch faulty Door lock control relay faulty Wiring faulty	Check switch Check switch Check relay Repair– as necessary	BE–1 1 BE–49 BE–1 02
Key unlock warning system does not operate	Key unlock warning switch faulty Door courtesy switch faulty Seat Belt Warning Relay faulty Wiring faulty	Check switch Check switch Check relay Repair as necessary	BE–1 1 BE–49 BE–12

IGNITION SYSTEM

IGNITION SWITCH INSPECTION

CONTINUITY

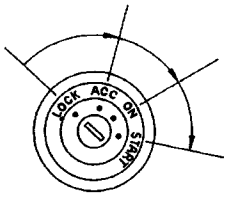

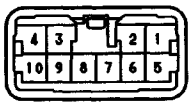

BE0900 g-10-2-B

Terminal / Switch position	2 1G1	3 ACC	4 AM 1	6 ST2	7 ST1	9 IG2	10 AM2
LOCK							
ACC		○—○	○—○				
ON	○—○	○—○	○—○			○—○	○—○
START	○—○		○—○	○—○	○—○	○—○	○—○

If continuity is not as specified, replace the switch.

KEY CONFINE PREVENTION SYSTEM

KEY UNLOCK WARNING SWITCH INSPECTION

CONTINUITY

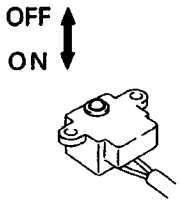

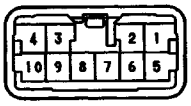

BE2193 g-10-2-B

Terminal / Switch position	1	5
OFF (ignition Key removed)		
ON (Ignition Key set)	○——	——○

If continuity is not as specified, replace the switch.

DOOR COURTESY SWITCH

DOOR COURTESY SWITCH INSPECTION

See page BE–49.

DOOR LOCK CONTROL RELAY

DOOR LOCK CONTROL RELAY INSPECTION

See page BE–102.

KEY UNLOCK WARNING SYSTEM

KEY UNLOCK WARNING SWITCH INSPECTION

See page BE–11**.**

DOOR COURTESY SWITCH INSPECTION

See page BE–49.

SEAT BELT WARNING RELAY INSPECTION

See page BE–80.

INTERIOR LIGHT SYSTEM

PARTS LOCATION

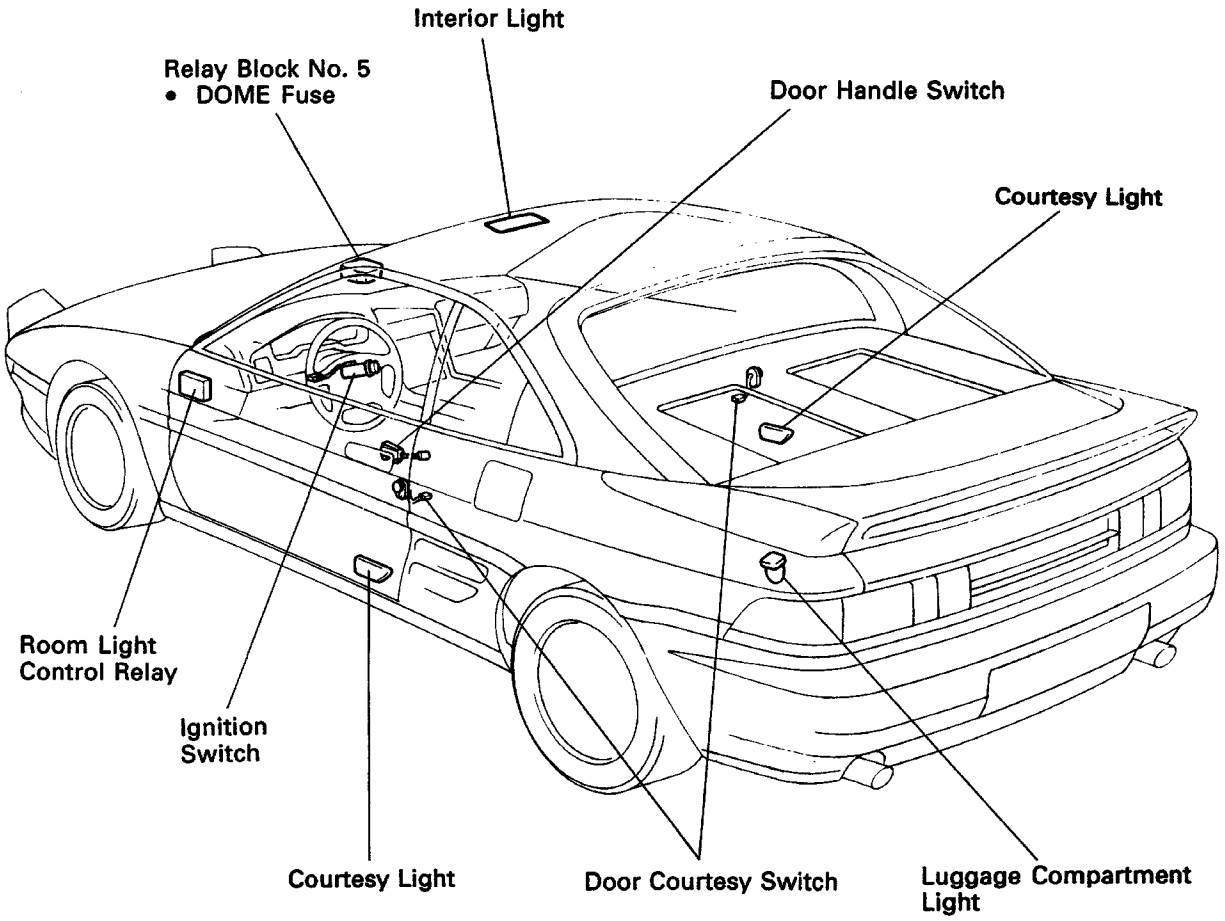

N04039

WIRING AND CONNECTOR DIAGRAMS

ILLUMINATED ENTRY SYSTEM

w/o Door Key Cylinder Illumination Light

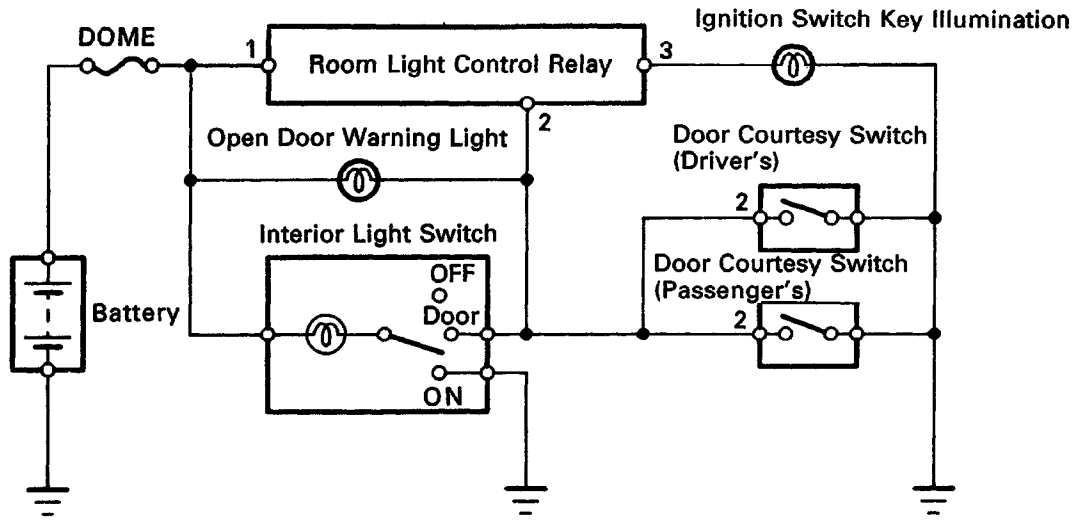

BE4664

The POWER SOURCE CIRCUIT has been simplified. For full details, see page BE-9.

w/ Door Key Cylinder Illumination Light

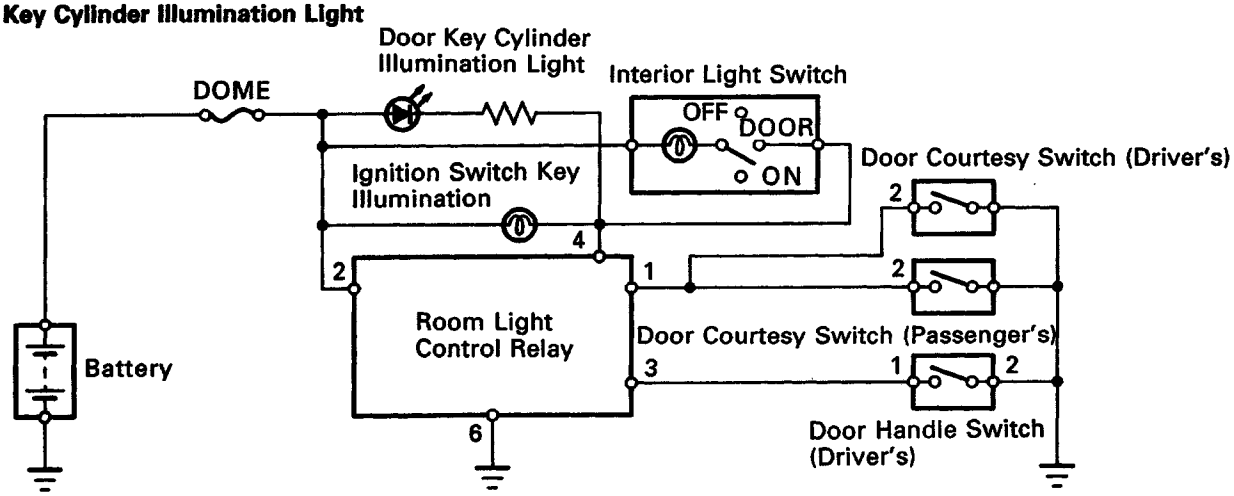

BE5055

The POWER SOURCE CIRCUIT has been simplified. For full details, see page BE-9.

Room Light Control Relay

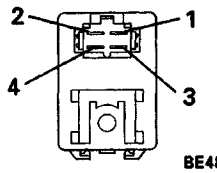

BE4851

(w/o Door Key Cylinder Illumination Light)

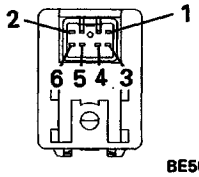

BE5056

(w/ Door Key Cylinder Illumination Light)

Door Courtesy Switch



e-2-1-G

Door Handle Switch



IY-2-1-A

TROUBLESHOOTING

You will find the cause of trouble more easily using the table shown below. In this table, the numbers indicate the order priority of the causes in trouble. Check each part in the order shown. If necessary, replace the parts.

See page / Part name / Trouble	BE–3	BE–49	BE–49	BE–50	BE–49	I	I
	DOME Fuse	Door Courtesy Switch	Door Outside Handle Switch	Room Light Control Relay	Interior Light Switch	Wire Harness	Bulb
Only one interior light does not light up.						2	1
Interior light does not light up. (All)	1					2	
”Illuminated Entry System” does not operate.		2	3	1		4	
Interior light does not light up. (in front personal light)					2	3	

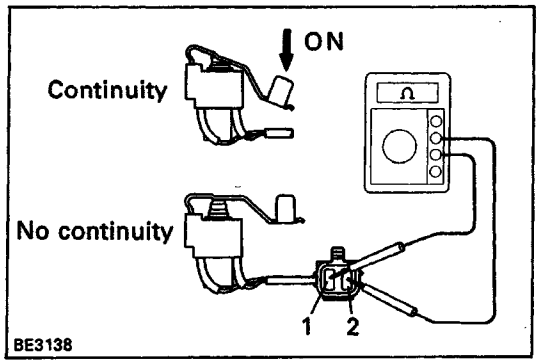

DOOR OUTSIDE HANDLE SWITCH

DOOR OUTSIDE HANDLE SWITCH INSPECTION

CONTINUITY

(a) Check that there is continuity between terminals 1 and 2 when door outside handle is pulled.

(b) Check that there is no continuity between terminals 1 and 2 when door outside handle is released.

DOOR COURTESY SWITCH

DOOR COURTESY SWITCH INSPECTION

CONTINUITY

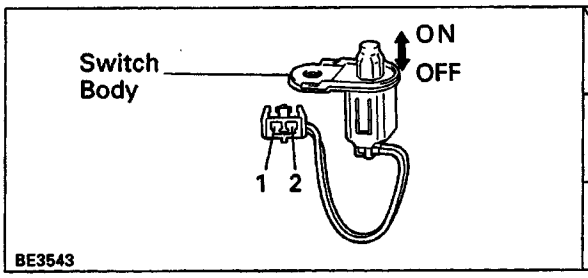

Terminal / Switch position	1	2	Switch body
ON (Switch pin released)	○	○	○
		○	○
OFF (Switch pin pushed in)			

If continuity is not as specified, replace the switch.

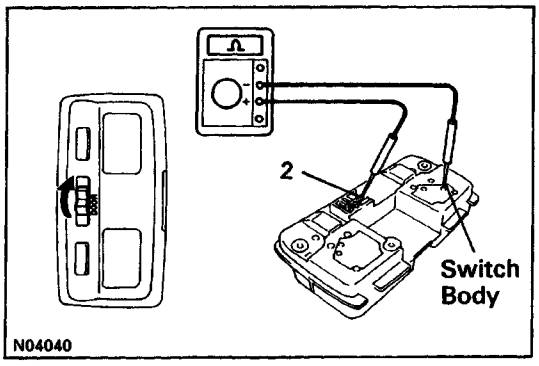

INTERIOR LIGHT SWITCH

INTERIOR LIGHT SWITCH INSPECTION

(a) Disconnect the connector from interior light assembly.

(b) Turn the interior light switch DOOR, check that there is continuity between terminal switch body and 2.

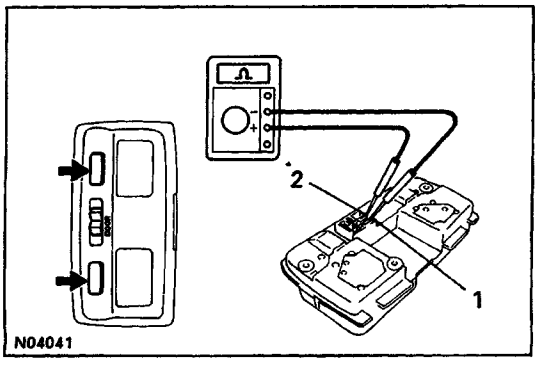

(c) Turn the interior light switch OFF.

(d) Push the interior light switch ON, check that there is continuity between terminal 1 and 2.

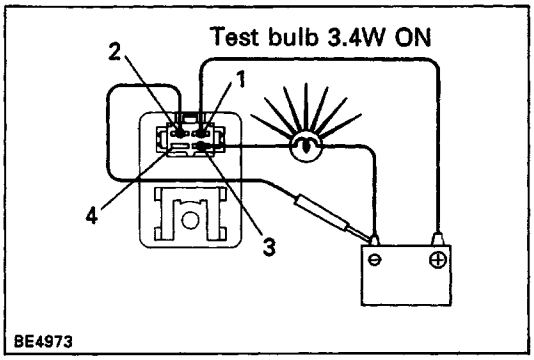

ROOM LIGHT CONTROL RELAY

ROOM LIGHT CONTROL RELAY INSPECTION

OPERATION

(w/o Door Key Illumination Light)

Connect the positive (+) lead from the battery to terminal 1. Connect the negative (–) lead to terminal 2. Connect a 3.4 W test bulb between terminal 3 and the negative (–) lead.

(a) Check that the bulb lights.

(b) Disconnect the negative (–) lead from the battery and check that the bulb goes out 5 seconds later. If operation is not as specified, replace the relay.

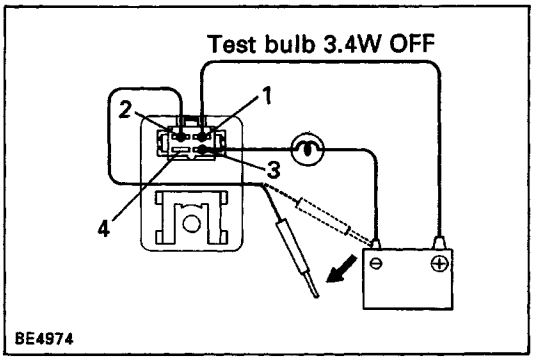

(w/ Door Key Illumination Light)

COURTESY SWITCH CIRCUIT/OPERATION

Connect the positive (+) lead from the battery to terminal 2. Connect the negative H lead to terminals 1 and 6. Connect a 3.4 W test bulb between terminals 2 and 4.

(a) Check that the bulb lights.

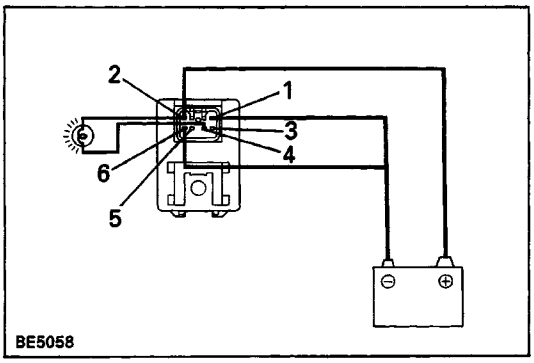

(b) Disconnect the negative (–) lead from terminal 1, and check that the bulb fades out about 8.5 seconds later. If operation is not as specified, replace the relay.

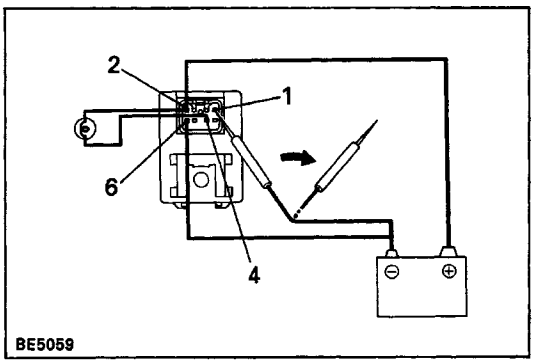

OUTSIDE HANDLE SWITCH CIRCUIT/OPERATION

Connect the positive (+) lead from battery to terminal 2. Connect the negative(–) lead to terminals 3 and6. Connect a 3.4 W test bulb between terminals 2 and 4. Disconnect the negative (–) lead from terminal 3, and check that the bulb fades out about 8.5 seconds later.

If operation is not as specified, replace the relay.

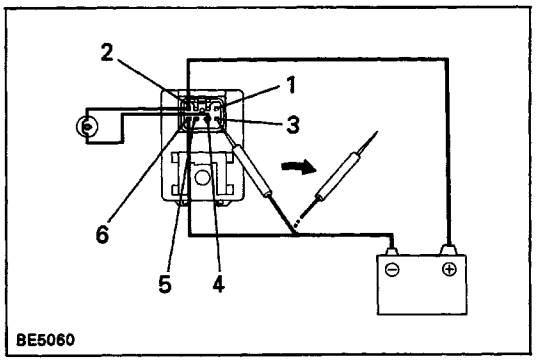

POWER DOOR LOCK CONTROL SYSTEM

PARTS LOCATION

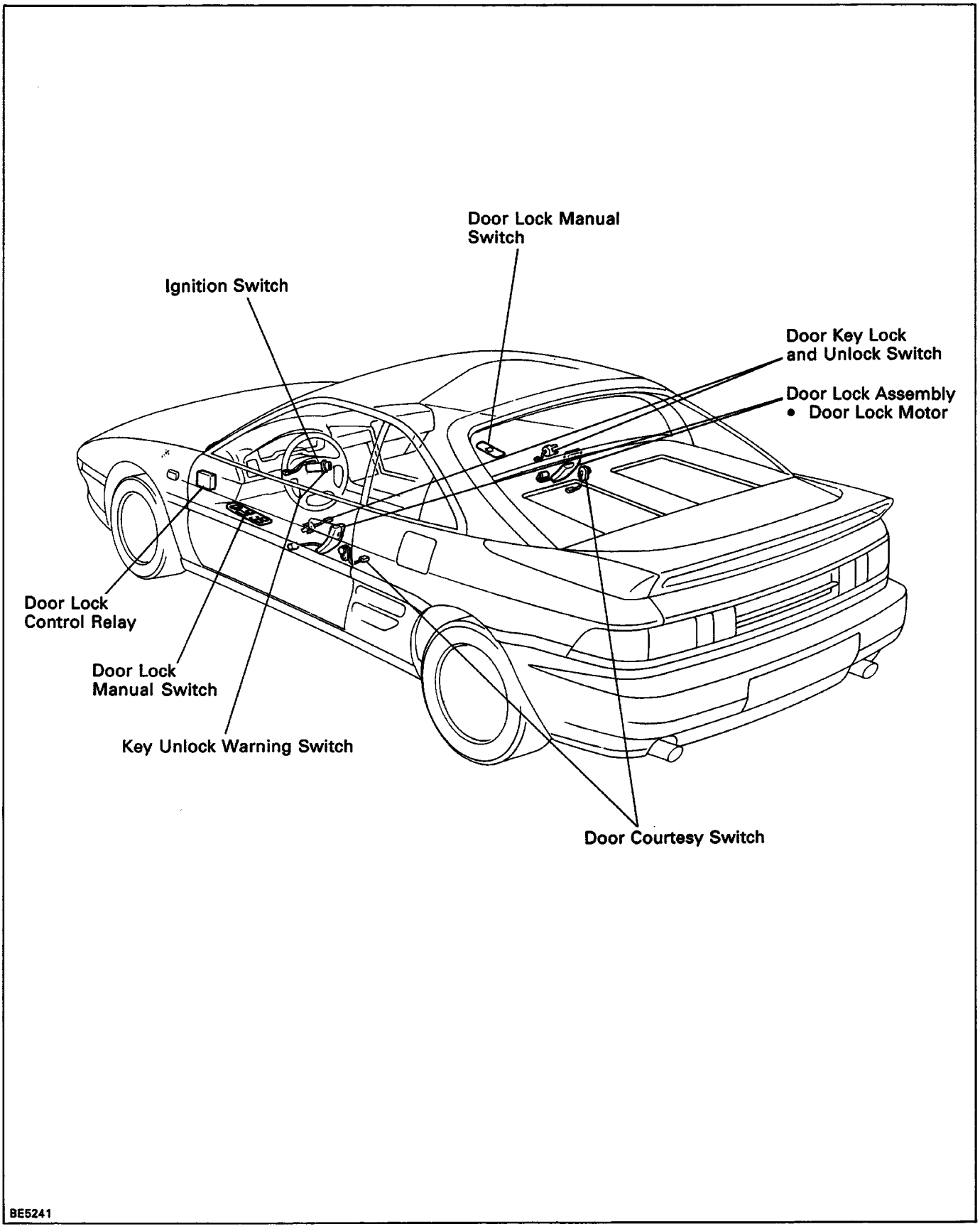

WIRING AND CONNECTOR DIAGRAM

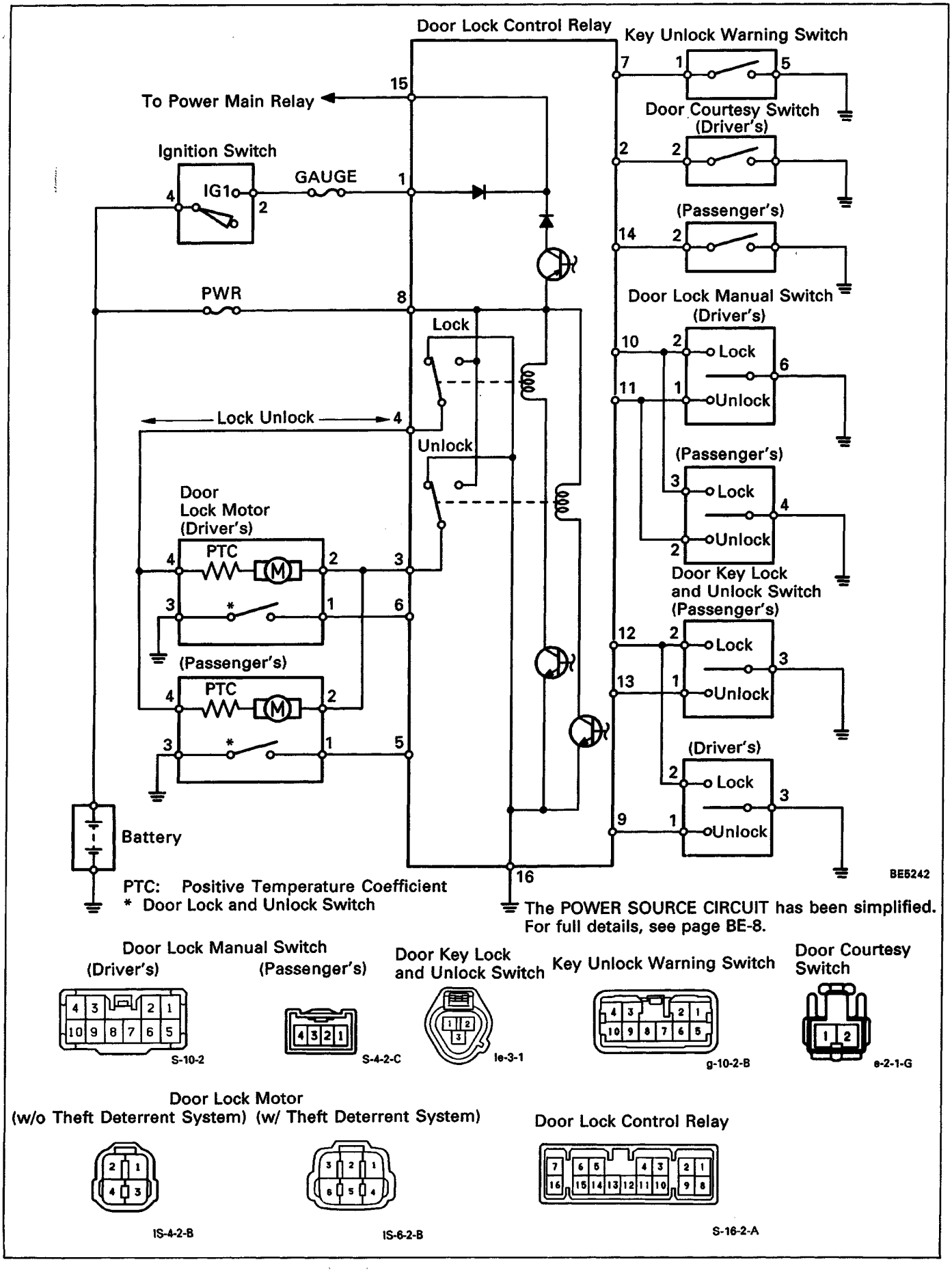

Door Lock Manual Switch (Driver's)

S-10-2

Door Lock Manual Switch (Passenger's)

S-4-2-C

Door Key Lock and Unlock Switch

le-3-1

Key Unlock Warning Switch

g-10-2-B

Door Courtesy Switch

e-2-1-G

Door Lock Motor
(w/o Theft Deterrent System)

IS-4-2-B

(w/ Theft Deterrent System)

IS-6-2-B

Door Lock Control Relay

S-16-2-A

TROUBLESHOOTING

You will find the troubles easier using the table well shown below. In this table, each number shows the priority of causes in troubles. Check each part in order. If necessary, replace these parts.

Trouble \ Part name		P/W Fuse (M–Fuse	RADIO & CIG Fuse	Door Lock Manual Switch	Door Key Lock and Unlock Switch	Door Lock Motor	Key Unlock Warning Switch	Door Courtesy Switch	Door Lock and Unlock Switch	Door Lock Control Relay (Relay Circuit)	Door Lock Control Relay (Door Lock Signal)	Wire Harness	Other Parts
See page		BE–3	BE–3	BE–99	BE–99	BE–100	BE–11	BE–49	BE–101	BE–102	BE–103	–	–
”Door lock control system” does not operate. (All)		4	3							2	1	5	6
Malfunction in Door Lock/Unlock	Using door manual switch			1						3		2	4
	Using door manual switch and key										2	1	3
	Using key				1					3		2	4
Fault in 2–Operation unlock function of Driver’s side door key lock and Unlock switch.					1					3		2	4
Fault in key confine prevention operation.							1	2	3	5		4	6
Only one door lock does not operate.					1							2	

MASTER SWITCH

DRIVER'S DOOR LOCK MANUAL SWITCH INSPECTION

DRIVER'S DOOR LOCK MANUAL SWITCH: IN MASTER SWITCH/CONTINUITY

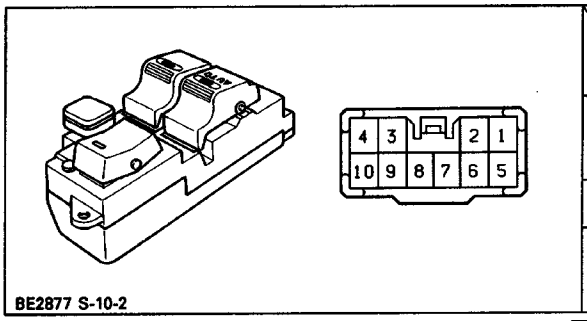

Terminal / Switch position	1	2	5	6
LOCK	○		○	
		○		○
OFF				
UNLOCK	○			○
		○	○	

PASSENGER'S DOOR LOCK MANUAL SWITCH

PASSENGER'S DOOR LOCK MANUAL SWITCH INSPECTION

CONTINUITY

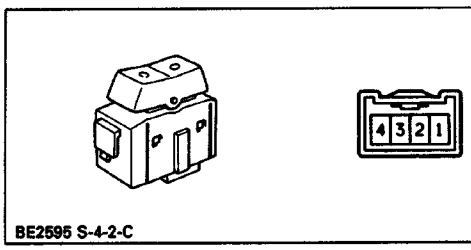

Terminal / Switch position–	2	3	4
LOCK		○	○
OFF			
UNLOCK	○		○

DOOR KEY LOCK AND UNLOCK SWITCH

DOOR KEY LOCK AND UNLOCK SWITCH INSPECTION

CONTINUITY

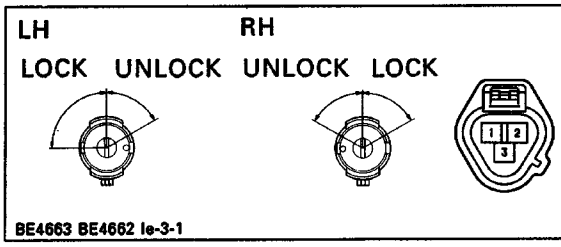

Terminal / Switch position	1	2	3
LOCK		○	○
OFF			
UNLOCK	○		○

If continuity is not as specified, replace the switch.

KEY UNLOCK WARNING SWITCH

KEY UNLOCK WARNING SWITCH INSPECTION

See Key Confine Prevention System on page BE–11.

DOOR COURTESY SWITCH

DOOR COURTESY SWITCH INSPECTION

See Interior Light System .on page BE–49.

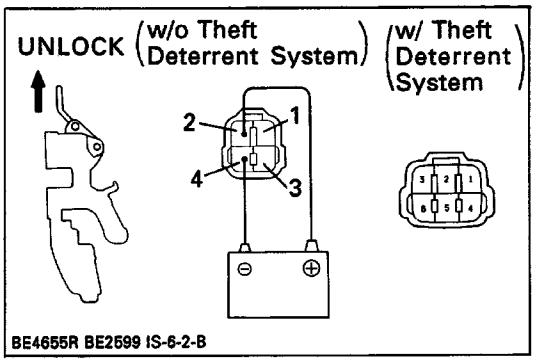

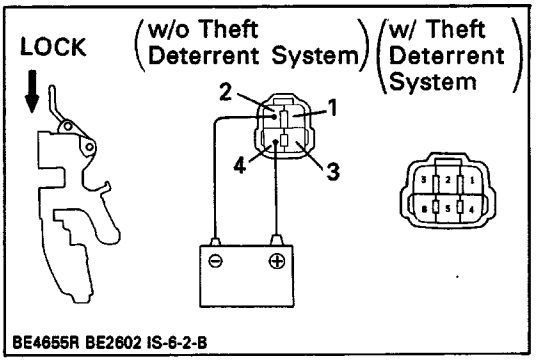

DOOR LOCK MOTOR

DOOR LOCK MOTOR INSPECTION

MOTOR OPERATION

(a) Connect the positive (+) lead from the battery to terminal 2 (2) and the negative (–) lead to terminal 4 (5), check that the door lock link moves to UNLOCK position.

HINT: The number in brackets ( ) applies to vehicles w/ Theft Deterrent System.

(b) Reverse the polarity, check that the door lock link moves to LOCK position.

If operation is not as specified, replace the door lock assembly.

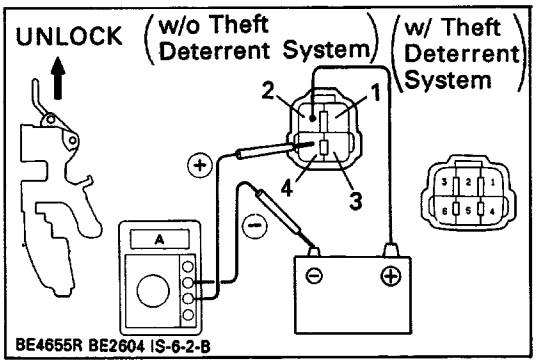

PTC THERMISTER OPERATION

INSPECTION USING AN AMMETER

(a) Connect the positive (+) lead from the battery to terminal 2 (2).

(b) Connect the positive (+) lead from the ammeter to terminal 4 (5) and the negative H lead to battery negative (–) terminal, check that the current changes from approximately 3.2 ampere to less than 0.5 ampere within 10 to 60 seconds.

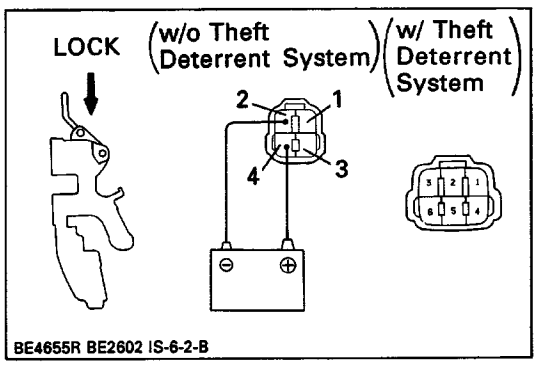

(c) Disconnect the leads from terminals.

(d) Approximately 60 seconds later, connect the positive (+) lead from the battery to terminal 4 (5) and the negative (–) lead to terminal 2 (2), check that the door lock moves to LOCK position.

HINT: The number in brackets ( ) applies to vehicles w/ Theft Deterrent System.

If operation is not as specified, replace the door lock assembly.

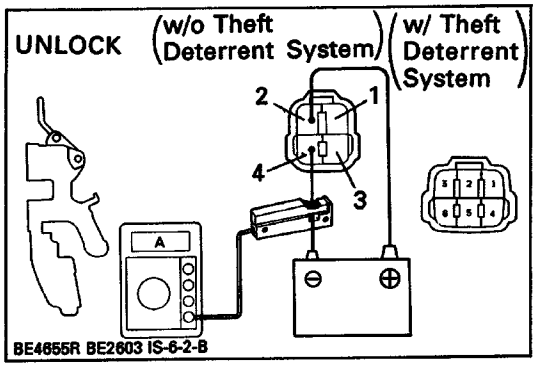

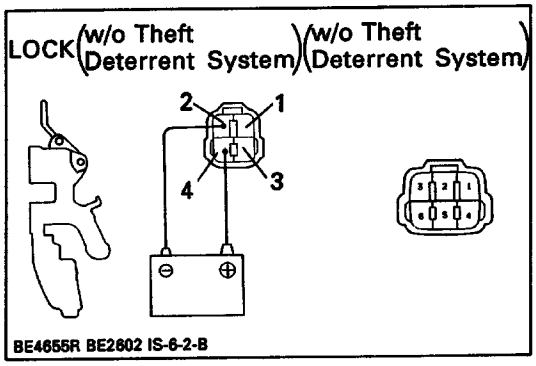

INSPECTION USING AN AMMETER WITH A CURRENT–MEASURING PROBE.

(a) Connect the positive (+) lead from the battery to terminal 2

(2) and the negative H lead to terminal 4 (5).

(b) Attach a current–measuring probe to either the positive (+) lead or the negative (–) lead, check that the current changes from approximately 3.2 ampere to less than 0.5 ampere within 10 to 60 seconds.

HINT: The number in brackets¿) applies to vehicles w/ Theft Deterrent System.

(c) Disconnect the leads from terminals.

(d) Approximately 60 seconds later, reverse the polarity, check that the door lock moves to LOCK position.
If operation is not as specified, replace the door lock assembly.

DOOR LOCK AND UNLOCK SWITCH

DOOR LOCK AND UNLOCK SWITCH INSPECTION

CONTINUITY

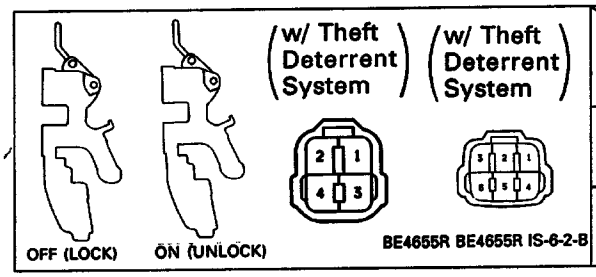

Terminal / Switch position	1 (1)	3 (4)
OFF (Door lock set to LOCK)		
ON (Door lock set to UNLOCK)	○——	——○

HINT: The number in brackets ( ) applies to vehicles w/ Theft Deterrent System.

If continuity is not as specified, replace the door lock assembly.

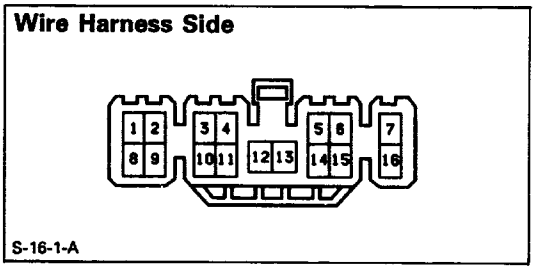

DOOR LOCK CONTROL RELAY

DOOR LOCK CONTROL RELAY INSPECTION

RELAY CIRCUIT

Disconnect the connector from the relay and inspect the connector on the wire harness side as shown in the chart.

Check for	Tester connection	Condition		Specified value
Continuity	2 – Ground	Driver's door courtesy switch position	OFF (Door– closed)	No continuity
			ON (Door– opened)	Continuity
	5 – Ground	Passenger's door lock and unlock switch position	OFF (Door locked)	No continuity
			ON (Door unlocked)	Continuity
	6 – Ground	Driver's door lock and unlock switch position	OFF (Door locked)	No continuity
			ON (Door unlocked)	Continuity
	7 – Ground	Key unlock warning switch position	OFF (Ignition key removed)	No continuity
			ON (Ignition key set)	Continuity
	9 – Ground	Driver's door key lock and unlock switch position	OFF or LOCK (Door– key free or turned to lock)	No continuity
			UNLOCK (Door key turned to unlock)	Continuity
	10 – Ground	Door lock manual switch position	OFF or UNLOCK	No continuity
			LOCK	Continuity
	11 –Ground	Door lock manual switch position	OFF or LOCK	No continuity
			UNLOCK	Continuity
	12 – Ground	Door key lock and Unlock switch position	OFF or UNLOCK (Door key free or turned to unlock)	No continuity
			LOCK (Door key turned to lock)	Continuity
	13 – Ground	Passenger's door key lock and unlock switch position	OFF or LOCK (Door key free or turned to lock)	No continuity
			UNLOCK (Door key turned to unlock)	Continuity
	14– Ground	Passenger's door courtesy switch position	OFF (Door closed)	No continuity
			ON (Door opened)	Continuity
	16 – Ground	Constant		Continuity
Voltage	1 – Ground	Ignition switch position	LOCK or ACC	No voltage
			ON	Battery voltage
	8 – Ground	Constant		Battery voltage
Resistance	15 – Ground	Constant		Approx. 600

If circuit is as specified, inspect the door lock signal.

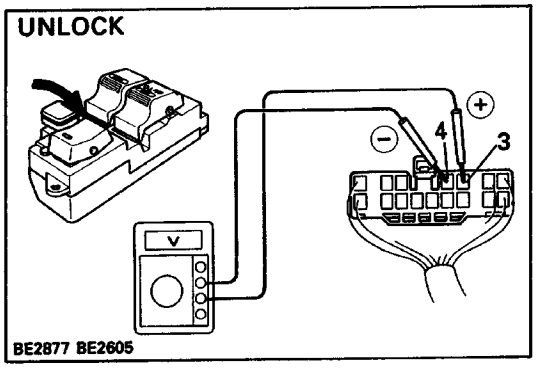

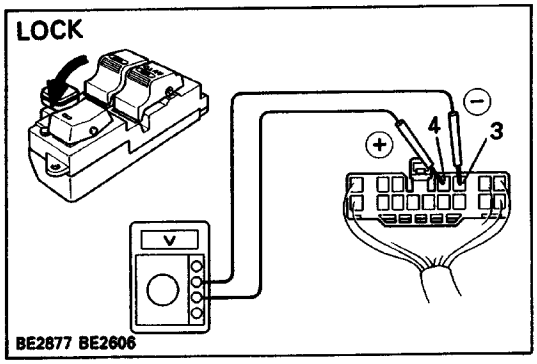

DOOR LOCK SIGNAL

HINT: When the relay circuit is as specified, inspect the door lock signal.

(a) Connect the connector to the relay.
(by Connect the positive (+) lead from the voltmeter to terminal 3 and the negative (–) lead to terminal 4.

(c) Set the door lock manual switch to UNLOCK, check that the voltage rises from 0 volts to battery voltage for approximately 0.2 seconds.

(d) Reverse the polarity of the voltmeter leads.

(e) Set the door lock manual switch to LOCK, check that the voltage rises from 0 volts to battery voltage for approximately 0.2 seconds.

If operation is not as specified, replace the relay.

POWER MIRROR CONTROL SYSTEM

PARTS LOCATION

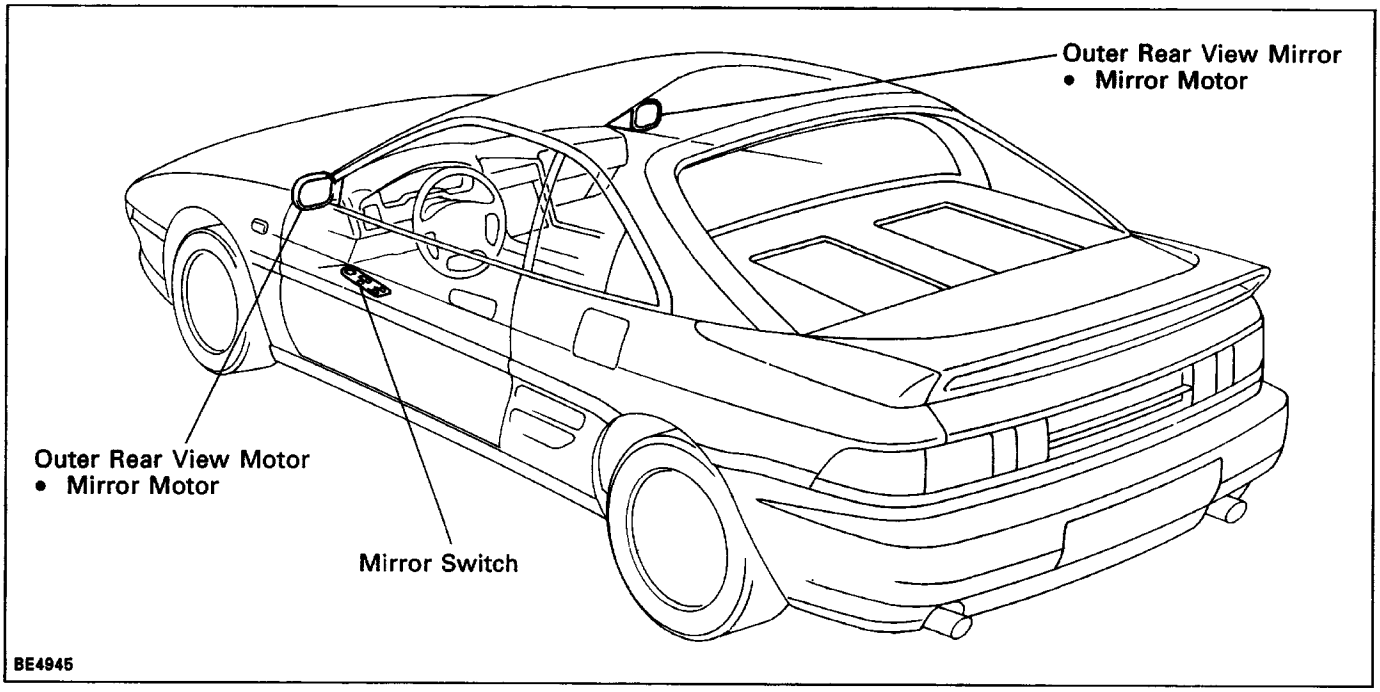

WIRING AND CONNECTOR DIAGRAMS

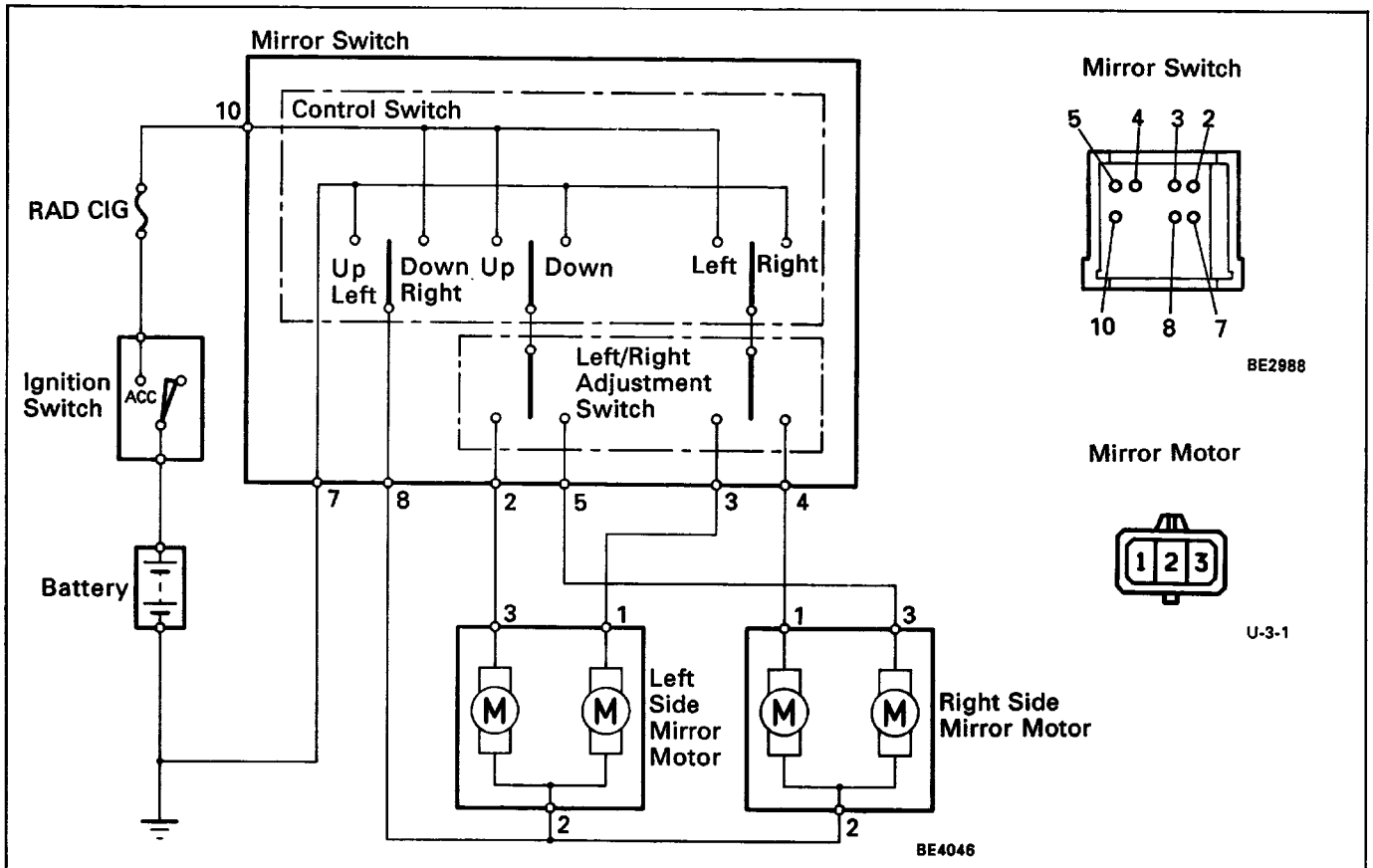

The POWER SOURCE CIRCUIT has been simplified. For full details, see page BE-9.

TROUBLESHOOTING

You will find the troubles easier using the table well shown below. In this table, each number shows the priority of causes in troubles. Check each part in order. If necessary, replace these parts.

See page / Part name / Trouble	BE–3	BE–106	BE–106	BE–106	
	Fuse RADIO	Mirror Switch	Mirror Motor (Up/Down Control)	Mirror Motor (Left or Right Control	Wiring and Ground
Power mirror on each side does not operate at all.	1	2	3	3	3
Left or right power mirror does not operate at all.		1	2	2	3
Up/Down control of left or right power mirror does not operate.			1		2
Left or Right control of left or right power mirror does not operate.				1	2

MIRROR SWITCH

MIRROR SWITCH INSPECTION

CONTINUITY

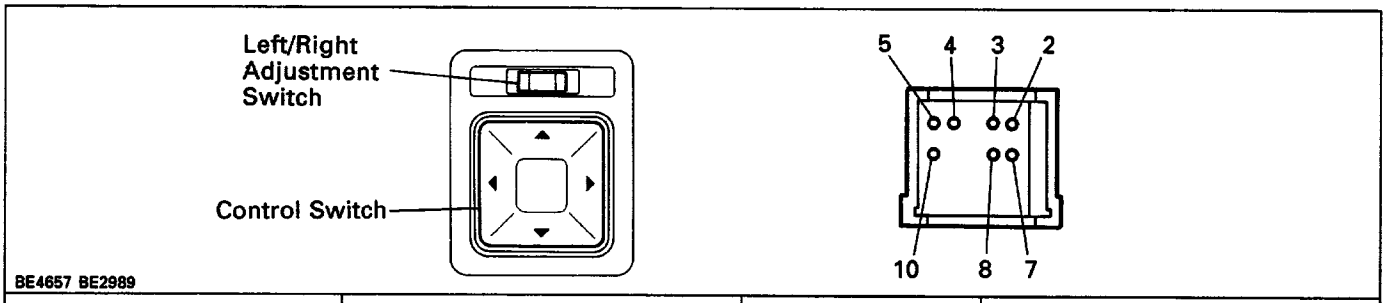

Left/Right adjustment switch position	LEFT SIDE					OFF			RIGHT SIDE				
Terminal / Control switch position	2	3	7	8	10	7	8	10	4	5	7	8	10
OFF													
UP	○		○	○	○	○	○			○	○	○	○
DOWN	○		○	○	○		○	○		○	○	○	○
LEFT		○	○	○	○	○	○		○		○	○	○
RIGHT		○	○	○	○		○	○	○		○	○	○

If continuity is not as specified, replace the switch.

MIRROR MOTOR

MIRROR MOTOR INSPECTION

INSPECT MIRROR MOTOR

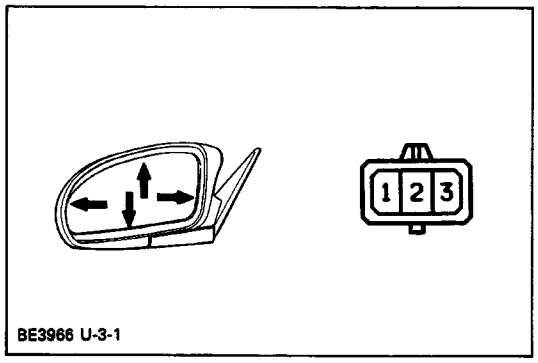

Connect the positive (+) lead from the battery to terminal is column ”A” and the negative (–) lead to terminal in column ”B”, check that the mirror operates in column “C.”

A (+)	B (–)	C (Operation)
3	2	Mirror turns upward
2	3	Mirror turns downward
1	2	Mirror turns to left side
2	1	Mirror turns to right side

If operation is not as specified, replace the mirror assembly.

POWER SOURCE
PARTS LOCATION

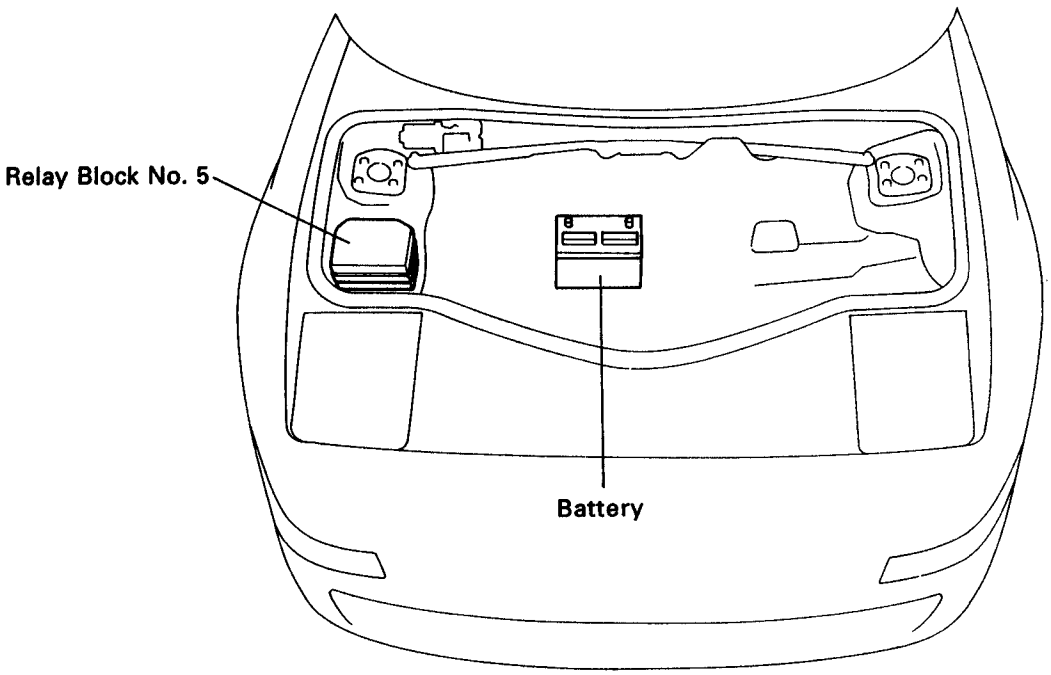

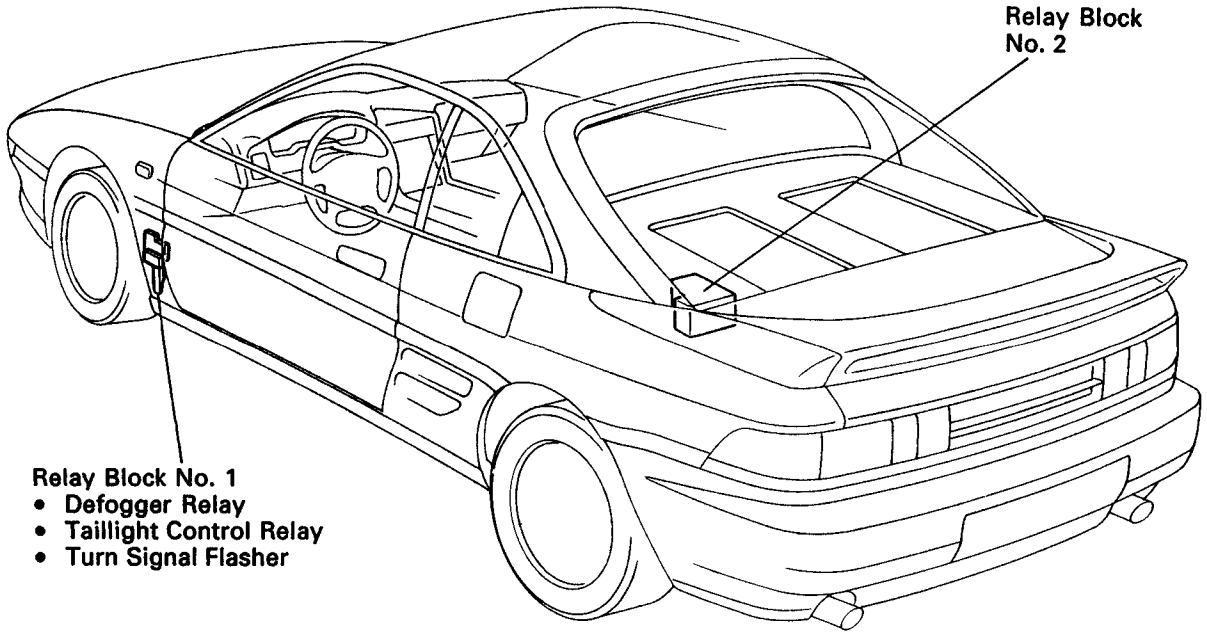

BE4932
BE4933

RELAY BLOCK NO. 1

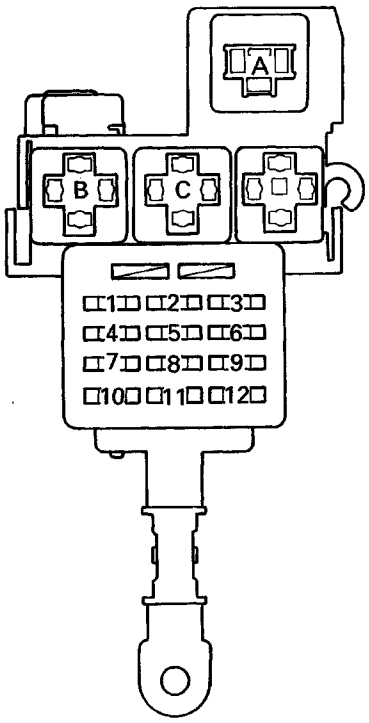

	Fuse	
1.	RAD CIG	15 A
2.	GAUGE	7.5 A
3.	STOP	15 A
4.	PWR	30 A
5.	TURN	7.5 A
6.	DEFOG	20 A
7.	DOOR	20 A
8.	WIPER	20 A
9.	TAIL	15 A
10.	PANEL	7.5 A
11.	–	–
12.	–	

Relays

A. TURN SIGNAL FLASHER
B. DEFOGGER
C. TAIL (Taillight Control)

RELAY BLOCK NO. 2

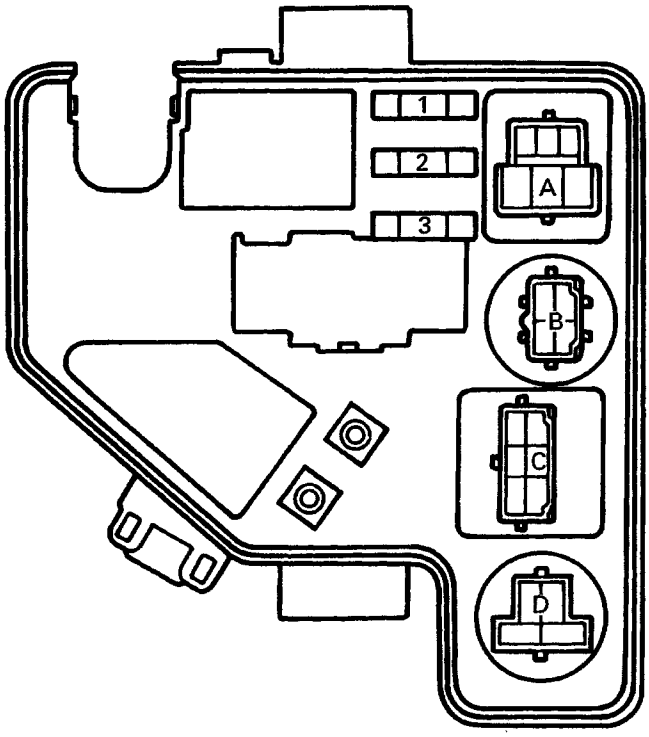

	Fuse	
1.	EFI	15 A
2.	VENT	20 A
3.	ECU-IG	7.5 A

Relays

A. IGN
B. EFI
C. C/OPN
D. VENT

BE4935
BE4934

RELAY BLOCK NO. 5

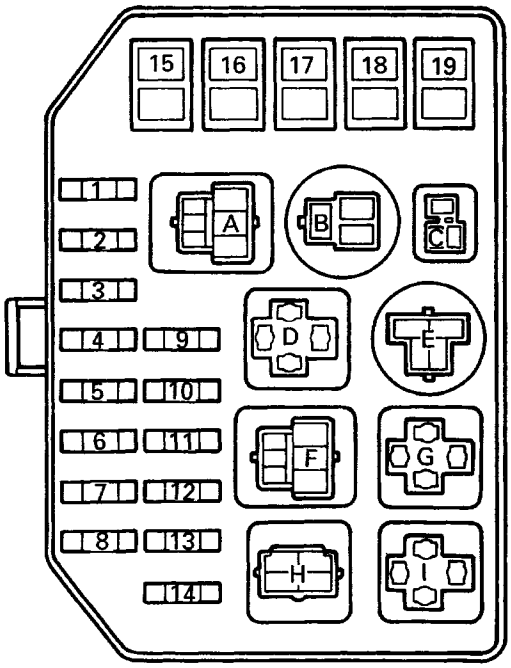

Fuses and High Current Fuses

1.	ALT SENCING	7.5 A	
2.	CDS FAN	30 A	
3.	RAD FAN	30 A	
4.	FR FOG	15 A	
5.	–		
6.	–		
7.	HEAD (LH)	15 A	
8.	HEAD (RH)	15 A	
9.	A.C.	10 A	
10.	ECU-B	7.5 A	
11.	AM2	7.5 A	
12.	HAZ-HORN	15 A	
13.	RTR	30 A	
14.	DOME	15 A	
15.	AM1	50 A	H-Fuse
16.	HTR	40 A	H-Fuse
17.	A.B.S.	80 A	H-Fuse
18.	ALT	120A	H-Fuse
19.	AM2	40 A	H-Fuse

Relays

A. HTR
B. H-LP (Headlight Control)
C. HORN
D. FAN NO. 2
E. FAN NO. 1
F. FAN MAIN
G. FAN NO. 3
H. –
I. FR FOG

BE4937

WIRING DIAGRAM

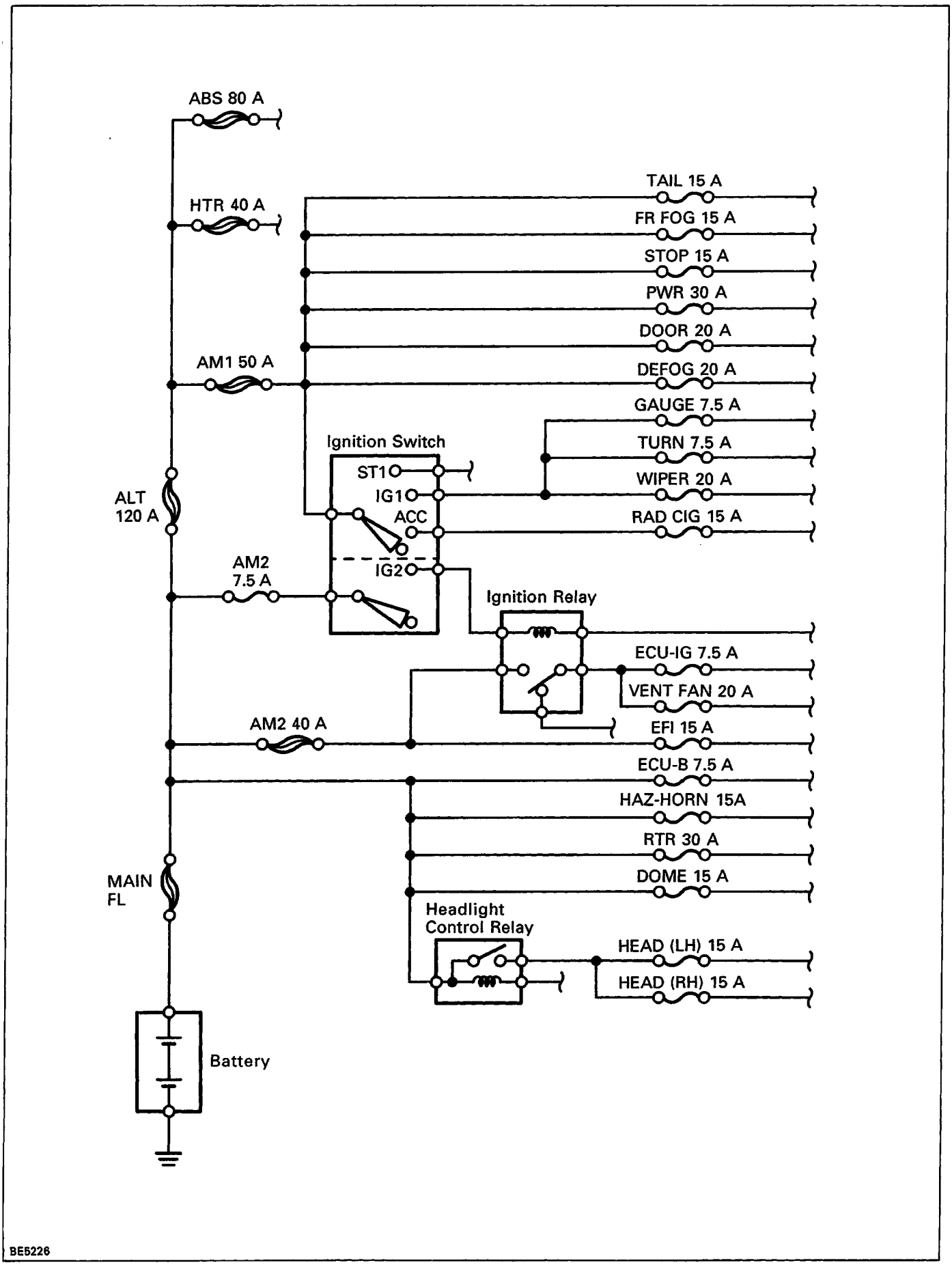

POWER WINDOW CONTROL SYSTEM

PARTS LOCATION

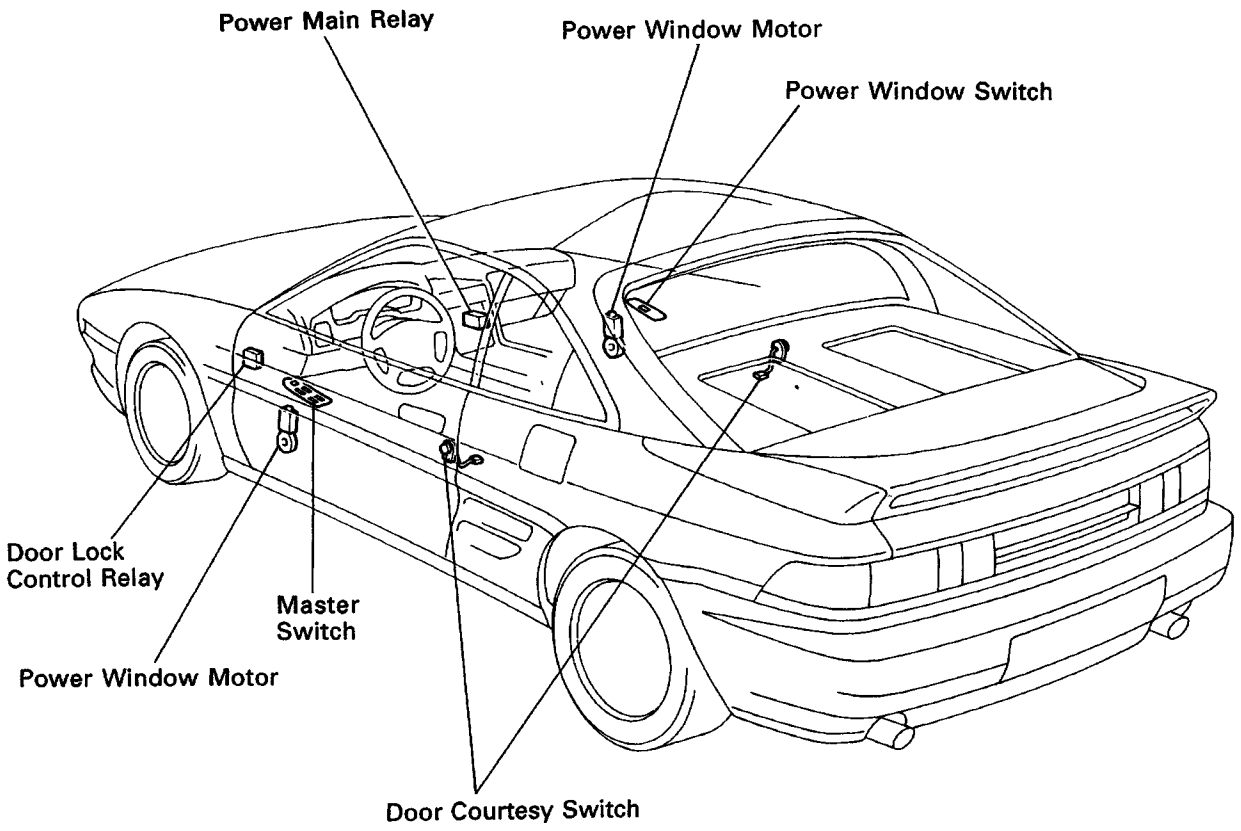

N04467

WIRING AND CONNECTOR DIAGRAMS

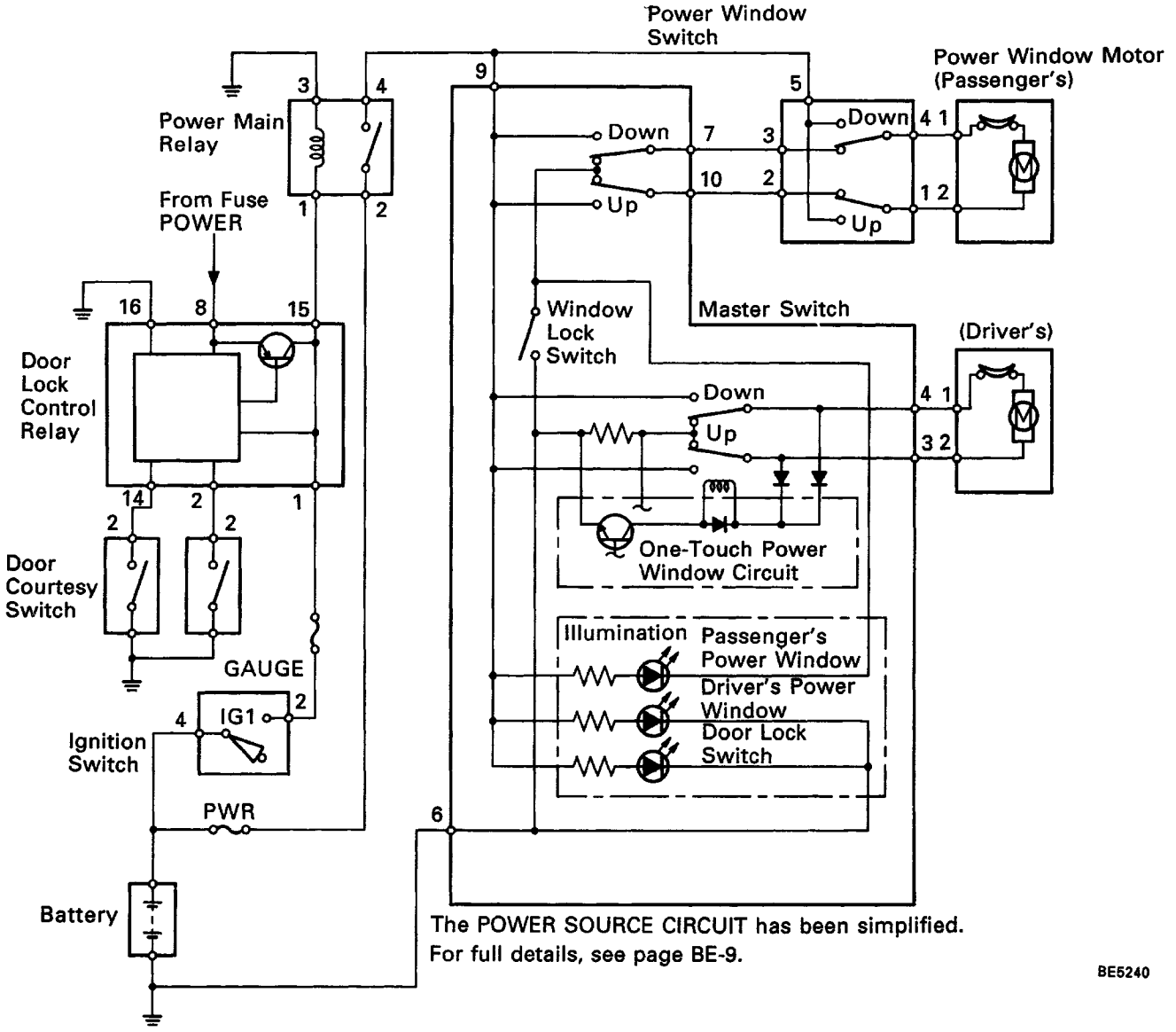

Master Switch

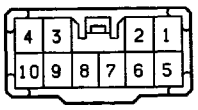

S-10-2

Power Window Switch

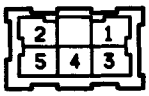

G-5-2-A

Power Window Motor



r-2-2

Power Main Relay

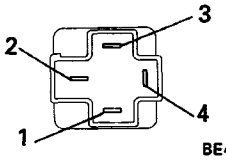

BE4049

Door Lock Control Relay

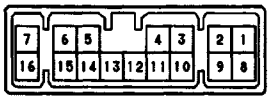

S-16-2-A

Door Courtesy Switch



e-2-1-G

Ignition Switch

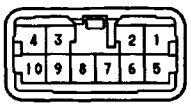

g-10-2-B

TROUBLESHOOTING

You will find the troubles easier using the table well shown below. In this table, each number shows the priority of causes in troubles. Check each part in order. If necessary, replace these parts.

See page / Part name / Trouble	BE–3	BE–3	BE–95	BE–92	BE–94	BE–94	I	BE–95	BE–11
	POWER Fuse (M–Fuse)	GAUGE Fuse	Power Main Relay	Power Window Master Switch	Power Window Switch	Power Window Motor	Wire Harness	Door Lock Control Relay	Ignition Switch
Power Window does not operate. *1	1	2	3	6			7	5	4
Power Window does not operate.” *2	1	2	5	6			7	4	3
”One Touch Power Window System” does not operate.				1					
Only one window glass does not move.				1	2	3	4		
”Window Lock System” does not operate.				1					
”Window Lock Illumination” does not light up.				1					

*1: Power door lock control system does not operate.

*2: Power door lock control is normal.

POWER WINDOW MASTER SWITCH

POWER WINDOW MASTER SWITCH INSPECTION

CONTINUITY

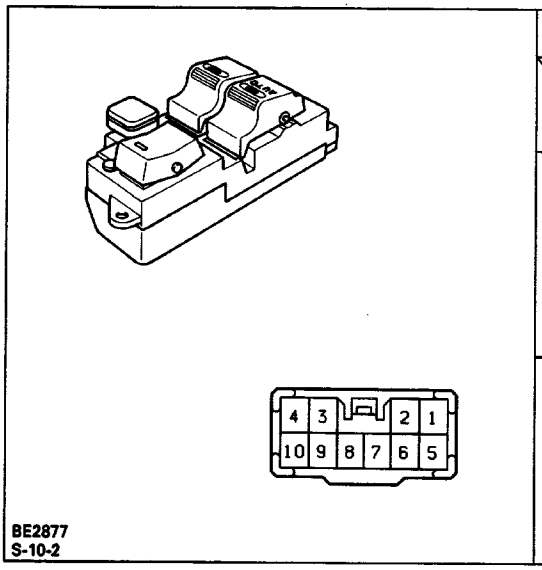

Window operation		Driver's				Passenger's			
Terminal / Switch position		3	4	6	9	6	7	9	10
Window unlock	UP	○	○	○	○	○	○	○	○
	OFF	○	○	○		○	○		○
	DOWN	○		○		○		○	
			○		○		○		○
Window lock	UP	○	○	○	○			○	○
	OFF	○	○	○			○		○
	DOWN	○		○			○		
			○		○				

If continuity is not as specified, replace the switch.

ILLUMINATION

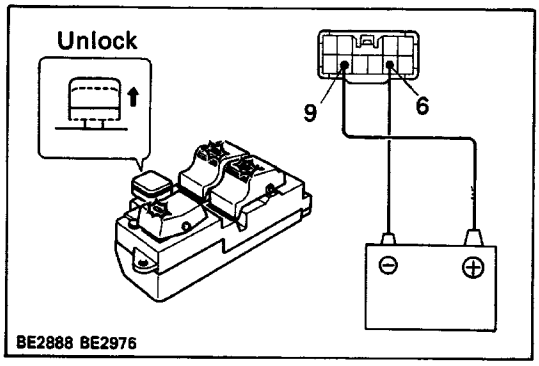

(a) Set the window lock switch to the unlock position.

(b) Connect the positive (+) lead from the battery to terminal 9 and the negative (–) lead to terminal 6, check that all the illuminations light up.

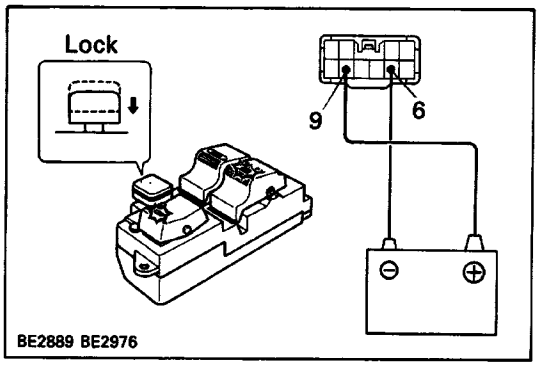

(c) Set the window lock switch to the lock position, check that the passenger's power window switch illumination goes out.

If operation is not as specified, replace the master switch.

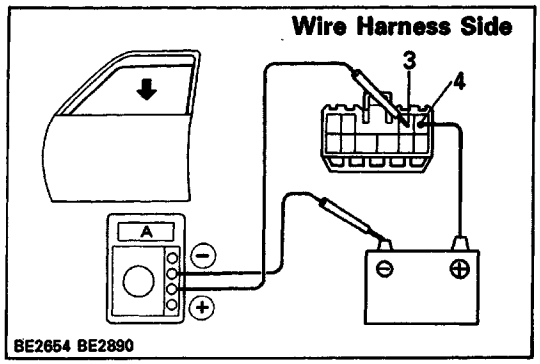

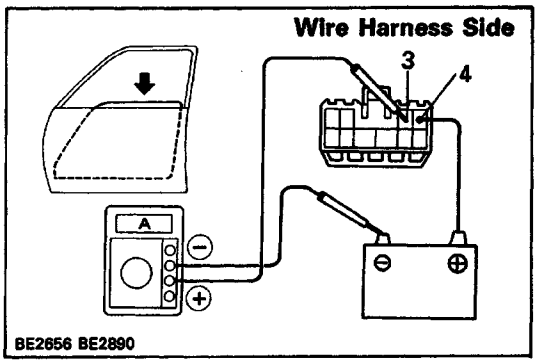

ONE TOUCH POWER WINDOW SYSTEM/CURRENT OF CIRCUIT

INSPECTION USING AN AMMETER:

(a) Disconnect the connector from the master switch.
(b) Connect the positive (+) lead from the ammeter to terminal 3 on the wire harness side connector and the negative (–) lead to negative terminal of the battery.
(c) Connect the positive (+) lead from the battery to terminal 4 on the wire harness side connector.
(d) As the window goes down, check that the current flows approximately 7 amperes.
(e) Check that the current increases approximately 14.5 amperes or more when the window stops going down.

HINT: The circuit breaker opens some 4 – 40 seconds after the window stops going down, so that check must be made before the circuit breaker operates.

If operation is as specified, replace the master switch.

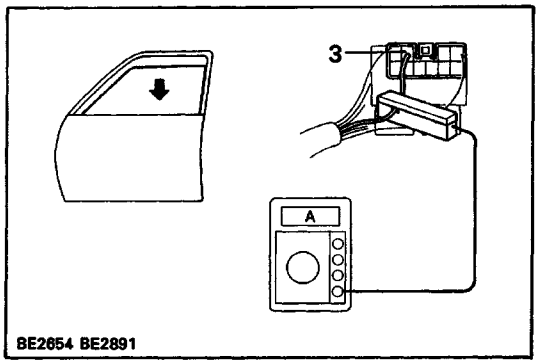

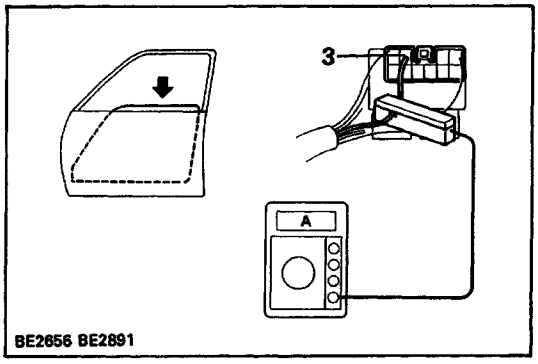

INSPECTION USING AN AMMETER WITH A CURRENT MEASUREMENT PROBE:

(a) Remove the master switch with connector connected.
(b) Attach a current–measuring probe to terminal 3 of the wire harness.
(e) Turn the ignition switch ON and set the power window switch in the down position.
(d) As the window goes down, check that the current flows approximately 7 amperes.
(e) Check that the current increases approximately 14.5 amperes or more when the window stops going down.

HINT: The circuit breaker opens some 4 – 40 seconds after the window stops going down, so that check must be made before the circuit breaker operates.

If operation is as specified, replace the master switch.

POWER WINDOW SWITCH

POWER WINDOW SWITCH INSPECTION

CONTINUITY

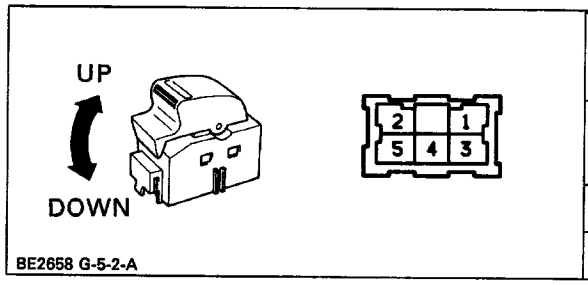

Terminal / Condition	1	2	3	4	5
UP	○				○
			○	○	
OFF	○	○	○	○	
DOWN	○	○		○	○

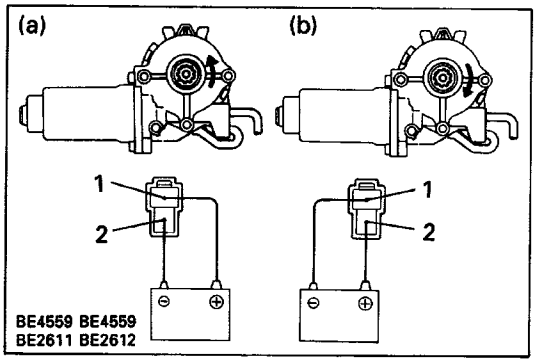

If continuity is not as specified, replace the switch.

POWER WINDOW MOTOR

POWER WINDOW MOTOR INSPECTION

LEFT SIDE DOOR MOTOR/MOTOR OPERATION

(a) Connect the positive (+) lead from the battery to terminal 1 and the negative (–) lead to terminal 2, check that the motor turns counterc ckwise.

(b) Reverse the polarity, check that the motor turns clockwise.

If operation is not as specified, replace the motor.

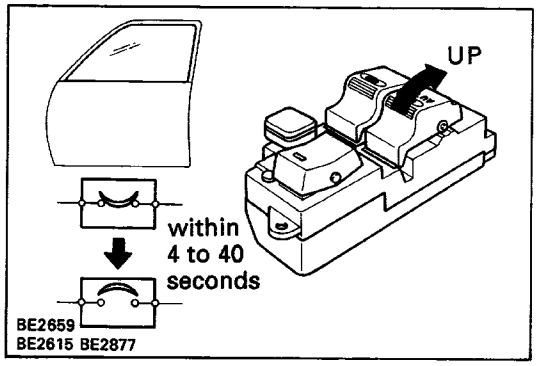

LEFT SIDE DOOR MOTOR/CIRCUIT BREAKER OPERATION

(a) With the window in the full closed position, hold the power window switch in ”UP” position and check that there is a circuit breaker operation noise within 4 to 40 seconds.

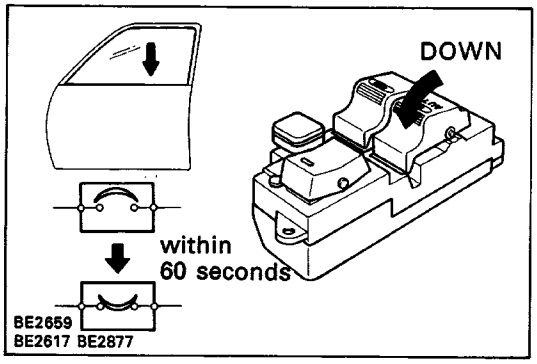

(b) With the window in the full closed position, hold the switch in ”DOWN” and check that the window begins to descend with in 60 seconds.

If operation is not as specified, replace the motor.

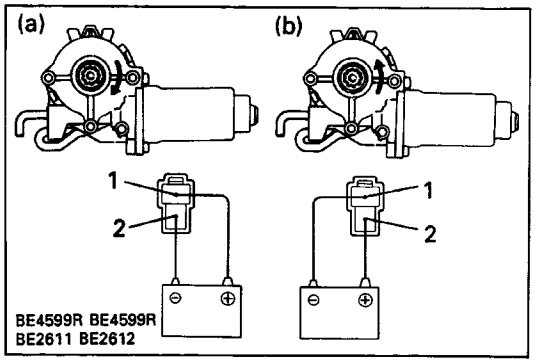

RIGHT SIDE DOOR MOTOR/MOTOR OPERATION

(a) Connect the positive W lead from the battery to terminal 1 and the negative H lead to terminal 2, check that the motor turns clockwise.

(b) Reverse the polarity, check that the motor turns counterclockwise.

If operation is not as specified, replace the motor.

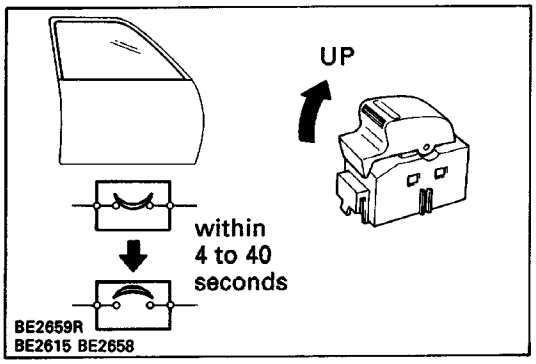

RIGHT SIDE DOOR MOTOR/CIRCUIT BREAKER OPERATION

(a) With the window in the full closed position, hold the power window switch in "UP" position and check that there is a circuit breaker operation noise within 4 to 40 seconds.

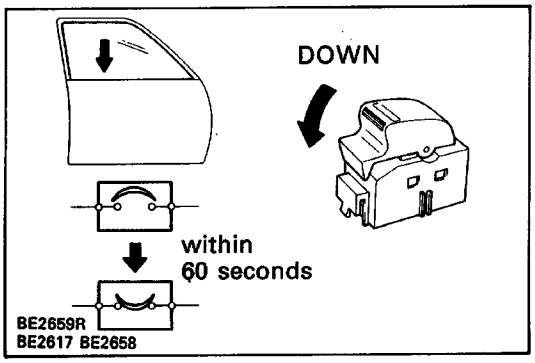

(b) With the window in the full closed position, hold the switch in "DOWN" and check that the window begins to-descend within 60 seconds.
If operation is not as specified, replace the motor.

DOOR LOCK CONTROL RELAY

DOOR LOCK CONTROL RELAY INSPECTION

See Door Lock Control System on page BE–102**.**

POWER MAIN RELAY

POWER MAIN RELAY INSPECTION

CONTINUITY

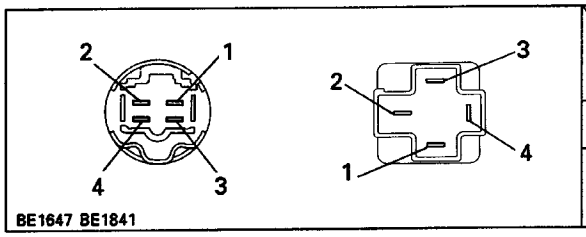

Terminal / Condition	1	2	3	4
Constant	○	∿	○	
Apply battery voltage to terminals 1 and 3.		○		○

If continuity is not as specified, replace the relay.

STOP LIGHT SYSTEM

PARTS LOCATION

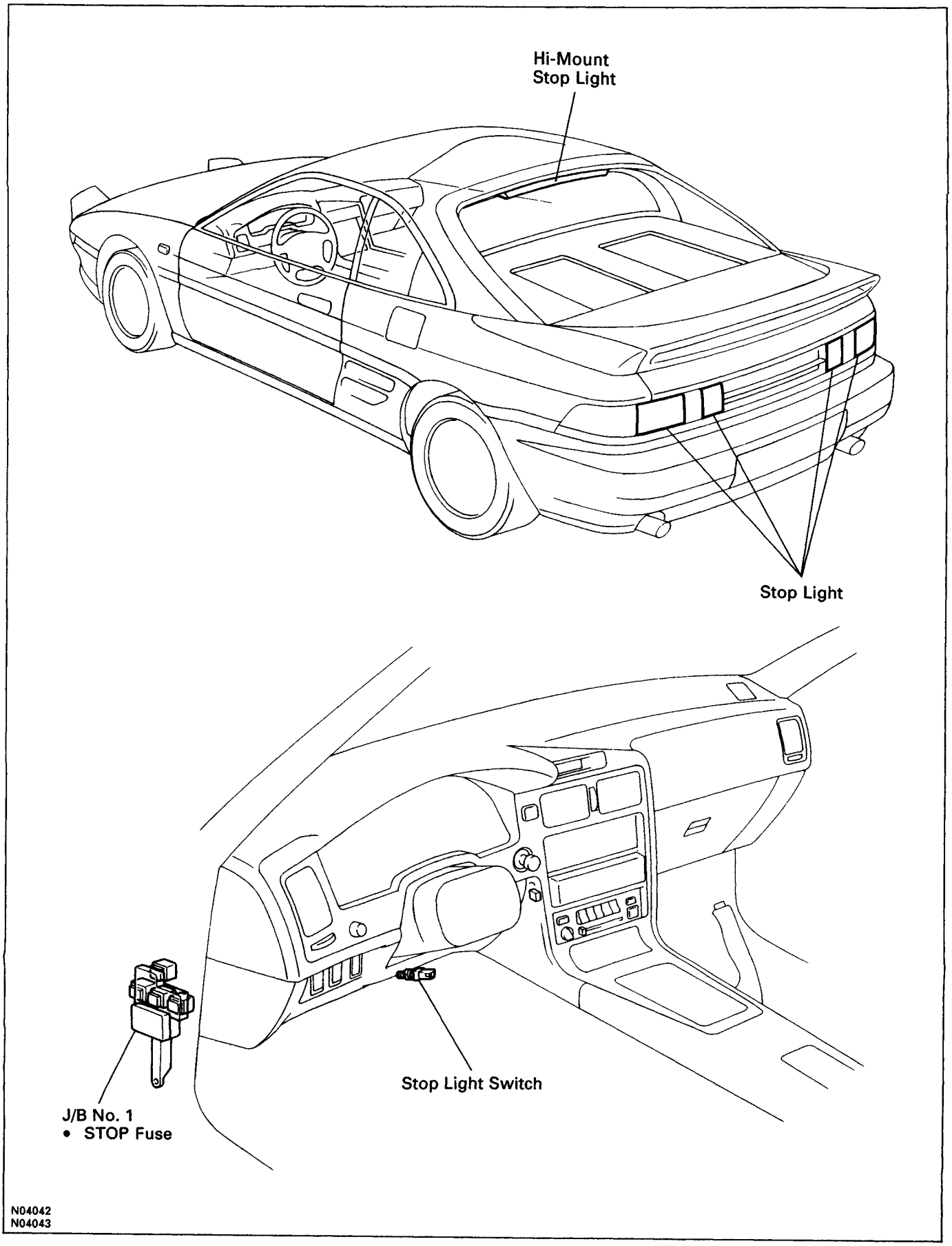

WIRING AND CONNECTOR DIAGRAM

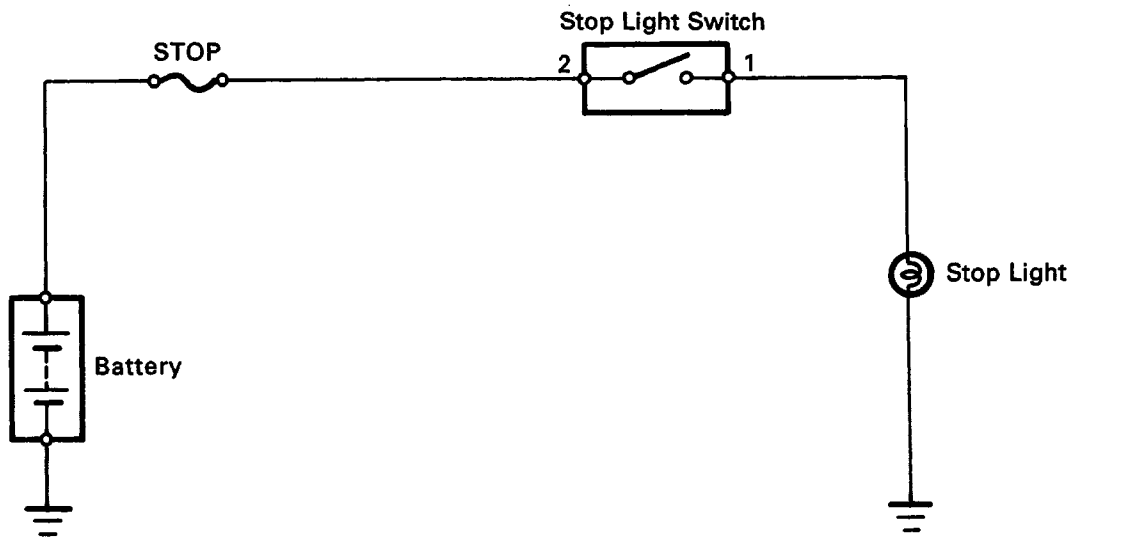

Stop Light Switch

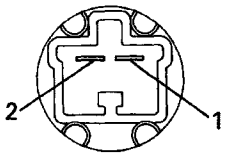

The POWER SOURCE CIRCUIT has been simplified. For full details, see page BE-9.

TROUBLESHOOTING

You will find the troubles easier using the table well shown below. In this table, each number shows the priority of causes in troubles. Check each part in order. If necessary, replace these pans.

See page / Part name / Trouble	STOP Fuse	Stop Light Switch	Bulb	Wire Harness
	BE–3	BE–54		
Stop light does not light up.	1	2	4	3
Stop light remains always on.		1		2
Only one light does not fight up.			2	1

STOP LIGHT SWITCH

STOP LIGHT SWITCH INSPECTION

CONTINUITY

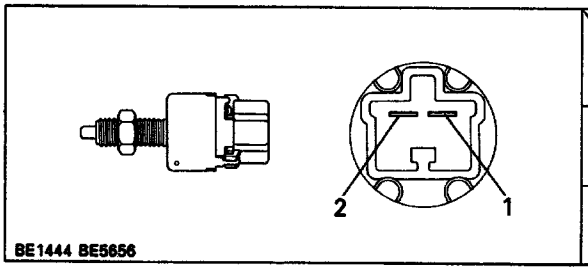

Terminal / Switch position	1	2
Switch pin free (Brake pedal depressed)	○	○
Switch pin pushed in (Brake pedal released)		

If continuity is not as specified, replace the switch.

THEFT DETERRENT SYSTEM

PARTS LOCATION

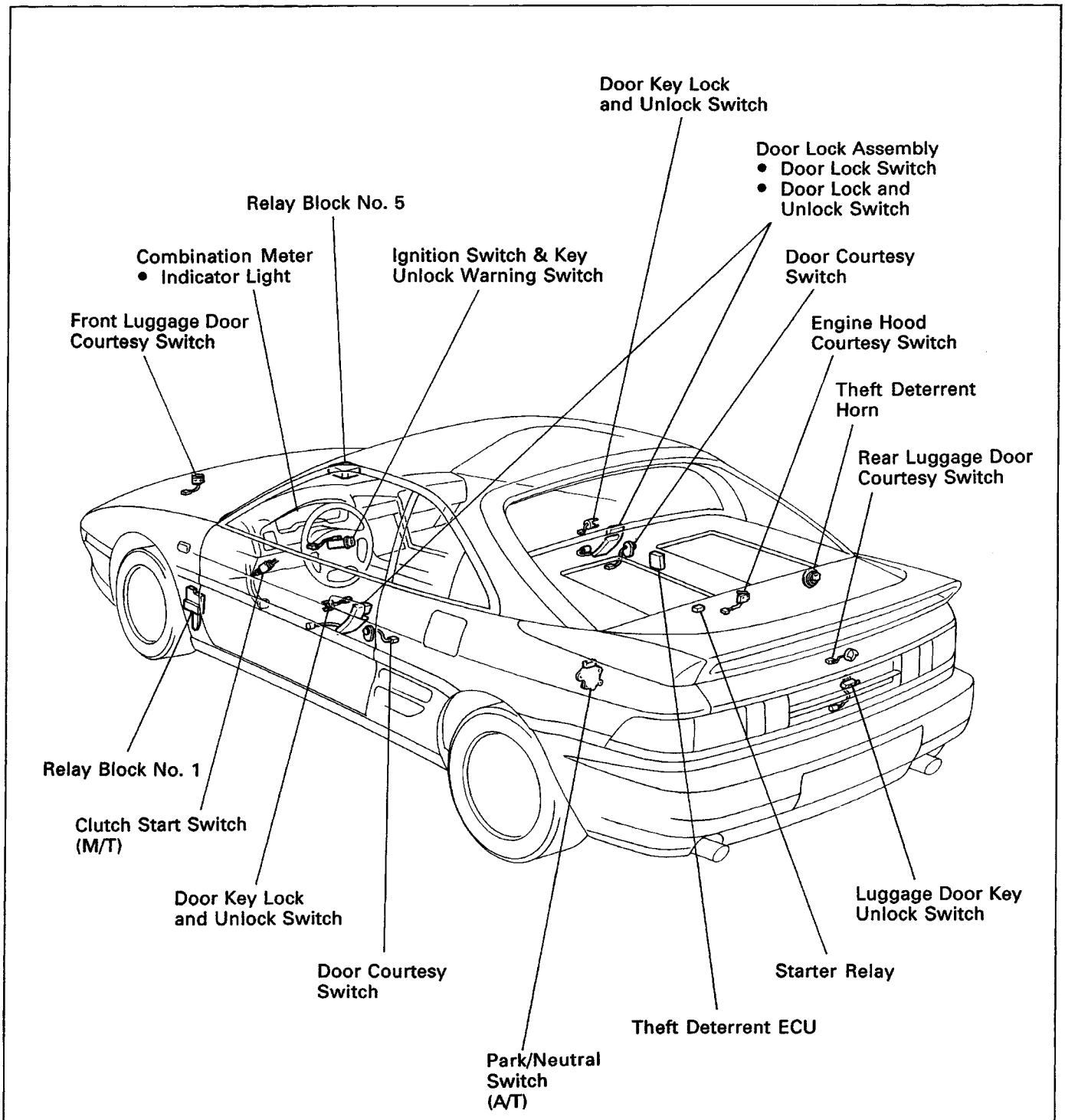

BE5246

WIRING DIAGRAM

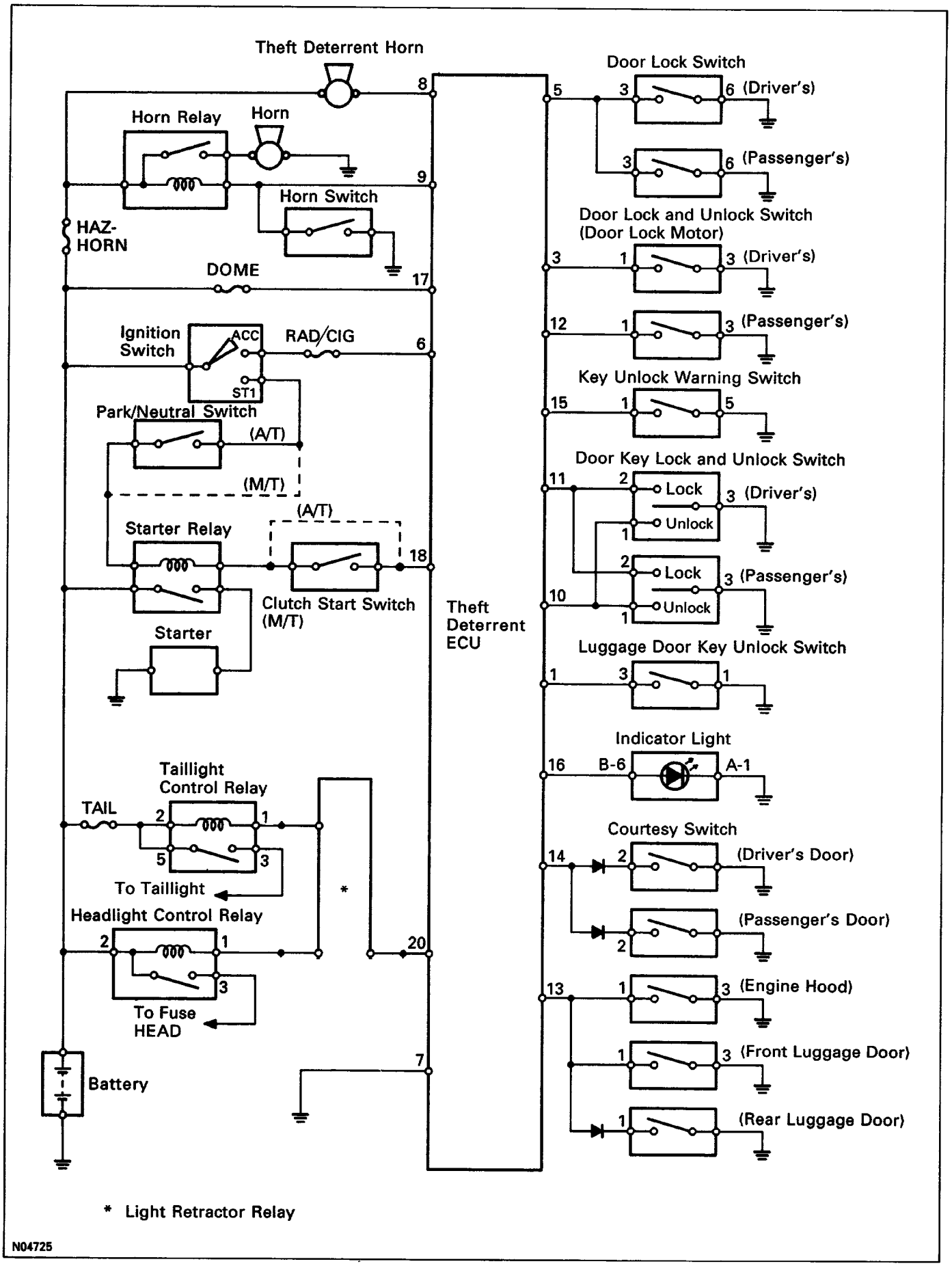

CONNECTOR DIAGRAMS

Theft Deterrent ECU

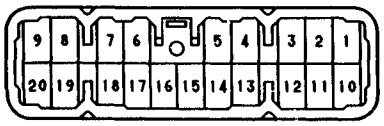

e-20-2-C

Door Key Lock and Unlock Switch



Ie-3-1

Luggage Door Key Unlock Switch



GA-3-1

Door Lock Assembly

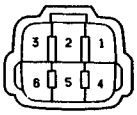

IS-6-2-B

Theft Deterrent Horn

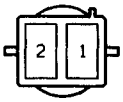

IA-2-2

Courtesy Switch

(Engine Hood)



IU-3-2

(Front Luggage Door)



IU-3-2

(Rear Luggage Door)



e-1-1

(Door)



e-2-1-G

Ignition Switch
• Key Unlock Warning Switch

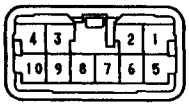

g-10-2-B

Starter Relay

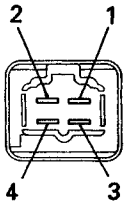

ST0280

Headlight Control Relay

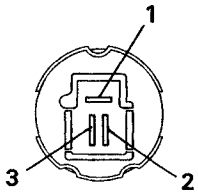

BE2763

Taillight Control Relay

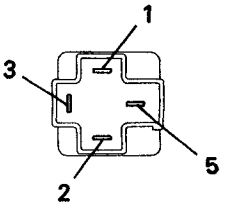

BE4049

TROUBLESHOOTING

- Check that the operation of Power Door Lock Control System is normal.
- When the system is not operating, lower the door glass and confirm under what conditions it does not operate, or malfunctions.

Problem	Inspection Item	Section
Theft deterrent system can not be set.	Power source circuit	A
Indicator light does not light even if theft deterrent system operated.	Indicator light circuit	B
Theft deterrent system does not operate when driver's and passenger's doors opened.	Door lock and unlock switch circuit Door lock switch circuit Door courtesy switch circuit	C D E
Theft deterrent system does not operate when front and rear luggage doors opened.	Luggage door courtesy switch circuit	E
Theft deterrent system does not operate when engine hood opened.	Engine hood courtesy switch circuit	E
Theft deterrent system does not cancel when driver's and passenger's doors unlocked with key.	Door key lock and unlock switch circuit	F
Theft deterrent system does not cancel when rear luggage door unlocked with key.	Luggage door key unlock switch circuit	G
Theft deterrent system does not cancel when ignition switch turned to ON or ACC position.	Ignition switch circuit Key unlock warning switch circuit	H I
Starter cut system does not operate even if theft deterrent system operated.	Starter cut system circuit	J
Starter cut system does not cancel even if theft deterrent system canceled.	Starter cut system circuit	J
Horn does not blow even if theft deterrent system operated.	Theft deterrent horn circuit Standard equipment horns circuit	K
Theft deterrent horn blows even if system is not set.	Theft deterrent horn circuit	K
Headlights do not flash even if theft deterrent system operated.	Light retractor relay circuit	L
Taillights do not flash even if theft deterrent system operated.	Light retractor relay circuit	L
Headlights flash even if system is not set.	Light retractor relay circuit	L
Taillights flash even if system is not set.	Light retractor relay circuit	L

A POWER SOURCE CIRCUIT

Turn ignition switch off.

Is DOME fuse normal?

No → Replace fuse. Is operation normal?

No → Short circuit in wire harness between fuse and terminal 17 of TD ECU.

Yes → Fuse faulty.

Yes

TD ECU

Disconnect TD ECU connector and inspect connector on wire harness side as follows.

INSPECT POWER SOURCE
Is there battery voltage between terminal 17 and ground.

No → Open circuit in wire harness between fuse and terminal 17 of TD ECU.

Yes

INSPECT GROUND CONNECTION
Is there continuity between terminal 7 and ground.

No →
- Open circuit in wire harness between terminal 7 of TD ECU and ground.
- Ground faulty.

Yes

INSPECT FOLLOWING SECTIONS:

Door Lock and Unlock Switch Circuit .: .	Section C
Door Lock Switch Circuit	Section D
Courtesy Switch Circuit	Section E
Door Key Lock and Unlock Switch Circuit	Section F
Luggage Door Key Unlock Switch Circuit .	Section G
Ignition Switch Circuit	Section H
Key Unlock Warning Switch	Section I

Replace TD ECU. Then recheck system.

TD: Theft Deterrent

B INDICATOR LIGHT CIRCUIT

Turn ignition switch off.

TD ECU

Disconnect TD ECU connector and inspect connector on wire harness side as follows.

INSPECT INDICATOR LIGHT CIRCUIT
Connect the negative lead from the ohmmeter to terminal 16 and positive lead to ground.
* Is there continuity between terminal 16 and ground?

No → Open circuit in indicator light circuit.

Yes

Replace TD ECU. Then recheck system.

*: This circuit includes the LED. If the circuit shows no continuity, change the positive and negative probes and recheck the circuit.

TD: Theft Deterrent

C DOOR LOCK AND UNLOCK SWITCH CIRCUIT

Turn ignition switch off.

TD ECU

Disconnect TD ECU connector and inspect connector on wire harness side as follows.

INSPECT DRIVER'S DOOR LOCK AND UNLOCK SWITCH CIRCUIT
Is there continuity between terminal 3 and ground with driver's door unlocked?

No → Open circuit in driver's door lock and unlock switch circuit.

Yes

INSPECT PASSENGER'S DOOR LOCK AND UNLOCK SWITCH CIRCUIT
Is there continuity between terminal 12 and ground with passenger's door unlocked?

No → Open circuit in passenger's door lock and unlock switch circuit.

Yes

Replace TD ECU. Then recheck system.

TD: Theft Deterrent

D DOOR LOCK SWITCH CIRCUIT

Turn ignition switch off.

TD ECU

Disconnect TD ECU connector and inspect connector on wire harness side as follows.

INSPECT DRIVER'S DOOR LOCK SWITCH CIRCUIT
Is there continuity between terminal 5 and ground with driver's door opened?

No → Open circuit in driver's door lock switch circuit.

Yes

INSPECT PASSENGER'S DOOR LOCK SWITCH CIRCUIT
Is there continuity between terminal 5 and ground with passenger's door opened?

No → Open circuit in passenger's door lock switch circuit.

Yes

Replace TD ECU. Then recheck system.

TD: Theft Deterrent

E COURTESY SWITCH CIRCUIT

Turn ignition switch off.

TD ECU

Disconnect TD ECU connector and inspect connector on wire harness side as follows.

Driver's and Passenger's Door

INSPECT DRIVER'S DOOR COURTESY SWITCH CIRCUIT
Close passenger's door.
* Is there continuity between terminal 14 and ground with driver's door opened?

No → Open circuit in driver's door courtesy switch circuit.

Yes

INSPECT PASSENGER'S DOOR COURTESY SWITCH CIRCUIT
Close driver's door.
* Is there continuity between terminal 14 and ground with passenger's door opened?

No → Open circuit in passenger's door courtesy switch circuit.

Yes

Engine Hood

INSPECT ENGINE HOOD COURTESY SWITCH CIRCUIT
Close front and rear luggage doors.
Is there continuity between terminal 13 and ground with engine hood opened

No → Open circuit in engine hood courtesy switch circuit.

Yes

Luggage Door

INSPECT FRONT LUGGAGE DOOR COURTESY SWITCH CIRCUIT
Close engine hood and rear luggage door.
Is there continuity between terminal 13 and ground with front luggage door opened?

No → open circuit in front luggage door courtesy switch circuit.

Yes

INSPECT REAR LUGGAGE DOOR COURTESY SWITCH CIRCUIT
Close engine hood and front luggage door.
* Is there continuity between terminal 13 and ground with rear luggage door opened?

No → Open circuit in rear luggage door courtesy switch circu it.

Yes

Replace TD ECU. Then recheck system.

*: This circuit includes the diode. If the circuit shows no continuity, change the positive and negative probes and recheck the circuit.

TD: Theft Deterrent

F DOOR KEY LOCK AND UNLOCK SWITCH CIRCUIT

Turn ignition switch off.

TD ECU

Disconnect TD ECU connector and inspect connector on wire harness side as follows.

DRIVER'S DOOR

INSPECT KEY LOCK SWITCH CIRCUIT
Is there continuity between terminal 11 and ground with driver's door locked with key?

No → Open circuit in driver's door key lock switch circuit.

Yes

Is there continuity between terminal 11 and ground with driver's door unlocked with key?

Yes → Short circuit in driver's door key lock switch circuit.

No

INSPECT KEY UNLOCK SWITCH CIRCUIT
Is there continuity between terminal 10 and ground with driver's door unlocked with key?

No → Open circuit in driver's door key unlock switch circuit.

Yes

Is there continuity between terminal 10 and ground with driver's door locked with key?

Yes → Short circuit in driver's door key unlock switch circuit.

No

PASSENGER'S DOOR

INSPECT KEY LOCK SWITCH CIRCUIT
Is there continuity between terminal 11 and ground with passenger's door locked with key?

No → Open circuit in passenger's door key lock switch circuit.

Yes

Is there continuity between terminal 11 and ground with passenger's door unlocked with key?

Yes → Short circuit in passenger's door key lock switch circuit.

No

INSPECT KEY UNLOCK SWITCH CIRCUIT
Is there continuity between terminal 10 and ground with passenger's door unlocked with key?

No → Open circuit in passenger's door key unlock switch circuit.

Yes

Is there continuity between terminal 10 and ground with passenger's door locked with key?

Yes → Short circuit in passenger's door key unlock switch circuit.

No

Replace TD ECU. Then recheck system.

TD: Theft Deterrent

G LUGGAGE DOOR KEY UNLOCK SWITCH CIRCUIT

Turn ignition switch off.

TD ECU

Disconnect TD ECU connector and inspect connector on wire harness side as follows.

INSPECT LUGGAGE DOOR KEY UNLOCK SWITCH CIRCUIT
Is there continuity between terminal 1 and ground with luggage door key free?

Yes → Short circuit in luggage door key unlock switch circuit.

No

Is there continuity between terminal 1 and ground with luggage door unlocked with key?

No → Open circuit in luggage door key unlock switch circuit.

Yes

Replace TD ECU. Then recheck system.

TD: Theft Deterrent

H IGNITION SWITCH CIRCUIT

Turn ignition switch off.

Is RAD/CIG fuse normal?

No → Replace fuse. Is operation normal?

No → Short circuit in wire harness between fuse and terminal 6 of TD ECU.

Yes → Fuse faulty.

Yes

TD ECU

Disconnect TD ECU connector and inspect connector on wire harness side as follows.

INSPECT IGNITION SWITCH CIRCUIT
Is there battery voltage between terminal 6 and ground with ignition switch turned to ACC or ON.

No → Open circuit in wire harness between fuse and terminal 6 of TD ECU.

Yes

Replace TD ECU. Then recheck system.

TD: Theft Deterrent

I KEY UNLOCK WARNING SWITCH CIRCUIT

Turn ignition switch OFF.

TD ECU

Disconnect TD ECU connector and inspect connector on wire harness side as follows.

INSPECT KEY UNLOCK WARNING SWITCH CIRCUIT
Ignition key set to ignition switch.
Is there continuity between terminal 15 and ground?

No → Open circuit in key unlock warning switch circuit.

Yes

Ignition key removed from ignition switch.
Is there continuity between terminal 15 and ground?

Yes → Short circuit in key unlock warning switch circuit.

No

Replace TD ECU. Then recheck system.

TD: Theft Deterrent

J STARTER CUT SYSTEM CIRCUIT

Turn ignition switch off.

HINT: if starter does not operate, even when system is cancelled, before checking the circuit, use the key to turn the door lock to the unlock position and recheck starter operation.

TD ECU

Disconnect TD ECU connector and inspect connector on wire harness side as follows.

INSPECT STARTER CUT SYSTEM CIRCUIT

Turn ignition switch to ST position (*1 with shift lever at N or P position or *2 with clutch pedal depressed).
Is there battery voltage between terminal 18 and ground?

No → Short or open circuit in starter relay circuit.

Yes

Replace TD ECU. Then recheck system.

TD: Theft Deterrent
*1 A/T
*2 M/T

K THEFT DETERRENT HORN CIRCUIT

Turn ignition switch off.

THEFT DETERRENT HORN

INSPECT THEFT DETERRENT HORN OPERATION
Disconnect connector from horn.
Is horn operation normal? (See page BE–156)

No → Replace theft deterrent horn.

Yes

TD ECU

Disconnect TD ECU connector and inspect connector on wire harness side as follows.

INSPECT THEFT DETERRENT HORN CIRCUIT
Is there battery voltage between terminal 8 and ground?

No → Open or short circuit in theft deterrent horn circuit.

Yes

INSPECT STANDARD EQUIPMENT HORN CIRCUIT
Is there battery voltage between terminal 9 and ground?

No → Open or short circuit in standard horn circuit.

Yes

Replace TD ECU. Then recheck system.

TD: Theft Deterrent

L LIGHT RETRACTOR RELAY CIRCUIT

Turn ignition switch off.

TD ECU

Disconnect TD ECU connector and inspect connector on wire harness side as follows.

INSPECT LIGHT RETRACTOR RELAY CIRCUIT
Ground the terminal 20 and check that the headlights and taillights light up.

No →
- Open circuit in light retractor relay circuit.
- Check the light retractor relay.

Yes

Replace TD ECU.

TD: Theft Deterrent

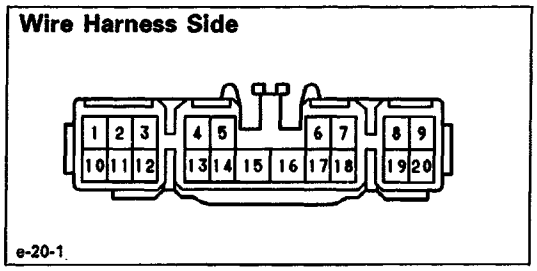

THEFT DETERRENT ECU

THEFT DETERRENT ECU INSPECTION

ECU CIRCUIT

Disconnect the ECU and inspect the connector on the wire harness side as shown in the chart below.

Check for	Tester connection	Condition	Specified value
Continuity	1 – ground	Luggage door unlocked with key	Continuity
		Other position	No continuity
	3 – ground	Driver's door lock lever unlocked	Continuity
		Driver's door lock lever locked	No continuity
	5 – ground	Driver's and passenger's door closed	No continuity
		Others	Continuity
	7 – ground	Constant	Continuity
	10 – ground	Driver's or passenger's door unlocked with key	Continuity
		Others	No continuity
	11 –ground	Driver's or passenger's door locked with key	Continuity
		Others	No continuity
	12 – ground	Passenger's door lock lever unlocked	Continuity
		Passenger's door lock lever locked	No continuity
	*1 13 –ground	Engine hood, front luggage door and rear luggage door closed	No continuity
		Others	Continuity
	*1 14 –ground	Driver's and passenger's door closed	No continuity
		Others	Continuity
	15 – ground	Ignition key set to ignition switch	Continuity
		Ignition key removed from ignition switch	No continuity
	*1 16 – ground	Constant	Continuity
Voltage	6 – ground	Turn ignition switch to ACC or ON	Battery voltage
	8 – ground	Constant	Battery voltage
	9 – ground	Constant	Battery voltage
	17 – ground	Constant	Battery voltage
	18 – ground	(M/T) Turn ignition switch to START with clutch pedal depressed. (A/T) Turn ignition switch to START with shift lever at P or N position	Battery voltage
	20 – ground	Constant	Battery voltage

*1This circuit includes the LED or diode. If the circuit shows no continuity, change the positive and negative probes and recheck the circuit.

If circuit is correct, replace the theft deterrent ECU.

DOOR LOCK SWITCH

DOOR LOCK SWITCH INSPECTION

CONTINUITY

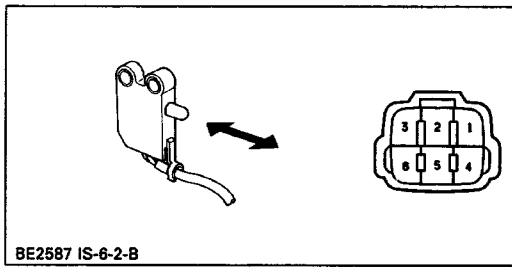

Terminal / Condition	3	6
Door closed (Switch pin pushed in)		
Door opened (Switch pin released)	○	○

If continuity is not as specified, replace the door lock assembly.

DOOR LOCK AND UNLOCK SWITCH

DOOR LOCK AND UNLOCK SWITCH INSPECTION

See Power Door Lock Control Switch on page BE–101.

KEY UNLOCK WARNING SWITCH

KEY UNLOCK WARNING SWITCH INSPECTION

See Key Confine Prevention System on page BE–11.

IGNITION SWITCH

IGNITION SWITCH INSPECTION

See Ignition Switch on page BE–11.

DOOR KEY LOCK AND UNLOCK SWITCH

DOOR KEY LOCK AND UNLOCK SWITCH INSPECTION

See Power Door Lock Control System on page BE–99.

LUGGAGE DOOR KEY UNLOCK SWITCH

LUGGAGE DOOR KEY UNLOCK SWITCH INSPECTION

CONTINUITY

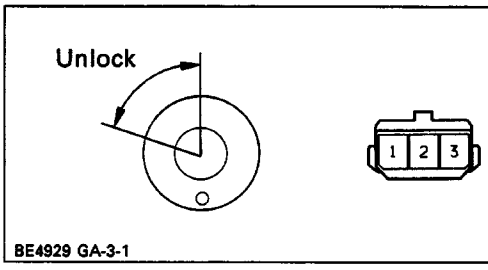

Terminal / Condition	1	3
OFF		
UNLOCK	○	○

ENGINE HOOD COURTESY SWITCH

ENGINE HOOD COURTESY SWITCH INSPECTION

CONTINUITY

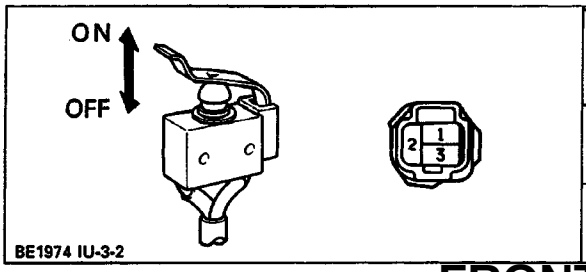

Terminal / Condition	1	2	3
OFF (Closed)			
ON (Opened)	○———	———	———○

FRONT LUGGAGE DOOR COURTESY SWITCH

FRONT LUGGAGE DOOR COURTESY SWITCH INSPECTION

See Engine Hood Courtesy Switch on this page.

DOOR COURTESY SWITCH

DOOR COURTESY SWITCH INSPECTION

See Interior Light System on page BE–49.

REAR LUGGAGE DOOR COURTESY SWITCH

REAR LUGGAGE DOOR COURTESY SWITCH INSPECTION

CONTINUITY

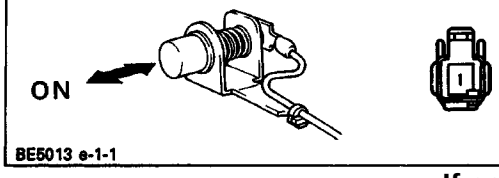

Terminal / Condition	1	Switch Body
OFF (Closed)		
ON (Opened)	○———	———○

If continuity is not as specified, replace the switch.

PARK/NEUTRAL SWITCH

PARK/NEUTRAL SWITCH INSPECTION

See page AX–35.

CLUTCH START SWITCH

CLUTCH START SWITCH INSPECTION

See page CL–5.

STARTER RELAY

STARTER RELAY INSPECTION

See Cruise Control System on page BE–138.

HEADLIGHT CONTROL RELAY

HEADLIGHT CONTROL RELAY INSPECTION

See page BE–30.

TAILLIGHT CONTROL RELAY

TAILLIGHT CONTROL RELAY INSPECTION

See page BE–30.

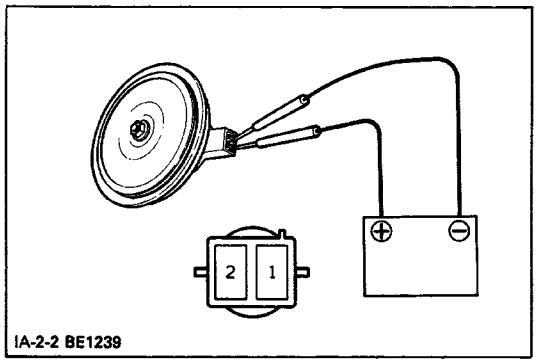

THEFT DETERRENT HORN

THEFT DETERRENT HORN INSPECTION

OPERATION

(a) Connect the positive (+) lead from the battery to terminal 1 and the negative (–) lead to terminal 2.

(b) Check that the horn blows.

If operation is not as specified, replace the horn.

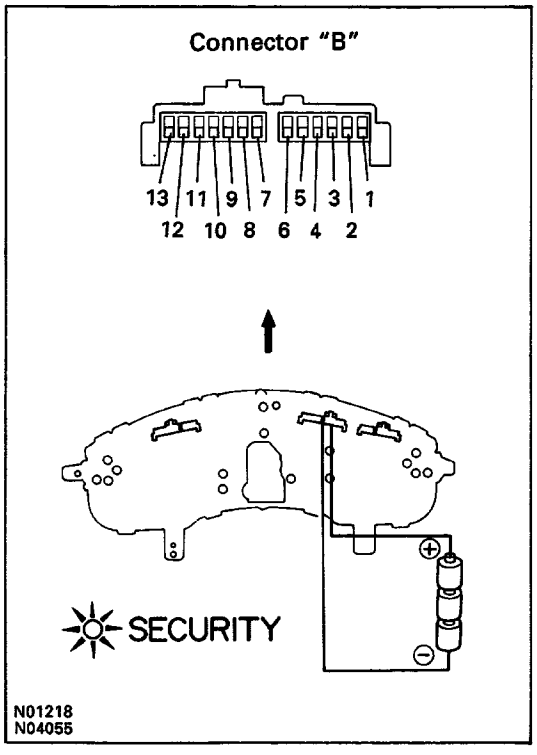

THEFT DETERRENT INDICATOR LIGHT

THEFT DETERRENT INDICATOR LIGHT

INSPECTION

(a) Connect a series of three 1.5 V dry cell batteries.

(b) Connect the positive (+) lead from the dry cell batteries to terminal 5 of connector "B" and the negative (–) lead to terminal 6 of connector "B".

(e) Check that the indicator light lights up.

If the indicator light does not light up, replace the indicator light.

TURN SIGNAL AND HAZARD WARNING SYSTEM

PARTS LOCATION

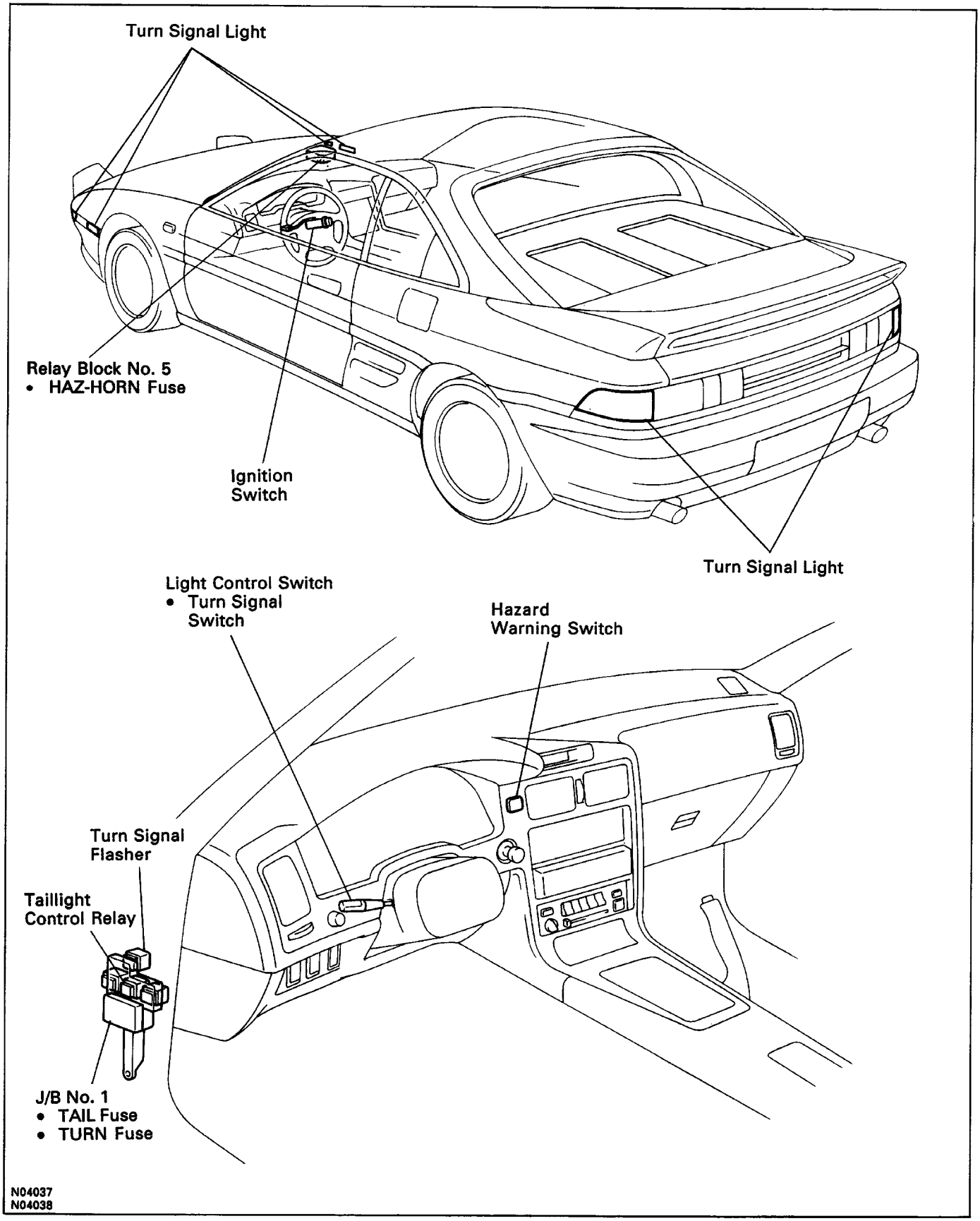

N04037
N04038

WIRING AND CONNECTOR DIAGRAM

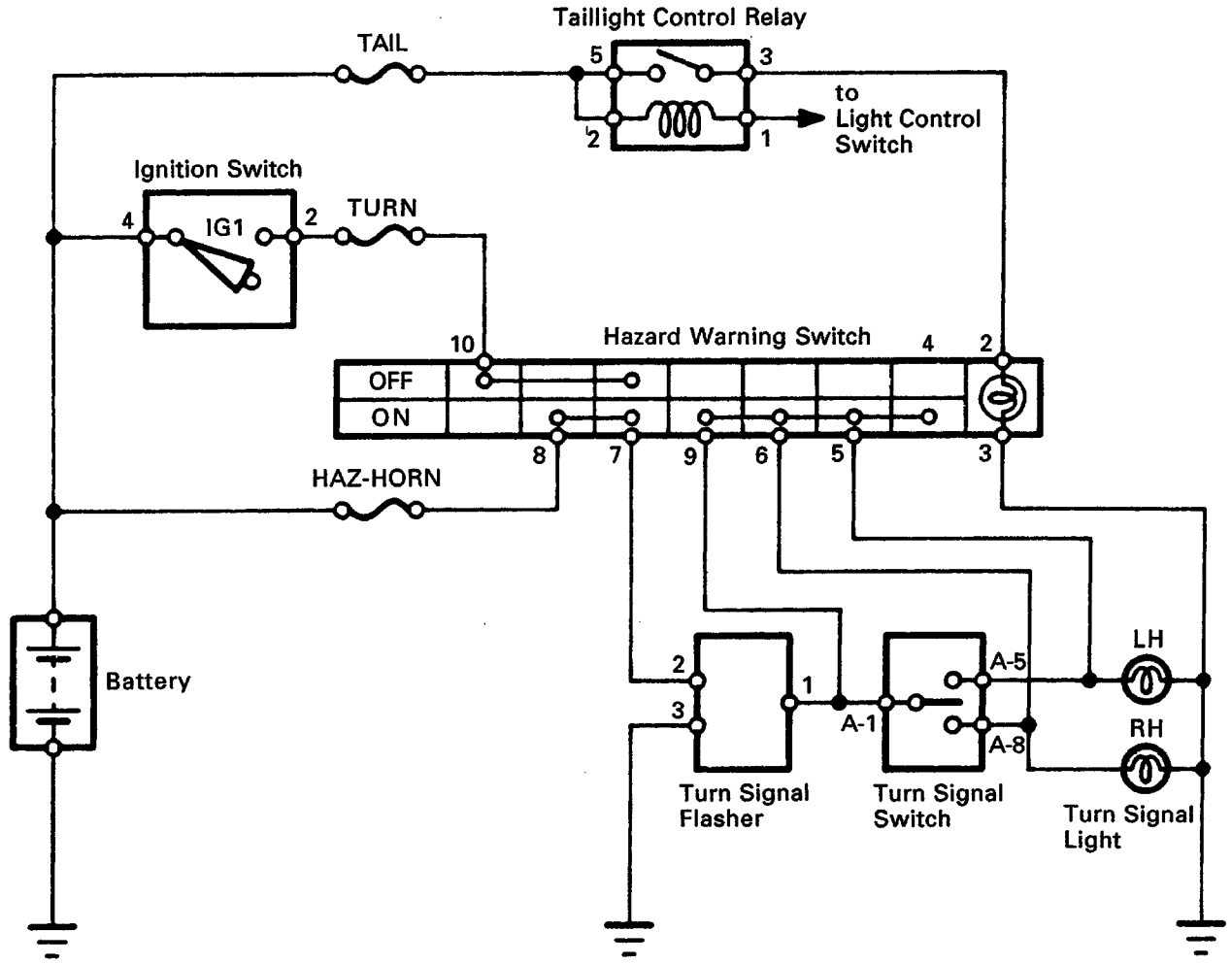

The POWER SOURCE CIRCUIT has been simplified. For full details, see page BE-9.

BE5067

Ignition Switch

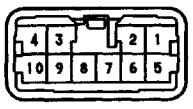

g-10-2-B

Taillight Control Relay

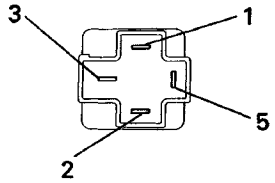

BE4049

Hazard Warning Switch

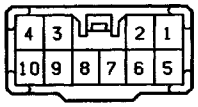

S-10-2

Turn Signal Flasher

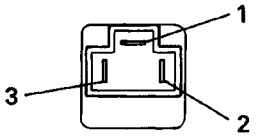

BE2896

Turn Signal Switch

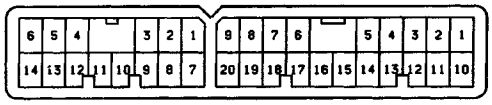

Connector "A" Connector "B"

V-34-2

TROUBLESHOOTING

You will find the cause of troubles more easily using the table shown below. In this table, the numbers indicate the order priority of the causes in trouble. Check each part in the order shown. If necessary, replace the parts.

See page / Part name / Trouble	BE–3 HAZ–HORN Fuse	BE–3 TURN Fuse	BE–11 Ignition Switch	BE–45 Hazard Warning Switch	BE–45 Turn Signal Flasher	BE–30 Turn Signal Switch	– Wire Harness	– Bulb
”Hazard” and ”Turn” do not light up.				1	2		3	
The flashing frequency is abnormal.					2		3	1
Hazard warning light does not light up. (Turn is normal.)	1						2	
Hazard warning light does not light up in one direction.				1			2	
*1 Turn signal does not light up.		2	1			3	4	
*2 Turn signal does not light up.		1				2	3	
Turn signal does not light up in one direction.						1	2	
Only one bulb does not light.							2	1

Combination Meter, Wiper and Washer do not operate.
Combination Meter, Wiper and Washer are normal.

TURN SIGNAL SWITCH

TURN SIGNAL SWITCH INSPECTION

See combination switch on page BE–30.

HAZARD WARNING SWITCH

HAZARD WARNING SWITCH INSPECTION

CONTINUITY

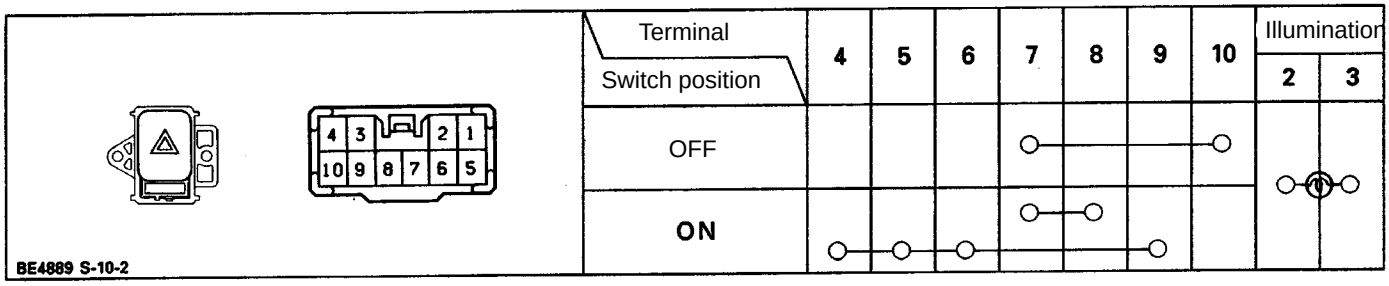

Terminal / Switch position	4	5	6	7	8	9	10	Illumination 2	Illumination 3
OFF				○			○	○	○
ON	○	○	○	○		○			

If continuity is not as specified, replace the switch.

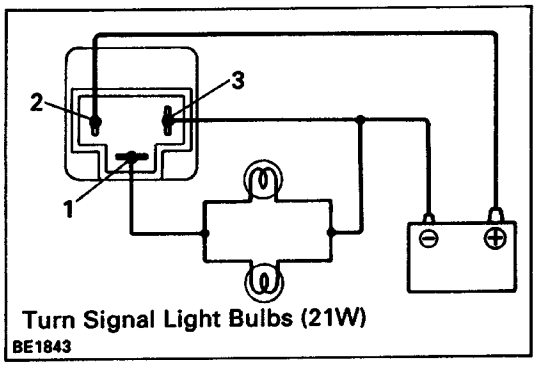

TURN SIGNAL FLASHER

TURN SIGNAL FLASHER INSPECTION

OPERATION

(a) Connect the positive (+) lead from the battery to terminal 2 and the negative (–1 lead to terminal 3.

(b) Connect the two turn signal light bulbs parallel to each other to terminals 1 and 3, check that the bulbs flash.

HINT: The turn signal lights should flash 60 to 120 times per minute.
If one of the front or rear turn signal lights has an open circuit, the flash rate will be more than 140 times per minute.
If operation is not as specified, replace the flasher.

WIPER AND WASHER SYSTEM

PARTS LOCATION

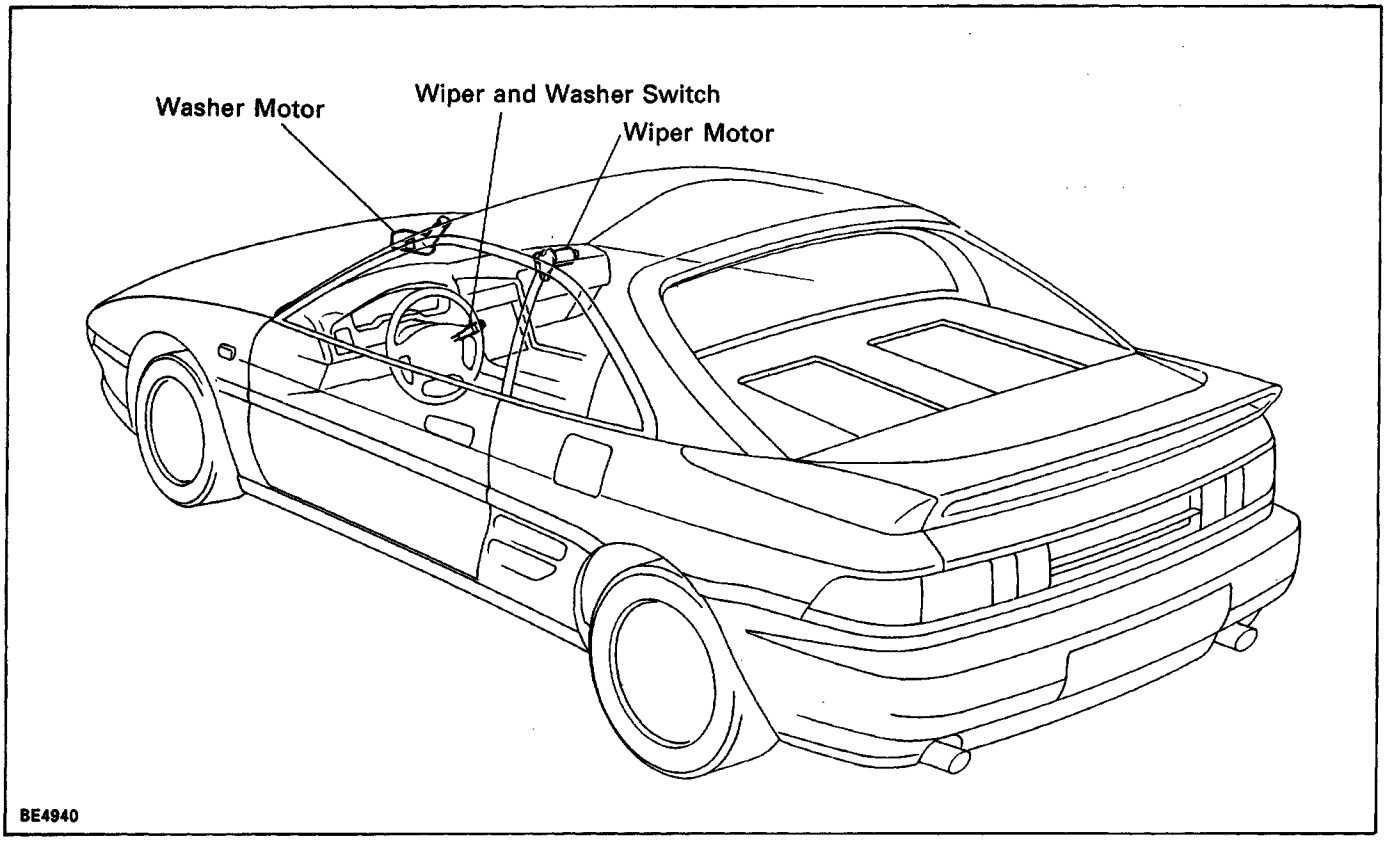

WIRING DIAGRAM

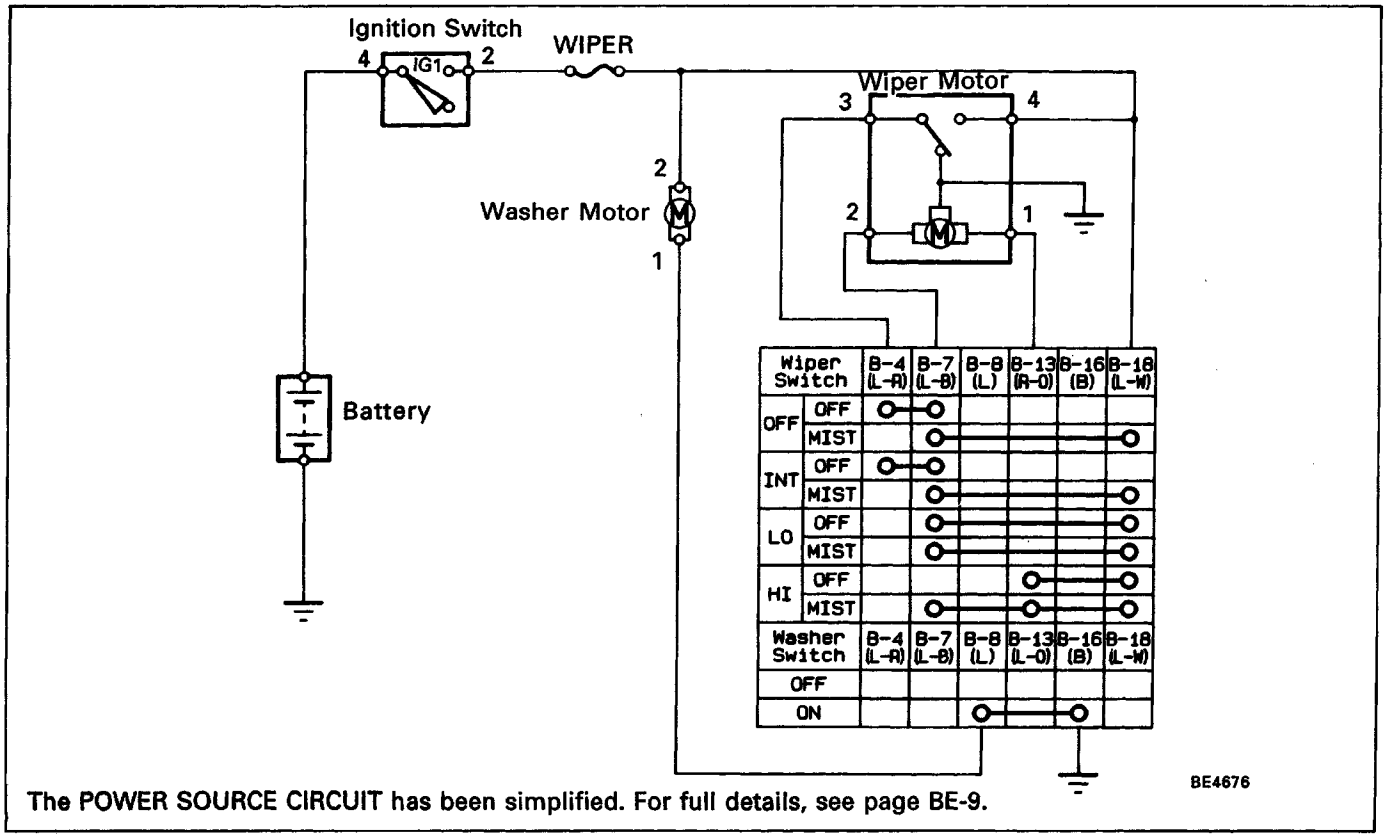

The POWER SOURCE CIRCUIT has been simplified. For full details, see page BE-9.

CONNECTOR DIAGRAMS

Ignition Switch

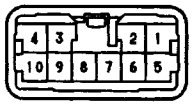

g-10-2-B

Wiper Motor

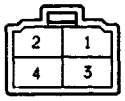

H-4-2

Wiper and Washer Switch

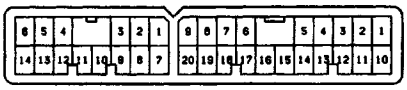

Connector"A" Connector "B"

V-34-2

Washer Motor

(All vehicles for CANADA.
USA vehicles w/ Cold Area Spec.)



BE4107

(USA vehicles w/o Cold Area Spec.)



IS-2-2-E

TROUBLESHOOTING

You will find the troubles easier using the table well shown below. In this table, each number shows the priority of causes in troubles. Check each part in order. If necessary, replace these parts.

See page / Part name / Trouble	BE–11 Ignition Switch	BE–3 WIPER Fuse	BE–62 Wiper and Washer Switch	**BE–64** Wiper Motor	I Washer Hose and Nozzle	I Wire Harness	BE–65 Washer motor
Wipers do not operate or return to OFF position.	**2**	**1**	**3**	**4**		**5**	
Wipers do not operate in INT position.			**1**	**2**		**3**	
Washers do not operate.			**1**		**2**	**4**	**3**

PARTS REPLACEMENT

See Combination Switch on page BE–26**.**

COMBINATION SWITCH

COMBINATION SWITCH REMOVAL

See page BO–72.

COMBINATION SWITCH INSTALLATION

See page BO–72.

COMBINATION SWITCH DISASSEMBLY

See page BE–28.

COMBINATION SWITCH ASSEMBLY

See page BE–29.

COMBINATION SWITCH INSPECTION

INSPECTION WIPER AND WASHER SWITCH CONTINUITY

Inspect the switch continuity between terminals.

Terminal (Color) / Switch position			B–4 (L–R)	B–7 (L–B)	B–8 W	B–13 (R–Q)	B–16 I6Y	e–1s (L–W)
Wiper	OFF	OFF	○	○				
		MIST		○				○
	INT	OFF	○	○				
		MIST		○				○
	LO	OFF		○				○
		MIST		○				○
	HI	OFF				○		○
		MIST		○		○		○
Washer	OFF							
	ON				○		○	

If continuity is not as specified, replace the switch.

INTERMITTENT WIPER OPERATION

(a) Turn the wiper switch to INT position.
(b) (Variable Type)
Turn the Intermittent time control switch to FAST position.
(c) Connect the positive (+) lead from the battery to terminal B–18 and the negative (–) lead to terminal B–16.
(d) Connect the positive (+) lead from the battery to terminal B–18 and the negative (–) lead to terminal B–16, check that the meter needle indicates battery voltage.

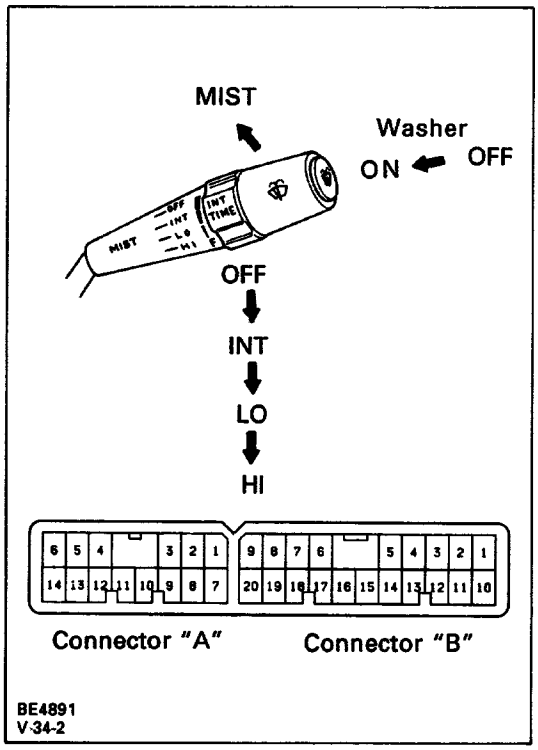

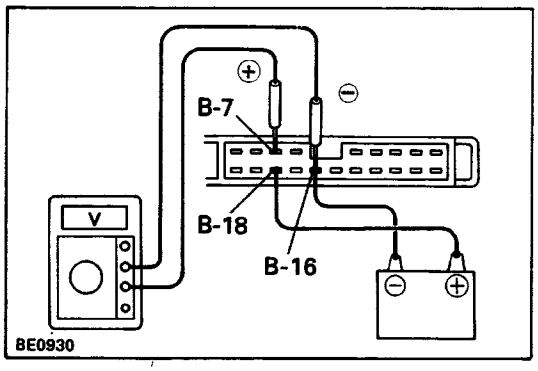

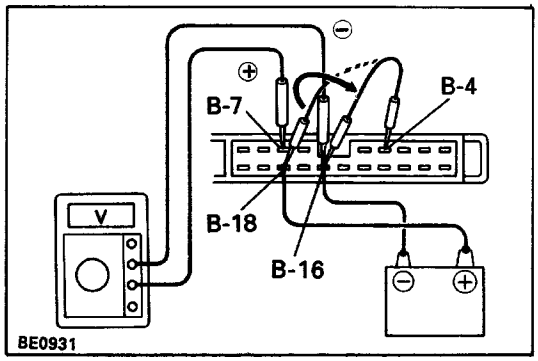

(e) After connecting terminal B–4 to terminal B–18, connect to terminal B–16.
Then, check that the voltage rises from 0 volts to battery voltage within the times as shown in the table.

INT time control switch position	Voltage
FAST	1.6 ± 1 sec. — Battery voltage / 0 volts
SLOW	10.7 ± 5 sec. — Battery voltage / 0 volts
Non variable type	3.3 ± 1 sec. — Battery voltage / 0 volts

If operation is not as specified, replace the switch.

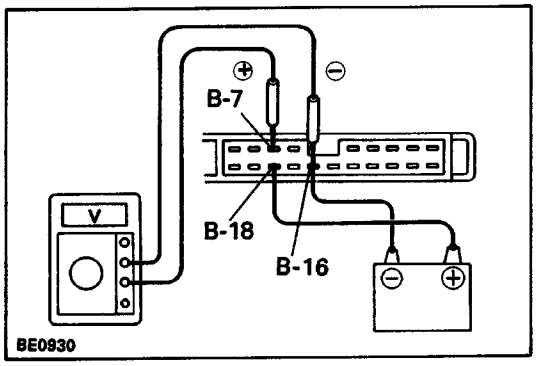

WASHER LINKED WIPER OPERATION

(a) Connect the positive (+) lead from the battery to terminal B–18 and the negative (–) lead to terminal B–16.
(b) Connect the positive (+) lead from the voltmeter to terminal B–7 and the negative (–) lead to terminal B–16.
(c) Push in the washer switch. Check that the voltage changes as shown in the table.

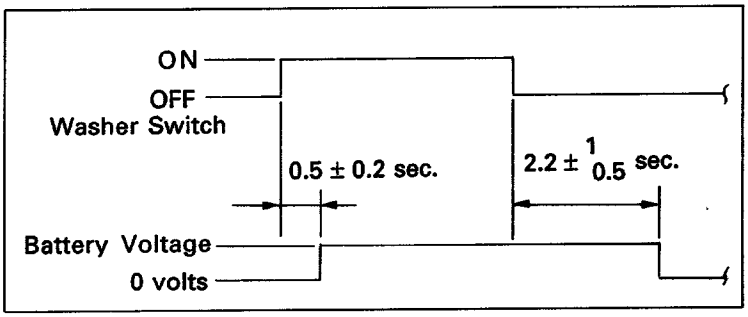

If operation is not as specified, replace the switch.

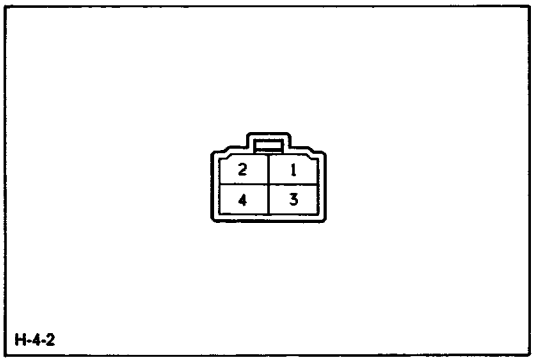

WIPER MOTOR

WIPER MOTOR INSPECTION

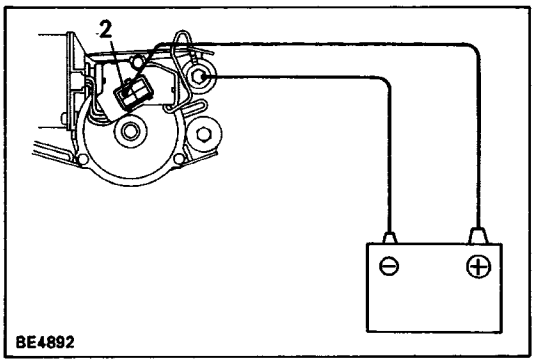

OPERATION AT LOW SPEED

Connect the positive (+) lead from the battery to terminal 2 and the negative (–) lead to the motor body, check that the motor operates at low speed.
If operation is not as specified, replace the motor.

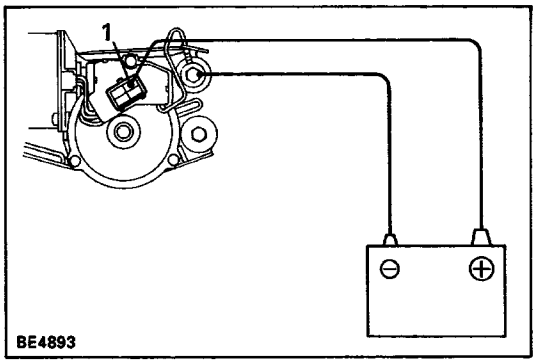

OPERATION AT HIGH SPEED

Connect the positive (+) lead from the battery to terminal 1 and the negative (–) lead to the motor body, check that the motor operates at high speed.
If operation is not as specified, replace the motor.

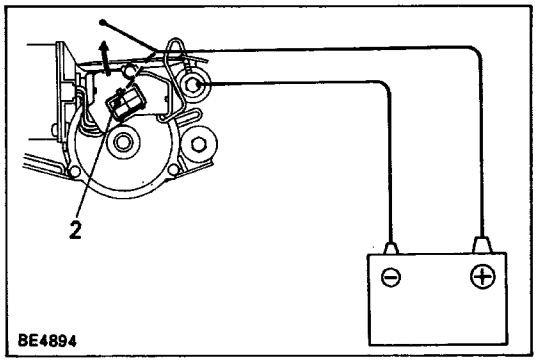

OPERATION, STOPPING AT STOP POSITION

(a) Operate the motor at low speed and stop the motor operation anywhere except at the stop position by disconnecting positive W lead from terminal 2.

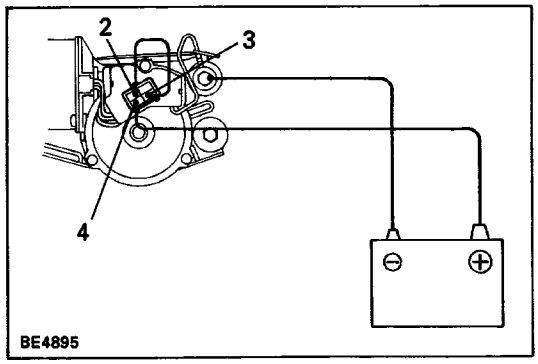

(b) Connect terminals 2 and 3.

tcy Connect the positive (+) lead from the battery to terminal 4 and the negative (–) lead to the motor body, check that the motor stops running at the stop position after the motor operates again. If operation is not as specified, replace the motor.

WASHER SWITCH

WASHER SWITCH INSPECTION

See (Wiper and Washer Switch/Continuity) on page BE–62.

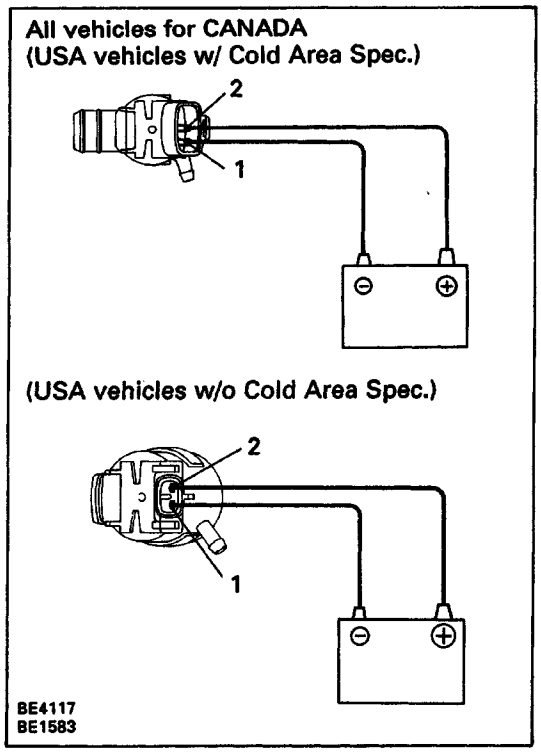

WASHER MOTOR

WASHER MOTOR INSPECTION

Connect the positive (+) lead from the battery to terminal 2 and the negative (–) lead to terminal 1, check that the motor operates.

NOTICE: These tests must be performed quickly (within 20 seconds) to prevent the coil from burning out.

If operation is not as specified, replace the motor.

ABS ACTUATOR

ABS ACTUATOR REMOVAL AND INSTALLATION

BR07F–01

Remove and install the parts as shown.

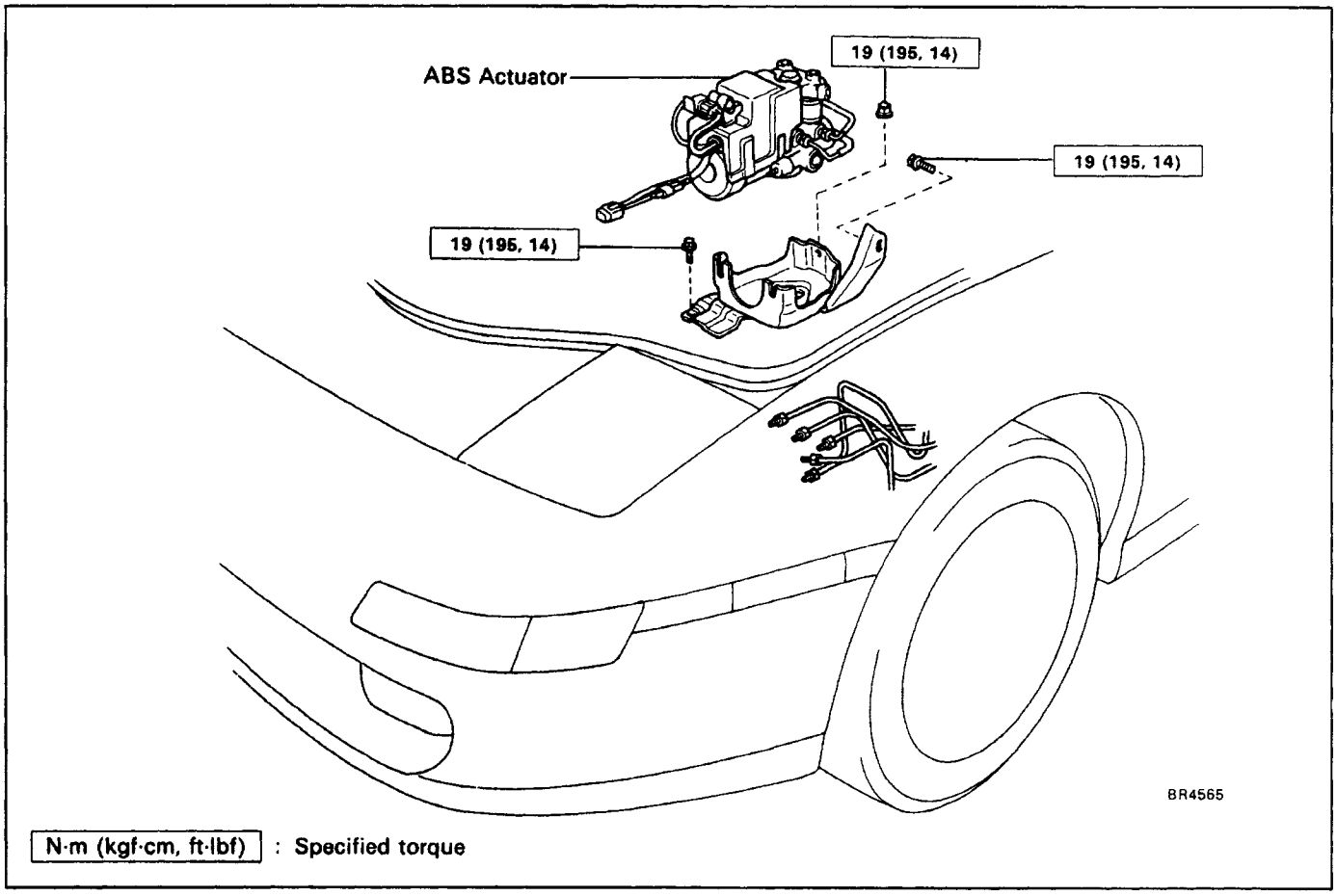

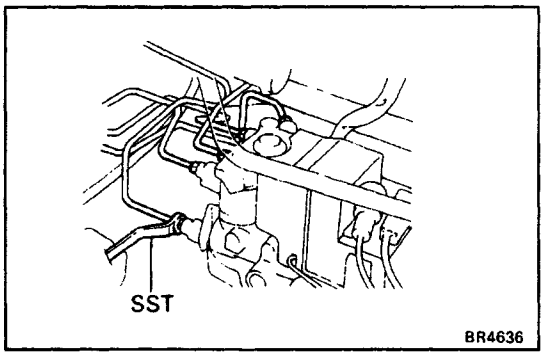

1. DISCONNECT AND CONNECT BRAKE TUBE

Using SST, disconnect and connect the brake tubes from/to the ABS actuator.

SST 09751 – 36011

Torque: 15 N–m (155 kgf–cm, 11 ft–lbf)

2. FILL BRAKE RESERVOIR WITH BRAKE FLUID AND BLEED BRAKE SYSTEM

(See page BR–9)

ABS ACTUATOR DISASSEMBLY AND ASSEMBLY

BR07G–01

Remove and install the parts as shown.

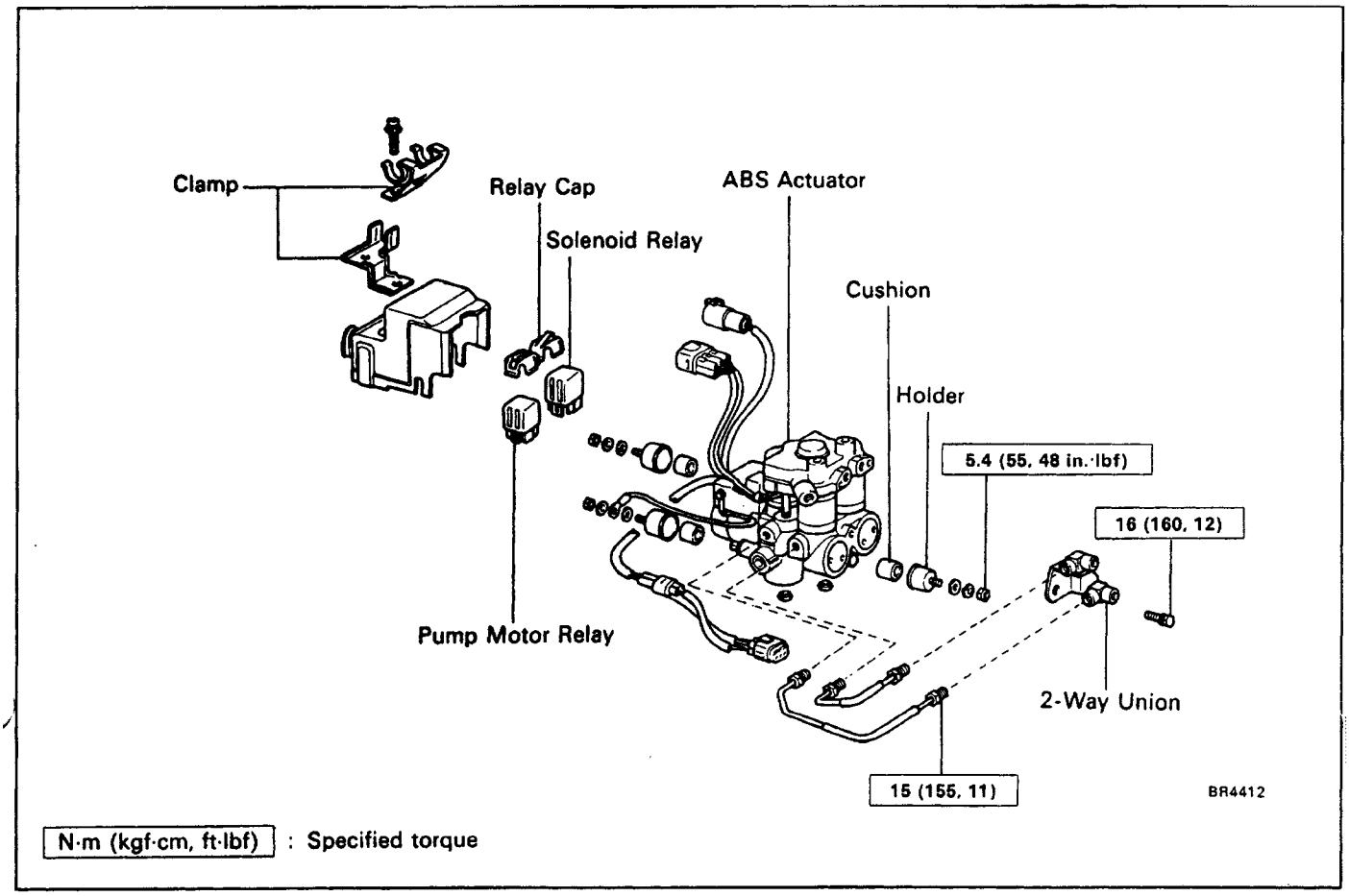

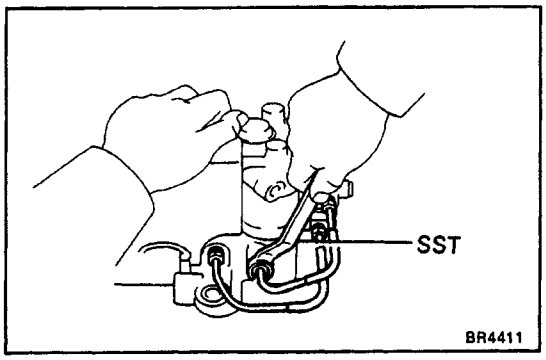

(MAIN POINT OF REMOVAL AND INSTALLATION)

1. DISCONNECT AND CONNECT BRAKE TUBE

Using SST, disconnect and connect the brake tubes from/to the ABS actuator.

SST 09751–3601 1

Torque: 15 N–m (155 kgf–cm, 11 ft–lbf)

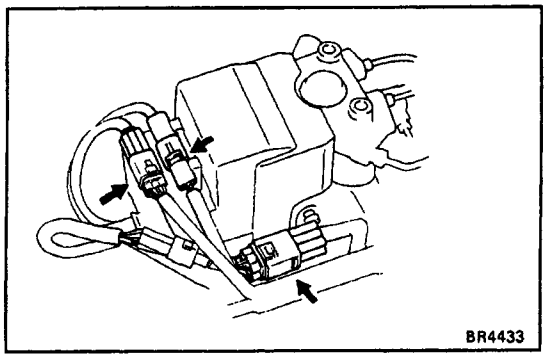

ABS ACTUATOR OPERATION INSPECTION

1. INSPECTION BATTERY VOLTAGE

Battery voltage: 10–14.5 V

2. DISCONNECT CONNECTORS

Disconnect the three connectors from the actuator as shown.

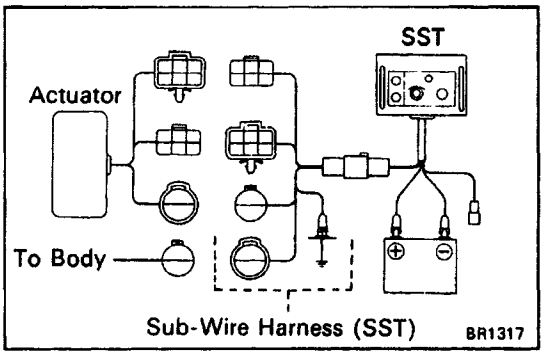

3. CONNECT ACTUATOR CHECKER (SST) TO ACTUATOR

(a) Connect the actuator checker (SST) to the actuator and body side wire harness through the sub–wire harness (SST) as shown.
SST 09990–00150

(b) Connect the red cable of the checker to the battery positive (+) terminal and black to the negative (–) terminal. Connect the black cable of the sub–wire harness to the battery negative (–) terminal or body-ground.

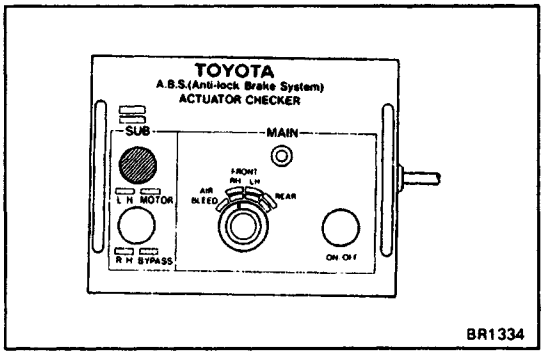

4. INSPECT BRAKE ACTUATOR OPERATION

(a) Start the engine, and run it at idle.

(b) Turn the MAIN selector switch of the actuator checker to "FRONT RH" position.

(c) Push and hold in the SUB MOTOR switch for a few seconds.

(d) Depress the brake pedal and hold it until step (g) is completed.

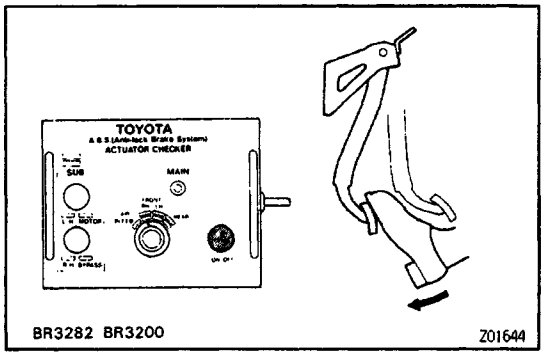

(e) Push the MAIN push switch and check that the brake pedal does not go down.

NOTICE: Do not keep the MAIN push switch pushing more than 10 seconds.

(f) Release the switch, and check that the pedal go down.

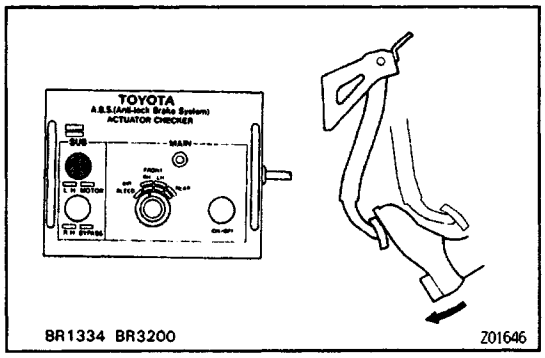

(g) Push and hold in the SUB MOTOR switch for a few seconds, and check that the pedal returns.

(h) Release the brake pedal.

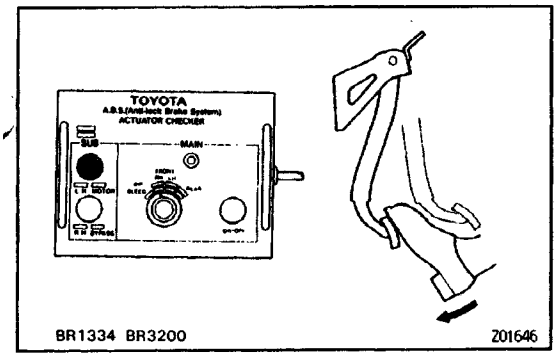

(i) Push and hold in the SUB MOTOR switch for a few seconds.

(j) Depress the brake pedal and hold it for about 15 seconds. As you hold the pedal down, push the SUB MOTOR switch for a few seconds. Check that the brake pedal not pulsate.

5. INSPECT FOR OTHER WHEELS

(a) Turn the MAIN selector switch to ”FRONT LH” posi–tion.

(b) Repeating (c) to (j) of the step 4, check the actuator operation similarly.

(c) Similarly, inspect ”REAR” position.

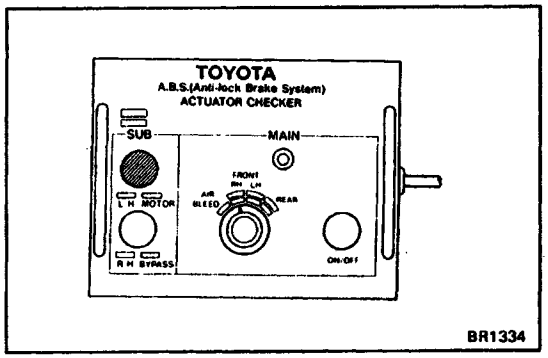

6. PUSH SUB MOTOR SWITCH

Push and hold in the SUB MOTOR switch for– a few seconds.

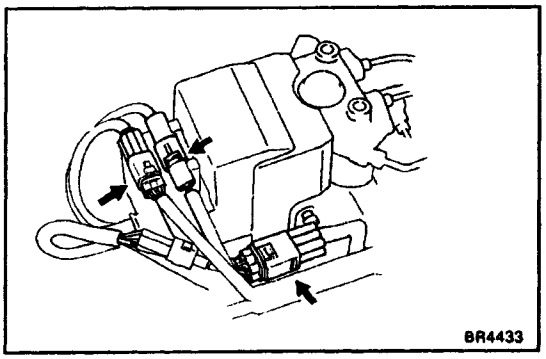

7. DISCONNECT ACTUATOR CHECKER (SST) FROM ACTUATOR

(a) Disconnect the actuator (SST) and sub–wire harness (SST) from the actuator.
SST 09990–00150

(b) Connect the actuator connectors.

(c) Clear the diagnostic codes.
(See page BR–55)

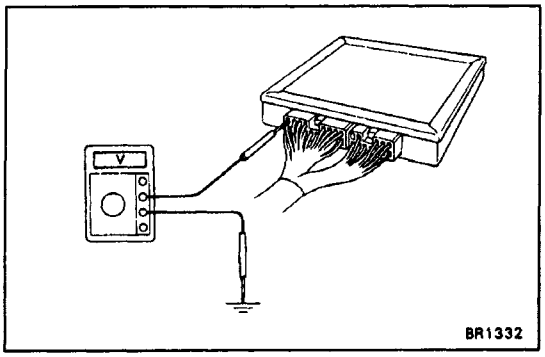

ANTI–LOCK BRAKE SYSTEM CIRCUIT

BR07R–01

SYSTEM CIRCUIT INSPECTION

1. INSPECT SYSTEM CIRCUIT WITH CONNECTOR CONNECTED

(a) Remove the ABS ECU.

(b) Using a voltmeter with high impedance (10 kΩ/V minimum),measure the voltage at each terminal an body ground.

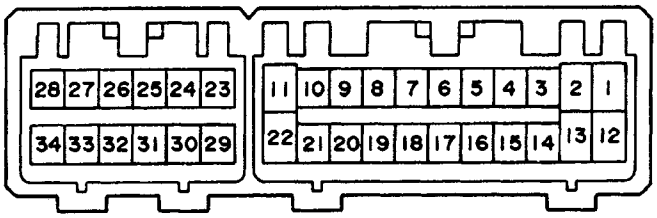

Tester Connection	Check Item	Condition	Specified Value	Trouble Part
IG	Voltage	IG switch on	Battery voltage	ECU–IG Fuse
R L–	Continuity	IG switch off	Continuity	ABS ECU
STP	Voltage	IG switch off and brake pedal depressed	Battery voltage	Stop light switch Stop light
	Continuity	IG switch off and brake pedal returned.	Continuity	
BAT	Voltage	IG switch off	Battery voltage	ECU + B Fuse
EX	Voltage	IG switch on	Battery voltage	ABS ECU. EFI ECU
RSS	Continuity	IG switch off	Continuity	ABS ECU
RR–	Continuity	IG switch off	Continuity	ABS ECU
WA	Voltage	IG switch on and "ABS" warning light goes on	About OV.	ABS ECU "'ABS" warning light
		IG switch on and "ABS" warning light goes off	Battery voltage	
PK6	Voltage	IG switch on and PKB lever pulled	About OV	Parking brake switch Level warning switch
		IG switch on and PKB lever returned	Battery voltage	
SFR	Voltage	IG switch on and "ABS"warning light goes on	About OV	Actuator
		IG switch on and "A6S" warning light goes off	Battery voltage	
TS	Voltage	IG switch on and check connector Ts–E, not connected	Battery voltage	ABS ECU
		IG switch on and check connector Ts–E, connector	About OV	
FR–	Continuity	IG switch off	Continuity	
R-	Continuity	IG switch off	Continuity	ABS ECU
SR	Voltage	!G switch on and "ABS" warning light goes on	About OV	
		IG switch on and "A6S" warning light goes off	Battery voltage	
GND	Continuity	IG switch off	Continuity	Wiring harness
SFL	Voltage	IG switch on and "ABS" warning light goes on	About OV	Actuator
		IG switch on and "ABS" warning light goes off	Battery voltage	

V01021

Tester Connection	Check Item	Condition	Specified Value	Trouble Part
TC	Voltage	IG switch on and check connector Tc–E, not connected	Battery voltage	ABS ECU
		IG switch on and check connector Tc–E, connected	About OV	
AST	Voltage	IG switch on and "ABS" warning light goes on	About OV	Actuator
		IG switch on and "ABS" warning light goes off	Battery voltage	
F L–	Continuity	IG switch off	Continuity	A6S ECU
FSS	Continuity	IG switch off	Continuity	
SRR	Voltage	IG switch on and "ABS" warning light goes on	About OV	Actuator
		IG switch on and "ABS" warning light goes off	Battery voltage	

If the circuit is not as specified, check and repair or replace the trouble part shown in the table above.

V01022

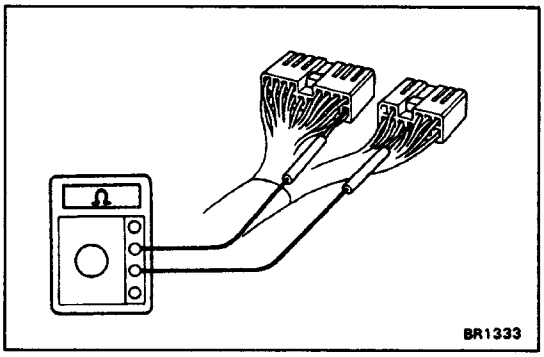

2. INSPECT SYSTEM CIRCUIT WITH CONNECTOR DISCONNECTED

(a) Disconnect the connectors from the ECU, inspect at the wire harness side connector.

Tester Connection	Check Item	Specified Value	Trouble Part	Tester Connection	Check Item	Specified Value	Trouble Part
RR+ ↔ RR–	Resistance	0.9 ~ 1.5 kΩ	Rear RH speed sensor	SFL ↔ AST	Resistance	About 6 Ω	Actuator
RL+ ↔ RL–	Resistance	0.9 ~ 1.5 kΩ	Rear LH speed sensor	AST ↔ Body ground	Resistance	About 5 Ω	Actuator
SFR ↔ AST	Resistance	About 6 Ω	Actuator	FR+ ↔ FR–	Resistance	0.8 ~ 1.5 Ω	Front R H speed sensor
MT ↔ Body ground	Resistance	About 5 Ω	Actuator	MR ↔ R–	Resistance	50 ~ 80 Ω	Control relay
FL+ ↔ FL–	Resistance	0.8 ~ 1.5 kΩ	Front LH speed sensor	SRR ↔ AST	Resistance	About 6 Ω	Actuator
SR ↔ R–	Resistance	60 ~ 100 Ω	Control relay				

If the circuit is not as specified, check and repair or replace the trouble part shown in the table above.

V01023

(b) Connect the connectors, and install the ECU in place.

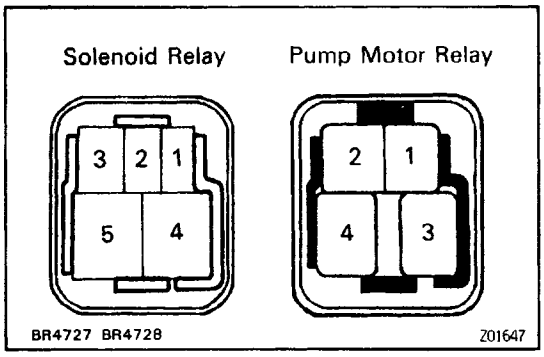

CONTROL RELAY

BR07J–01

CONTROL RELAY INSPECTION

1. REMOVE CONTROL RELAYS

Remove the two control relays from the actuator.

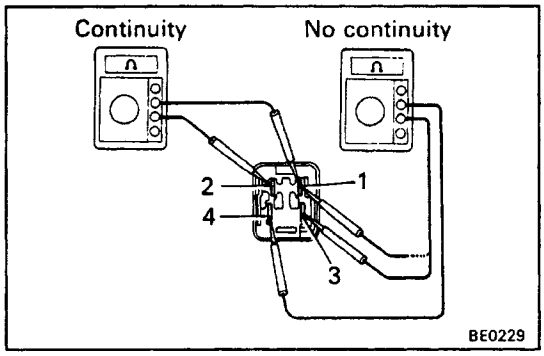

2. INSPECT PUMP MOTOR RELAY CONTINUITY

(a) Check that there is continuity between terminals 1 and 2.

(b) Check that there is no continuity between terminals 3 and 4.

(c) Check that there is no continuity between terminals 1 and 4.

If continuity is not as specified, replace the relay.

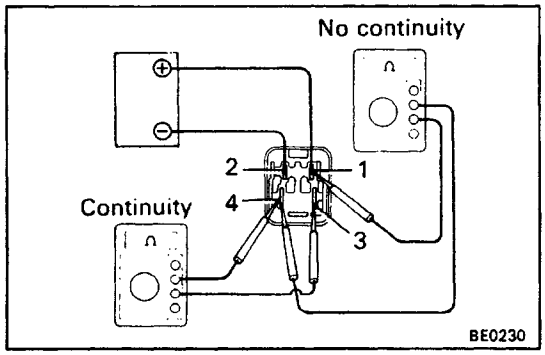

3. INSPECT PUMP MOTOR RELAY OPERATION

(a) Apply battery voltage to terminals 1 and 2.

(b) Check that there is continuity between terminals 3 and 4.

(c) Check that there is no continuity between terminals 1 and 4.

If operation is not as specified, replace the relay.

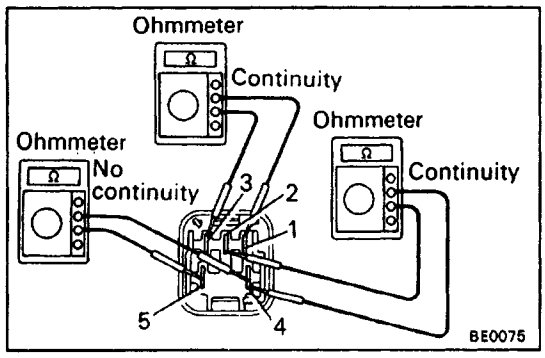

4. INSPECT SOLENOID RELAY CONTINUITY

(a) Check that there is continuity between terminals 1 and 3.

(b) Check that there is continuity between terminals 2 and 4.

(c) Check that there is no continuity between terminals 4 and 5.

If continuity is not as specified, replace the relay.

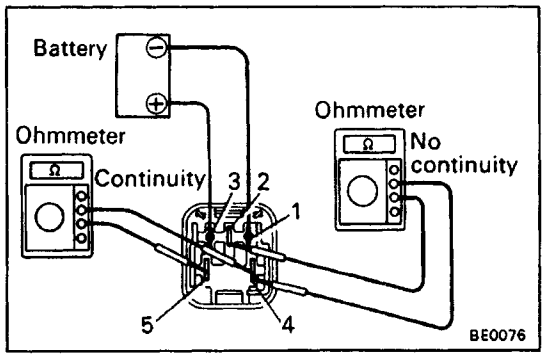

5. INSPECT SOLENOID RELAY OPERATION

(a) Apply battery voltage to terminals 1 and 3.

(b) Check that there is continuity between terminals 4 and 5.

(e) Check that there is no continuity between terminals 2 and 4.

If operation is not as specified, replace the relay.

6. INSTALL TWO CONTROL RELAYS

ANTI–LOCK BRAKE SYSTEM (ABS)

DESCRIPTION

The ABS is a brake system which controls the brake cylinder hydraulic pressure of all four wheels during sudden braking and braking on slippery road surfaces, preventing the wheels from locking. This ABS provides the following benefits:

(1) Enables steering round an obstacle with a greater degree of certainty even when panic braking.

(2) Enables stopping in a panic brake while keeping the effect upon stability and steerability to a minimum, even on curves. . .

The function of the ABS is to help maintain directional stability and vehicle steerability on most road conditions. However, the system cannot prevent the vehicle from skidding if the cornering speed limit is exceeded.

In case a malfunction occurs, a diagnosis function and fail–safe system have been adopted for the ABS to increase serviceability.

BR072–01

COMPONENTS FUNCTION

Component	Function
Front Speed Sensor	Detect the wheel speed of each of the left and right front wheels.
Rear Speed Sensor	Detect the wheel speed of each of the left and right rear wheels.
A6S Warning Lamp	Lights up to alert the driver when trouble has occurred in the Anti – Lock Brake System.
Actuator	Controls the brake fluid pressure to each disc brake cylinder through signals from the computer.
ABS ECU	From the wheel speed signals from each sensor, it calculates acceleration, deceleration and slip values and sends signals to the actuator to control brake fluid pressure.

SYSTEM PARTS LOCATION

BR073–01

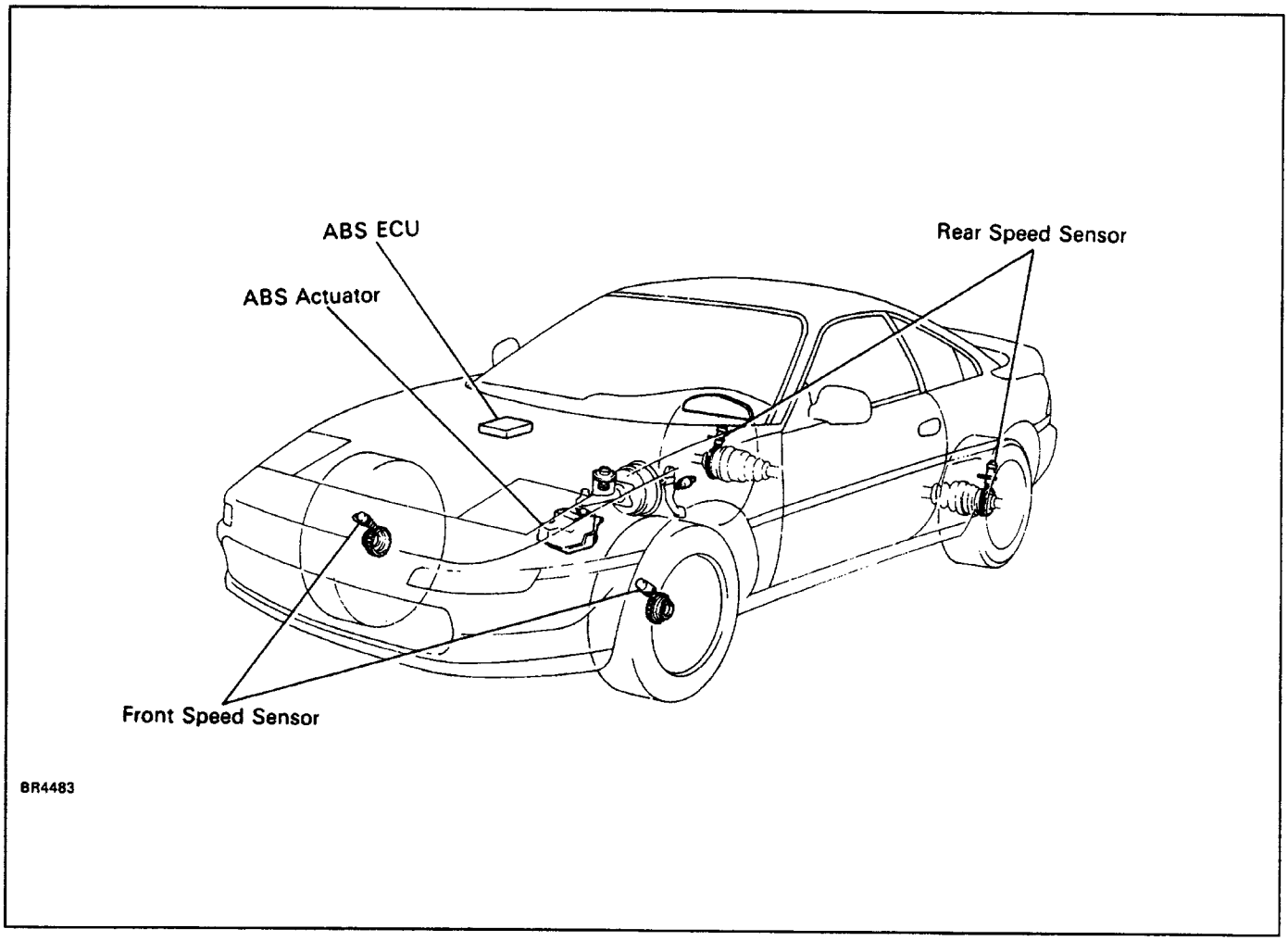

WIRING DIAGRAM

8R074–01

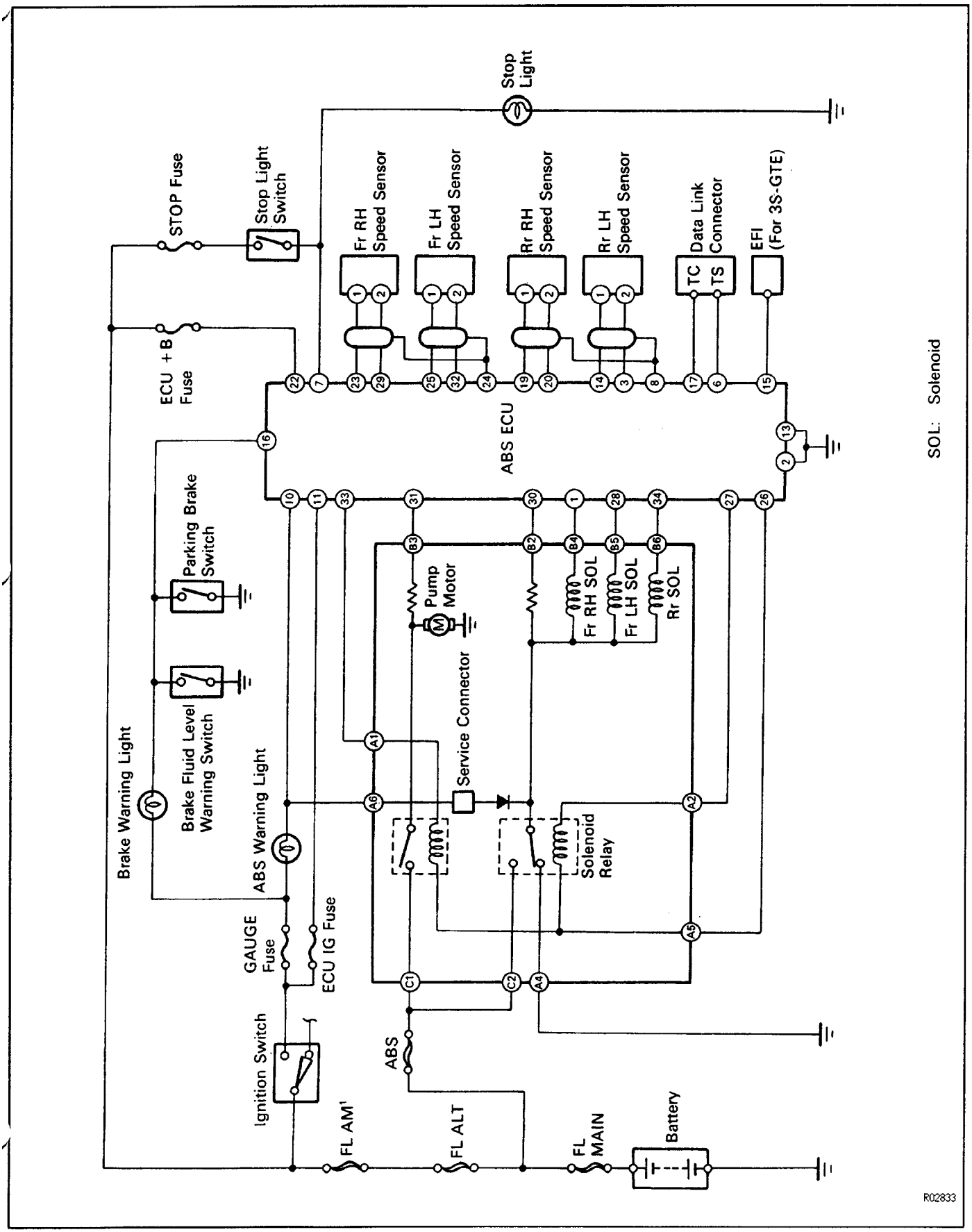

BR075–01

CONNECTORS

ABS Actuator

CONNECTOR A

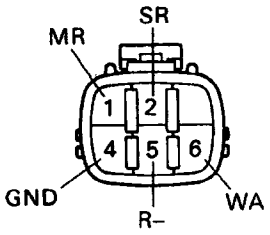

CONNECTOR B

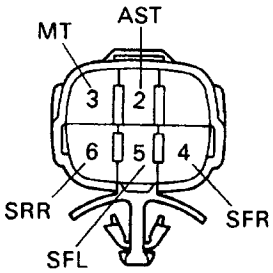

CONNECTOR C

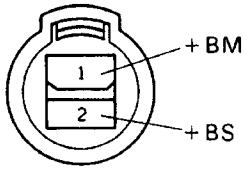

Front Speed Sensor (LH)

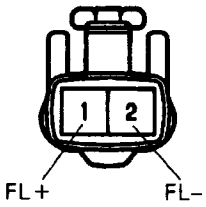

Front Speed Sensor (RH)

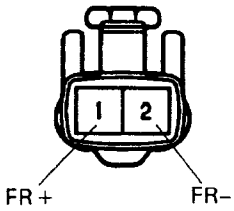

Rear Speed Sensor (LH)

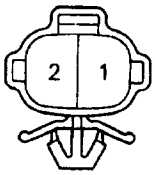

Rear Speed Sensor (RH)

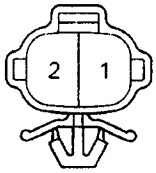

ABS ECU

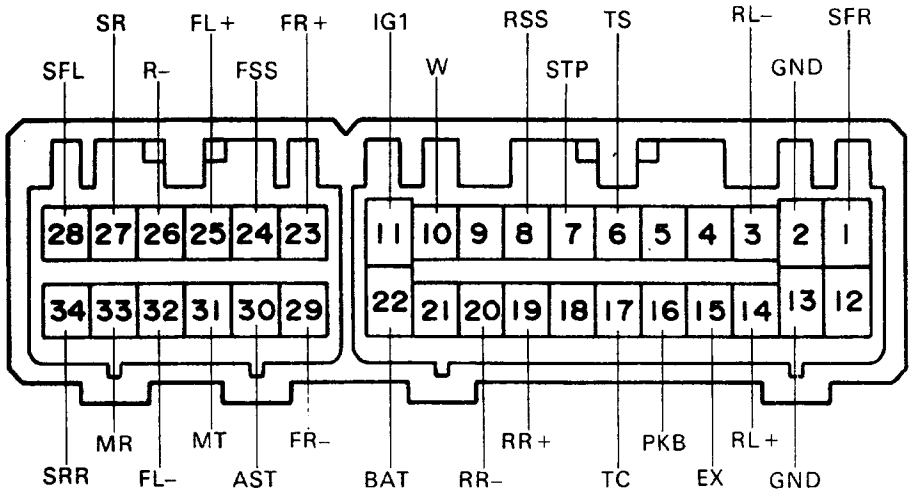

BR4625 BR4626 ID-2-2
le-2-1-T le-2-1-T
R01164 R01164
R02748

Z02602

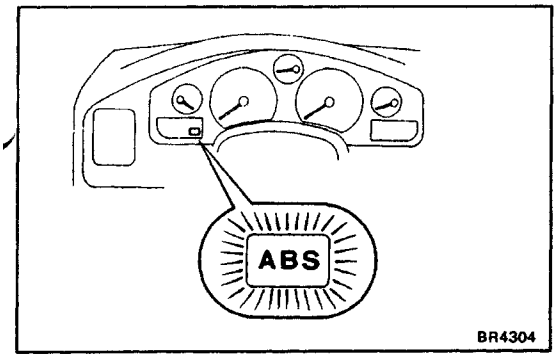

DIAGNOSIS SYSTEM

BR076–01

DESCRIPTION

If a malfunction occurs, the system will identify the problem and the ECU will stores the codes for the trouble items.
At the same time, the system informs the driver of a malfunction via the ”ABS” warning light in the com–bination meter.
To identify the trouble by the number of blinks (di–agnostic code) of the warning light turn on the ignition switch, disconnect the service connector, and use SST to connect Tc and E1 of the data link connector.
In the event of two codes, that having the smallest number (code) will be identified first.
HINT: The warning light does not show the diagnostic codes while the vehicle is running.

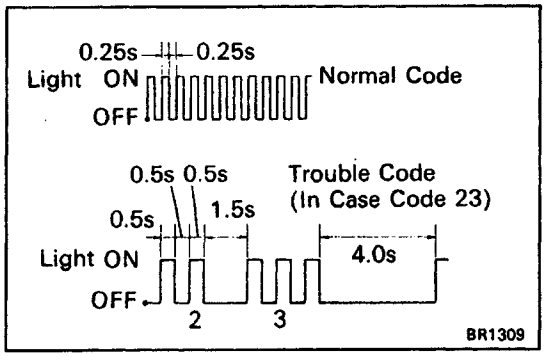

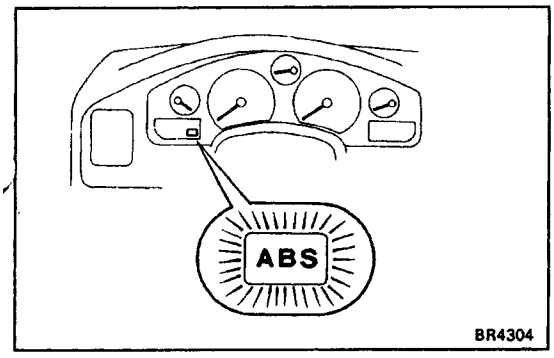

BR077–01

DIAGNOSIS SYSTEM INSPECTION

1. INSPECT BATTERY VOLTAGE

Inspect that the battery voltage is about 12 V.

2. CHECK THAT WARNING LIGHT TURNS ON

(a) Turn the ignition switch on.
(b) Check that the ”ABS” warning light turns on for 3 seconds.
If not, inspect and repair or replace the fuse, bulb and wire harness.

3. REAR DIAGNOSTIC CODE

(a) Turn the ignition switch on.
(b) Disconnect the service connector.

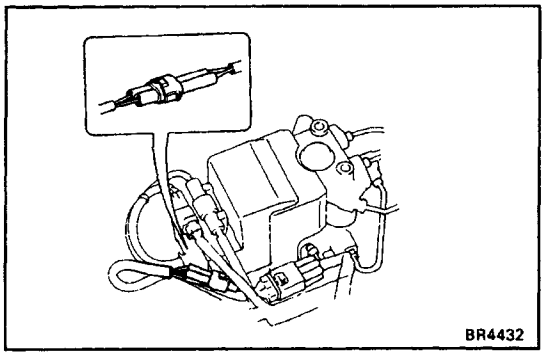

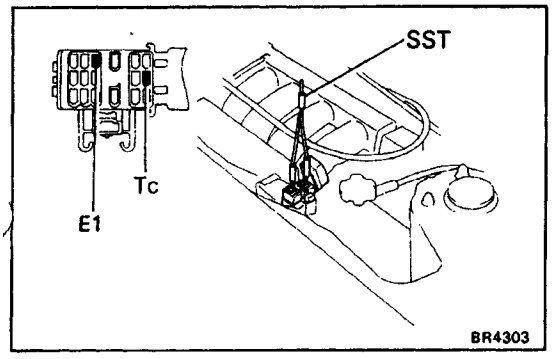

(c) Using SST, connect terminals Tc and E1 of the data link connector.
SST 09843–18020

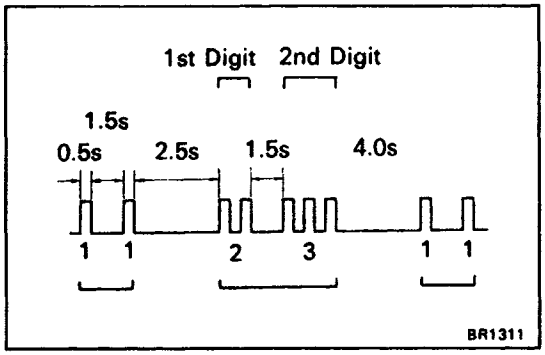

(d) In event of a malfunction, 4 seconds later the warning light will begin to blink. Read the number of blinks. (See DIAGNOSTIC CODE on page **BR–55**)

HINT: The first number of blinks will equal the first digit of a two digit diagnostic code. After a 1.5 second pause, the 2nd number of blinks will equal the 2nd number of a two digit code. If there are two or more codes, there will be a 2.5 second pause between each, and indication will begin after 4.0 second pause from the smaller value and continue in order to larger.

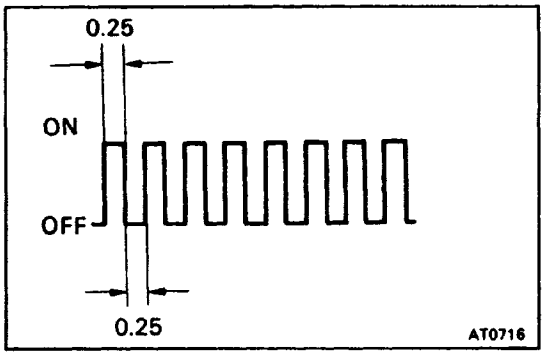

(e) If the system is operating normally (no malfunction), the warning light will blink once every 0.5 seconds.

(f) Repair the system.

(g) After the malfunctioning components has been rep–aired, clear the diagnoistic codes stored in the ECU. (See page BR–55)

HINT: If you disconnect the battery cable while rep–airing, all diagnostic codes in the ECU will erased.

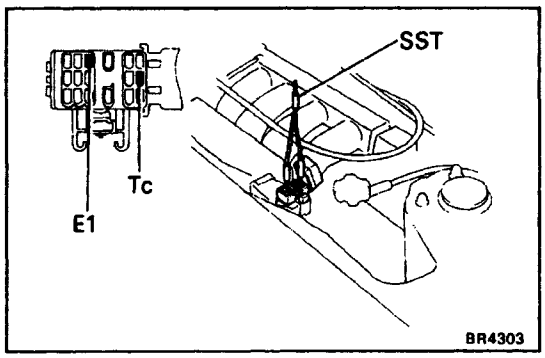

(h) Remove the SST from terminals Te and E1 of the data link connector.
SST 09843–18020

(i) Connector the service connector.

(j) Turn the ignition switch on, and check that the ”ABS” warning light goes off after the warning light goes on for 3 seconds.

Code No.	Light Pattern	Diagnosis	Trouble Part
11		Open circuit in solenoid relay circuit	• Actuator inside wire harness • Control relay • Wire harness and connector of solenoid relay circuit
12		Short circuit in solenoid relay circuit	
13		Open circuit in pump motor relay circuit	• Actuator inside wire harness • Control relay • Wire harness and connector of pump motor relay circuit
14	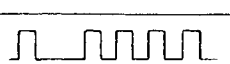	Short circuit in pump motor relay circuit	
21	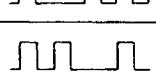	Open or short circuit in 3 position solenoid of front right wheel	• Actuator solenoid • Wire harness and connector of actuator solenoid circuit
22		Open or short circuit in 3 position solenoid of front left wheel	
23	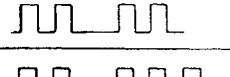	Open or short circuit in 3 position solenoid of rear right wheel	
24	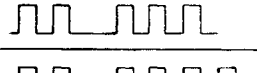	Open or short circuit 3 position solenoid of rear left wheel	
31		Front right wheel speed sensor signal malfunction	• Speed sensor • Sensor rotor • Wire harness and connector of speed sensor
32		Front left wheel speed sensor signal malfunction	
33	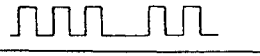	Rear right wheel speed sensor signal malfunction	
34	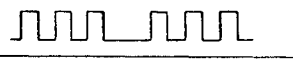	Rear left wheel speed sensor signal malfunction	
35		Open circuit in front left or rear right wheel speed sensor	
36		Open circuit in front right or rear left wheel speed sensor	
37	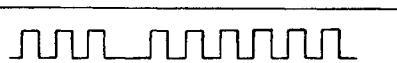	Wrong both rear axle hubs	• Rear sensor rotors
41	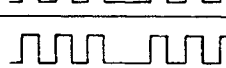	Abnormal battery voltage (less than 9.5 V/more than 16.2 V)	• Battery • Voltage regulator
51	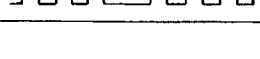	Pump motor of actuator locked or open circuit in pump motor circuit in actuator	• Pump motor, relay and battery • Wire harness, connector and ground bolt or actuator pump motor circuit
Always on		Malfunction in ECU	• ECU

VD0413

8N078–01

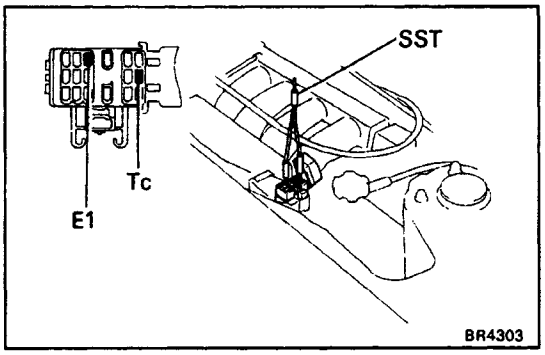

DIAGNOSTIC CODES CLEARING

BR078–01

CLEAR DIAGNOSTIC CODES

(a) Turn the ignition switch on.

(b) Using SST, connect terminals Tc and E1 of the data link connector.
SST 09843–18020

HINT: Keep the vehicle stopped vehicle speed 0 km/h (0 mph).

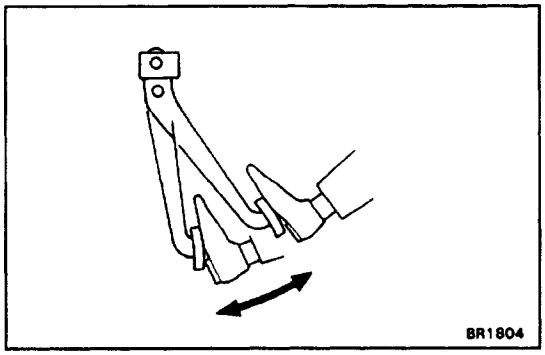

(c) Clear the diagnostic codes stored in ECU by de–pressing the brake pedal 8 or more times within 3 seconds.

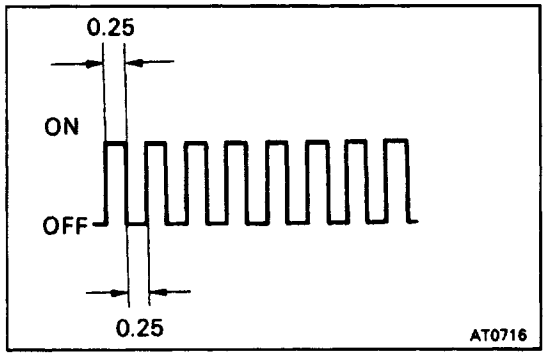

(d) Check that the warning light shows the normal code.

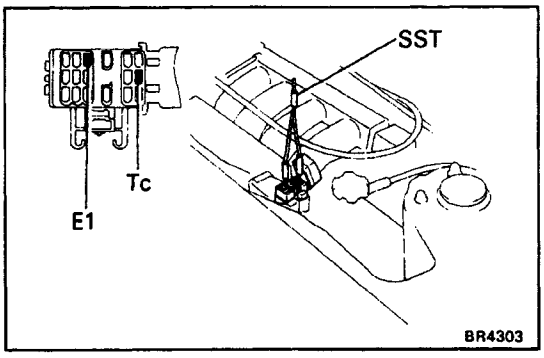

(e) Remove the SST from terminals Te and E1 of the data link connector.
SST 09843–18020

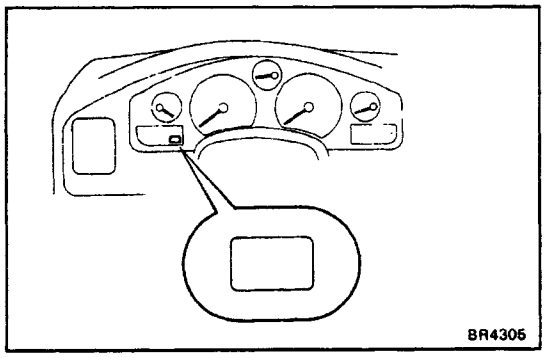

(f) Check that the warning light goes off.

FRONT SPEED SENSOR

BR07K–01

COMPONENTS

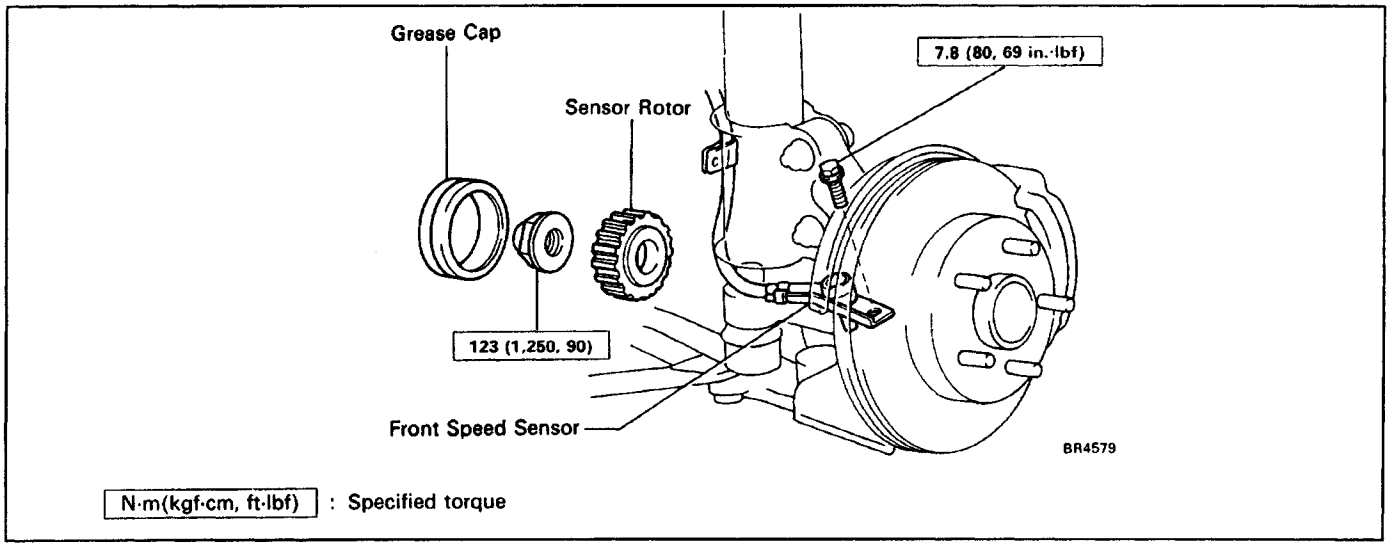

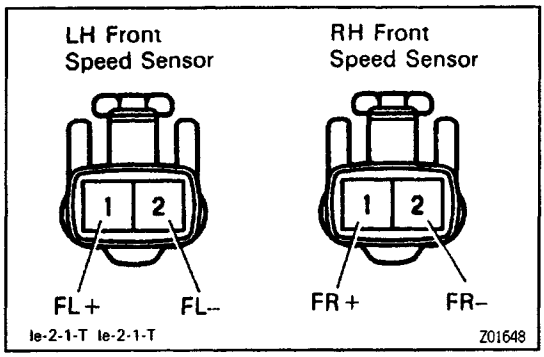

BR07L–01

FRONT SPEED SENSOR INSPECTION

1. INSPECT SPEED SENSOR

(a) Disconnect the speed sensor connector.

(b) Measure the resistance between terminals.

Resistance: 0.9–1.5 kΩ

If resistance value is not as specified, replace the sensor.

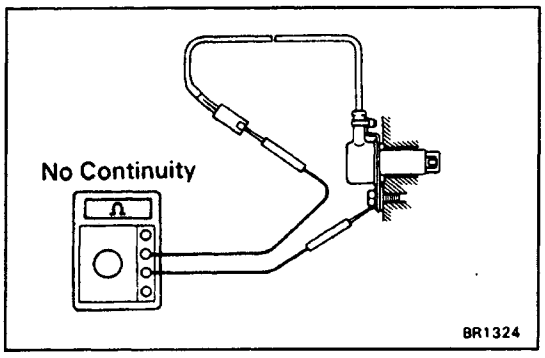

(c) Check that there is no continuity between each terminal and sensor body.

If there is continuity, replace the sensor.

(d) Connect the speed sensor connector.

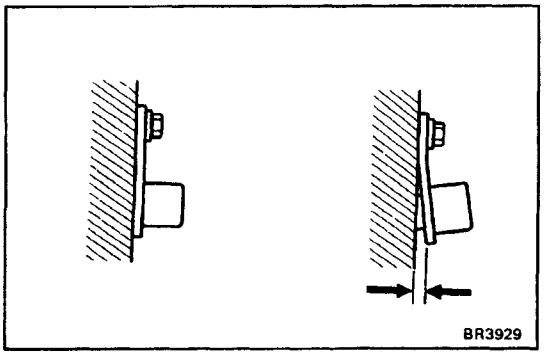

2. INSPECT SENSOR INSTALLATION

(a) Check that the sensor installation bolt is tighten properly. If not, tighten the bolt.

Torque: 7.8 N–m (80 kgf–cm, 69 in.–lbf)

(b) Check that there is no clearance between the sensor and rear axle carrier as shown.

If there is clearance, replace the sensor.

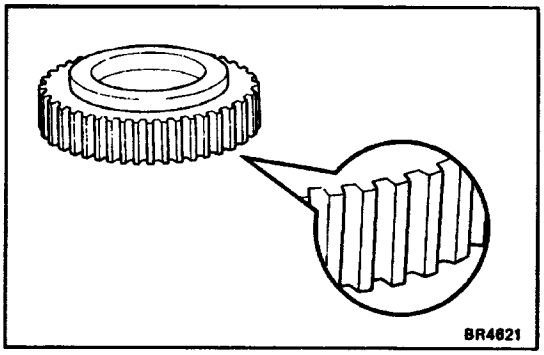

3. VISUALLY INSPECT SENSOR ROTOR SERRATIONS

(a) Remove the sensor rotor.
(See page **SA–14**)

(b) Inspect the sensor rotor serrations for scratches, cracks, warping or missing teeth.

(c) Install the sensor rotor.
(See page SA–16)

NOTICE: To prevent damage to the serration:, do not strike the sensor rotor.

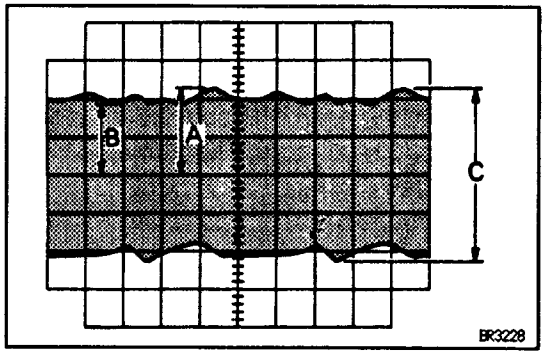

FRONT SPEED SENSOR AN SENSOR ROTOR SERRATIONS INSPECTION (REFERENCE)

INSPECT FRONT SPEED SENSOR AND SENSOR ROTOR SERRATIONS BY USING ANOSCILLOSCOPE

(a) Connect an oscilloscope to the speed sensor con–nector.

(b) Run the vehicle at 20 km/h (12.4 mph), and inspect speed sensor output wave.

(c) Check that C is 0.5 V or more.
If not as specified, replace the speed sensor.

(d) Check that B is 5096 or more of A.

If not as specified, replace the sensor rotor.

REAR SPEED SENSOR

BR07N–01

COMPONENTS

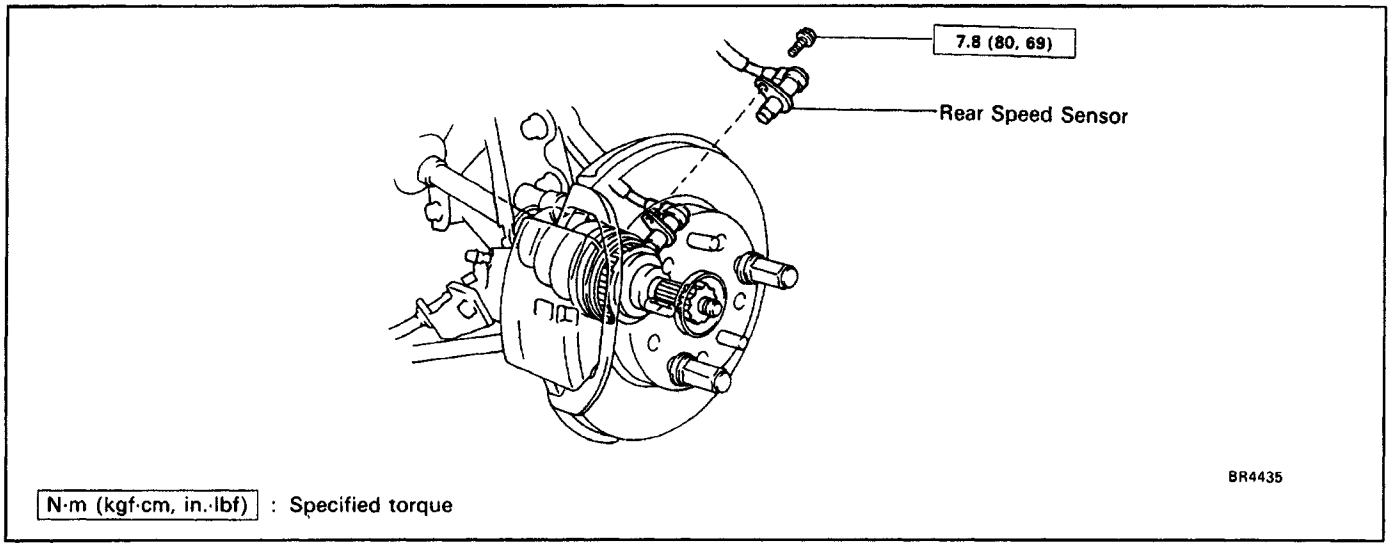

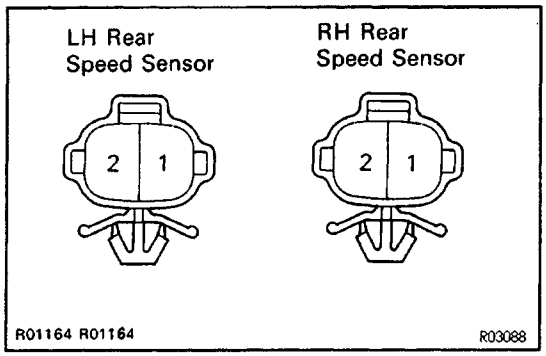

BR07P–01

REAR SPEED SENSOR INSPECTION

1. INSPECT SPEED SENSOR

(a) Disconnect the speed sensor connector.

(b) Measure the resistance between terminals.

Resistance: 0.9–1.5 kΩ

If resistance value is not as specified, replace the sensor.

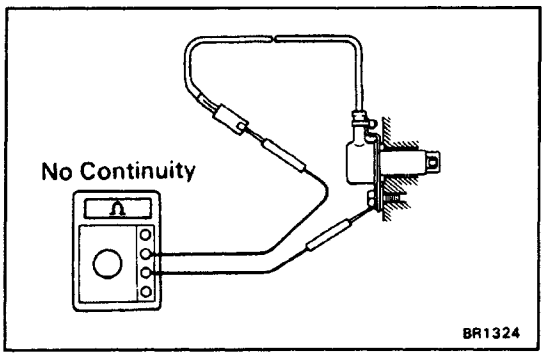

(c) Check that there is no continuity between each terminal and sensor body.

If there is continuity, replace the sensor.

(d) Connect the speed sensor connector.

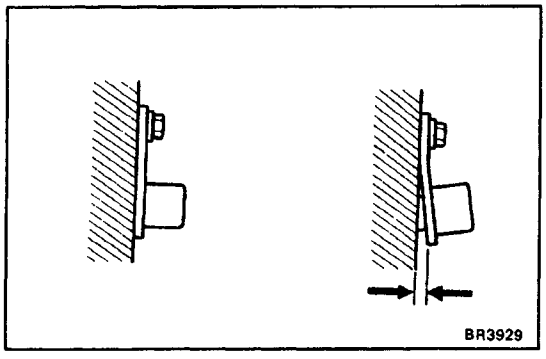

2. INSPECT SENSOR INSTALLATION

(a) Check that the sensor installation bolt is tightened properly. If not, tighten the bolt.

Torque: 7.8 N–m (80 kgf–cm, 69 in.–lbf)

(b) Check that there is no clearance between the sensor and rear axle carrier as shown.

If there is clearance, replace the sensor.

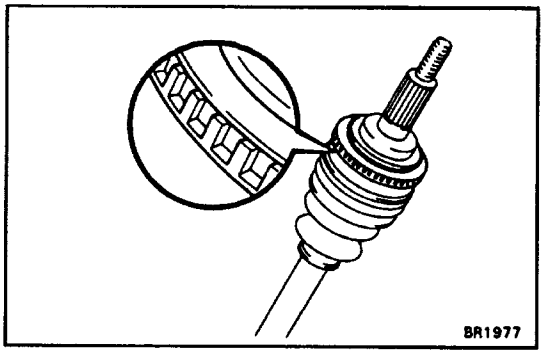

3. VISUALLY INSPECT SENSOR ROTOR SERRATIONS

(a) Remove the drive shaft.
(See page SA–55)

(b) Inspect the sensor rotor serrations for scratches, cranks, warping or missing teeth.

(c) Install the drive shaft.
(See page SA–71)

NOTICE: To prevent damage to the serrations, do not strike the drive shaft.

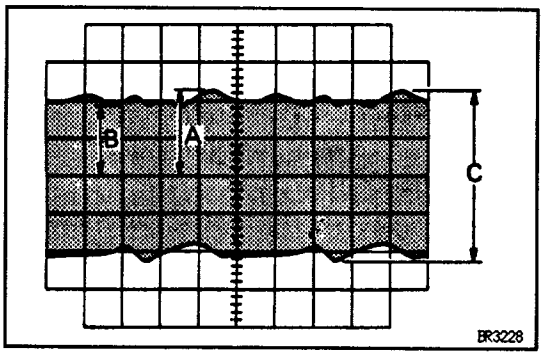

REAR SPEED SENSOR AND SENSOR ROTOR SERRATIONS INSPECTION (REFERENCE)

BR07Q–01

INSPECT REAR SPEED SENSOR AND SENSOR ROTOR SERRATIONS BY USING ANOSCILLOSCOPE

(a) Connect an oscilloscope to the speed sensor con–nector.

(b) Run the vehicle at 20 km/h (12.4 mph), and inspect speed sensor output wave.

(c) Check that C is 0.5 V or more.
If not as specified, replace the speed sensor.

(d) Check that B is 5096 or more of A.
If not as specified, replace the rear axle hub.

SERVICE SPECIFICATIONS

BR07A-01

SERVICE DATA

Brake pedal height (from asphalt sheet)		177 – 187 mm (6.968 – 7.362 in.)
Brake pedal freeplay		3 – 5 mm (0.12 – 0.20 in.)
Brake pedal reserve distance at 490 N (50 kgf, 110.2 lbf)		More than 117 mm (4.61 in.)
Brake booster push rod to piston clearance (W/SST)		0 mm (0 in.)
Front brake pad thickness	STD	10.0mm (0.39 in.)
Front brake pad thickness	Limit	1.0mm (0.039 in.)
Front brake disc thickness	STD	30.0mm (1.181 in.)
Front brake disc thickness	Limit	29.0 mm (1.142 in.)
Front brake disc thickness	STD	25.0mm (0.984 in.)
Front brake disc thickness	Limit	24.0 mm (0.945 in.)
Front brake disc thickness	Limit	0.07 mm (0.0028 in.)
Rear brake pad thickness	STD	10.0 mm (0.394 in.)
Rear brake pad thickness	Limit	1.0 mm (0.039 in.)
Rear brake disc thickness	STD	22.0 mm (0.866 in.)
Rear brake disc thickness	Limit	21.0 mm (0.828 in.)
Rear brake disc thickness	STD	16.0 mm (0.630 in.)
Rear brake disc thickness	Limit	15.0 mm (0.591 in.)
Rear brake disc runout	Limit	0.10 mm (0.0039 in.)
Parking brake lever travel at 196 N (20 kgf, 44.1 lbf)		5 – 8 clicks

TORQUE SPECIFICATIONS

BR07B-01

Part tightened	N–m	kgf–cm	ft–lbf
Master cylinder x Piston stopper bolt	10	100	7
Master cylinder x Reservoir	1.7	17.5	15.2 in.·lbf
Master cylinder x Brake booster	13	130	9
Brake tube union nut	15	155	11
Brake booster clevis lock nut	25	260	19
Brake booster x Pedal bracket	13	130	9
Front disc brake cylinder instllation bolt	34	350	25
Bleeder plug	8.3	85	74 in.·lbf
Front disc brake torque plate x Steering knuckle	88	900	65
Front disk brake cylinder x Flexible hose	30	310	22
Rear drum brake wheel cylinder x Backing plate	10	100	7
Parking brake cable bracket x Backing plate	7.8	80	69 in.·lbf
Rear disc brake cylinder instllation bolt	20	200	14
Rear disc brake torque plate x Dust cover	59	600	43
Rear disc brake cylinder x Flexible hose	30	310	22
Rear disc brake torque plate x Rear axle carrier	47	475	45
Parking brake pedal bracket x Body	61	620	45
ABS actuator bracket x Body	19	195	14
Front speed sensor installation bolt	7.8	80	69 in.·lbf
Rear speed sensor installation bolt	7.8	80	69 in.·lbf

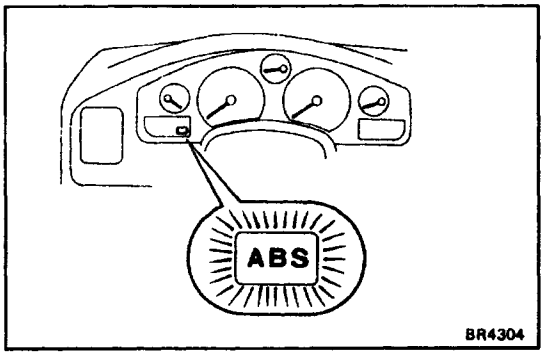

SPEED SENSOR DIAGNOSIS SYSTEM

1. SPEED SENSOR SIGNAL CHECK BR07D–01

(a) Turn the ignition switch to OFF.

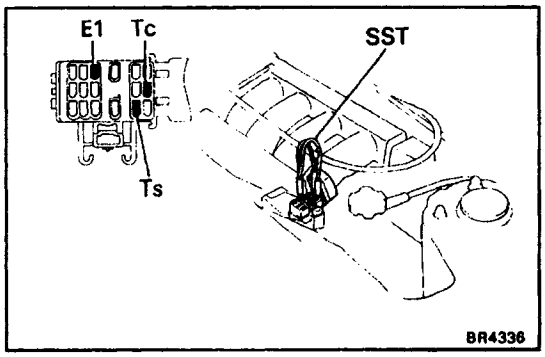

(b) Using SST, connect terminals Ts and E1 of data link connector.
SST 09843–18020

(c) Start the engine.

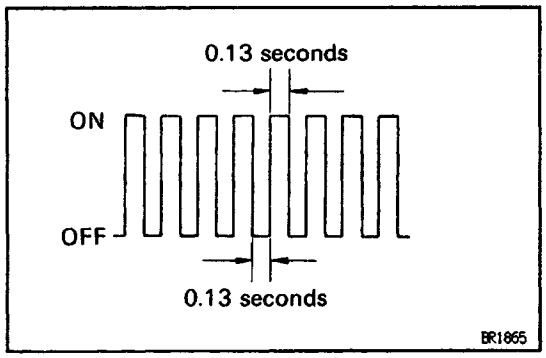

(d) Check that the ABS warning light blinks.

HINT: If the ABS warning light does not blink, inspect the ABS warning light circuit.

(e) Drive vehicle straight forward.

HINT: Drive vehicle faster than 80 km/h (50 mph) for several seconds.

(f) Stop the vehicle.

(g) Using SST, connect terminals Tc and E1 of data link connector.
SST 09843–18020

(h) Read the number of blinks of the ABS warning light.

HINT: See the list of diagnosis codes shown on the next page.

If every sensor is normal, a normal code is output. (A) cycle of 0.25 sec. on and 0.25 sec. OFF is repeated).

If two or more malfunctions are indicated at the same time, the lowest numbered code will be displ–ayed first.

(i) After performing the check, disconnect terminals Ts and E1, Te and E1 of data link connector,and ignition switch turned off.

Code No.	Light Pattern	Diagnosis	Malfunctioning Part
		All speed sensors and sensor rotors are normal	
71		Low voltage of front right speed sensor signal	• Front right speed sensor • Sensor installation
72		Low voltage of front left speed sensor signal	• Front left speed sensor • Sensor installation
73		Low voltage of rear right speed sensor signal	• Rear right speed sensor • Sensor installation
74		Low voltage of rear left speed sensor signal	• Rear left speed sensor • Sensor installation
75		Abnormal change of front right speed sensor signal	• Front right sensor rotor
76	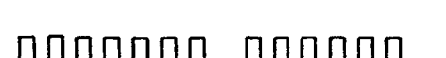	Abnormal change of front left speed sensor signal	• Front left sensor rotor
77	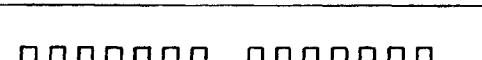	Abnormal change of rear right speed sensor signal	• Rear right sensor rotor
78	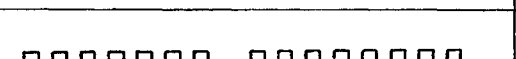	Abnormal change of rear left speed sensor signal	• Rear left sensor rotor

TROUBLESHOOTING

BR07C–01

Problem		No.
”A6S” warning light	Always comes on after ignition switch is turned on.	1
	Does not come on for 3 seconds after ignition switch on.	2
	Comes on and off.	3
	Comes on while running.	1
Brake condition*	Brakes pull.	4
	Braking inefficient.	4
	ABS operates at ordinary braking.	4
	ABS operates just before stopping at ordinary braking.	4
	Brake pedal pulsates abnormally while ABS is operating.	4
	Skidding noise occurs while ABS operating. (ABS operates inefficiently)	5

V00402

1	”ABS” warning light comes on.

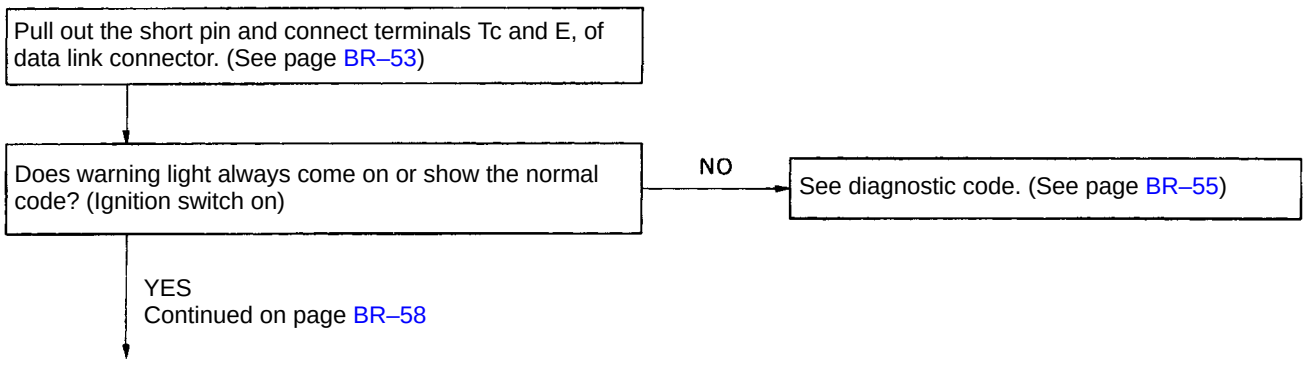

V00403

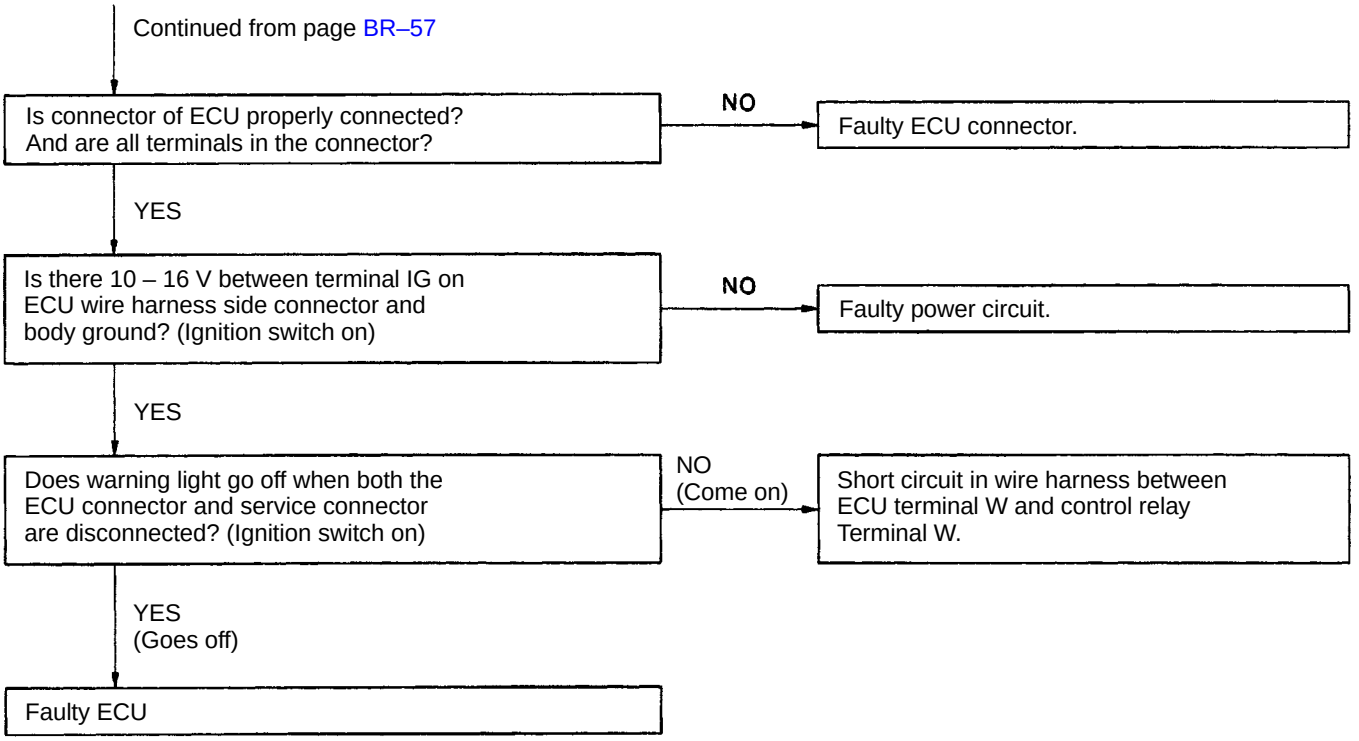
Continued from page BR–57
Is connector of ECU properly connected? And are all terminals in the connector?
NO
Faulty ECU connector.
YES
Is there 10 – 16 V between terminal IG on ECU wire harness side connector and body ground? (Ignition switch on)
NO
Faulty power circuit.
YES
Does warning light go off when both the ECU connector and service connector are disconnected? (Ignition switch on)
NO (Come on)
Short circuit in wire harness between ECU terminal W and control relay Terminal W.
YES (Goes off)
Faulty ECU

V00406

2	”ABS” warning light does not come on for 3 seconds after ignition switch on.

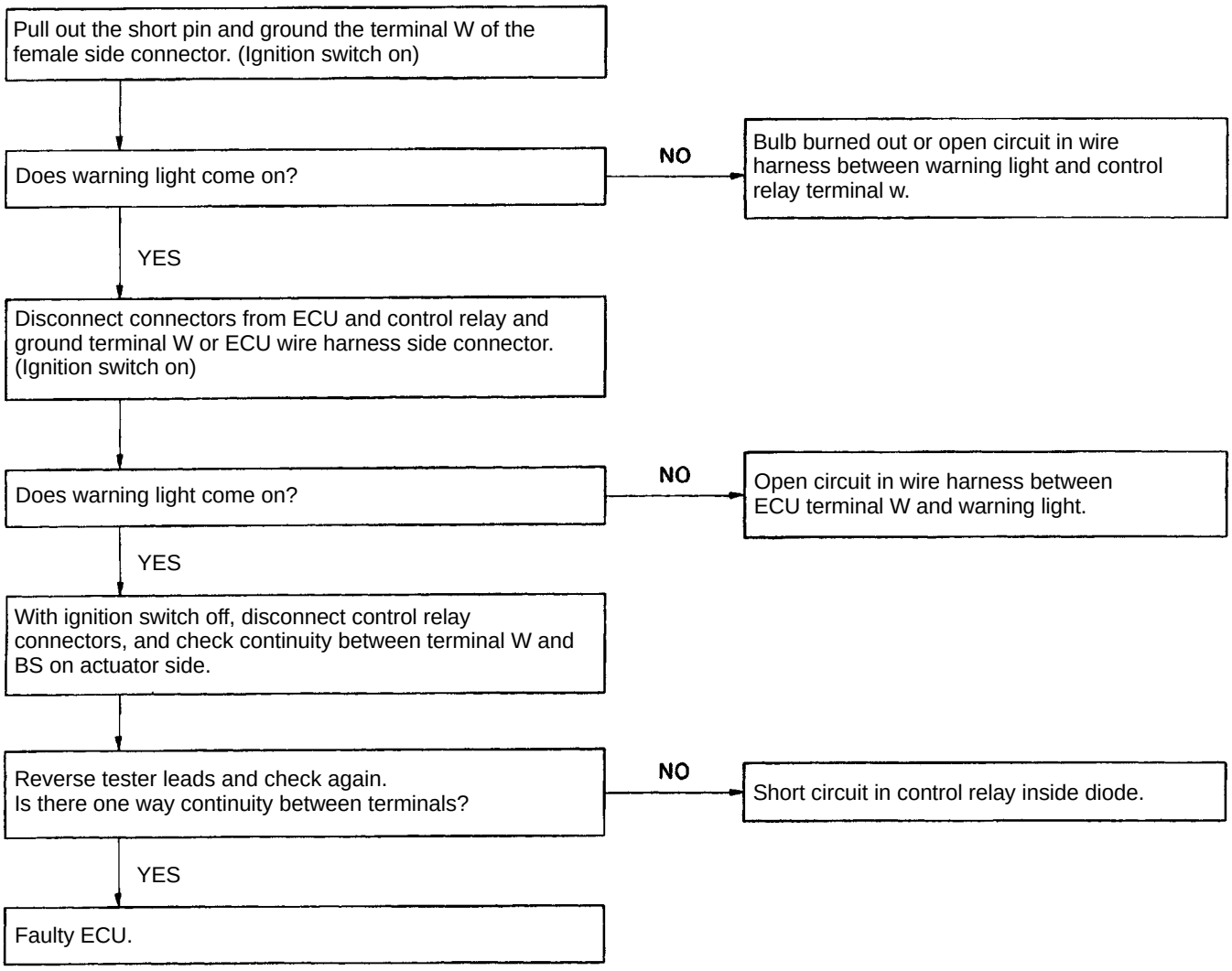

HINT: If the diode is short–circuited, a malfunction at ECU terminal W will occur. When inspecting the terminal, connect the ECU connector, and disconnect actuator connectors and data link connector. Then turn the ignition switch on, and check that the warning light goes on. If it does, the ECU terminal is OK.

V00407

3	”ABS” warning light comes on and off.

- Check for short circuit in wire harness between terminal Te and E, of check connector.

4	• Brakes pull. • Braking inefficient. • ABS operates at ordinary braking. 1 ABS operates just before stopping at ordinary braking. • Brake pedal pulsates abnormally while ABS is operating.

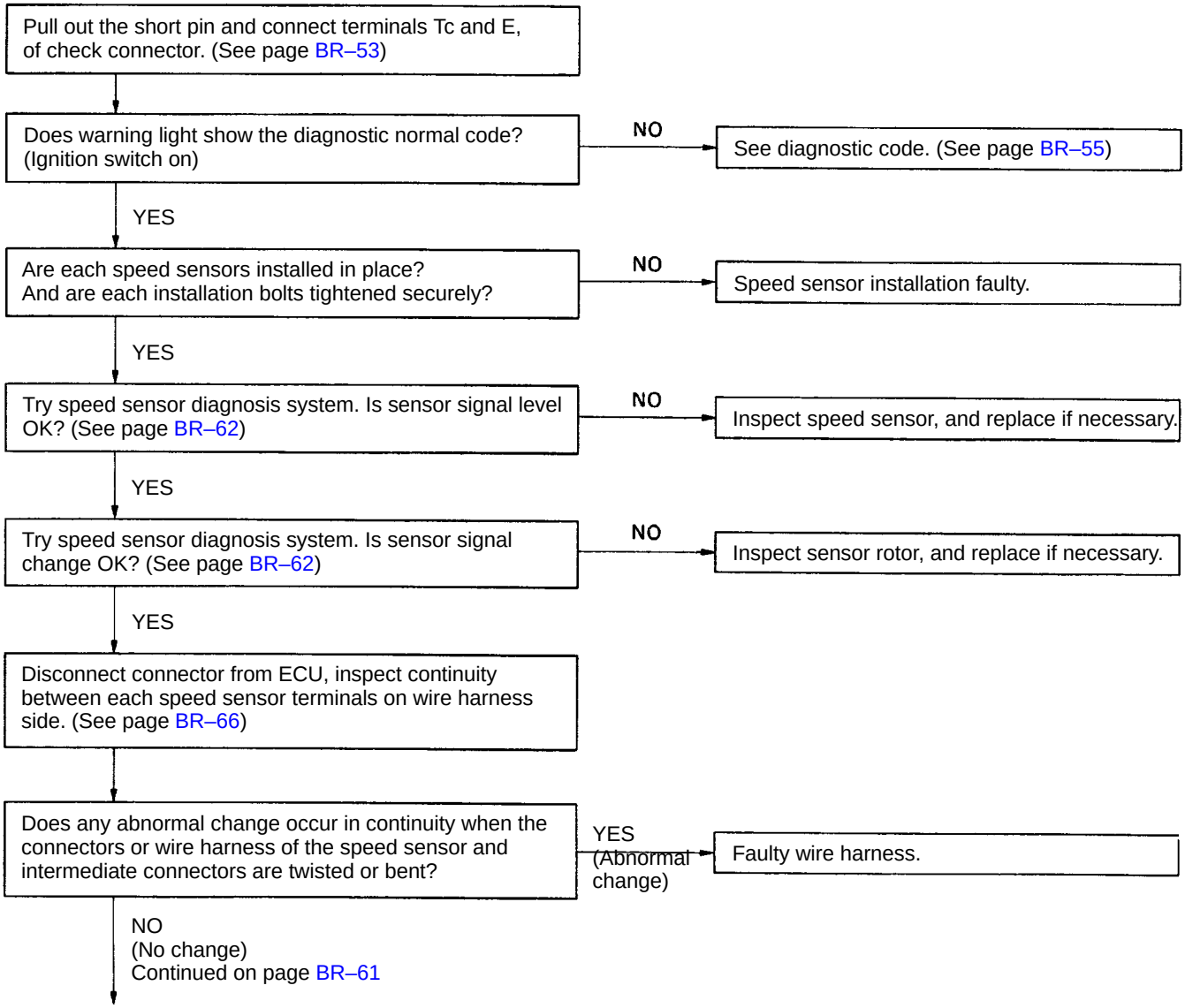

V00405

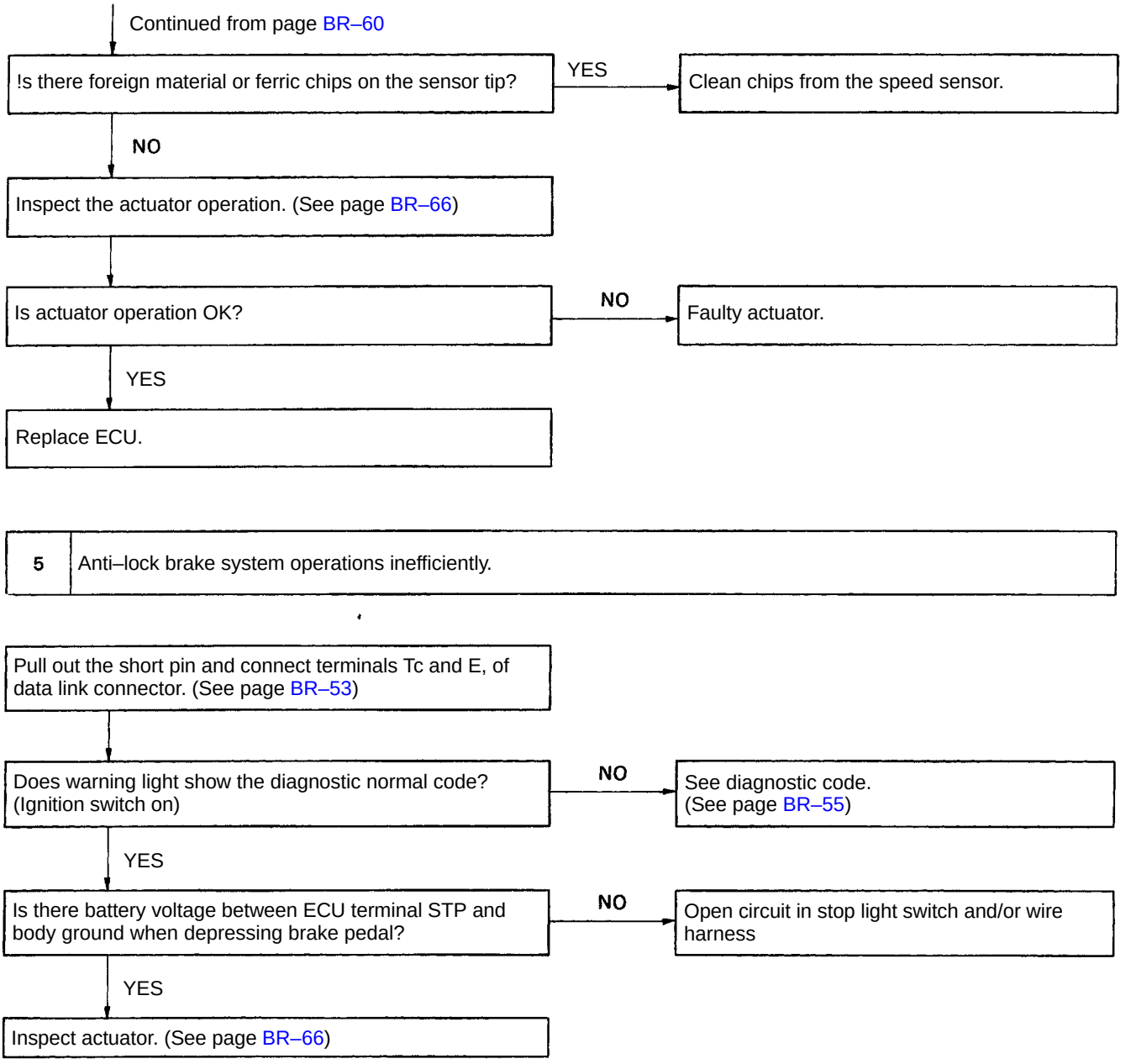
Continued from page BR–60
!s there foreign material or ferric chips on the sensor tip?
YES
Clean chips from the speed sensor.
NO
Inspect the actuator operation. (See page BR–66)
Is actuator operation OK?
NO
Faulty actuator.
YES
Replace ECU.
5
Anti–lock brake system operations inefficiently.
Pull out the short pin and connect terminals Tc and E, of data link connector. (See page BR–53)
Does warning light show the diagnostic normal code? (Ignition switch on)
NO
See diagnostic code. (See page BR–55)
YES
Is there battery voltage between ECU terminal STP and body ground when depressing brake pedal?
NO
Open circuit in stop light switch and/or wire harness
YES
Inspect actuator. (See page BR–66)

V00409

BRAKE BOOSTER

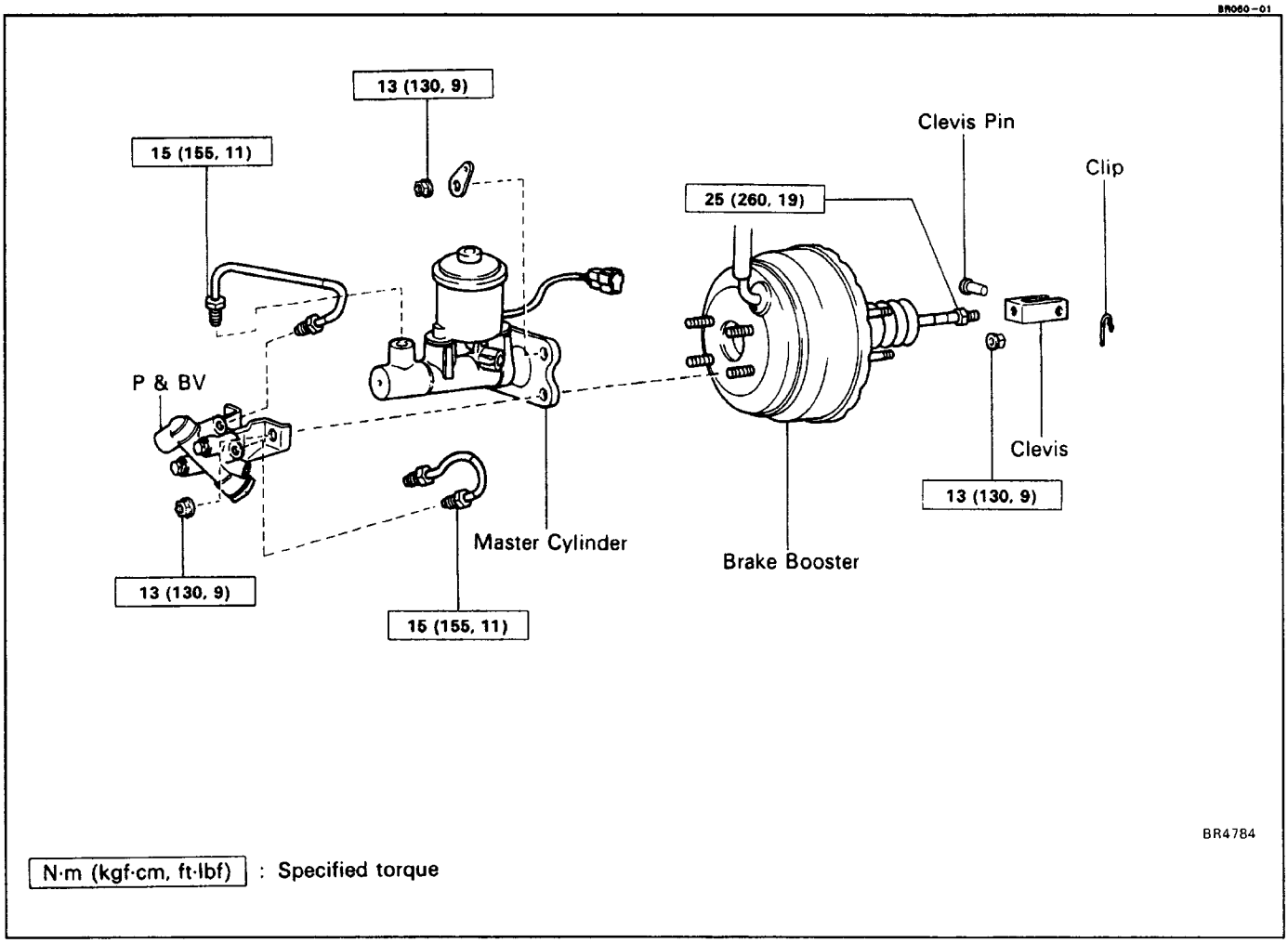

BRAKE BOOSTER REMOVAL

1. REMOVE MASTER CYLINDER
(See page BR–11)
2. DISCONNECT VACUUM HOSE FROM BRAKE BOO–STER
3. REMOVE PEDAL RETURN SPRING
4. REMOVE CLIP AND CLEVIS PIN

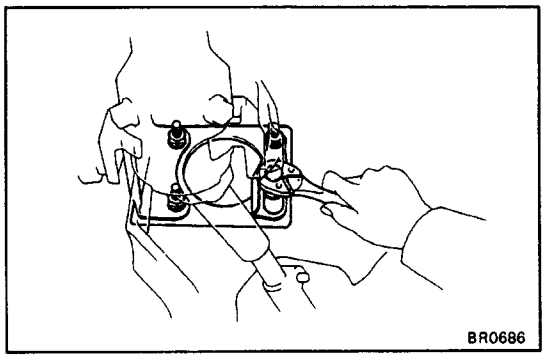

5. REMOVE BRAKE BOOSTER
Remove the four nuts, and pull out the brake booster.

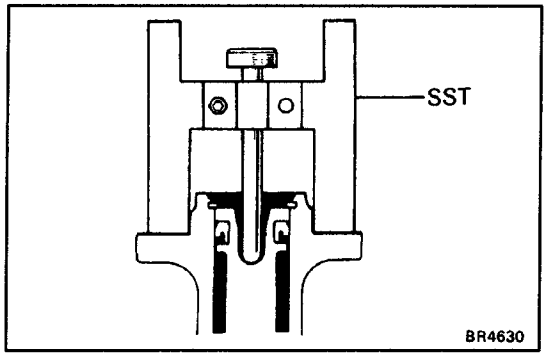

BRAKE BOOSTER INSTALLATION

BR061–01

1. ADJUST LENGTH OF BOOSTER PUSH ROD

(a) Set the SST on the master cylinder, and lower the pin until its tip slightly touches the piston.
SST 09737–00010

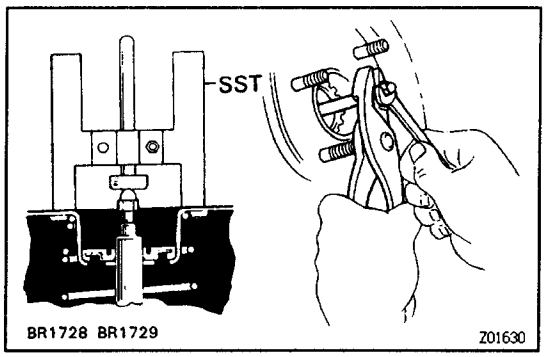

(b) Turn the SST upside down, and set it on the booster.
SST 09737–00010

(c) Measure the clearance between the booster push rod and pin head (SST).

Clearance:

0 mm (0 in.)

(d) Adjust the booster push rod length until the push rod lightly touches the pin head.

2. INSTALL VACUUM HOSE

3. INSTALL MASTER CYLINDER

(See page BR–15**)**

4. FILL BRAKE RESERVOIR WITH BRAKE FLUID AND BLEED BRAKE SYSTEM

(See page BR–7**)**

5. CHECK FOR FLUID LEAKAGE

6. CHECK AND ADJUST BRAKE PEDAL

(See page BR–7**)**

Check and adjust the brake pedal, then tighten the clevis lock nut.

Torque: 25 N–m (260 kgf–cm, 19 ft–lbf)

7. REFORM OPERATIONAL CHECK

(See page BR–8**)**

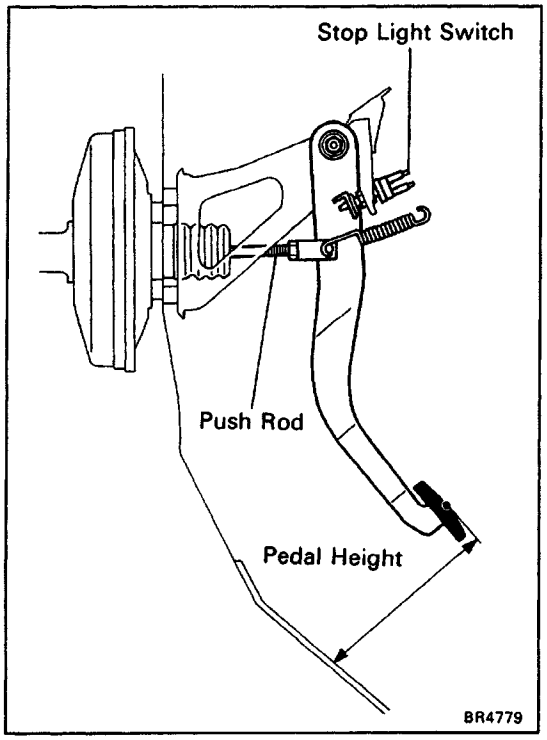

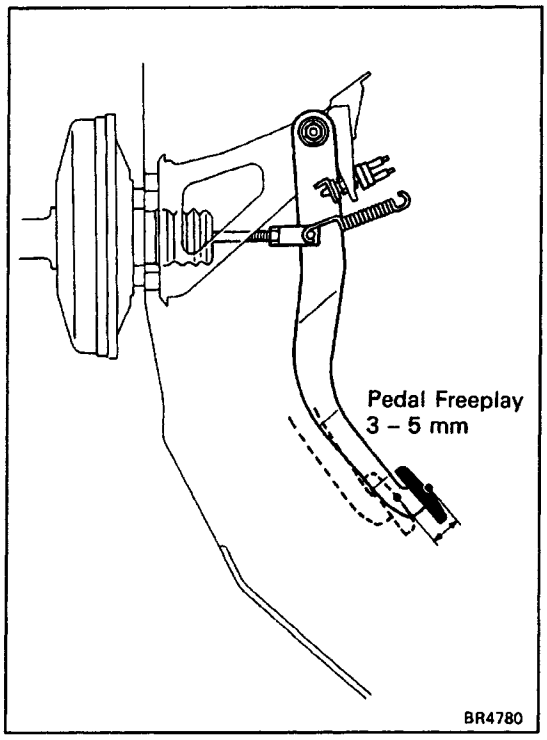

CHECK AND ADJUSTMENT

BRAKE PEDAL CHECK AND ADJUSTMENT

1. CHECK THAT PEDAL HEIGHT IS CORRECT, AS SHOWN

Pedal height from asphalt sheet:

177–187 mm (6.968–7.362 in.)

If the pedal height is incorrect, adjust it.

2. IF NECESSARY, ADJUST PEDAL HEIGHT

(a) Disconnect the connector from the stop light switch.
(b) Loosen the stop light switch lock nut.
(c) Sufficiently loosen the stop light switch.
(d) Loosen the push rod lock nut.
(e) Adjust the pedal height by turning the pedal push rod.
(f) Return the stop light switch until it lightly contact the pedal stopper.
(g) Tighten the lock nut and connect the connector to the stop light switch.
(h) Check that the stop lights light when the brake pedal is depressed.
(i) After adjusting the pedal height, check and adjust the pedal freeplay.

3. CHECK THAT PEDAL FREEPLAY IS CORRECT, AS SHOWN

(a) Stop the engine depress the brake pedal several times until there is no more vacuum left in the booster.
(b) (Single booster)
Push in the pedal until the beginning of resistance is felt. Measure the distance, as shown.
(Tandem booster)
Push in the pedal until the beginning of the second resistance is felt. Measure the distance, as shown.

Pedal freeplay:

3–5 mm (0.12–0.20 in.)

(Tandem booster)

HINT: The freeplay to the first resistance is due to the play between the clevis and pin. And it is 1 –3 mm (0.04–0.12 in.) on the pedal.

4. IF NECESSARY, ADJUST PEDAL FREEPLAY

(a) If incorrect, adjust the pedal freeplay by turning the pedal push rod.
(b) Start the engine and confirm that there is pedal fre–eplay.
(c) After adjusting the pedal freeplay, check the pedal height.

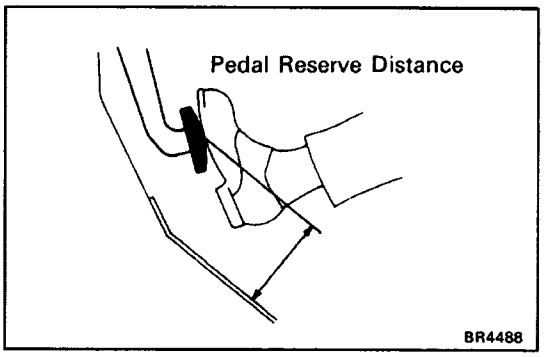

5. CHECK THAT PEDAL RESERVE DISTANCE IS CORRECT, AS SHOWN

Release the parking brake.

With the engine running, depress the pedal and measure the pedal reserve distance, as shown.

Pedal reserve distance from asphalt sheet at 490 N (50 kgf, 110.2 lbf):

More than 117 mm (4.61 in.)

If the reserve distance is incorrect, troubleshoot the brake system.

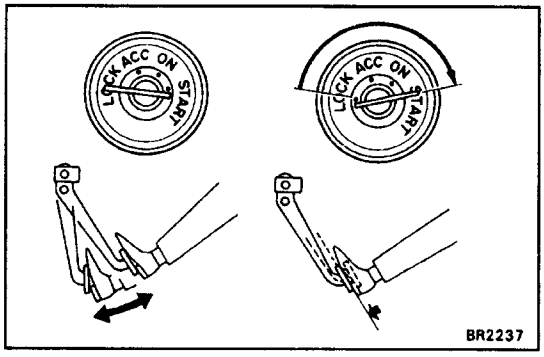

BRAKE BOSTER OPERATIONAL TEST

BR06X–01

1. OPERATING CHECK

(a) Depress the brake pedal several times with the engine off and check that there is no change in the pedal reserve distance.

(b) Depress the brake pedal and start the engine. If the pedal goes down slightly, operation is normal.

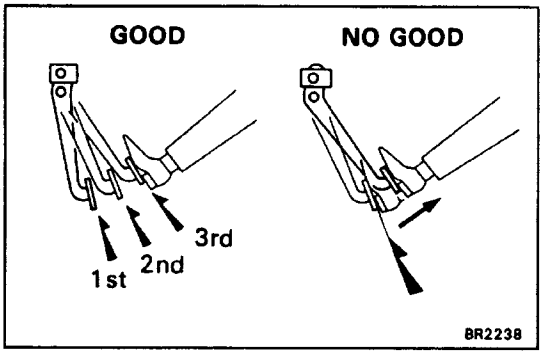

2. AIR TIGHTNESS

(a) Start the engine and stop it after one or two minutes. Depress the brake pedal several times slowly. If the pedal goes down the farthest the first time, but gra–dually rises after the second or third time, the booster is air tight.

(b) Depress the brake pedal while the engine is running, and stop the engine with the pedal depressed. If there is no change in the pedal reserve travel after holding the pedal for thirty seconds, the booster is air tight.

BR06Y–01

BRAKE SYSTEM BLEEDING

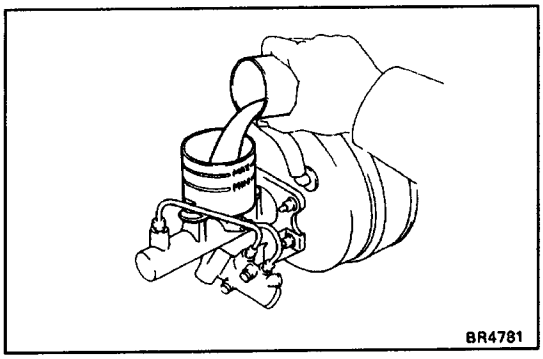
BR4781

HINT: If any work is done one the brake system or if air in the brake lines is suspected, bleed the system of air.

NOTICE: Do not let brake fluid remain on a painted surface. Wash it off immediately.

1. FILL BRAKE RESERVOIR TANK WITH BRAKE FLUID

Fluid: SAEJ1703 or FMVSS No.116 DOT3

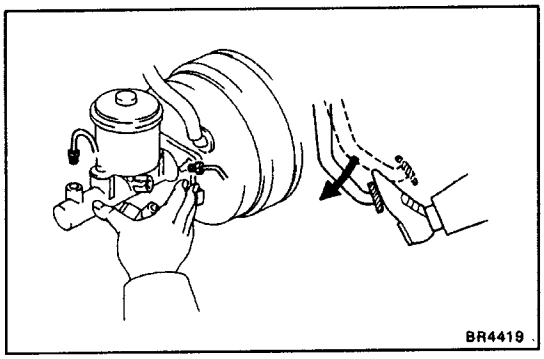
BR4419

2. BLEED MASTER CYLINDER

HINT: If the master cylinder has been disassembled or if the reservoir tank becomes empty, bleed the air from the master cylinder.

(a) Disconnect the brake tubes from the master cylinder.

(b) Slowly depress the brake pedal and hold it.

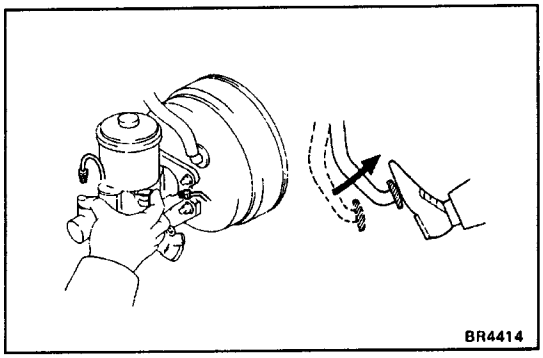
BR4414

(c) Block off the outlet plug with your finger and release the brake pedal.

(d) Repeat (b) and (c) three or four times.

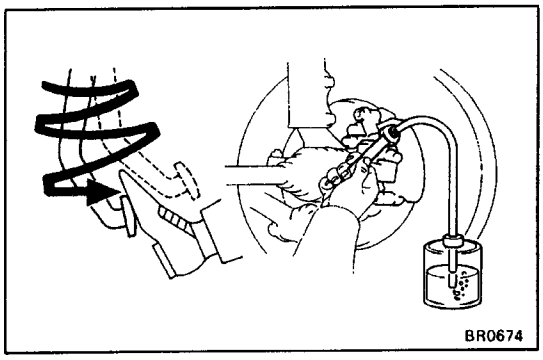
BR0674

3. BLEED BRAKE LINE

(a) Connect the vinyl tube to the brake cylinder.

(b) Depress the brake pedal several times, then loosen the bleeder plug with the pedal held down.

(c) At the point when fluid stops coming out, tighten the bleeder plug, then release the brake pedal.

(d) Repeat (b) and (c) until all the air in the fluid has been bled out.

(e) Repeat the above procedure to bleed the out of the brake line for each wheel.

4. CHECK FLUID LEVEL IN RESERVOIR TANK

Check the fluid level and add fluid if necessary.

Fluid: SAEJ1703 or FMVSS No.116 DOT3

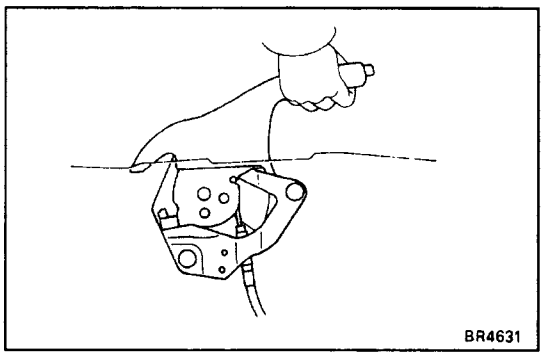

PARKING BRAKE CHECK AND ADJUSTMENT

BR06Z–01

1. CHECK THAT PARKING BRAKE LEVER TRAVEL IS CORRECT

(a) Pull the parking brake lever all the way up and down for two or three times. Then return the parking brake lever.

(b) Depress the brake pedal for several times.

(c) Pull the parking brake lever all the way up, and count the notches of lever travel.

Parking brake lever travel at 196 N (20 kgf, 44.1 lbf): 5–8 clicks

If incorrect, adjust the parking brake.

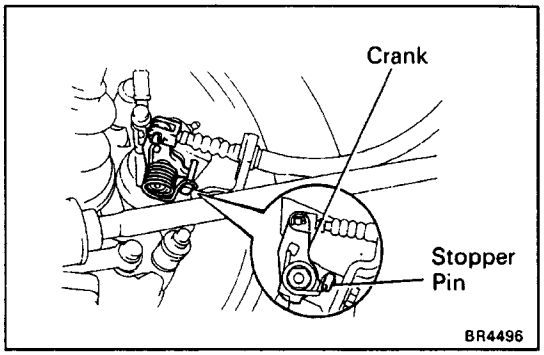

2. IF NECESSARY, ADJUST PARKING BRAKE

(a) Pull the parking brake lever all the way up and down for two or three times. Then return the parking brake lever.

(b) Depress the brake pedal for several times.

(c) Remove the fuel tank protector.

(d) Loosen the adjusting nut and brake cable, and check that the parking brake crank touches stopper pin.

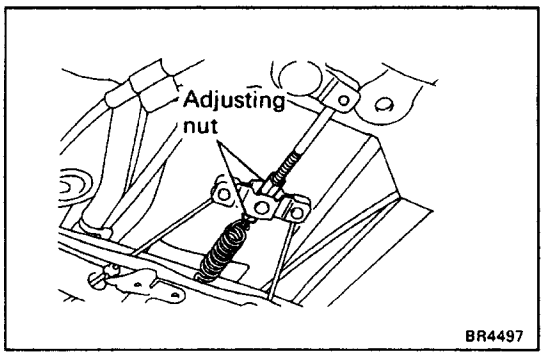

(e) Stretch the brake cable by turning the adjusting nut before the parking brake crank begin moving.

(f) Tighten the adjusting nuts.

HINT: Tighten the adjusting nuts so the equalizer is horizontal to the ground.

Torque: 16 N–m (160 kgf–cm, 12 ft–lbf)

(g) Install the fuel tank protector.

GENERAL DESCRIPTION

1. Care must be taken to replace each part properly as it could affect the performance of the brake system and result in a driving hazard. Replace the parts with parts of the same part number or equivalent.
2. It is very important to keep parts and the area clean when repairing the brake system.

DESCRIPTION

The service brakes consist of a foot brake which changes rotational energy to thermal energy to stop the vehicle while it is being driven and a parking brake to keep the vehicle from moving while it is parked.

FRONT BRAKE

BR062–01

PE36T DISC (For 3S–GTE)

COMPONENTS

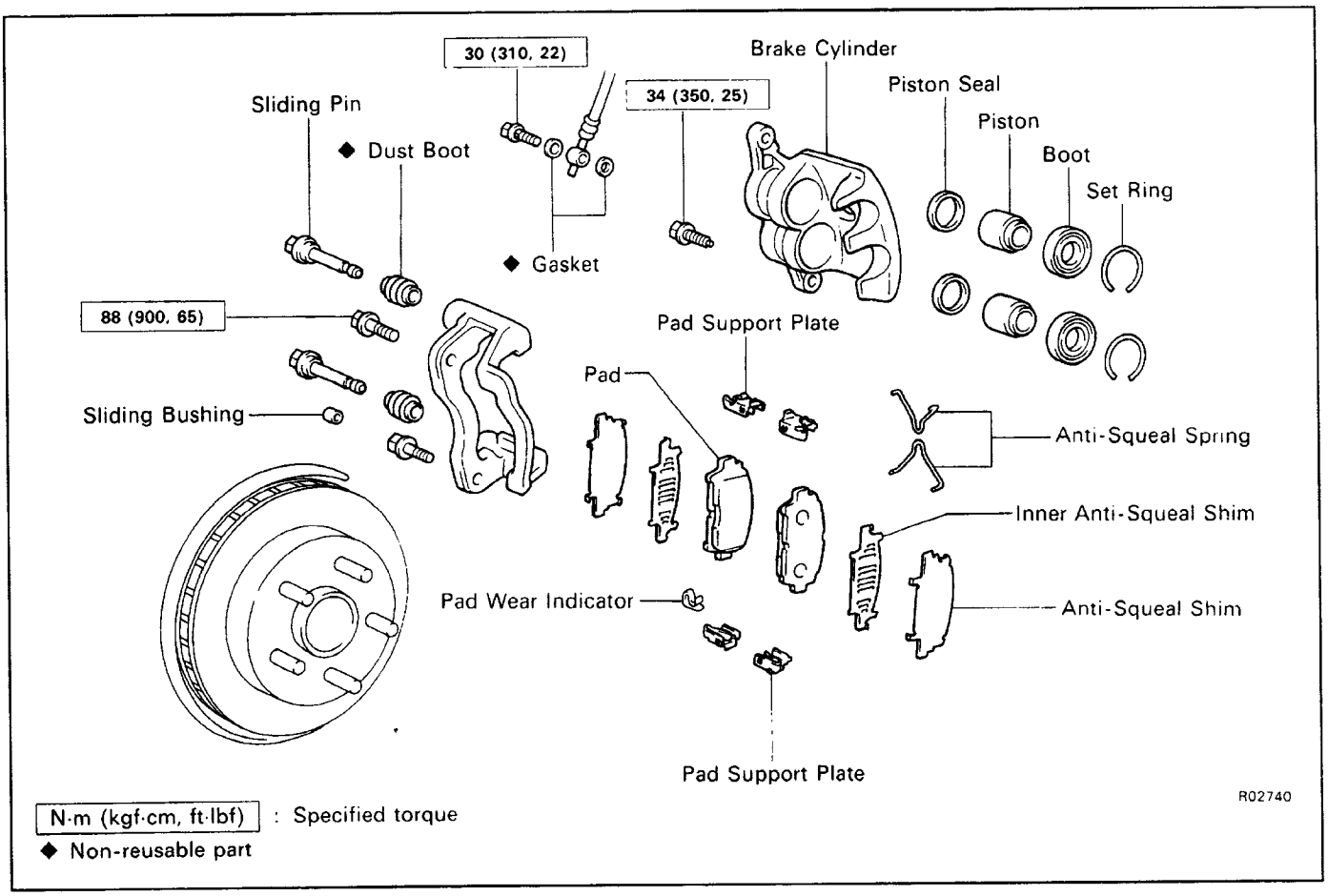

BR063–01

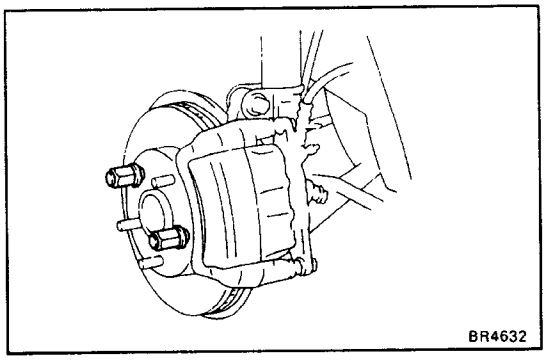

BRAKE PADS REPLACEMENT

1. REMOVE FRONT WHEEL

Remove the wheel and temporarily fasten the roto disc with hub nuts.

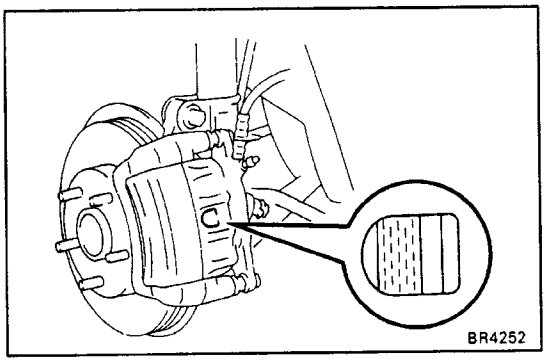

2. INSPECT PAD LINING THICKNESS

Check the pad thickness through the cylinder inspection hole and replace the pads if it is not within specification.

Minimum thickness:

1.0 mm (0.039 in.)

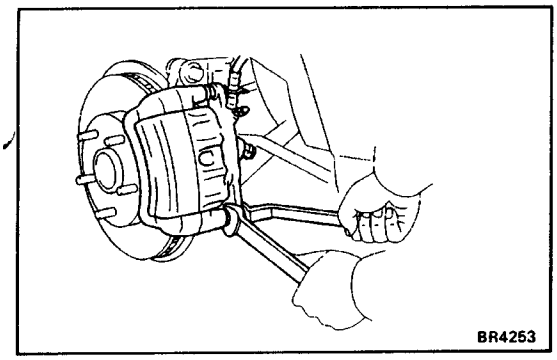

3. REMOVE CYLINDER FROM TORQUE PLATE

(a) Hold the sliding pin and loosen the two installation bolts.

(b) Remove the installation bolts.

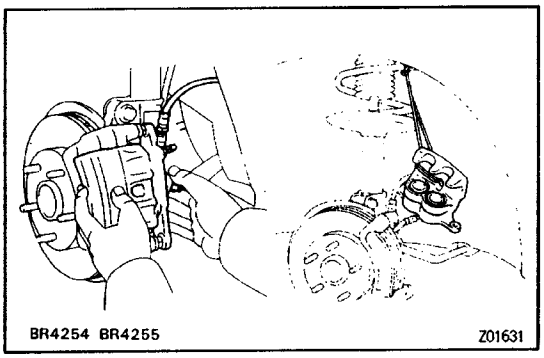

(c) Remove the brake cylinder and suspend it so the hose is not stretched.

HINT: Do not disconnect the brake hose.

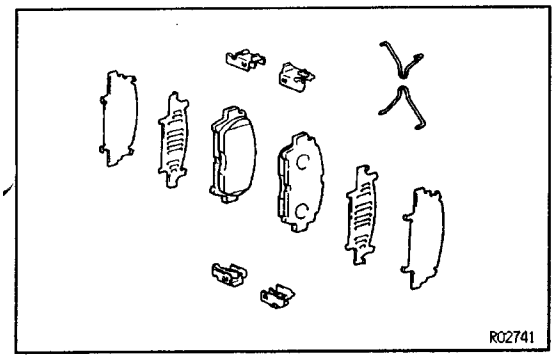

4. REMOVE FOLLOWING PARTS:

(a) Two anti–squeal springs

(b) Two brake pads

(c) Four anti–squeal shims

(d) Pad wear indicator plate

(e) Two pad support plates

5. CHECK ROTOR DISC THICKNESS AND RUNOUT

(See page BR–22**)**

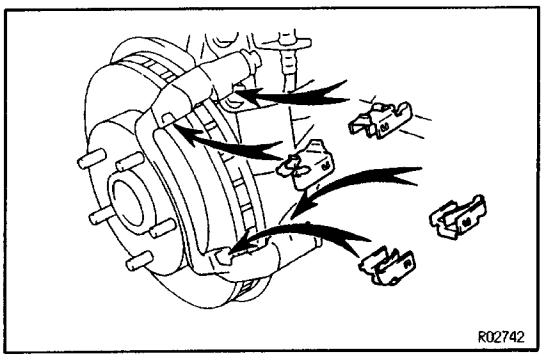

6. INSTALL PAD SUPPORT PLATES

Install the two pad support plates.

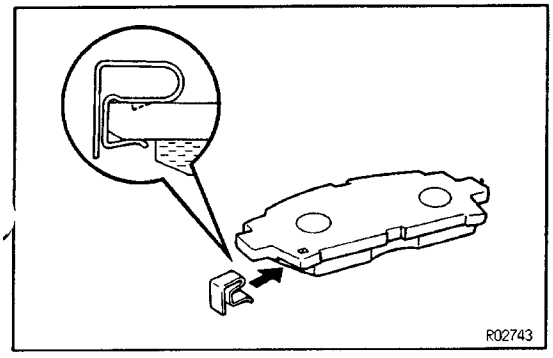

7. INSTALL NEW PADS

(a) Install a pad wear indicator plate on the inside pad.

(b) Apply disc brake grease to both sides of the two inner anti–squeal shims.

(c) Install the two anti–squeal shims to the each pad.

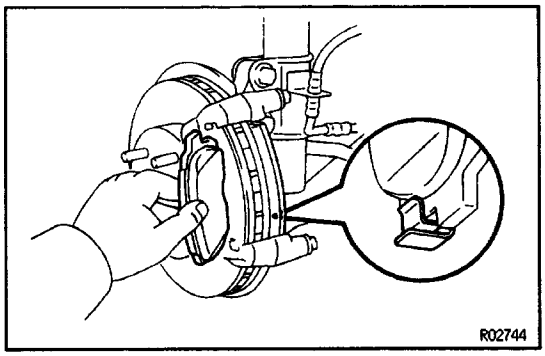

(d) Install inside pad with the pad wear indicator plate facing downward.
(e) Install outside pad.

NOTICE: There should be no oil grease adhering to the friction surfaces of the pads or the rotor disc.

(f) Install the two anti–squeal springs.

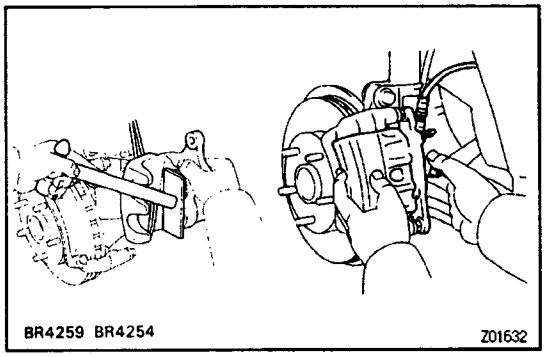

8. INSTALL CYLINDER

(a) Draw out a small amount of brake fluid from the reservoir tank.
(b) Place a wooden plate on the piston, and press in the piston with a hammer handle or similar implement.

HINT: If the piston is difficult to punch in, loosen the bleeder plug and push in the piston while letting some brake fluid escape.

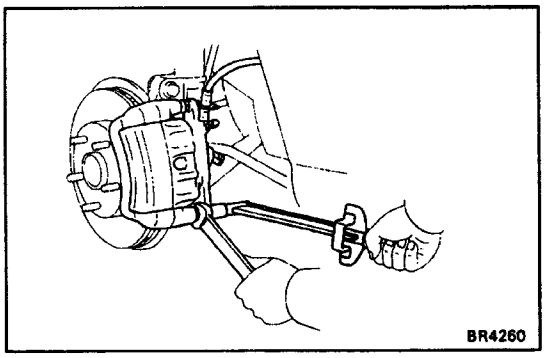

(c) Temporarily install the cylinder on the torque plate with two installation bolts.
(d) Hold the sliding pin and torque the installation bolts.

Torque: 34 N–m (350 kgf–cm, 25 ft–lbf)

9. INSTALL FRONT WHEEL

10. CHECK THAT FLUID LEVEL IS MAX LINE

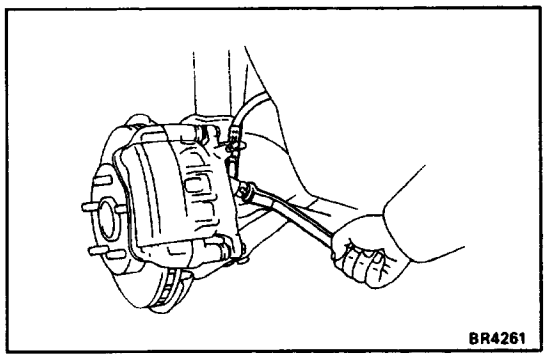

BR064–01

CYLINDER REMOVAL

1. DISCONNECT FLEXIBLE HOSE

(a) Remove the union bolt and two gaskets from the brake cylinder, then disconnect the flexible hose from the brake cylinder.
(b) Use a container to catch the brake fluid as it drains out.

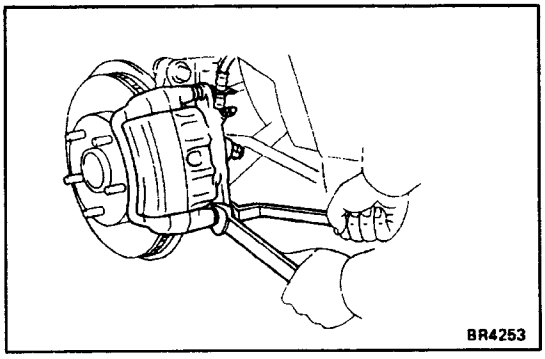

2. REMOVE CYLINDER FROM TORQUE PLATE

(a) Hold the sliding pin and loosen the two installation bolts.
(b) Remove the two installation bolts.
(e) Remove the cylinder from the torque plate.

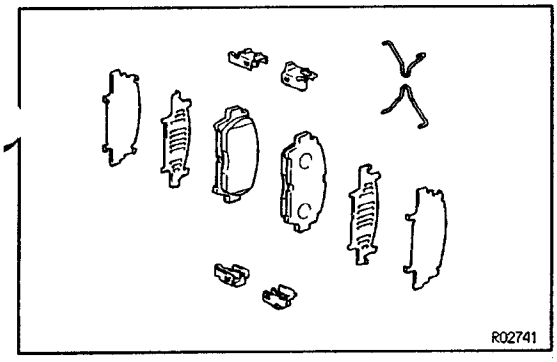

3. REMOVE FOLLOWING PARTS:

(a) Two anti–squeal springs

(b) Two brake pads

(c) Four anti–squeal shims

(d) Pad wear indicator

(e) Two pad support plates

BR065–01

CYLINDER DISASSEMBLY

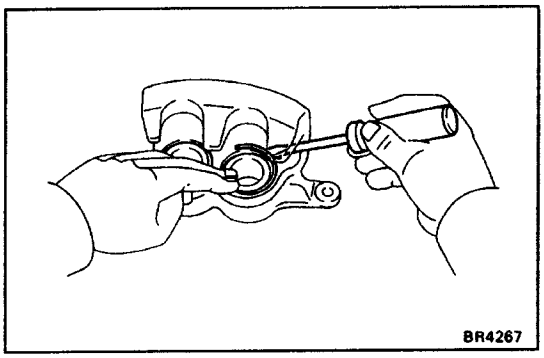

1. REMOVE CYLINDER BOOT SET RINGS AND CYL–INDER BOOTS

Using a screwdriver, remove the cylinder boot set rings and cylinder boots from the cylinder.

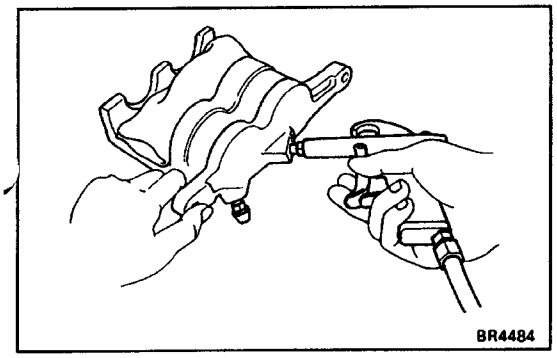

2. REMOVE PISTONS

(a) Place a piece of cloth or similar article between the pistons and the cylinder.

(b) Use compressed air to remove the pistons from the cylinder.

CAUTION: Do not place your fingers in front of the piston when using compressed air.

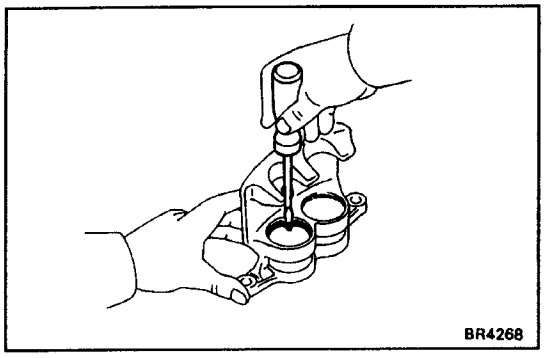

3. REMOVE PISTON SEALS

Using a screwdriver, remove the piston seals from the cylinder.

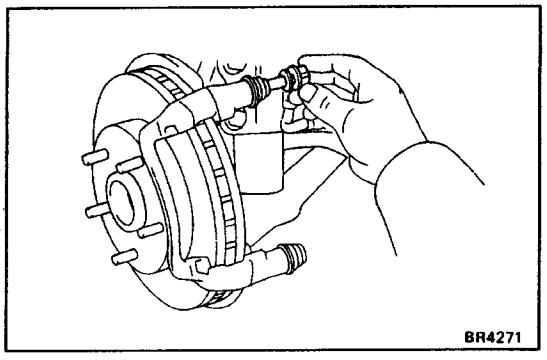

4. REMOVE SLIDING PINS AND DUST BOOTS

(a) Remove the two sliding pins from the torque plate.

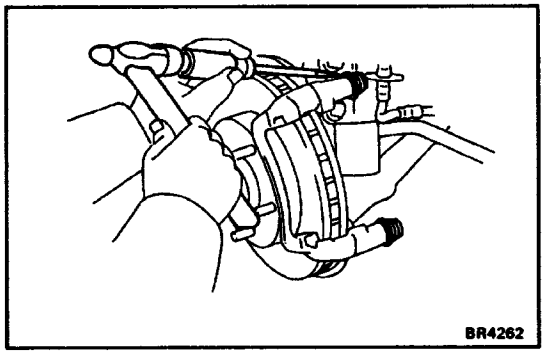

(b) Using a chisel and hammer, tap out the two dust boots.

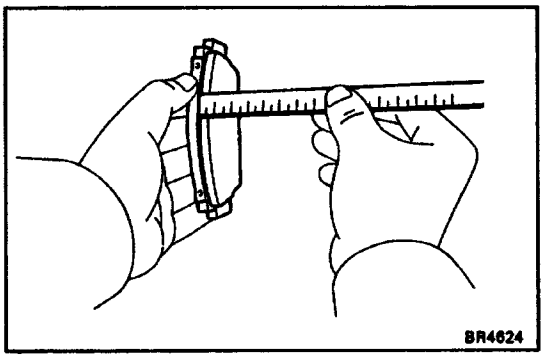

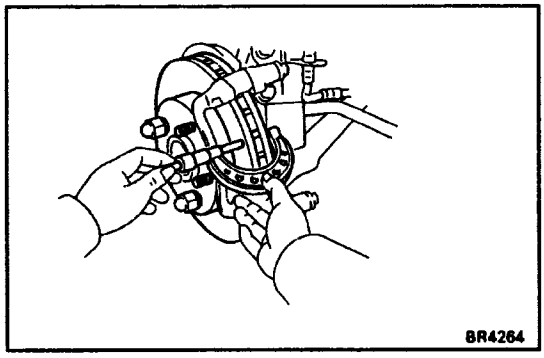

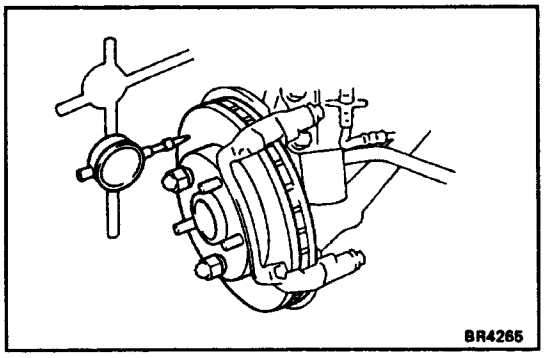

BR066–01

FRONT BRAKE COMPONENTS INSPECTION

1. MEASURE PAD LINING THICKNESS

Standard thickness:

10.0 mm (0.39 in.)

Minimum thickness:

1.0 mm (0.039 in.)

Replace the pad if the thickness is less than the minimum of if it shows sign of uneven wear.

2. MEASURE ROTOR DISC THICKNESS

Standard thickness:

30.0 mm (1.181 in.)

Minimum thickness:

28.0 mm (1.102 in.)

If the disc is scored or worn, of if thickness is less than minimum, repair or replace the disc.

3. MEASURE ROTOR DISC RUNOUT

HINT: Before measuring the runout, confirm that the front hub bearing play is within specification.

Measure the rotor disc runout at 10 mm (0.39 in.) from the outer edge of the disc.

Maximum disc runout:

0.07 mm (0.0028 in.)

If the runout is greater than the maximum, inspect and adjust if following the procedure below.

Then replace the disc if necessary.

(a) Remove the torque plate from the knuckle.

(b) Remove the hub nuts of the temporarily installed disc and pull of the rotor disc.

(c) Check that the hub axial play is within specification, and replace the bearing if not within specification.
(See page SA–12)

(d) Install the rotor disc and measure the disc runout, then shift the rotor disc one fifth of a turn or one fourth of a turn, and measure the disc runout. Simi–larity measure the runout at each position, and select the position where the runout is minimum.

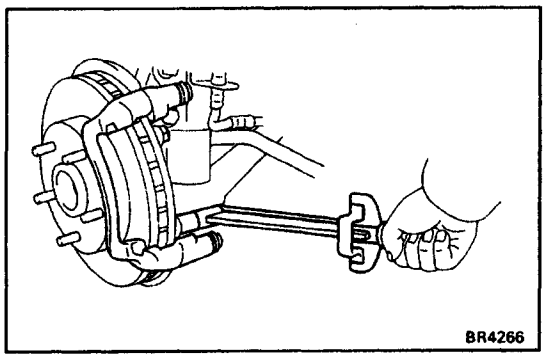

(e). (n this position, if the runout is within specification, install the torque plate and torque the mounting bolts.

Torque: 88 N–m (900 kgf–cm, 65 ft–lbf)

(f) If not within specification, replace the rotor disc, and repeat (d) and (e).

BR067–01

CYLINDER ASSEMBLY

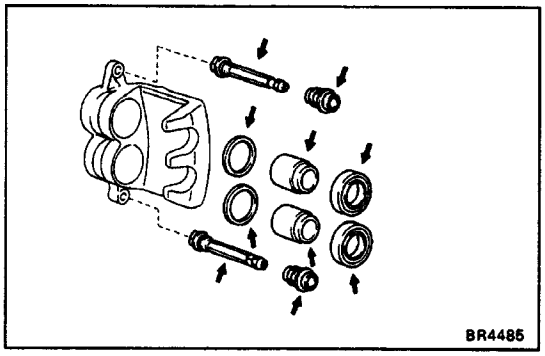

1. APPLY LITHIUM SOAP BASE GLYCOL GREASE TO PARTS INDICATED WITH ARROWS

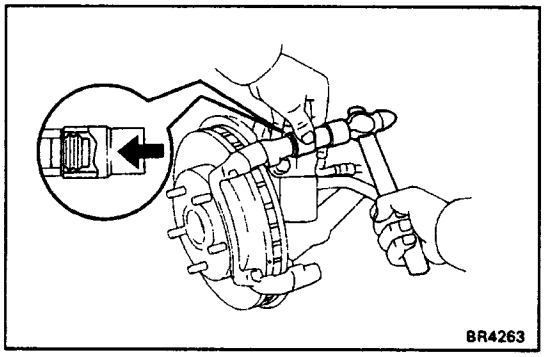

2. INSTALL DUST BOOTS AND SLIDING PINS

(a) Using a 19 mm socket wrench and hammer, tap in two new dust boots into the torque plate.

(b) Confirm that the metal plate portion of the dust boot fits snugly in the torque plate.

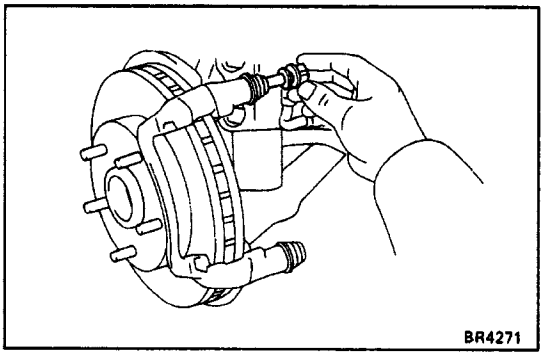

(c) Insert two sliding pins into the torque plate.

NOTICE: Insert the sliding pin with sliding bushing into the bottom side.

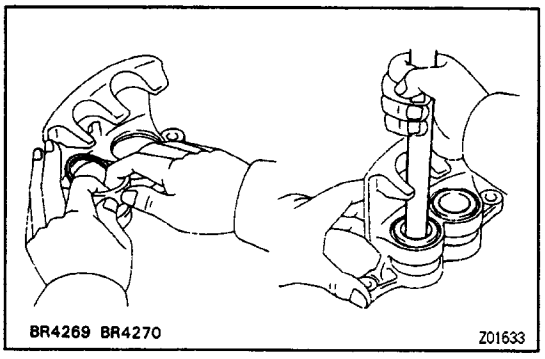

3. INSTALL PISTON SEALS AND PISTONS IN CYLINDER

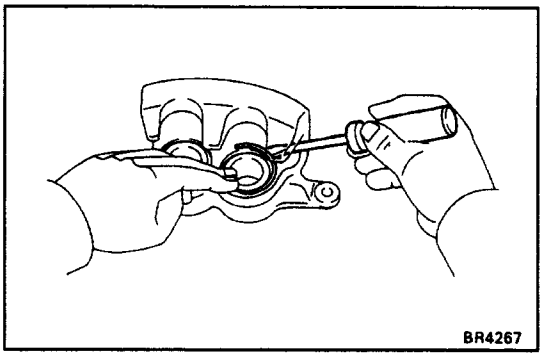

4. INSTALL CYLINDER BOOTS AND CYLINDER BOOT SET RINGS

BR068–01

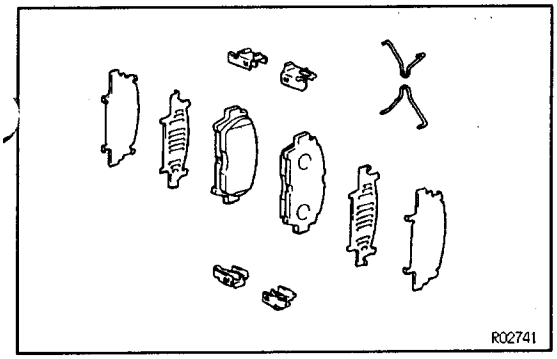

CYLINDER INSTALLATION

1. INSTALL FOLLOWING PARTS:

(a) Two pad support plates
(b) Pad wear indicator
(c) Four anti–squeal shims
(d) Two brake pads
(e) Two anti–squeal springs

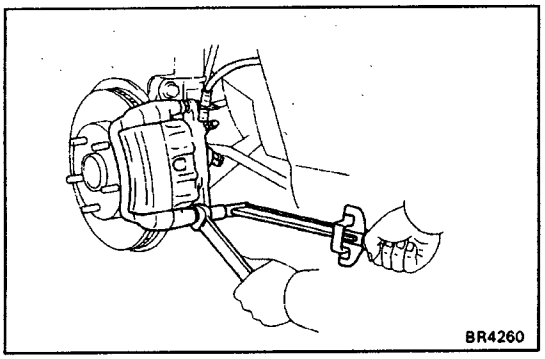

2. INSTALL CYLINDER

(a) Temporarily install the cylinder on the torque plate with two installation bolts.
(b) Hold the sliding pin and torque the installation bolts.
Torque: 34 N–m (350 kgf–cm, 25 ft–lbf)

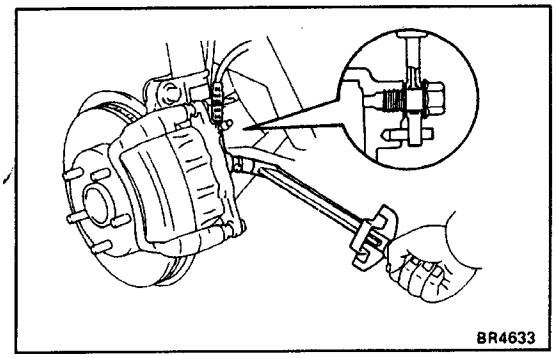

3. CONNECT FLEXIBLE HOSE

Install the flexible hose on the brake cylinder with two new gaskets.
Torque: 30 N–m (310 kgf–cm, 22 ft–lbf)

HINT: Install the flexible hose lock securely in the lock hole in the brake cylinder.

4. FILL BRAKE RESERVOIR WITH BRAKE FLUID AND BLEED BRAKE SYSTEM

(See page BR–9)

5. CHECK FOR LEAKS

BR069–01

PD51 DISC (For 5S–FE)
COMPONENTS

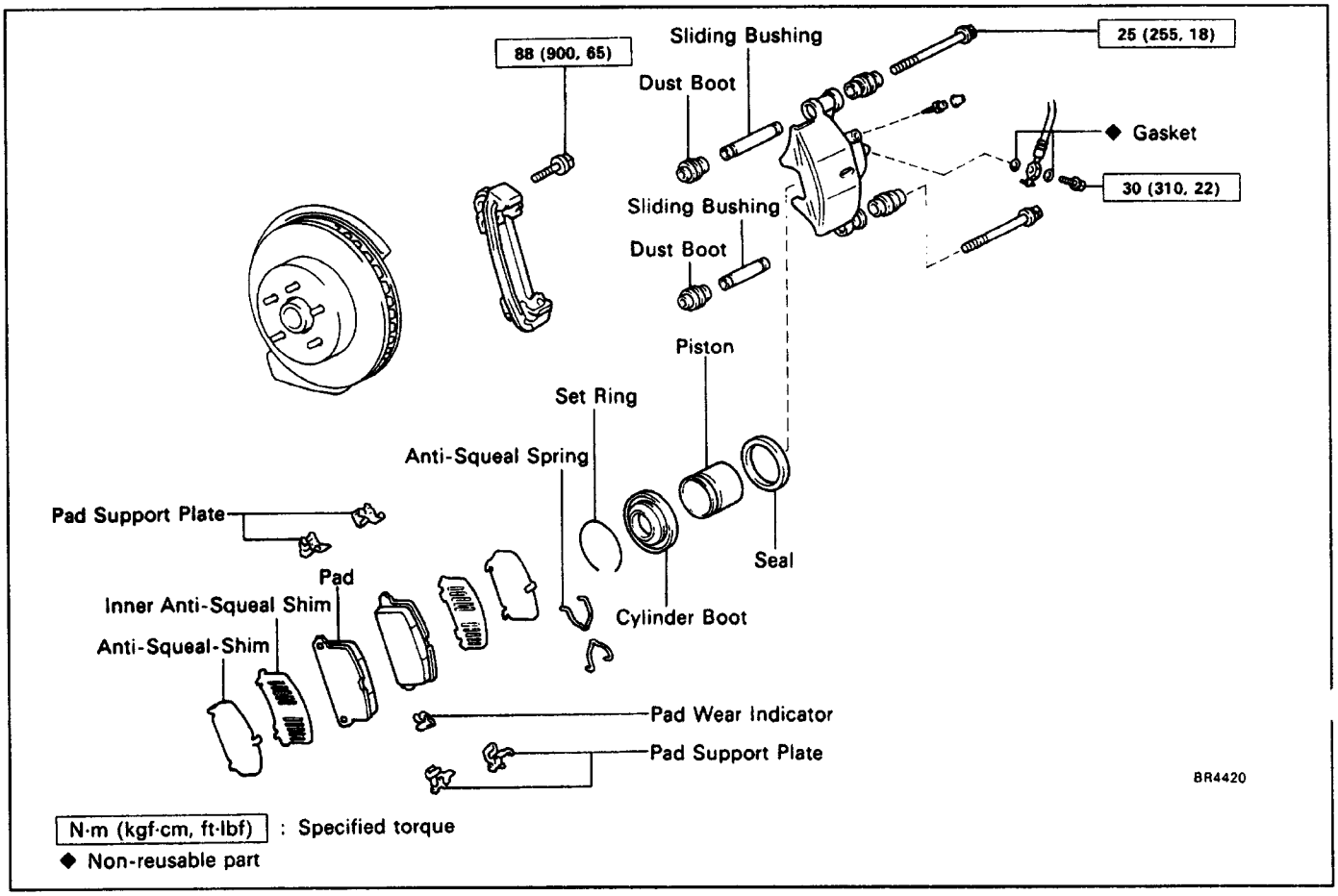

BR06A–01

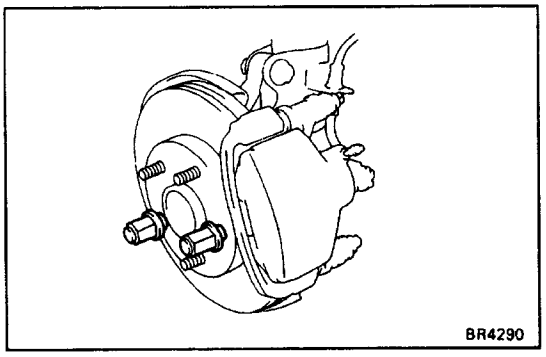

BRAKE PADS REPLACEMENT

1. REMOVE FRONT WHEEL

Remove the wheel and temporarily fasten the rotor disc with hub nuts.

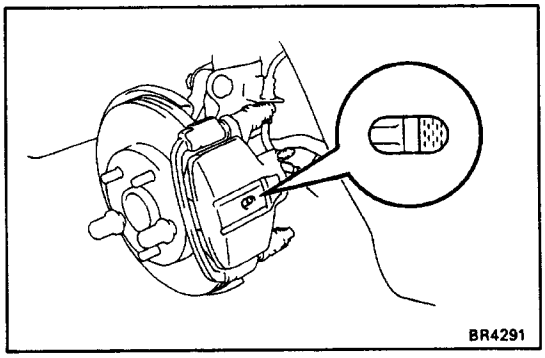

2. INSPECT PAD LINING THICKNESS

Check the pad thickness through the cylinder inspection hole and replace the pads if it is not within specification.

Minimum thickness:

1.0 mm (0.039 in.)

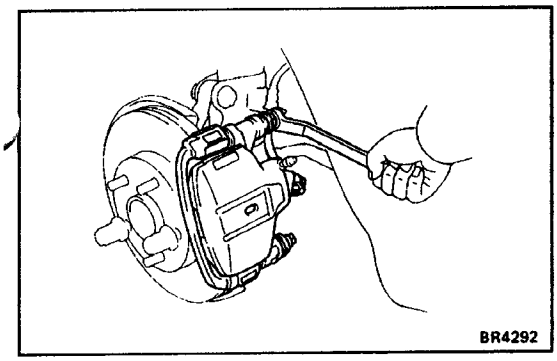

3. REMOVE CYLINDER FROM TORQUE PLATE

(a) Remove two installation bolts from the torque plate.

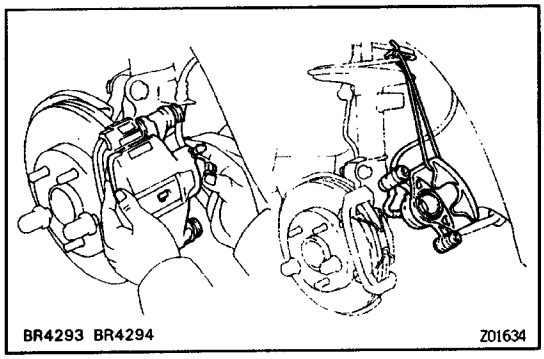

(b) Remove the brake cylinder and suspend it so the hose is not stretched.

HINT: Do not disconnect the brake hose.

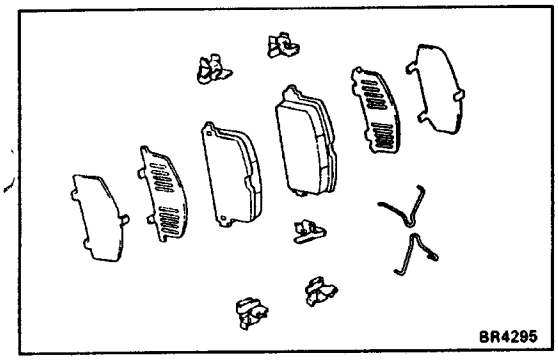

4. REMOVE FOLLOWING PARTS:

(a) Two anti–squeal springs
(b) Two brake pads
(c) Four anti–squeal shims
(d) Pad wear indicator plate
(e) Four pad support plates

5. CHECK ROTOR DISC THICKNESS AND RUNOUT
(See page BR–30**)**

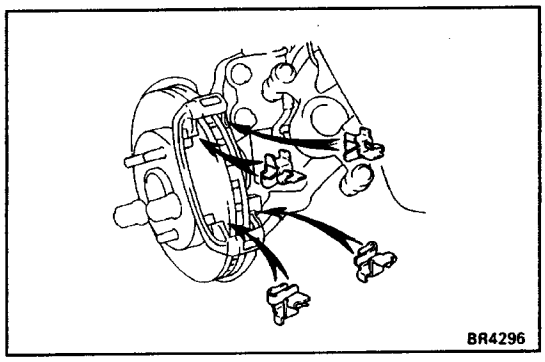

6. INSTALL PAD SUPPORT PLATES

Install the pad support plates.

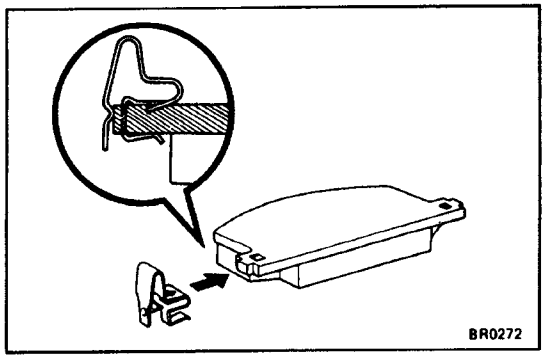

7. INSTALL NEW PADS

(a) Install a pad wear indicator plate on the inside pad.
(b) Apply disc brake grease to both sides of the two inner anti–squeal shims.
(c) Install the two anti–squeal shims to the each pad.

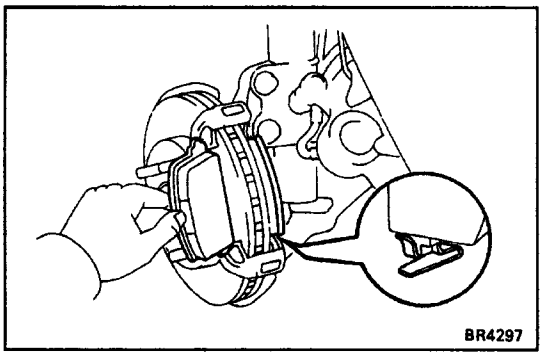

(d) Install inside pad with the pad wear indicator plate facing downward.
(e) Install outside pad.

NOTICE: There should be no oil or grease adhering to the friction surfaces of the pads or the rotor disc.

(f) Install the two anti–squeal springs.

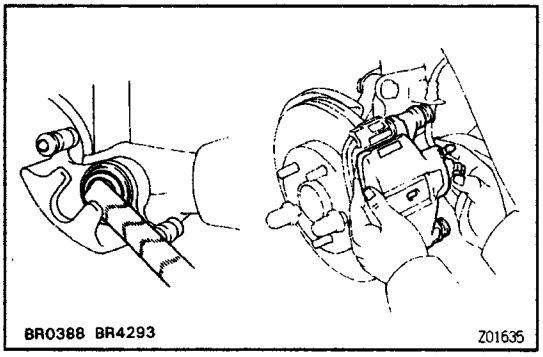

8. INSTALL CYLINDER

(a) Draw out a small amount of brake fluid from the reservoir tank.
(b) Press in the piston with a hammer handle or an equ–ivalent.

HINT: If the piston is difficult to push in, loosen the bleeder plug and push in the piston while letting some brake fluid escape.

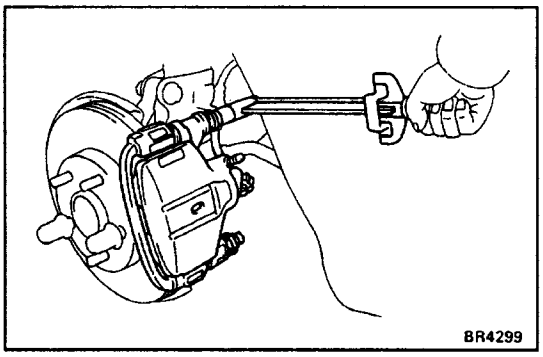

(c) Install the brake cylinder.
(d) Install and torque the two installation bolts.

Torque: 25 N–m (255 kgf–cm, 18 ft–lbf)

9. INSTALL FRONT WHEEL

10. CHECK THAT FLUID LEVEL IS MAX LINE

BR0SB–01

CYLINDER REMOVAL

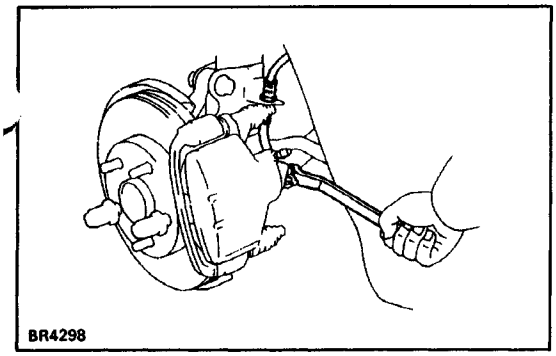
BR4298

1. DISCONNECT FLEXIBLE HOSE

(a) Remove the union bolt and two gaskets from the brake cylinder, then disconnect the flexible hose from the brake cylinder.

(b) Use a container to catch the brake fluid as it drains out.

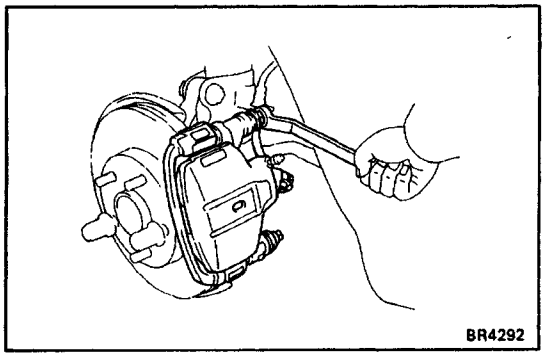
BR4292

2. REMOVE CYLINDER FROM TORQUE PLATE

Remove the two installation bolts and cylinder.

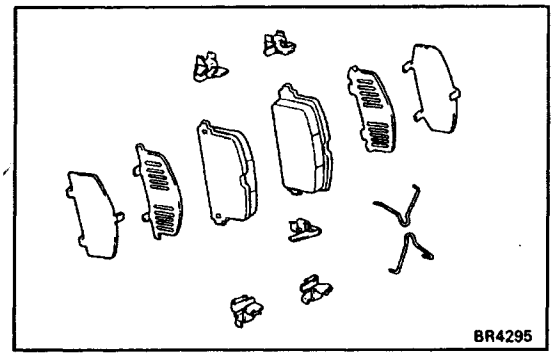
BR4295

3. REMOVE FOLLOWING PARTS:

(a) Two anti–squeal springs

(b) Two brake pads

(c) Four anti–squeal shims

(d) Pad wear indicator

(e) Four pad support plates

BR0BC–01

CYLINDER DISASSEMBLY

1. REMOVE FOLLOWING PARTS:

(a) Two sliding bushings

(b) Four dust boots

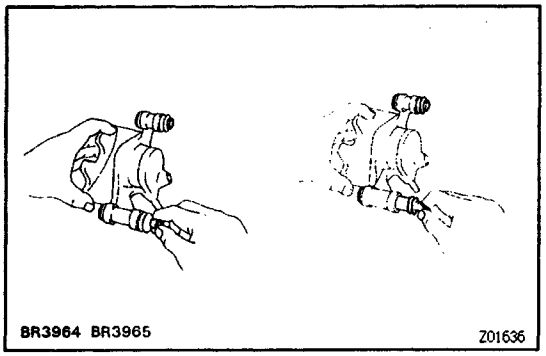
BR3964 BR3965 Z01636

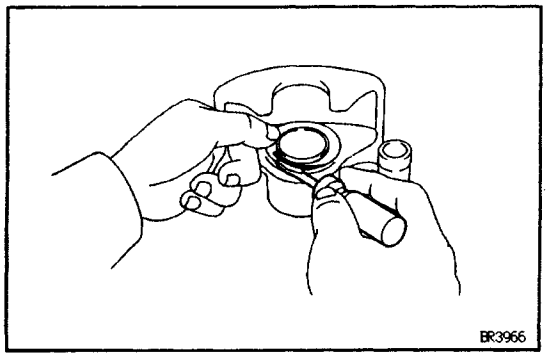
BR3966

2. REMOVE CYLINDER BOOT SET RING AND CYLINDER BOOT

Using a screwdriver, remove the cylinder boot set ring and cylinder boot.

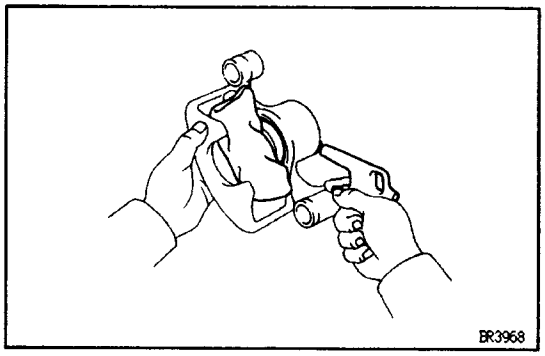

3. REMOVE PISTON FROM CYLINDER

(a) Put a piece of cloth or an equivalent between the piston and the cylinder.

(b) Use compressed air to remove the piston from the cylinder.

CAUTION: Do not place your fingers in front of the piston when using compressed air.

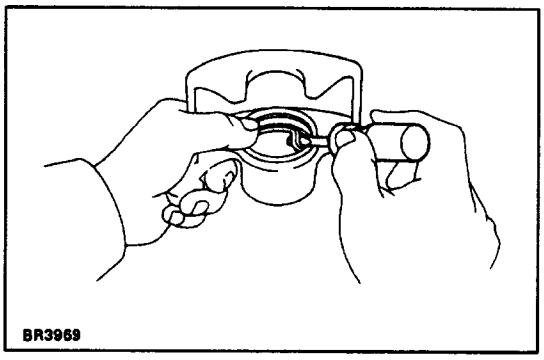

4. REMOVE PISTON SEAL FROM BRAKE CYLINDER

Using a screwdriver, remove the piston seal.

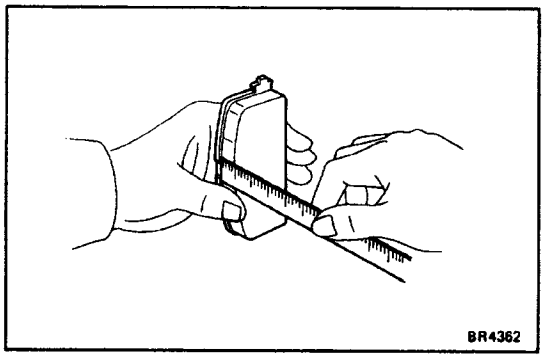

BR06D – 01

FRONT BRAKE COMPONENTS INSPECTION

1. MEASURE PAD LINING THICKNESS

Standard thickness:

10.0 mm (0.39 in.)

Minimum thickness:

1.0 mm (0.039 in.)

Replace the pad if the thickness is less than the minimum of if it shows sign of uneven wear.

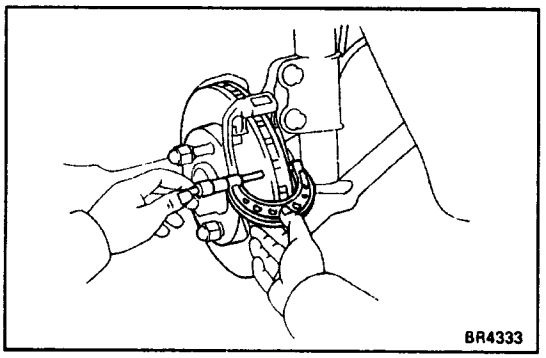

2. MEASURE ROTOR DISC THICKNESS

Standard thickness:

25.0 mm (0.984 in.)

Minimum thickness:

24.0 mm (0.945 in.)

If the disc is scored or worm, of if thickness is less than minimum, repair or replace the disc.

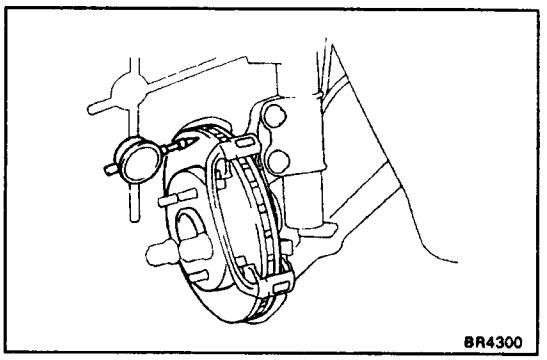

3. MEASURE ROTOR DISC RUNOUT

HINT: Before measuring the runout, confirm that the front hub bearing play is within specification.

Measure the rotor disc runout at 10 mm (0.39 in.) from the outer edge of the rotor disc.

Maximum disc runout:

0.07 mm (0.0028 in.)

If the runout is greater than the maximum, inspect and adjust if following the procedure below.

Then replace the disc if necessary.

(a) Remove the torque plate from the knuckle.

(b) Remove the hub nuts the temporarily installed disc and pull off the rotor disc.

(c) check that the hub axial play is within specification, and replace the bearing if not within specification. (See page SA–12)

(d) Install the rotor disc and measure the disc runout, then shift the rotor disc one fifth of a turn or one fourth of a turn, and measure the disc runout. Similarly measure the runout at each position, and select the position where the runout is minimum.

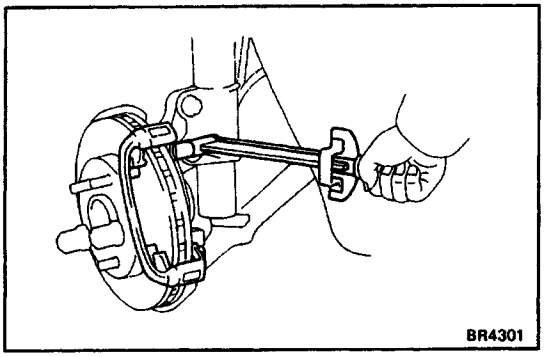

(e) In this position, if the runout is within specification, install the torque plate and torque the mounting bolts.

Torque: 88 N–m (900 kgf–cm, 65 ft–lbf)

(f) If not within specification, replace the rotor disc, and repeat (d) and (e).

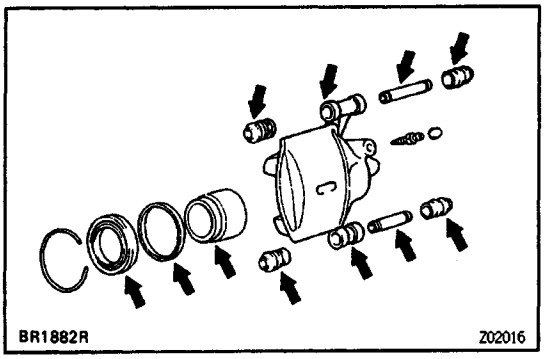

BR05E–01

CYLINDER ASSEMBLY

1. APPLY LITHIUM SOAP BASE GLYCOL GREASE TO PARTS INDICATED WITH ARROWS

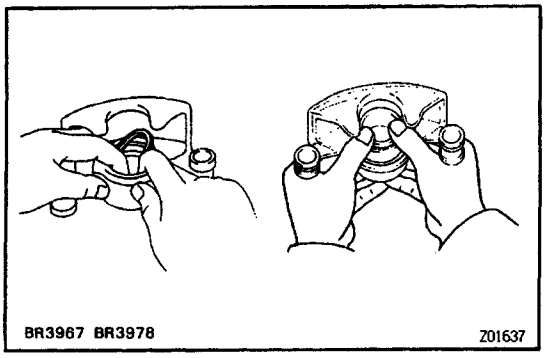

2. INSTALL PISTON SEAL AND PISTON IN CYLINDER

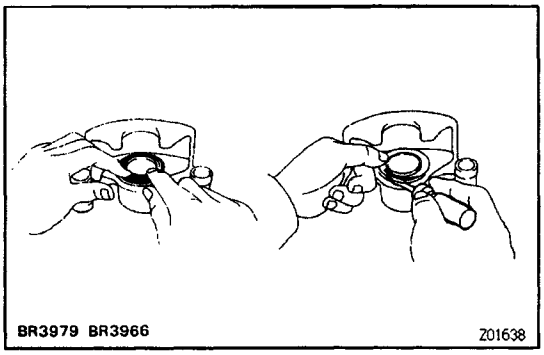

3. INSTALL CYLINDER BOOT AND RING IN CYLINDER

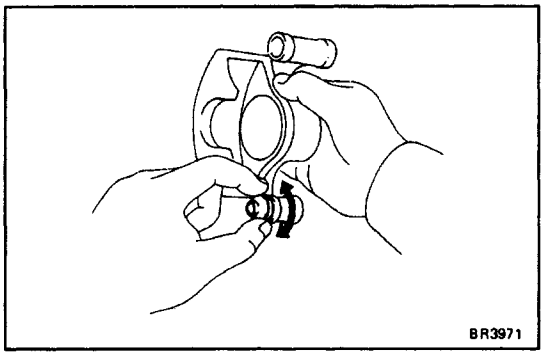

4. INSTALL DUST BOOTS AND CYLINDER SLIDING BUSHINGS

(a) Install the dust boots into the brake cylinder.
(b) Insure that the boots is secured firmly to the brake cylinder grooves.

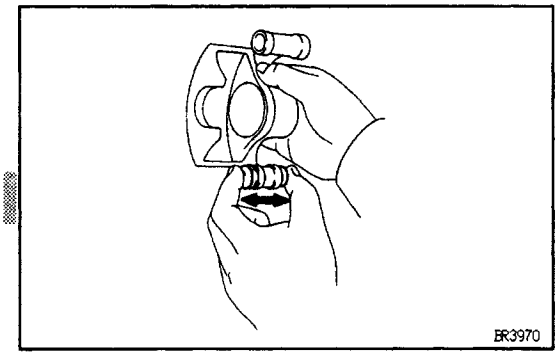

(c) Install the bushing into the boots.
(d) Insure that the boots is secured firmly to the bushing grooves.

8R06F – 01

CYLINDER INSTALLATION

1. INSTALL FOLLOWING PARTS:

(a) Four pad support plates
(b) Pad wear indicator
(c) Four anti–squeal shims
(d) Two brake pads
(e) Two anti–squeal springs

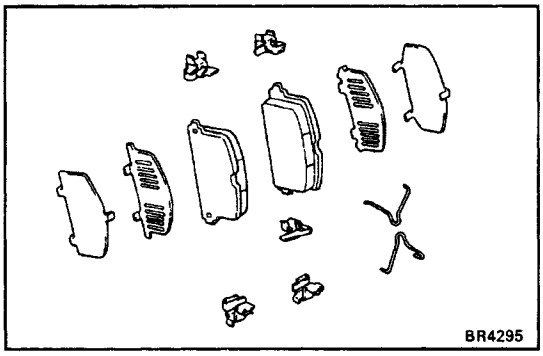

2. INSTALL CYLINDER

(a) Install the brake cylinder.
(b) Install and torque the two installation bolts.
Torque: 25 N–m (255 kgf–cm, 18 ft–lbf)

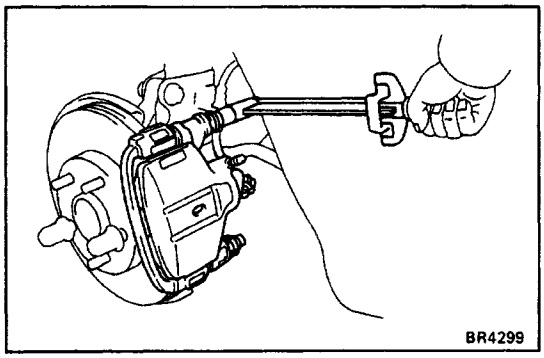

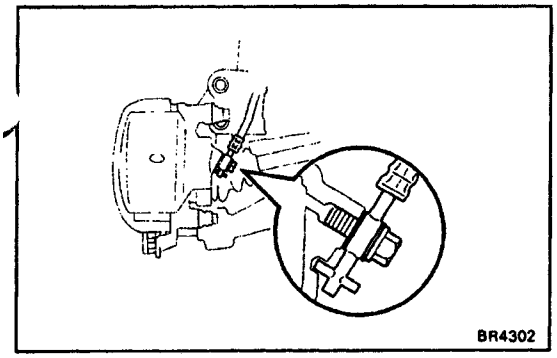

3. INSTALL FLEXIBLE HOSE

Install the flexible hose on the brake cylinder with two new gaskets.

Torque: 30 N–m (310 kgf–cm, 22 ft–lbf)

HINT: Insert the flexible hose lock securely in the lock hole in brake
cylinder.

4. FILL BRAKE RESERVOIR WITH BRAKE FLUID AND BLEED BRAKE SYSTEM

(See page BR–9**)**

5. CHECK FOR LEAKS

BRAKE SYSTEM

GENERAL DESCRIPTION

1. Care must be taken to replace each part properly as it could affect the performance of the brake system and result in a driving hazard. Replace the parts with parts of the same part number or equivalent.
2. It is very important to keep parts and the area clean when repairing the brake system.

DESCRIPTION

The service brakes consist of a foot brake which changes rotational energy to thermal energy to stop the vehicle while it is being driven and a parking brake to keep the vehicle from moving while it is parked.

MASTER CYLINDER

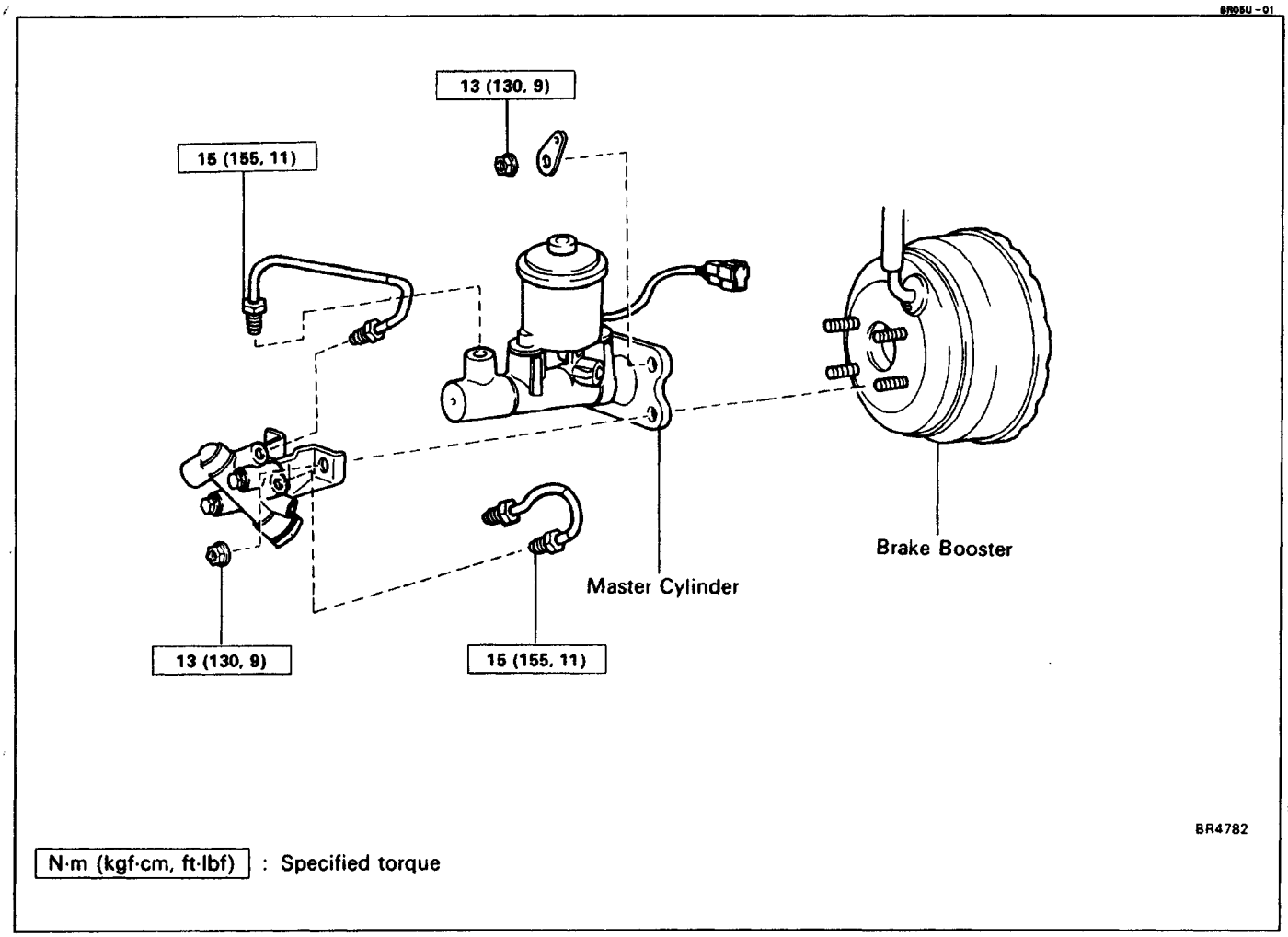

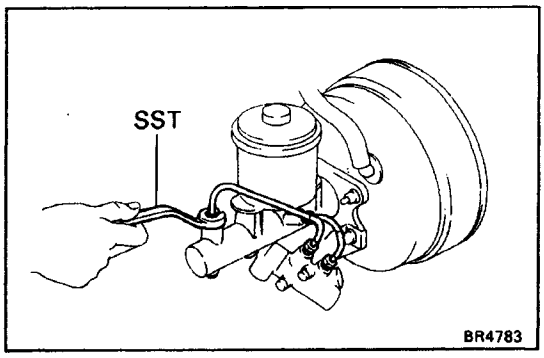

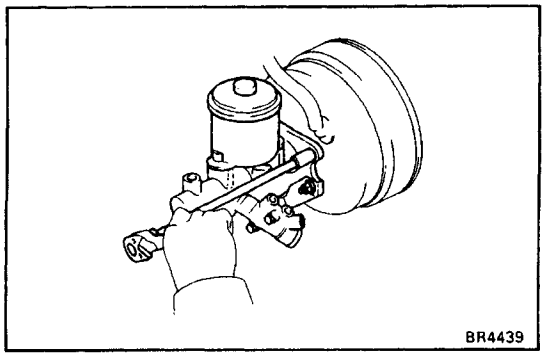

MASTER CYLINDER REMOVAL

1. DISCONNECT LEVEL WARNING SWITCH CON–NECTOR

2. DRAW OUT FLUID WITH SYRINGE

NOTICE: Do not let brake fluid remain on a painted sur–face. Wash it off immediately.

3. DISCONNECT BRAKE TUBES

Using SST, disconnect the brake tubes from the master cylinder.

SST 09751 –3601 1

4. REMOVE MASTER CYLINDER

(a) Remove the four nuts.

(b) (w/ABS)

Remove the P valve with the P valve bracket.

(c) Remove the master cylinder.

COMPONENTS

BR05V–01

w/o ABS

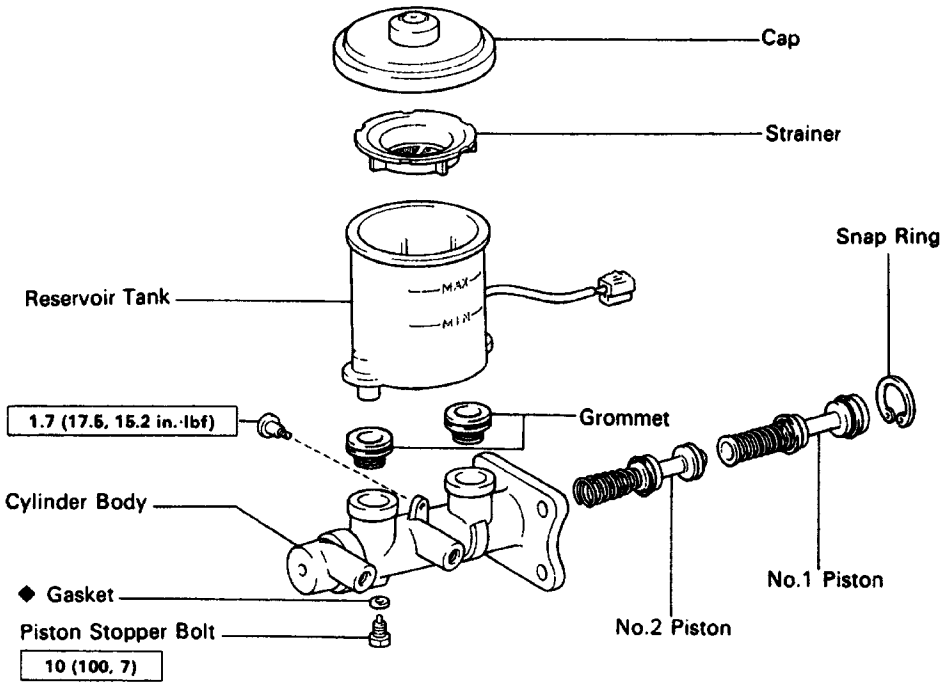

w/ ABS

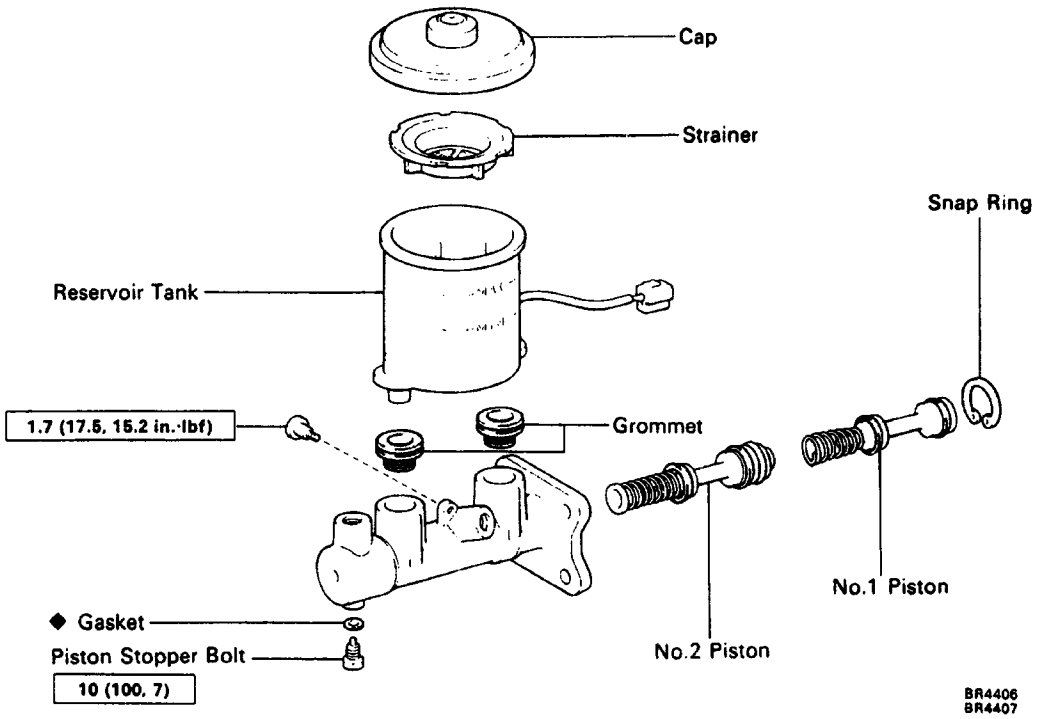

N·m (kgf·cm, ft·lbf) : Specified torque

◆ Non-reusable part

Z02694

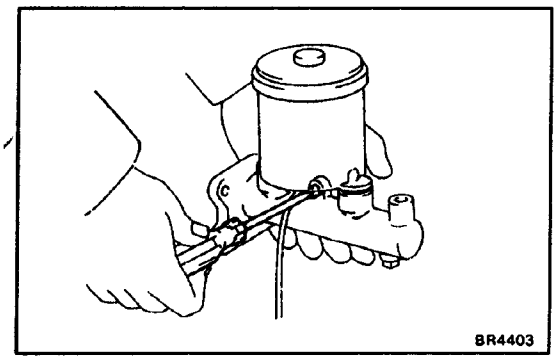

MASTER CYLINDER DISASSEMBLY BR05W-01

1. REMOVE RESERVOIR TANK

(a) Remove the set screw and pull out the reservoir tank.

(b) Remove the cap and strainer from the reservoir tank.

2. REMOVE TWO GROMMETS

3. PLACE CYLINDER IN VISE

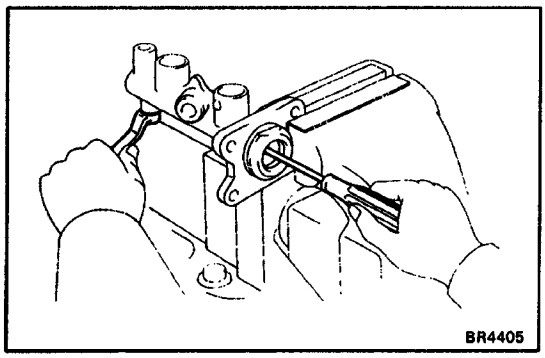

4. REMOVE PISTON STOPPER BOLT

Using a screwdriver, push the pistons in all the way and remove the piston stopper bolt and gasket.

HINT: Tape the screwdriver tip before use.

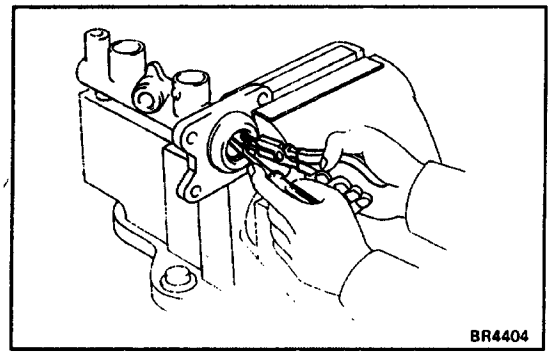

5. REMOVE TWO PISTONS

(a) push in the piston with a screwdriver and remove the snap ring with snap ring pliers.

(b) Remove the No.1 piston and spring by hand, pulling straight out, not at an angle.

NOTICE: If pulled out at an angle, there is possibility that the cylinder bore could be damaged.

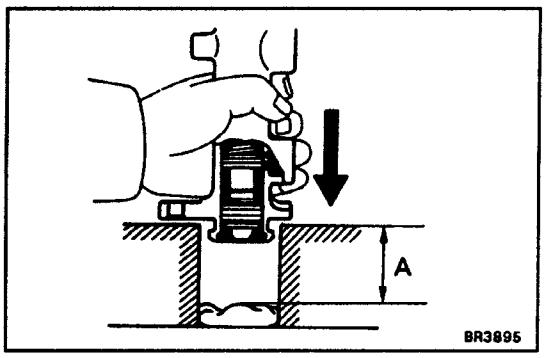

(c) Place a rag and two wooden blocks on the work table and lightly tap the cylinder flange against the block edges until the piston drops out of the cylinder.

HINT: Make sure the distance (A) from the rag to the top of the blocks is at least 100 mm (3.94 in.).

MASTER CYLINDER COMPONENTS' INSPECTION BR05X-01

HINT: Clean the disassembled parts with compressed air.

1. INSPECT CYLINDER BORE FOR RUST OR SCORING

2. INSPECT CYLINDER FOR WEAR OR DAMAGE

If necessary, clean or replace the cylinder.

BR05Y – 01

MASTER CYLINDER ASSEMBLY

1. APPLY LITHIUM SOAP BASE GLYCOL GREASE TO RUBBER PARTS INDICATED BY ARROWS

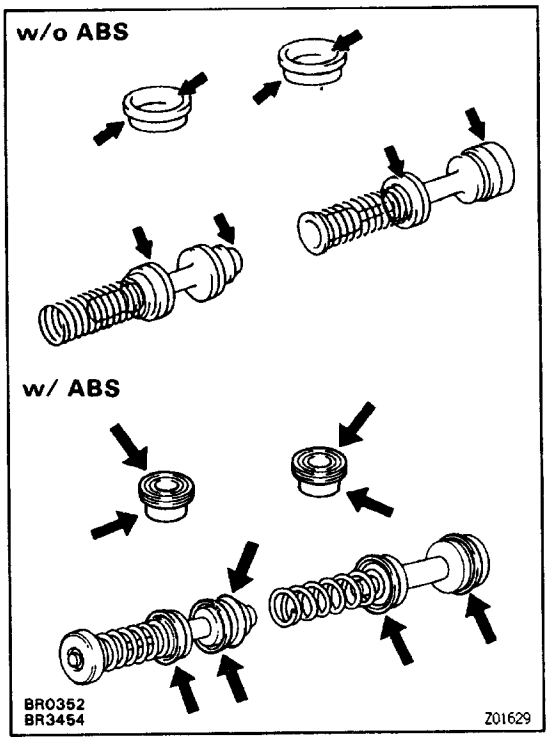

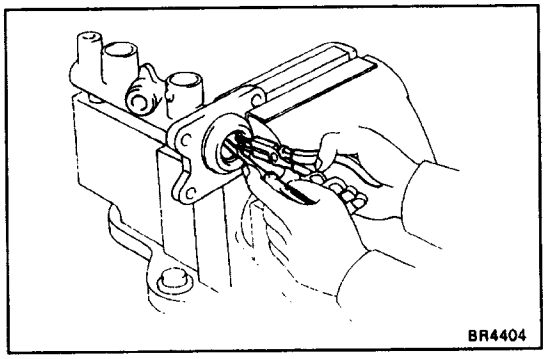

2. INSTALL TWO SPRINGS

NOTICE: Be careful not to damage the rubber lips on the pistons.

(a) Install the two piston straight in, not at an angle.

NOTICE: If inserted at angle, there is a possibility that the cylinder bore could be damaged.

(b) Push in the piston with a screwdriver and install the snap ring with snap ring pliers.

HINT: Tape the screwdriver tip before use.

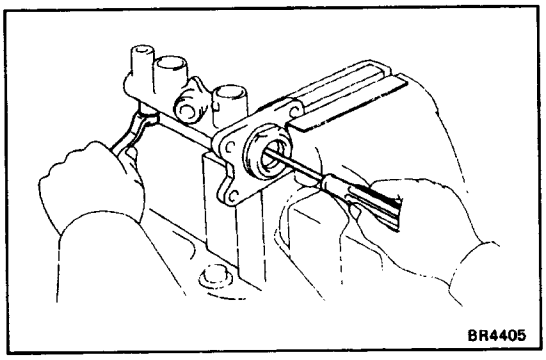

3. INSTALL PISTON STOPPER BOLT

Using a screwdriver, push the piston in all the way and install the piston stopper bolt over the gasket. Torque the bolt.

Torque: 10 N–m (100 kgf–cm, 7 ft–lbf)

4. INSTALL TWO GROMMETS

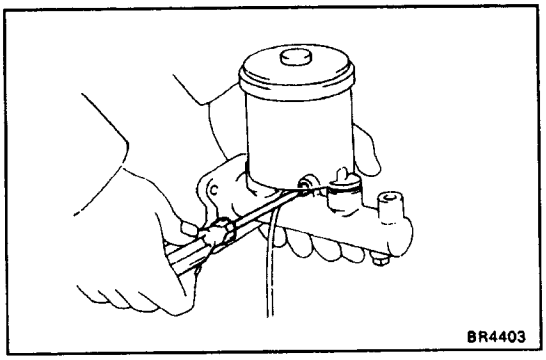

5. INSTALL RESERVOIR TANK

(a) Install the cap and strainer to the reservoir tank.

(b) Push the reservoir tank onto the cylinder.

(c) Install the set screw while pushing on the reservoi tank.

Torque: 1.7 N–m (17.5 kgf–cm, 15.2 ft–lbf)

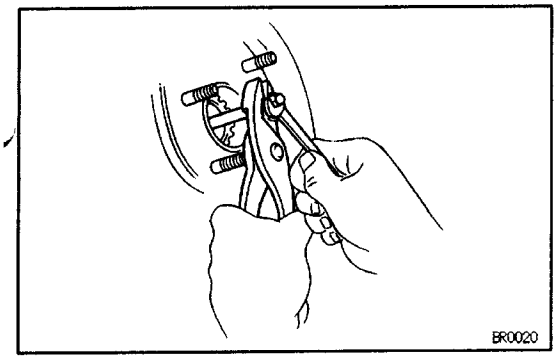

MASTER CYLINDER INSTALLATION

BR05Z–01

1. ADJUST LENGTH OF BRAKE BOOSTER PUSH ROD BEFORE INSTALLING MASTER CYLINDER

(See page BR–17**)**

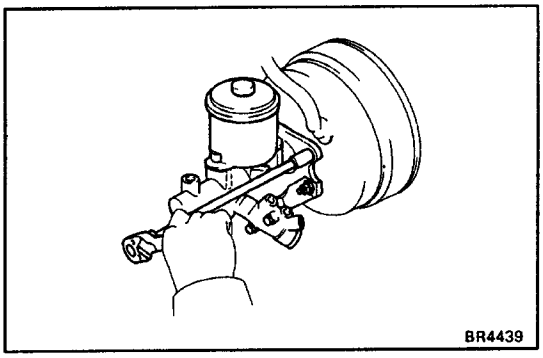

2. INSTALL MASTER CYLINDER

(a) Install the master cylinder.
(b) Install the P & BV with the P & BV bracket.
(c) Install the four nuts and torque nuts.
Torque: 13 N–m (130 kgf–cm, 9 ft–lbf)

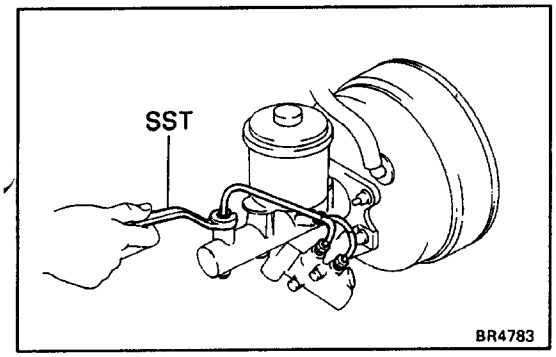

3. CONNECT TWO BRAKE TUBES

Using SST, connect the brake tubes to the master cylinder. Torque the union nuts.
SST 09751 – 36011
Torque: 15 N–m (155 kgf–cm, 11 ft–lbf)

4. CONNECT LEVEL WARNING SWITCH CONNECTOR

5. FILL BRAKE RESERVOIR WITH BRAKE FLUID AND BLEED BRAKE SYSTEM

(See page BR–9**)**

6. CHECK FOR FLUID LEAKAGE

7. CHECK AND ADJUST BRAKE PEDAL

(See page BR–7**)**

OPERATION

BR06R-01

FOOT BRAKE

When the brake pedal is depressed, a vacuum builds up in the booster which amplifies the pedal force, pressing on the piston in the master cylinder. The piston raises the hydraulic pressure in the cylinder. This hydraulic pressure is then applied to each front brake cylinder and rear wheel cylinder (or rear brake cylinder), and acts to press the front brake pads and rear brake pads (or rear brake shoes) against the rotating rotor discs (or brake drums). The resulting friction converts the rotational energy to thermal energy, stopping the vehicle.

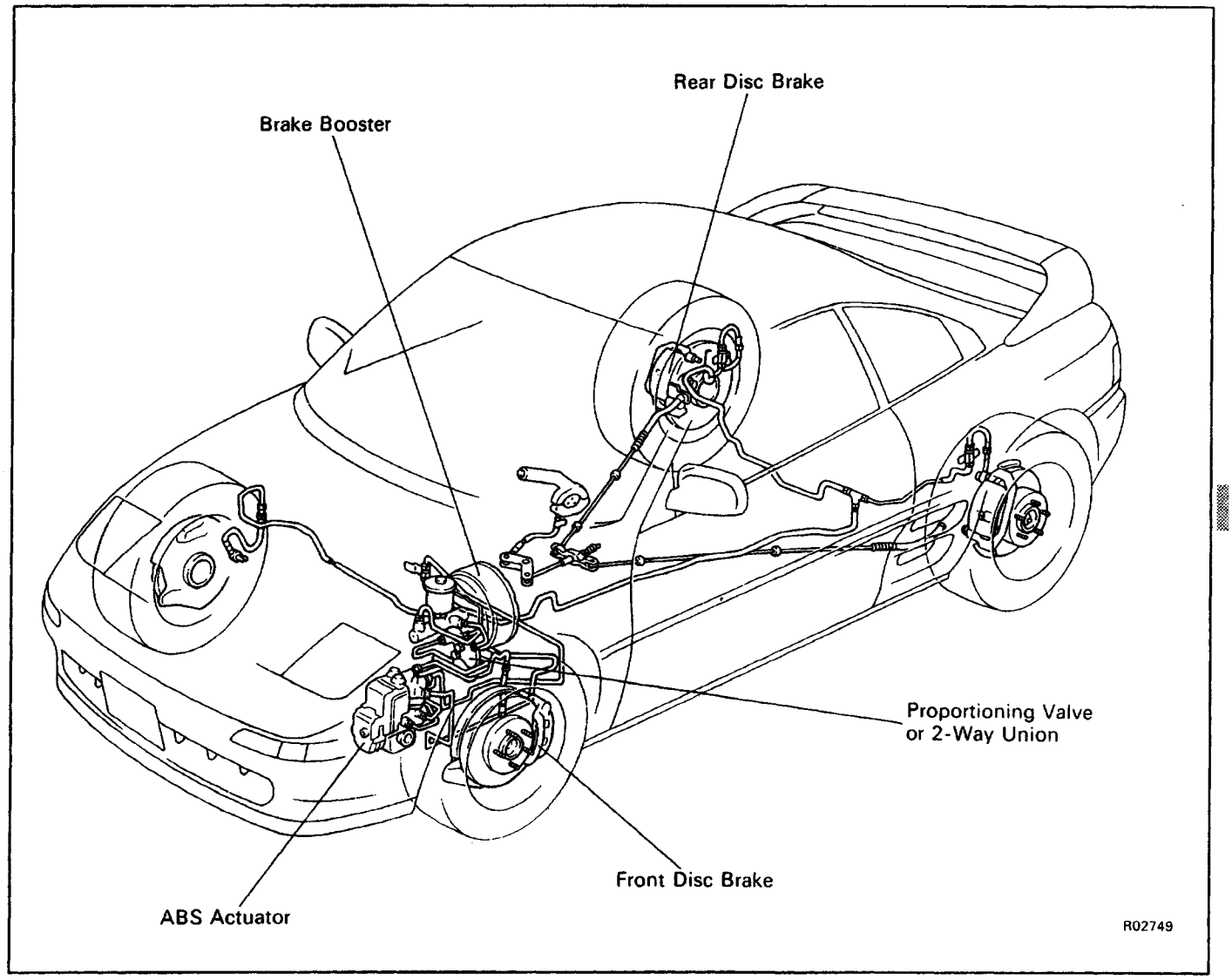

PREPARATION

SST (SPECIAL SERVICE TOOLS)

BR06S – 01

	09023–00100 Union Nut Wrench 10 mm	
	09703–30010 Brake Shoe Return Spring Tool	
	09709–29017 LSPV Gauge Set	
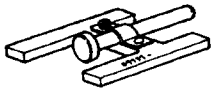	09737–00010 Brake Booster Push Rod Gauge	
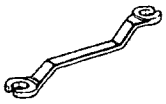	09751–36011 Brake Tube Union Nut 10 x 12 mm Wrench	
	09843–18020 Diagnosis Check Wire	
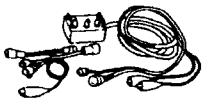	09990–00150 ABS Actuator Checker and Sub–harness	
	09990–00163 ABS Actuator Checker Sheet ”A”	
	09990–00200 ABS Actuator Checker Sub–harness ”C”	
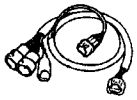	09990–00210 ABS Actuator Checker Sub–harness “E”	

BR0ST – 01

EQUIPMENT

Torque wrench	
Micrometer	
Dial indicator	
Vernier calipers	

BR0SU – 01

LUBRICANT

Item	Capacity	Classification
Brake fluid	–	SAEJ 1703 or FMVSS No. 116 DOT 3

PROPORTIONING AND BY–PASS VALVE (P & B VALVE)

BR070–01

FLUID PRESSURE INSPECTION

1. INSTALL LSPV GAUGE (SST) AND BLEED AIR

SST 09709–29017

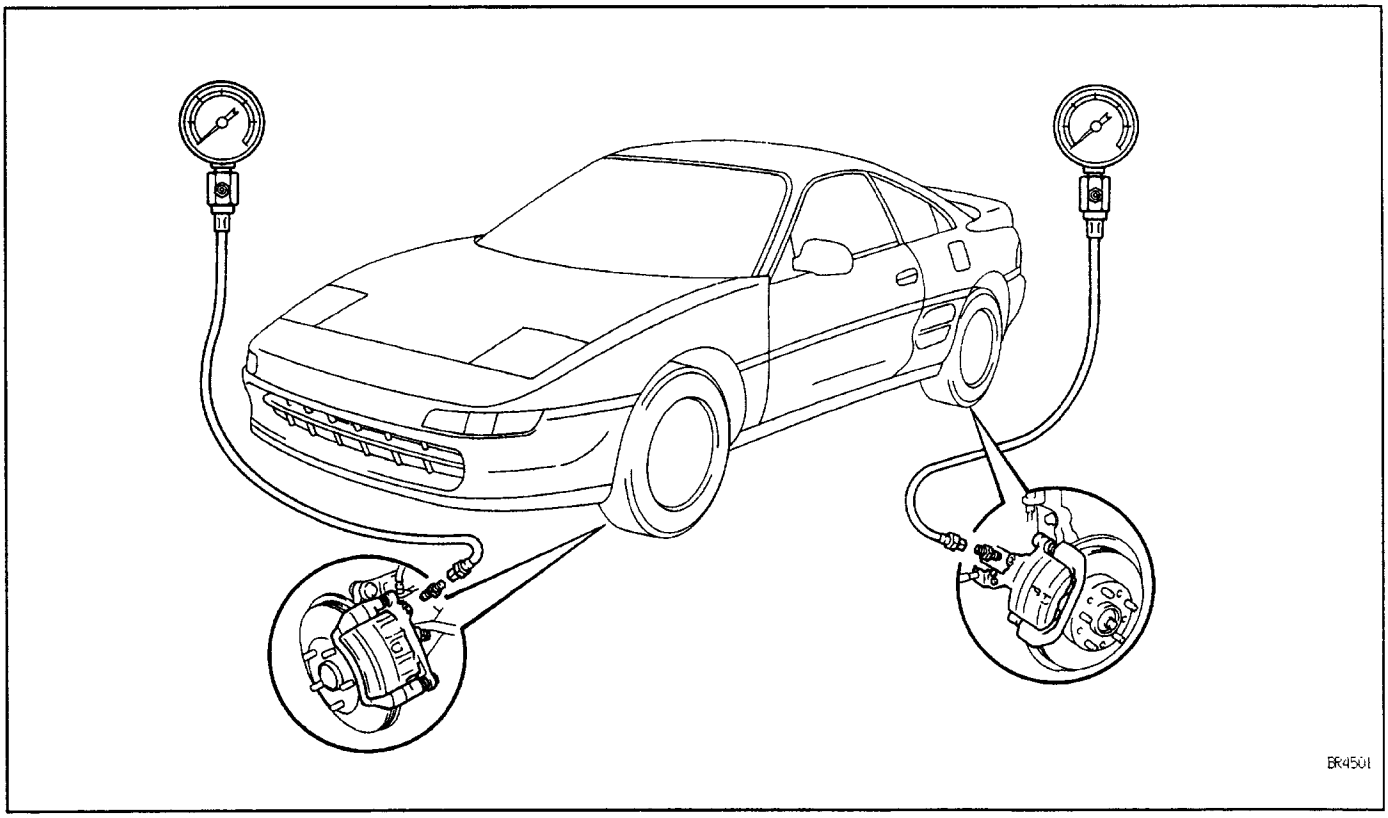

BR4501

2. RAISE MASTER CYLINDER PRESSURE AND CHECK REAR WHEEL CYLINDER PRESSURE

Specifications

	Master cylinder pressure	Rear wheel cylinder pressure
5S–FE	2,942 kPa (30 kgf/cm^2, 427 psi)	2,942 kPa (30 kgf/cm^2, 427 psi)
	7,845 kPa (80 kgf/cm^2, 1,138 psi)	5,884 kPa (60 kgf/cm^2, 853 psi)
3S–GTE	5,884 kPa (60 kgf/cm^2, 853 psi)	5,884 kPa (60 kgf/cm^2, 853 psi)
	9,807 kPa (100 kgf/cm^2, 1,422 psi)	8,238 kPa (84 kgf/cm^2, 1,195 psi)

V01001

If the rear wheel cylinder pressure is incorrect, replace the P & B valve assembly.

3. BLEED BRAKE SYSTEM

4. CHECK FOR FLUID LEAKAGE

REAR BRAKE

BR06G–01

COMPONENTS

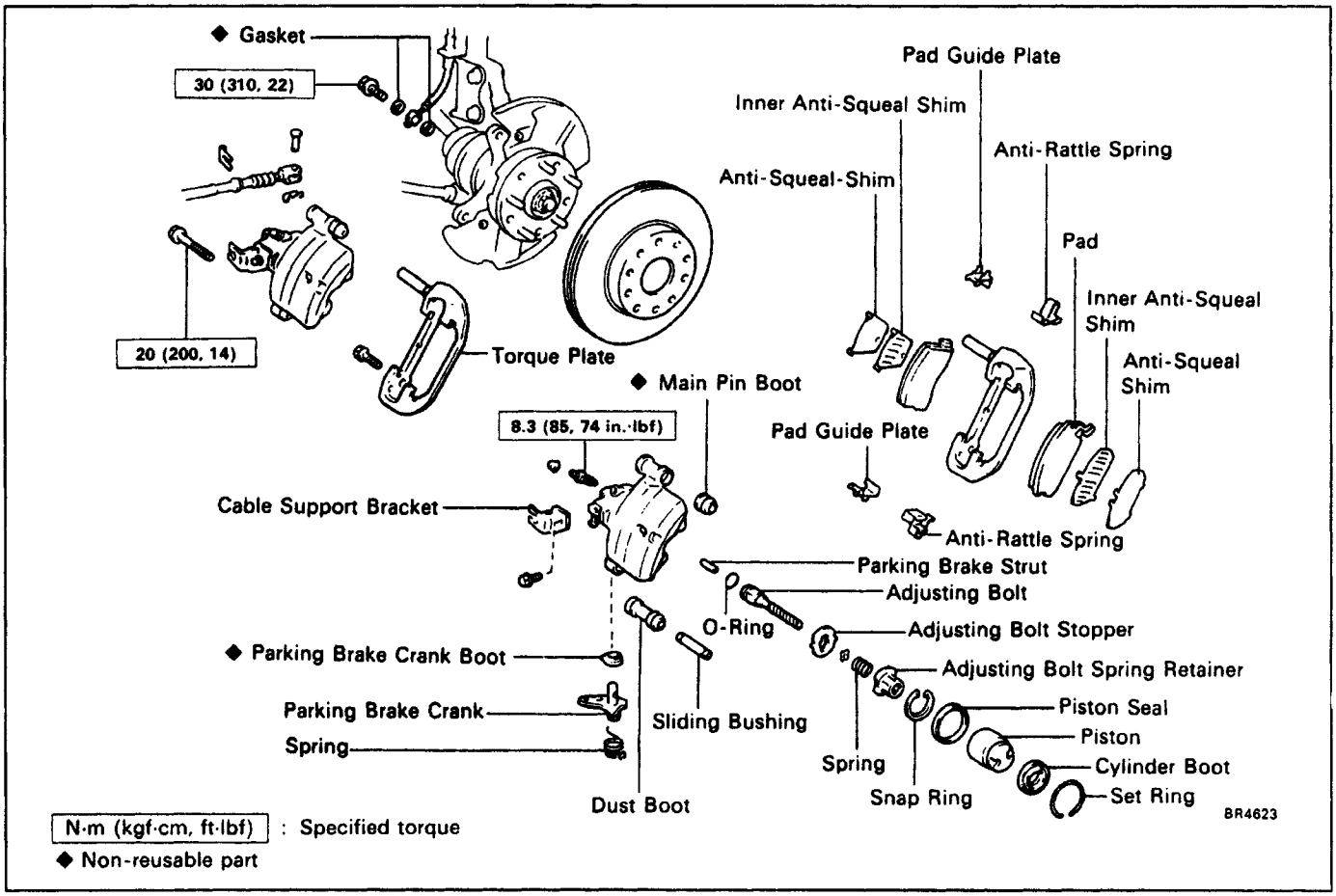

BR06H–01

BRAKE PADS REPLACEMENT

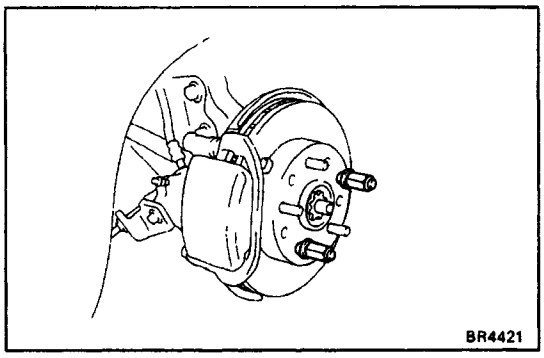

1. REMOVE REAR WHEEL

Remove the wheel and temporarily fasten the rotor disc with the hub nuts.

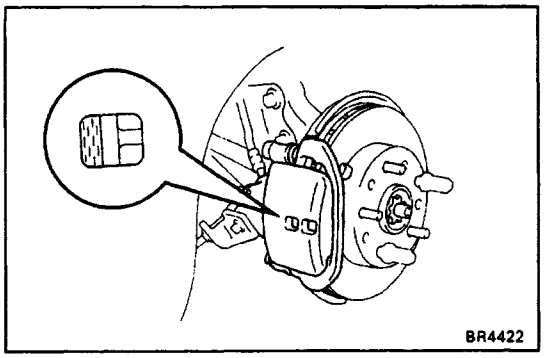

2. INSPECT PAD LINING THICKNESS

Check the pad thickness through the cylinder inspection hole and replace the pads if it is not within specification.

Minimum thickness:

1.0 mm (0.039 in.)

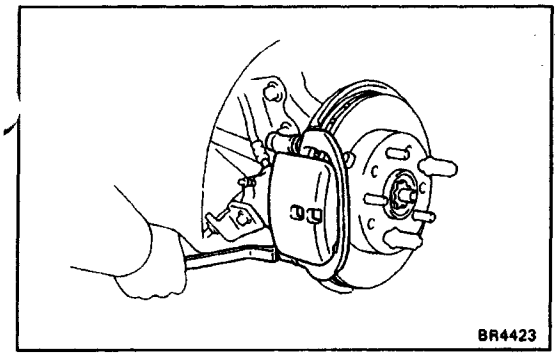

3. LIFT UP CYLINDER

(a) Remove the installation bolt from the torque plate.

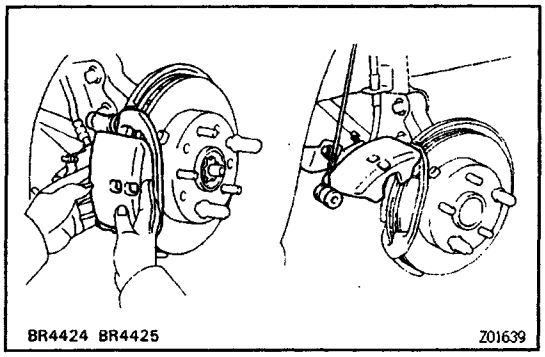

(b) Lift up the brake cylinder and suspend the cylinder with string.

HINT: Do not disconnect the flexible hose from the brake cylinder.

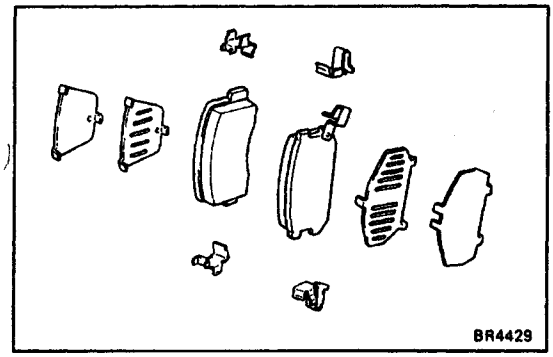

4. REMOVE FOLLOWING PARTS:

(a) Two brake pads
(b) Four anti–squeal shims
(c) Two anti–rattle springs
(d) Two pad guide plats

5. CHECK ROTOR DISC THICKNESS AND RUNOUT
(See page BR–41**)**

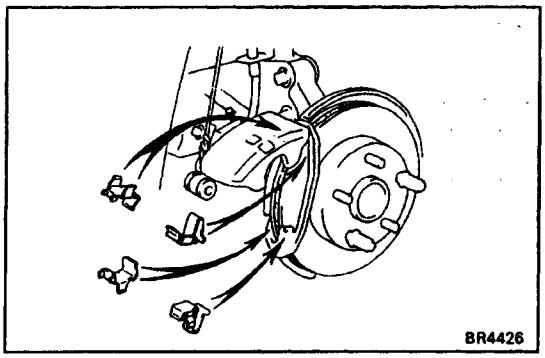

6. INSTALL PAD SUPPORT PLATES

Install the four pad support plates.

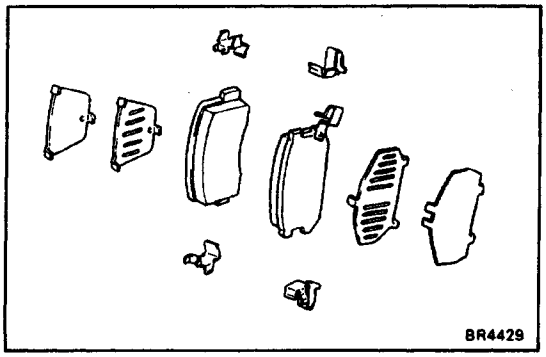

7. INSTALL NEW PADS

(a) Apply disc brake to both sides of the two inner anti–squeal shims.
(b) Install the two anti–squeal shims to the each pad.

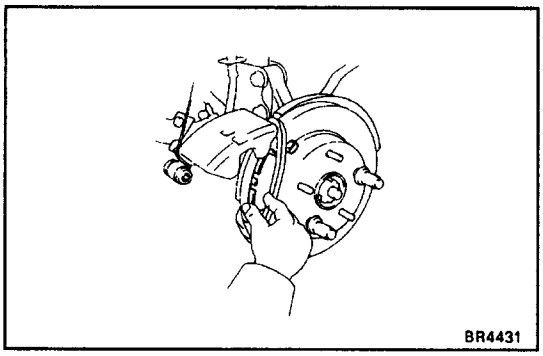

(c) Install the two pads.

NOTICE: There should be no oil grease adhering to the friction surfaces of the pads or the rotor disc.

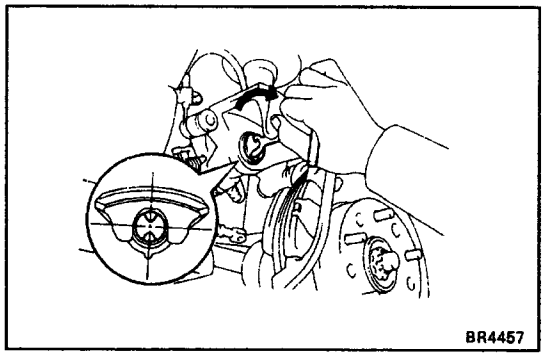

8. INSTALL CYLINDER

(a) Using SST, slowly turn piston clockwise until the piston turns freely, ten align the cylinder protrusion and piston stopper groove.

SST 09719–14020 (09718–00020)

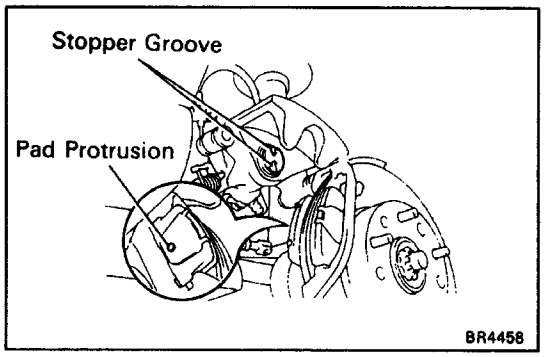

(b) Fit the pad protrusion into the piston stopper groove and install the cylinder.

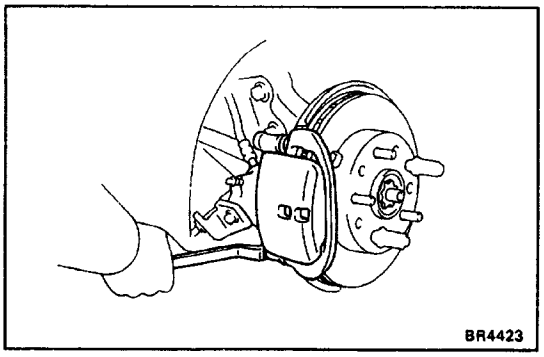

(c) Install and torque the installation bolt.

Torque: 20 N–m (200 kgf–cm, 14 ft–lbf)

9. INSTALL REAR WHEEL

10. CHECK THAT FLUID LEVEL IS MAX LINE

11. ADJUST PAD CLEARANCE

Depress the brake pedal for several times.

BR06J – 01

CYLINDER REMOVAL

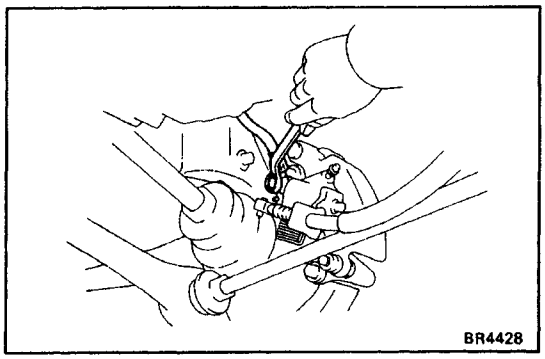

1. DISCONNECT FLEXIBLE HOSE

(a) Remove the union bolt and two gaskets, and disconnect the flexible hose.
(b) Use a container to catch the brake fluid.

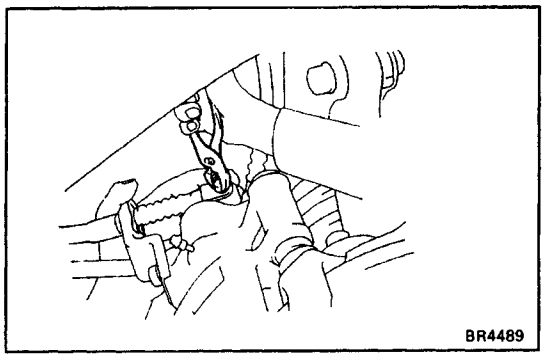

2. DISCONNECT PARKING BRAKE CABLE

(a) Remove the pin clip.
(b) Pull out the hole pin while pushing the parking brake crank.

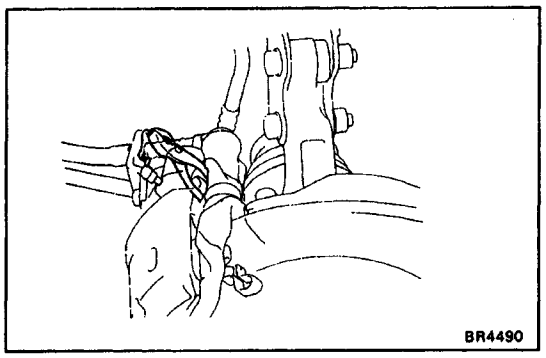

(c) Remove the clip.
(d) Remove the parking brake cable from the cable support bracket.

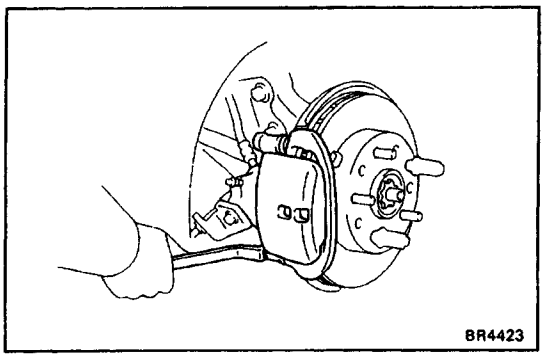

3. REMOVE CYLINDER

Remove the installation bolt, and remove the brake cylinder.

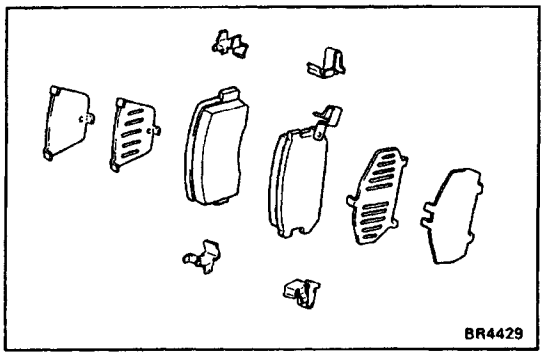

4. REMOVE FOLLOWING PARTS:

(a) Two brake pads
(b) Four anti–squeal shims
(c) Two anti–squeal springs
(d) Two pad guide plats

BR06K – 01

CYLINDER DISASSEMBLY

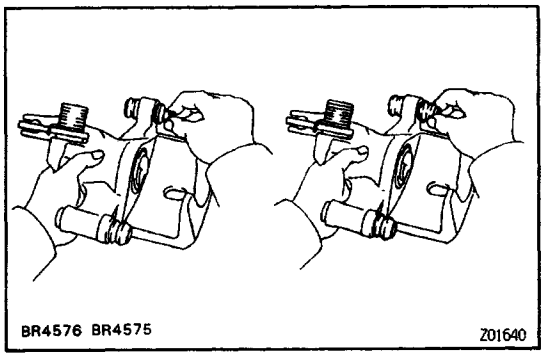

1. REMOVE DUST BOOT AND SLIDING BUSHING

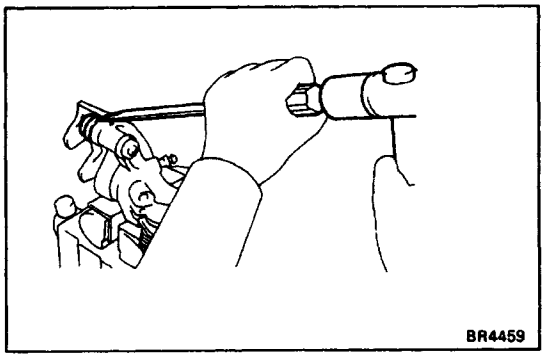

2. REMOVE MAIN PIN BOOT

Using a chisel and hammer, tap out the dust boots.

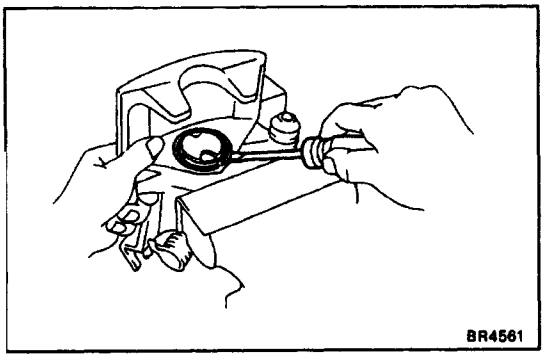

3. REMOVE CYLINDER BOOT SET RING AND CYLINDER BOOT

Using a screwdriver, remove the cylinder boot set ring and cylinder boot.

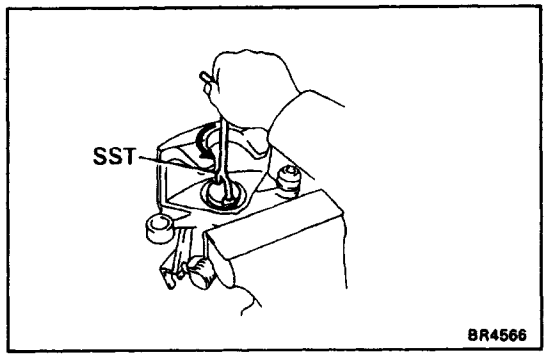

4. REMOVE PISTON FROM CYLINDER

Using SST, turn the piston counterclockwise and remove it.

SST 09719–14020

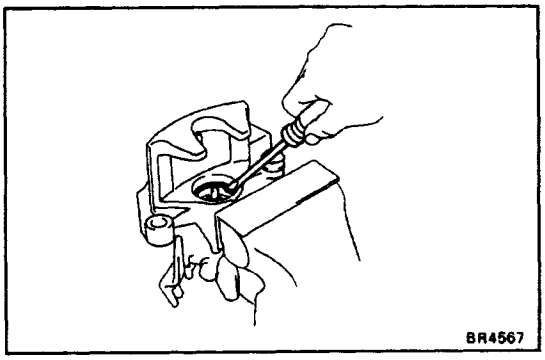

5. REMOVE PISTON SEAL FROM CYLINDER

Using a screwdriver, remove the piston seal.

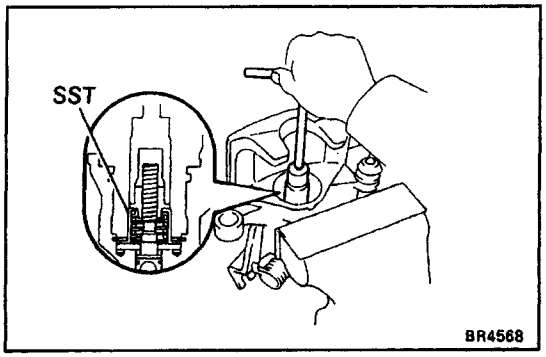

6. REMOVE ADJUSTING BOLT

(a) Set SST onto the adjusting bolt, and lightly tighten it with a 14 mm socket.
SST 09 756 – 00010

CAUTION:

- **To insure safety, always use SST as there is a possibility of the spring flying out, causing injury or damaging to the interior surface of the cylinder.**
- **Be careful not to tighten the SST too tightly as this may damage the spring retainer.**

(b) Using snap ring pliers, remove the snap ring from the cylinder.

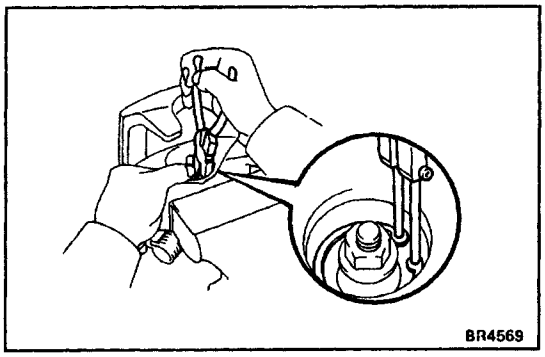

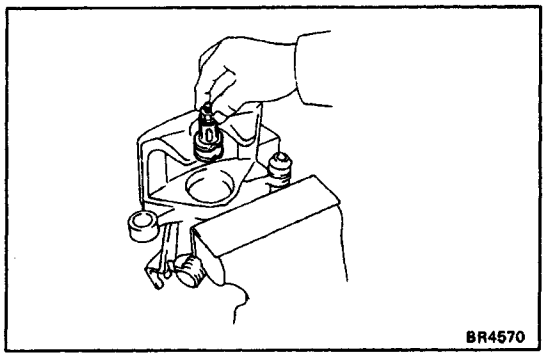

(c) Remove the parking brake strut, spring retainer, spring, spring plate and stopper together with the adjusting bolt from the cylinder.

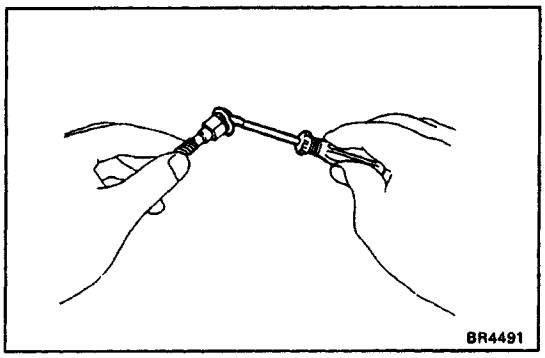

7. DISASSEMBLE ADJUSTING BOLT

(a) Remove SST.
SST 09576 – 00010

(b) Remove the spring retainer, spring, spring plate and stopper from the adjusting bolt.

(c) Remove the O–ring from the adjusting bolt.

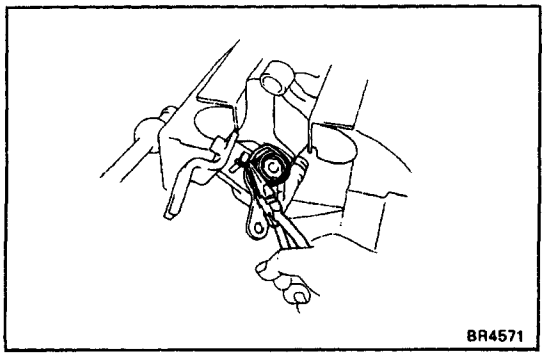

8. REMOVE TORSION SPRING FROM PARKING BRAKE CRANK

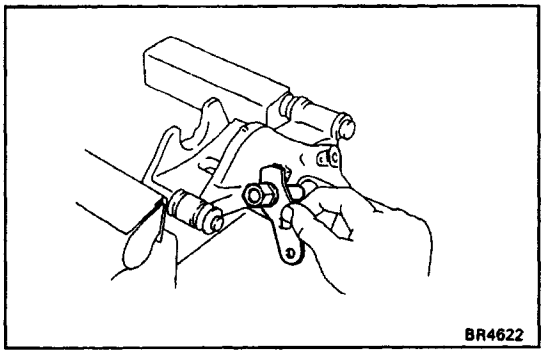

9. REMOVE PARKING BRAKE CRANK FROM CYLIN–DER

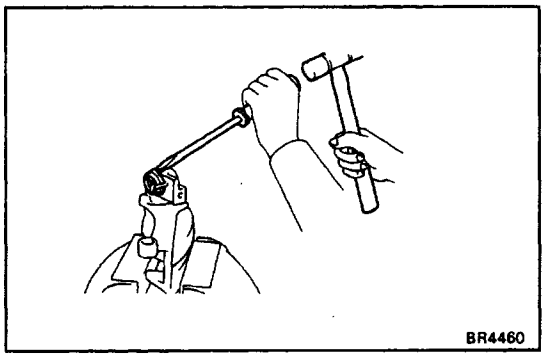

10. REMOVE PARKING BRAKE CRANK BOOT

Using a chisel and hammer, tap out the parking brake crank boot.

11. REMOVE CABLE SUPPORT BRACKET

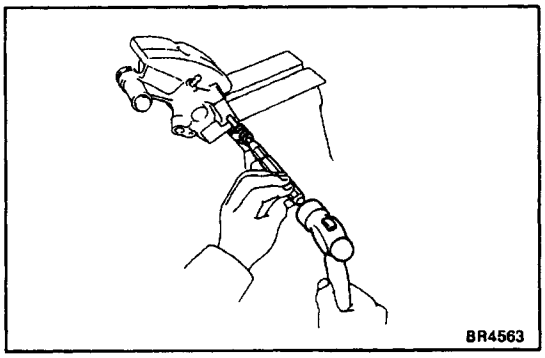

12. REMOVE STOPPER PIN

Using a pin punch, tap out the pin.

I°01L-01

REAR BRAKE COMPONENTS INSPECTION

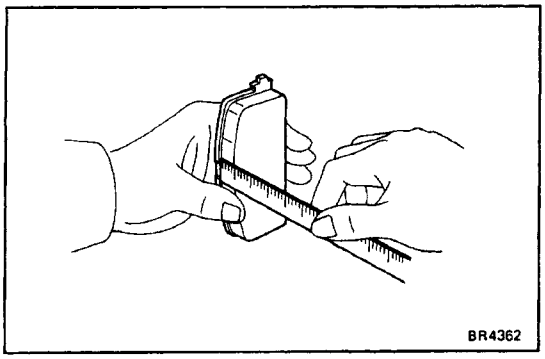
BR4362

1. MEASURE PAD LINING THICKNESS

Standard thickness:
10.0 mm (0.394 in.)
Minimum thickness:
1.0 mm (0.039 in.)

Replace the pad if the thickness is less than the minimum or if it shows sign of uneven wear.

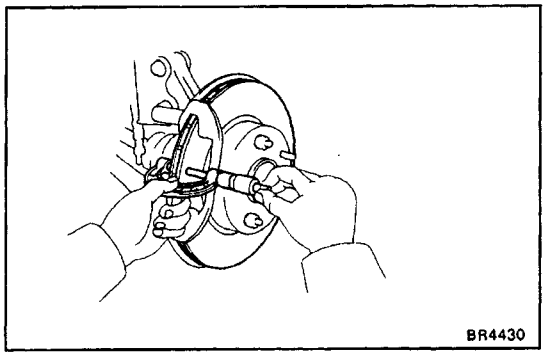
BR4430

2. MEASURE ROTOR DISC THICKNESS

(3S–GTE Engine)
Standard thickness:
22.0 mm (0.866 in.)
Minimum thickness:
21.0 mm (0.827 in.)
(5S–FE Engine)
Standard thickness:
16.0 mm (0.630 in.)
Minimum thickness:
15.0 mm (0.591 in.)

If the disc is scored or worn, or if thickness is less than minimum, repair or replace the disc.

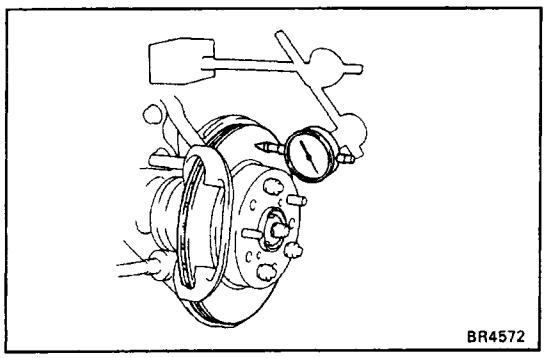
BR4572

3. MEASURE ROTOR DISC RUNOUT

HINT: Before measuring the runout, confirm that the rear hub bearing play is within specification.
Measure the rotor disc runout at 10 mm (0.39 in.) from the outer edge of the rotor disc.

Maximum disc runout:
0.10 mm (0.0039 in.)

If the runout is greater than the maximum, replace the disc.

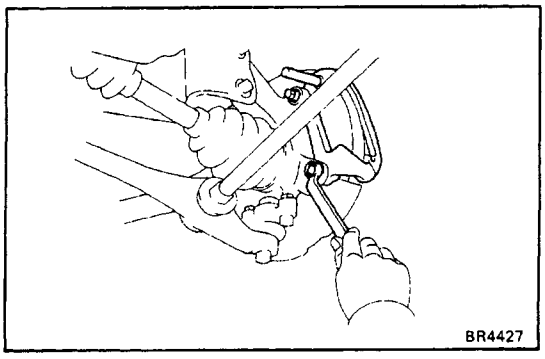
BR4427

4. IF NECESSARY, REPLACE ROTOR DISC

(a) Remove the disc brake cylinder mounting from the dust cover.
(b) Remove the hub nuts and rotor disc.
(e) Install a new rotor disc and temporarily fasten the disc with hub nuts.
(d) Install the torque plate to the rear axle carrier.
Torque: 59 N–m (600 kgf–cm, 43 ft–lbf)

BR06M–01

CYLINDER ASSEMBLY

1. APPLY LITHIUM SOAP BASE GLYCOL GREASE TO PARTS INDICATED BY ARROWS

HINT: Pack the lithium soap base glycol grease into areas marked ”A”.

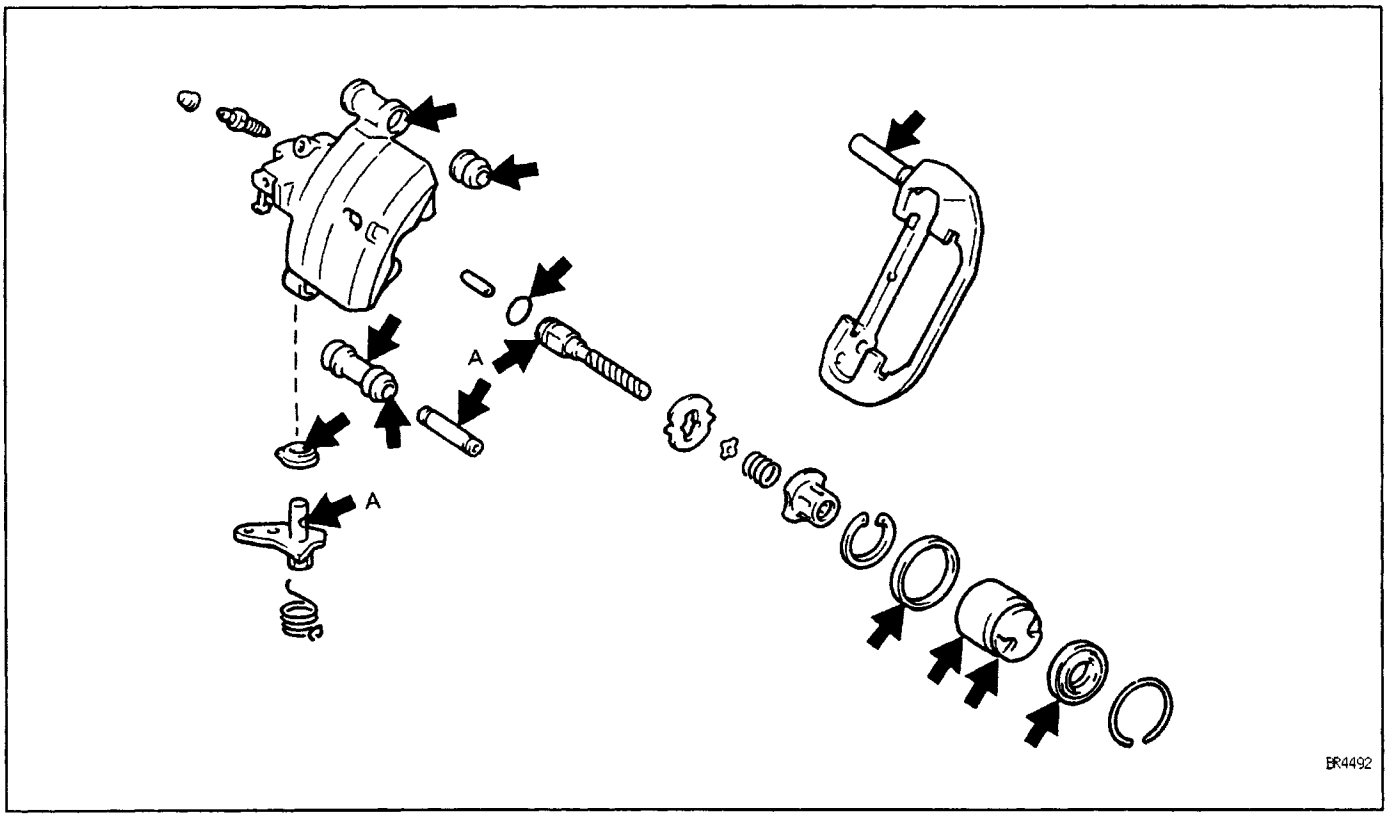

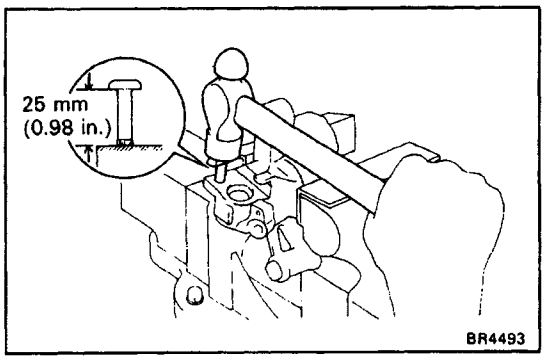

2. INSTALL STOPPER PIN

Tap in the pin to the brake cylinder until the stopper pin extends 25 mm (0.98 in.).

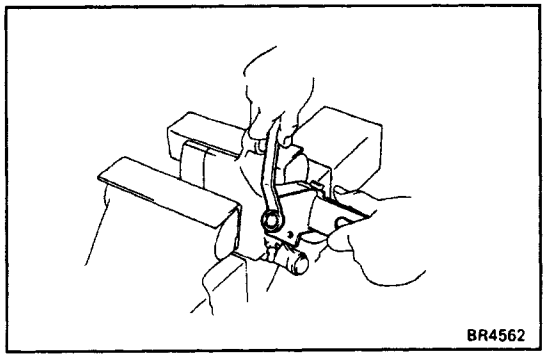

3. INSTALL CABLE SUPPORT BRACKET

Torque: 47 N–m (475 kgf–cm, 34 ft–lbf)

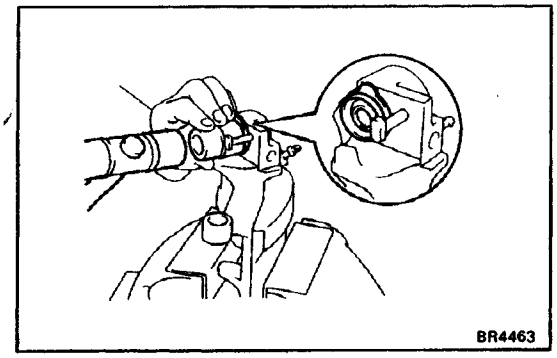

4. INSTALL PARKING BRAKE CRANK BOOT

(a) Using a 24 mm socket wrench and hammer, tap in new parking brake crank boot shown in the figure.

(b) Confirm that the metal plate portion of the parking brake crank boot fits snugly in the cylinder.

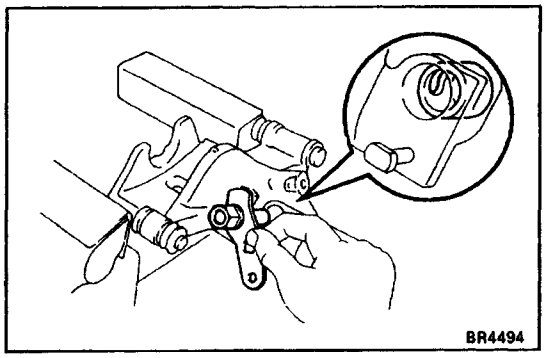

5. INSTALL PARKING BRAKE CRANK

(a) Check that the needle roller bearing is not covering the cylinder hole.

(b) Install the parking brake crank in cylinder.

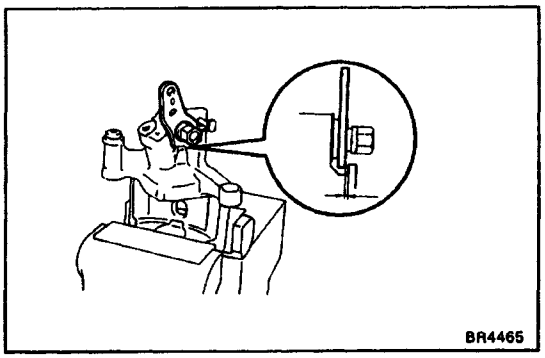

(c) Check that there is clearance between the parking brake crank and cylinder.

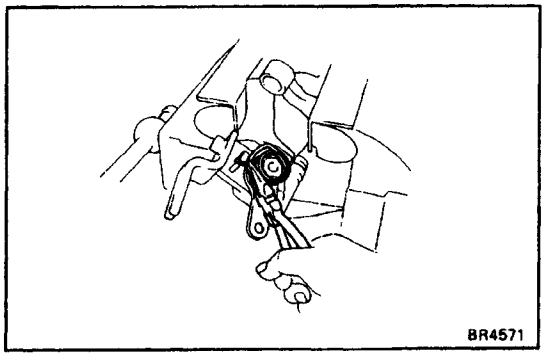

6. INSTALL TORSION SPRING

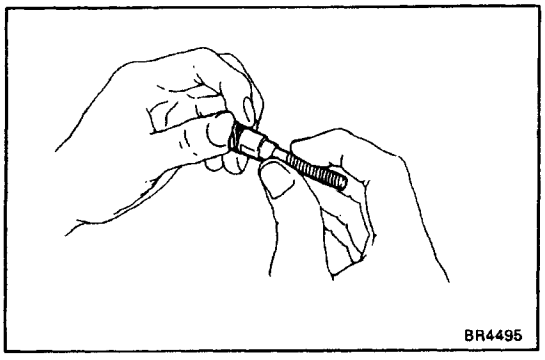

7. INSTALL O–RING TO ADJUSTING BOLT

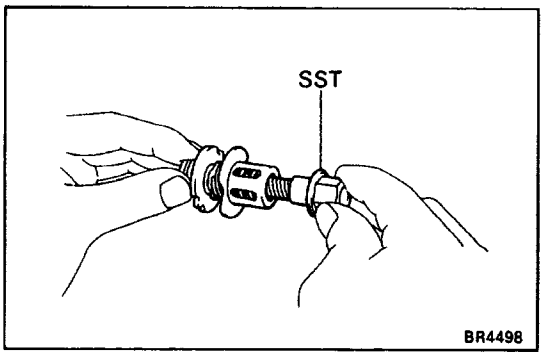

8. INSTALL ADJUSTING BOLT SUB ASSEMBLY

(a) Assemble the parking brake stopper, spring plate, spring, spring retainer and parking brake strut to the. adjusting bolt, and using SST, fully tighten them down by hand.
SST 09756 – 00010

HINT:

- Position the inscribed surface of the stopper upward.
- Align the notches of the spring retainer and sto–pper.

(b) Install the adjusting bolt sub–assembly into the cyl–inder.

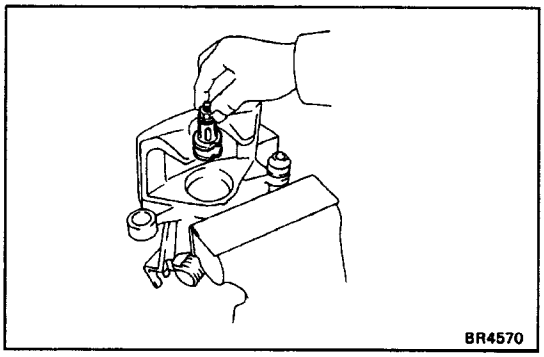

(e) Using snap ring pliers, install the snap ring.

HINT: Face the snap ring opening toward the bleeder side.

(d) Remove the SST.
SST 09756–00010

(e) Firmly pull up the adjusting bolt by hand and insure that it does not move.

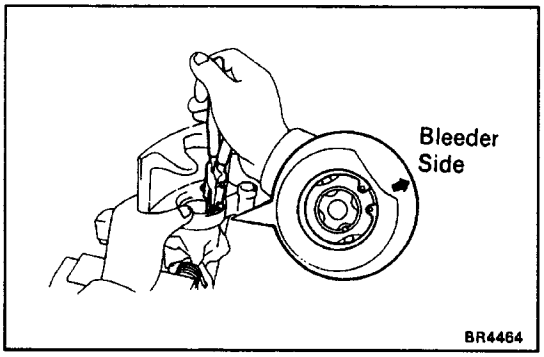

9. OPERATIONAL CHECK

Move the parking brake crank by hand and insure that the adjusting bolt moves smoothly.

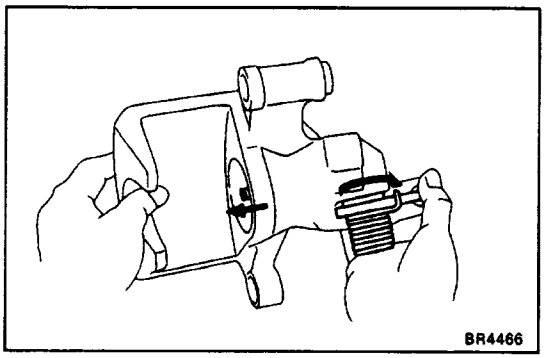

10. INSTALL PISTON SEAL IN CYLINDER

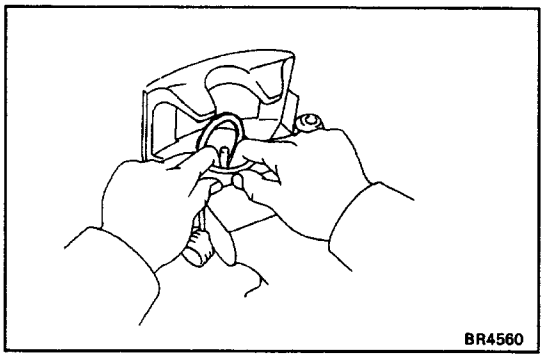

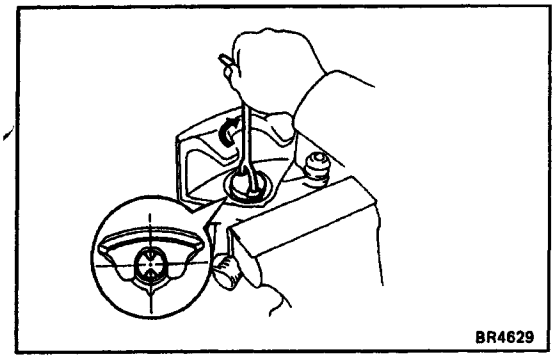

11. INSTALL PISTON IN CYLINDER

Using SST, slowly turn the piston clockwise until the piston turns freely, then align the cylinder protrusion and piston stopper groove.

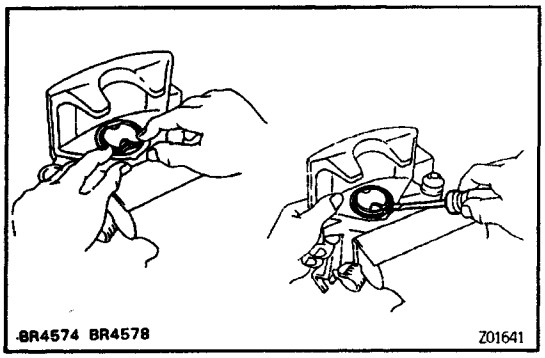

12. INSTALL CYLINDER BOOT AND SET RING IN CYLINDER

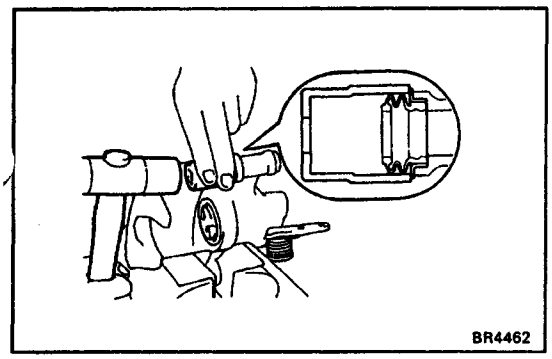

13. INSTALL MAIN PIN BOOT

(a) Using a 19 mm socket wrench and hammer, tap in new main pin boot into the cylinder.

(b) Confirm that the metal plate portion of the main pin boot fits snugly in the cylinder.

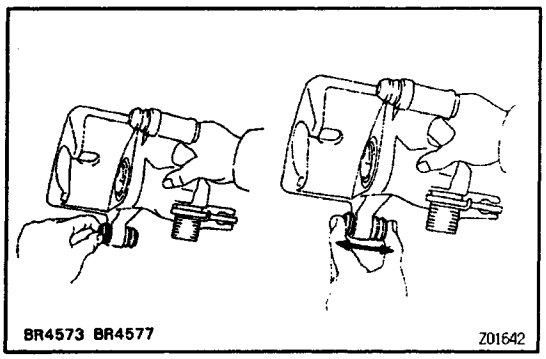

14. INSTALL DUST BOOT AND SLIDING BUSHING

(a) Install the dust boot.

(b) Install the bushing into the boot, with the flange facing inside.

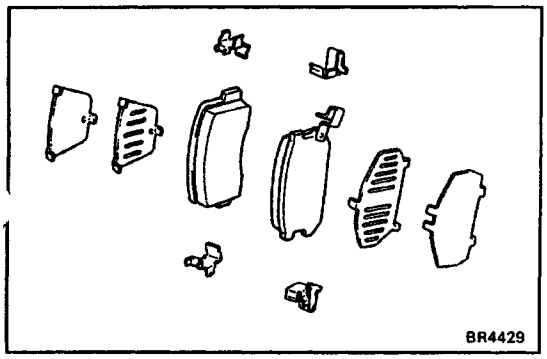

BR06N–01

CYLINDER INSTALLATION

1. INSTALL FOLLOWING PARTS:

(a) Two pad guide plats

(b) Two anti–rattle springs

(c) Four anti–squeal shims

(d) Two brake pads

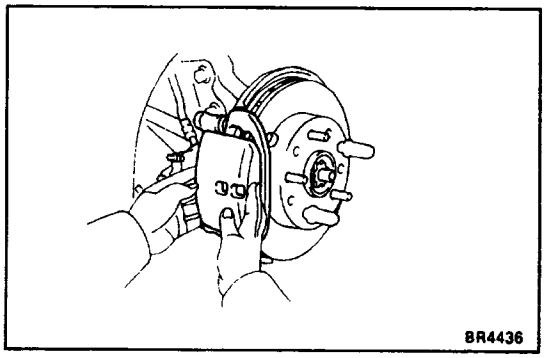

2. INSTALL CYLINDER

(a) Install the cylinder onto the main pin.

HINT: Make sure that the boot end is installed into the groove of the main pin.

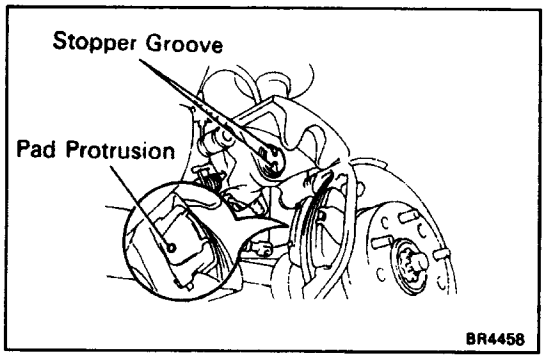

(b) Fit the pad protrusion into the piston stopper groove, and install the cylinder.

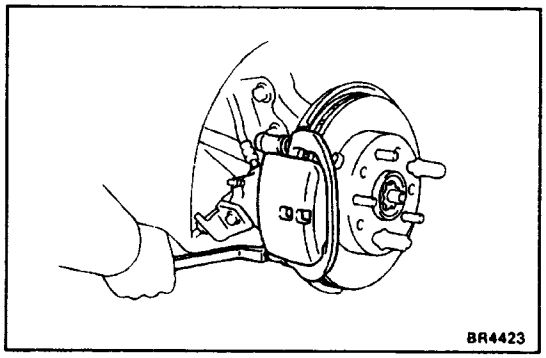

(c) Install the torque the installation bolt.
Torque: 20 N–m (200 kgf–cm, 14 ft–lbf)

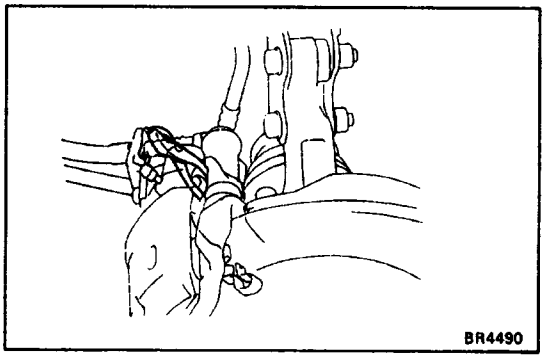

3. CONNECT PARKING BRAKE CABLE

(a) Install the parking brake cable to the cable support bracket and install the retainer.

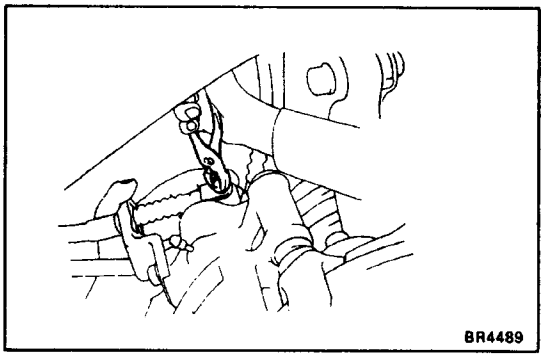

(b) Install the hole pin while pushing the parking brake lever, and install the clip.

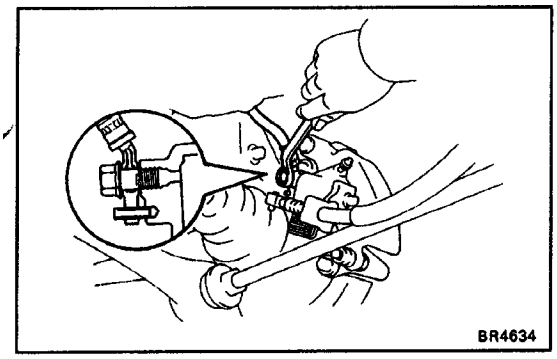

4. CONNECT BRAKE HOSE

Install the flexible hose one the brake cylinder with two new gaskets.

Torque: 30 N–m (310 kgf–cm, 22 ft–lbf)

HINT: Insert the flexible hose lock securely in the lock hole in the brake cylinder.

5. FILL BRAKE RESERVOIR WITH BRAKE FLUID AND BLEED BRAKE SYSTEM

(See page BR–9**)**

6. CHECK FOR FLUID LEAKAGE

7. ADJUST REAR BRAKE

Depress the brake pedal several times and adjust the rear brake automatically.

TROUBLESHOOTING

You will find the troubles easier using the table well shown below. In this table, each number shows the priority of causes in troubles. Check each part in order. If necessary, replace these parts.

See page			BR–18,26,34	BR–18,34	BR–7	BR–11	BR–26,34	BR–10		BR–17	BR–26	BR–18,26,34	BR–18,26,34	BR–18,26,34	BR–18,26,34	BR–7	BR–18,34	BR–18,26,34	BR–18,34	BR–18,34	BR –18, 26, 34	BR–18,26,34	BR–18,34	BR–26
Part Name (Trouble)	Brake system (Fluid leaks)	Brake system (Air in)	Brake pad or lining (Worn)	Piston seal (Worn or damaged)	Brake pedal (Freeplay minimal)	Master cylinder (Faulty)	Rear brake (Shoe clearance out of adjustment)	Parking brake (Lever travel out of adjustment)	Parking brake wire (Sticking)	Booster push rod (Out of adjustment)	Anchor or return spring (Faulty)	Pad or lining (Cracked or distorted)	Piston (Stuck)	Pad or lining (oily)	Piston (Frozen)	Booster system (Vacuum leaks)	Pad support plate (Loose)	Installation bolt (Loose)	Sliding pin (Worn)	Rotor (Scored)	Pad or lining (Dirty)	Pad or lining (Hardened)	Anti–squeal shim (Damaged)	Hold–down spring (Damaged)
Low pedal or spongy pedal	1	2		3		5	4			6														
Brake drag					1	11	4	2	3	9	8	5	6		7	10								
Brake pull												5	1	2	3					4				
Hard pedal but brake inefficient	1	2	3				5			9		4		6		10				8		7		
Noise from brakes											8	1					4	2	5	3	6	7	9	10

V00607

ALTERNATOR

CH016–02

COMPONENTS FOR REMOVAL AND INSTALLATION (3S–GTE)

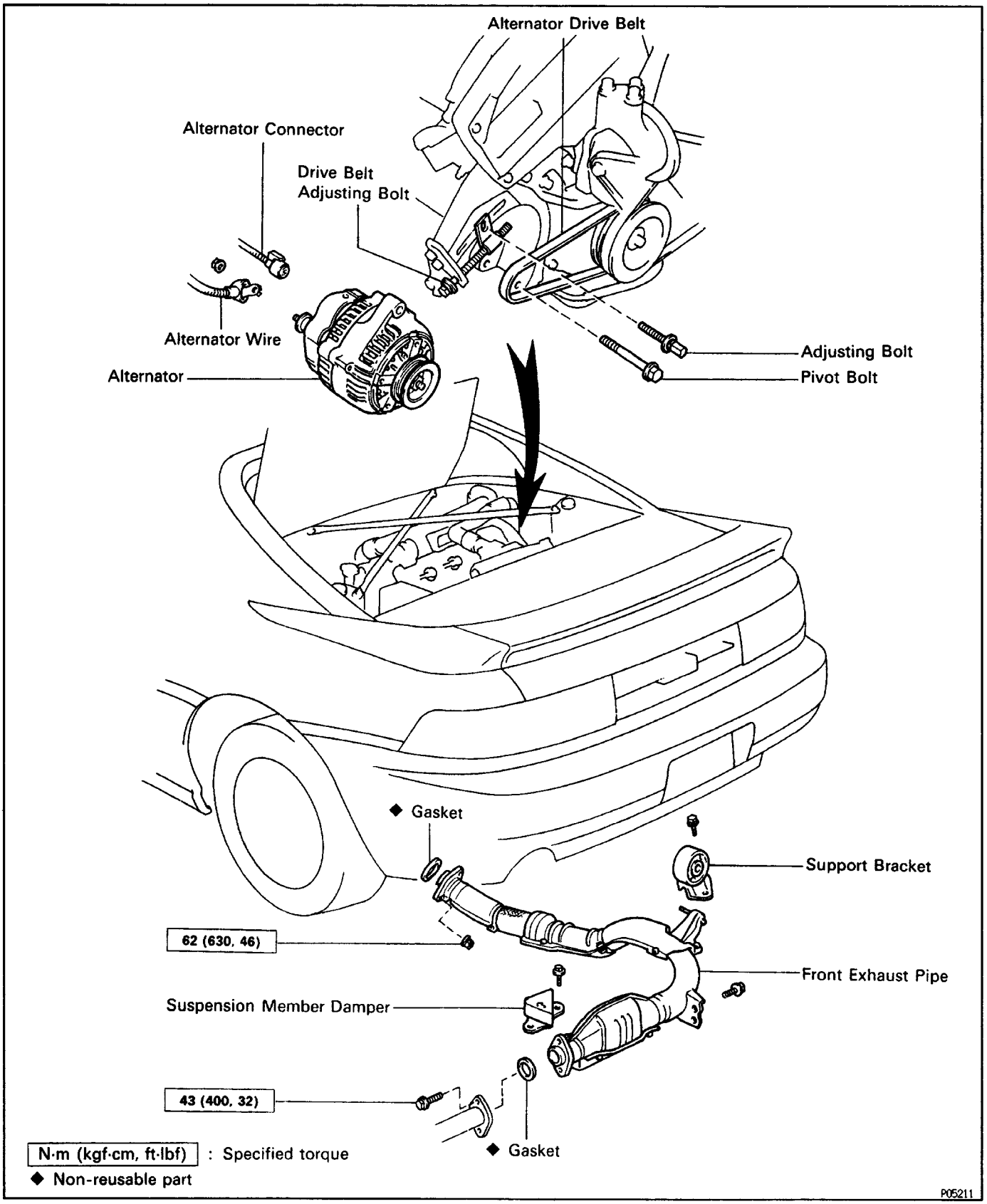

CH02F–01

REMOVAL ALTERNATOR (3S–GTE)

(See Components for Removal and Installation)

1. DISCONNECT CABLE FROM NEGATIVE TERMINAL OF BATTERY

CAUTION: Turn the ignition switch to 'LOCK'. Disconnect the negative terminal from the battery. Wait at least 20 seconds before proceeding with work.

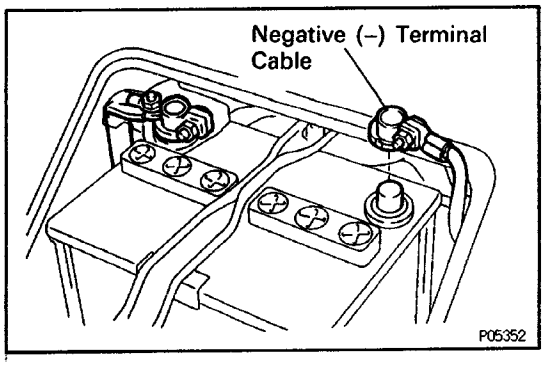

2. REMOVE FRONT EXHAUST PIPE

(a) Remove the two bolts and damper.

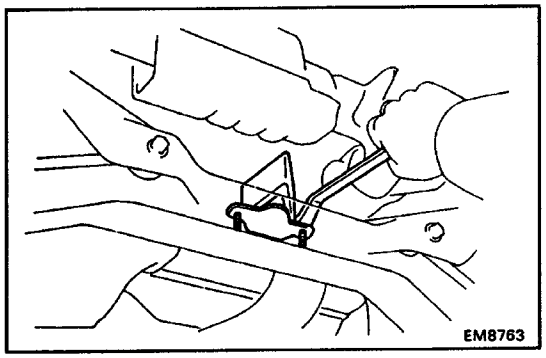

(b) Remove the two bolts and support bracket.

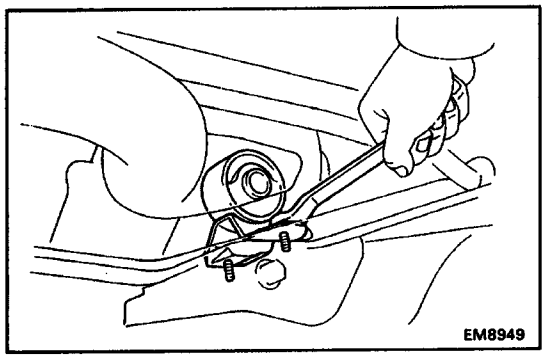

(c) Remove the two bolts holding the front exhaust pipe to the tailpipe bracket.
(d) Remove the two bolts holding the front exhaust pipe to the tailpipe.
(e) Using a 14 mm deep socket wrench, remove the three nuts.
(f) Disconnect the front exhaust pipe from the TWC and tailpipe.
(g) Remove the two gaskets.

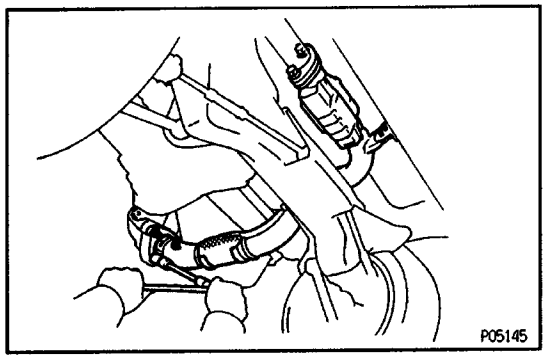

3. REMOVE ALTERNATOR

(a) Disconnect the alternator connector.
(b) Remove the nut, and disconnect the alternator wire.

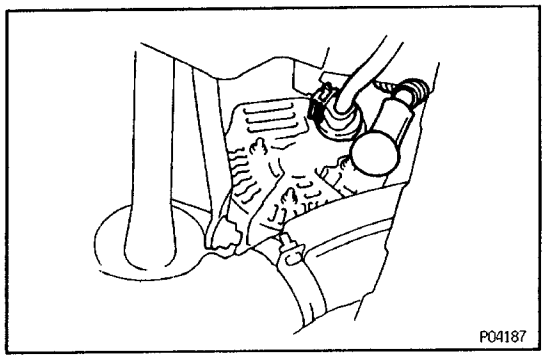

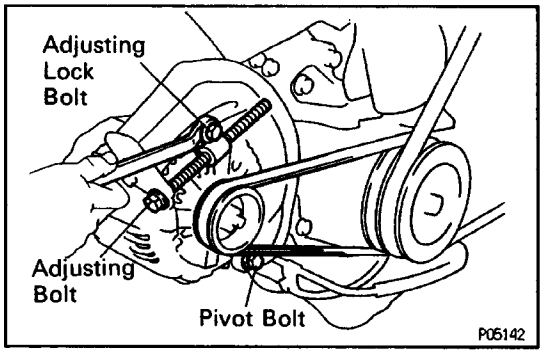

(c) Loosen the pivot bolt and adjusting lock bolt.
(d) Loosen the adjusting bolt, and disconnect the drive belt from the alternator.

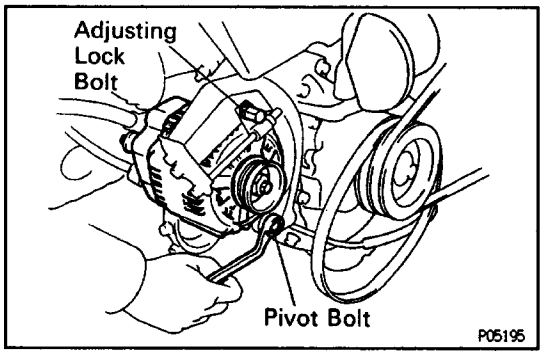

(e) Remove the pivot bolt and adjusting lock bolt, and disconnect the alternator from the bracket.

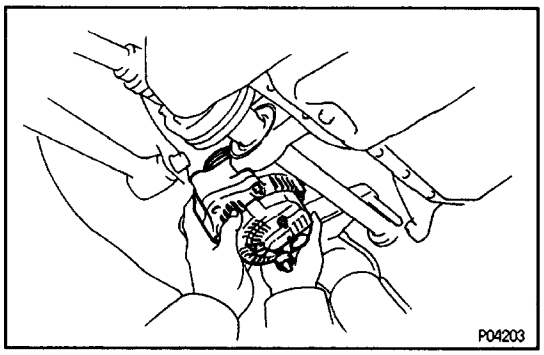

(f) Remove the alternator by passing it between the suspension crossmember and drive shaft.

HINT: Move front exhaust pipe to the left, and remove the alternator.

CH010–03

COMPONENTS FOR REMOVAL AND INSTALLATION (5S–FE)

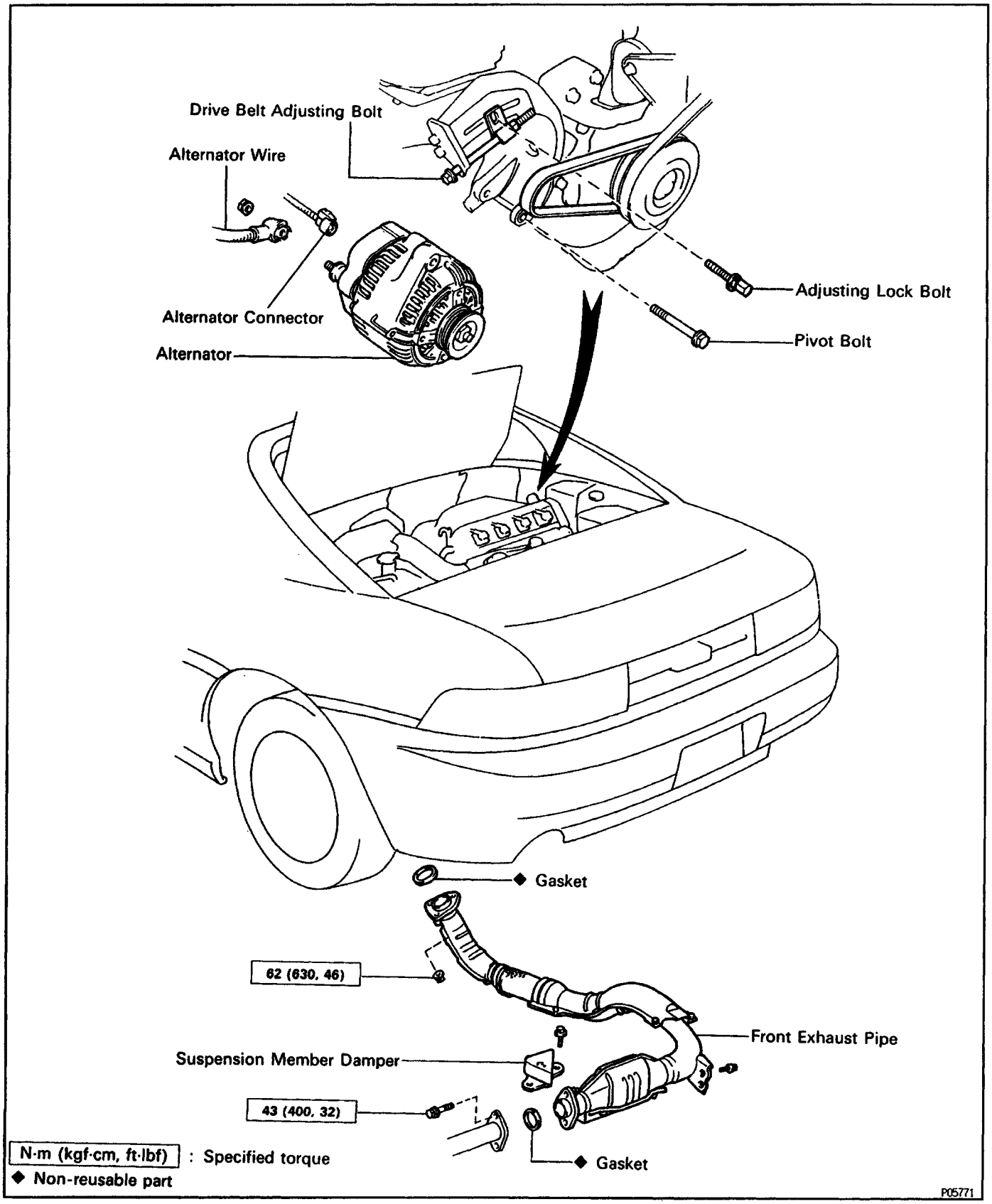

CH02G–01

REMOVAL ALTERNATOR (5S–FE)

(See Components for Removal and Installation)

1. DISCONNECT CABLE FROM NEGATIVE TERMINAL OF BATTERY

CAUTION: Turn the ignition switch to "LOCK". Disconnect the negative terminal from the battery. Wait at least 20 seconds before proceeding with work.

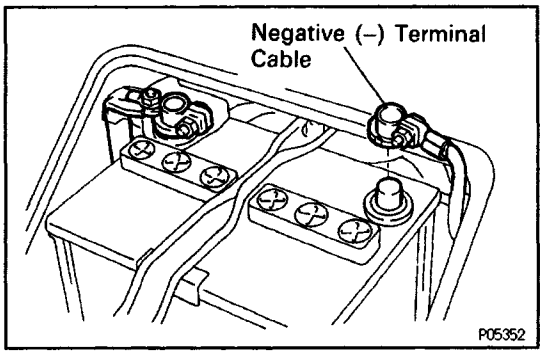

2. REMOVE EXHAUST PIPE

(a) (CALIF. only)
Remove the two bolts and damper.

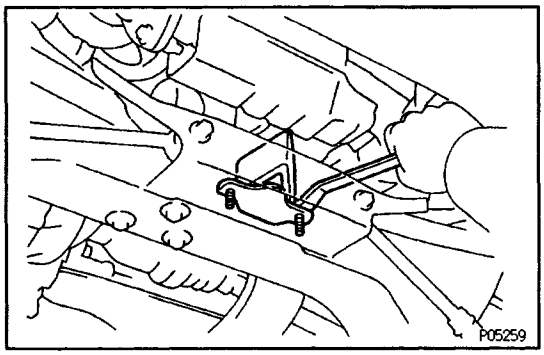

(b) Remove the two bolts holding the front exhaust pipe bracket to the tailpipe bracket.
(c) Remove the two bolts holding the front exhaust pipe to the tailpipe.
(d) Using a 14 mm deep socket wrench, remove the three nuts holding the front exhaust pipe to the TWC.
(e) Remove the front exhaust pipe.
(f) Remove the two gaskets.

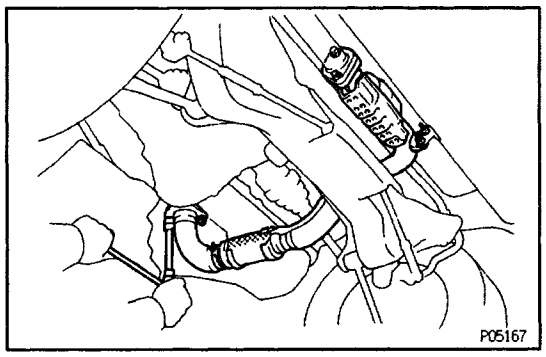

3. REMOVE ALTERNATOR

(a) Disconnect the alternator connector.
(b) Remove the nut, and disconnect the alternator wire.

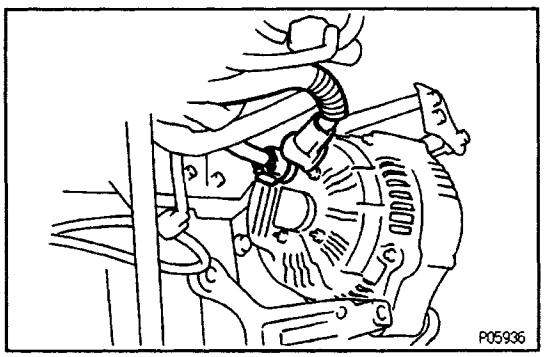

(c) Loosen the pivot bolt and adjusting lock bolt.
(d) Loosen the adjusting bolt, and disconnect the drive belt from the alternator.

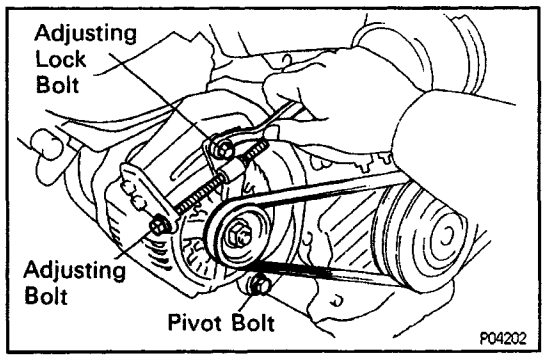

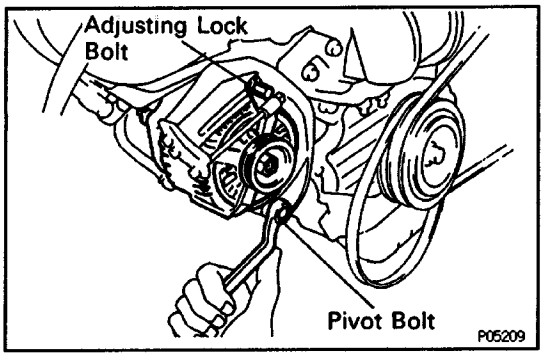

(e) Remove the pivot bolt and adjusting lock nut, and disconnect the alternator from the bracket.

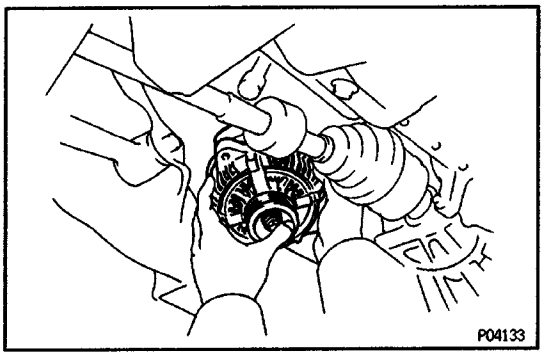

(f) Remove the alternator by passing it between the suspension crossmember and drive shaft.

NOTICE: Be careful not to damage the drive shaft boot.

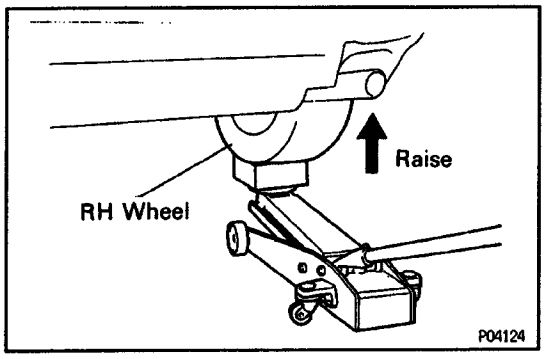

HINT: (80 A or 90 A Type Alternator): Using a jack, raise the RH wheel as far as it will go.

COMPONENTS FOR DISASSEMBLY AND ASSEMBLY

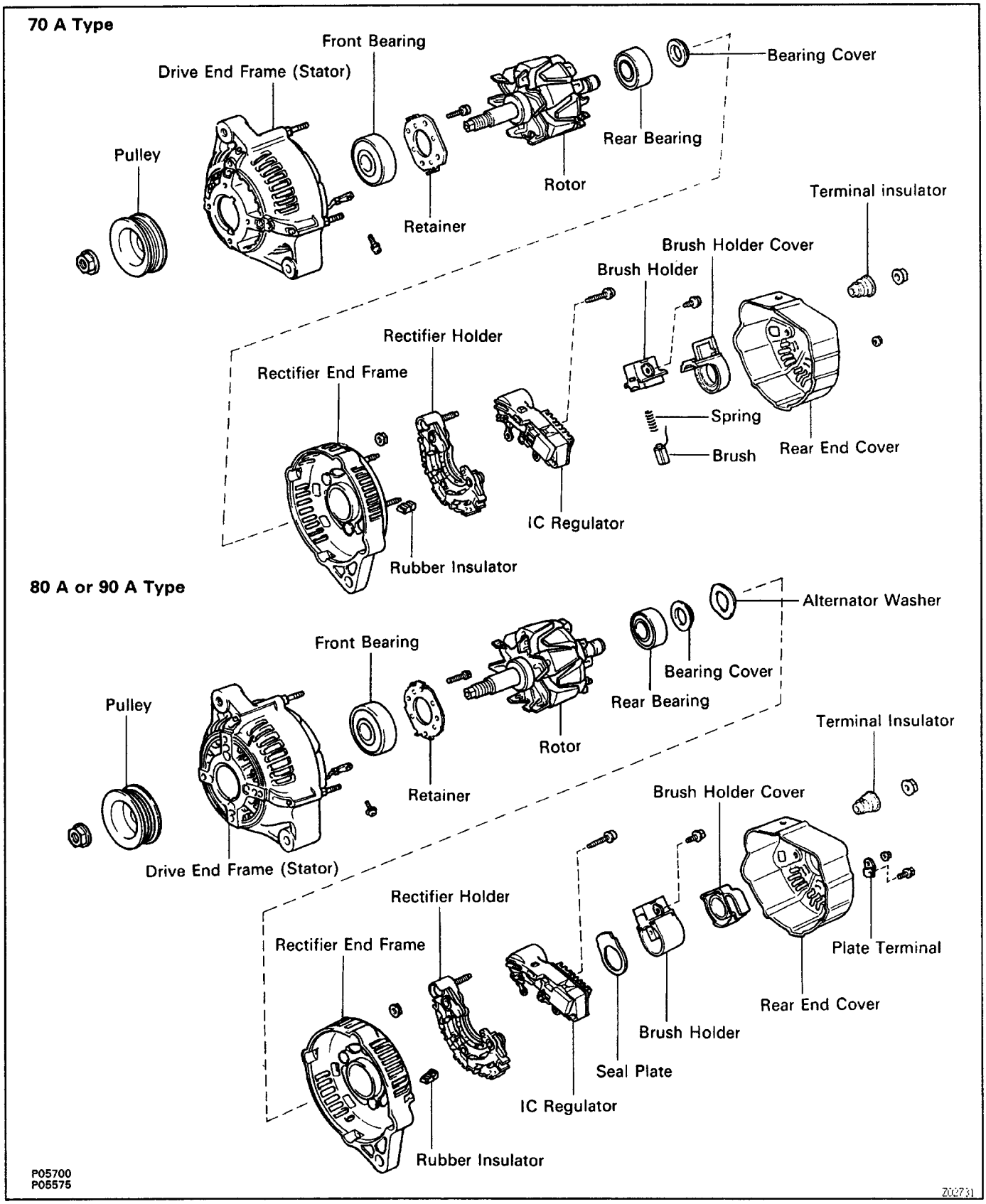

CH02H–01

ALTERNATOR DISASSEMBLY

(See Components for Disassembly and Assembly)

1. REMOVE REAR END COVER

(a) Remove the nut and terminal insulator.

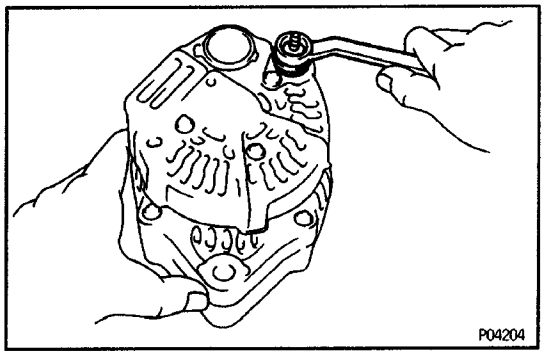

(b) (70 A Type)
Remove the three nuts and end cover.

(c) (80 A or 90 A Type)
Remove the bolt, three nuts, plate terminal and end cover.

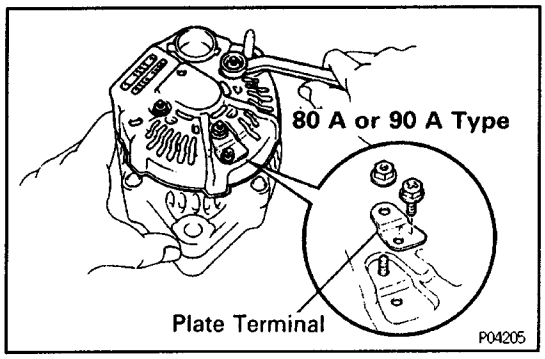

2. REMOVE BRUSH HOLDER AND IC REGULATOR

(a) (80 A or 90 A Type)
Remove the brush holder cover from the brush holder.

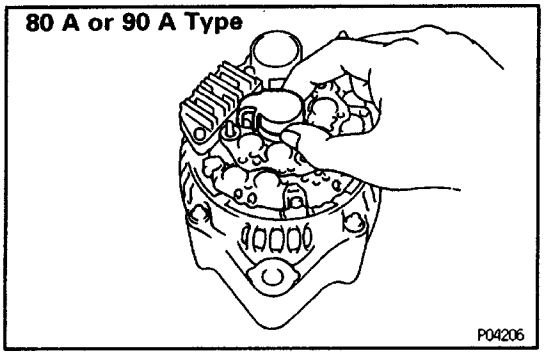

(b) Remove the five screws, brush holder and IC regulator.

(c) (70 A Type)
Remove the brush holder cover from the brush holder.

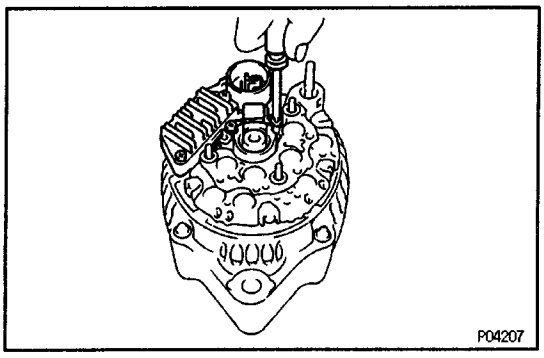

(d) (80 A or 90 A Type)
Remove the seal plate.

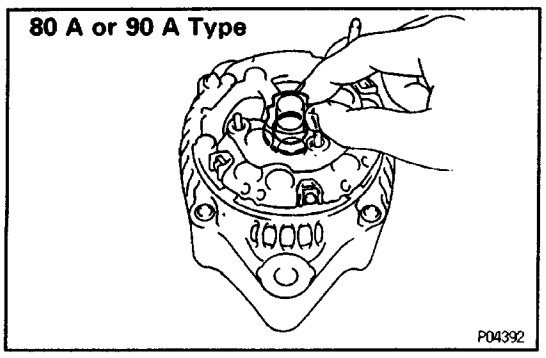

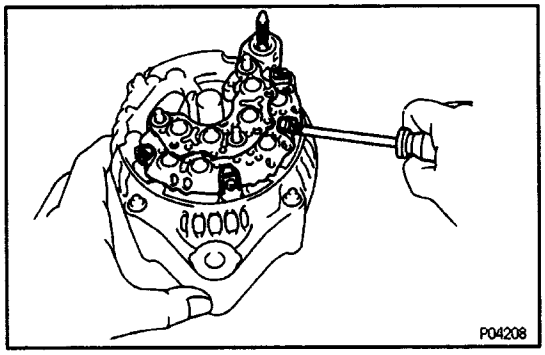

3. REMOVE RECTIFIER HOLDER

(a) Remove the four screws and rectifier holder.

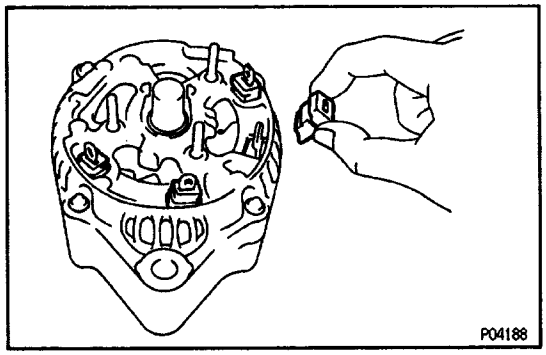

(b) Remove the four rubber insulators.

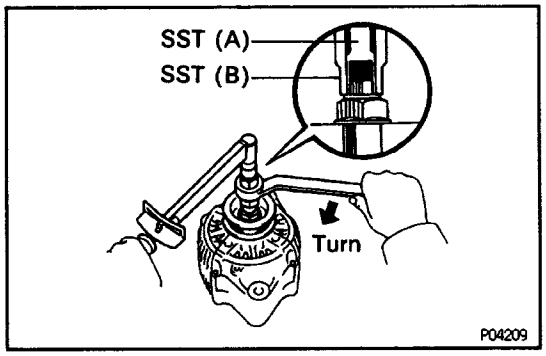

4. REMOVE PULLEY

(a) Hold SST (A) with a torque wrench, and tighten SST (B) clockwise to the specified torque.

SST 09820–63010

Torque: 39 N–m (400 kgf–cm, 29 ft–lbf)

(b) Check that SST (A) is secured to the rotor shaft.

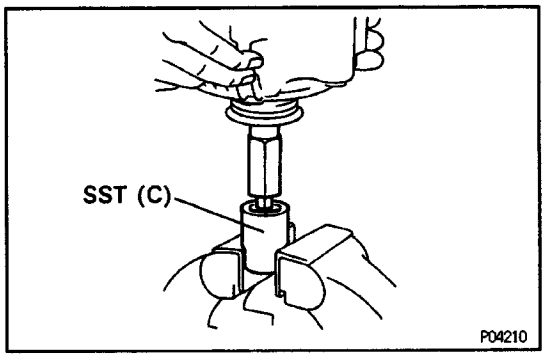

(c) Mount SST (C) in a vise.

(d) Install the pulley nut to SST (C).

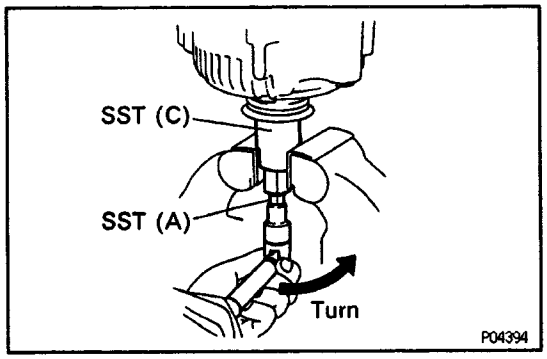

(e) To loosen the pulley nut, turn SST (A) in the direction shown in the illustration.

NOTICE: To prevent damage to the rotor shaft, do no1 loosen the pulley nut more than one–half of a turn.

(f) Remove the alternator from SST (C).

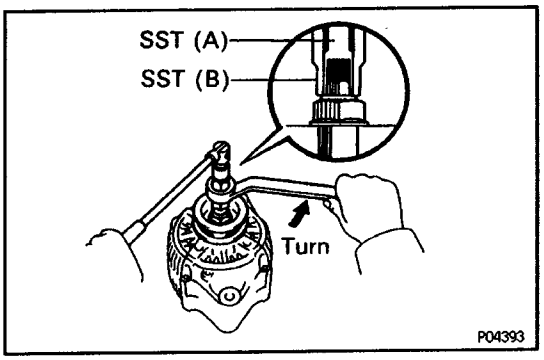

(g) Turn SST (B), and remove SST (A and B).
(h) Remove the pulley nut and pulley.

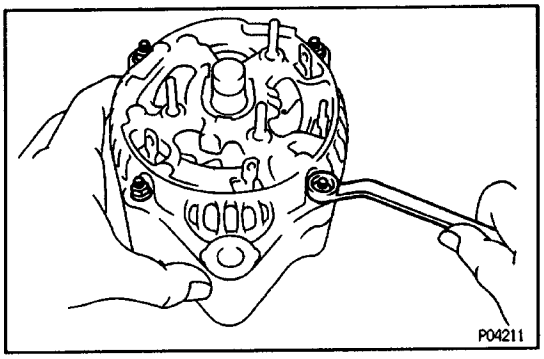

5. REMOVE RECTIFIER END FRAME

(a) Remove the four nuts.

(b) Using SST, remove the rectifier end frame.
SST 09286–46011

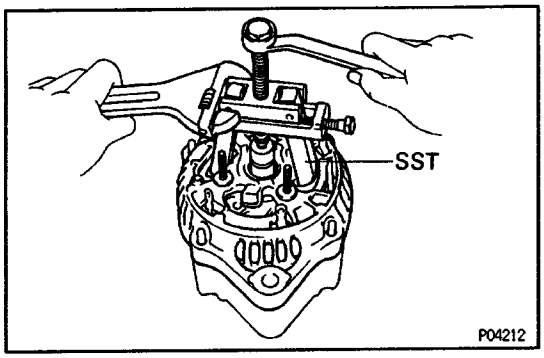

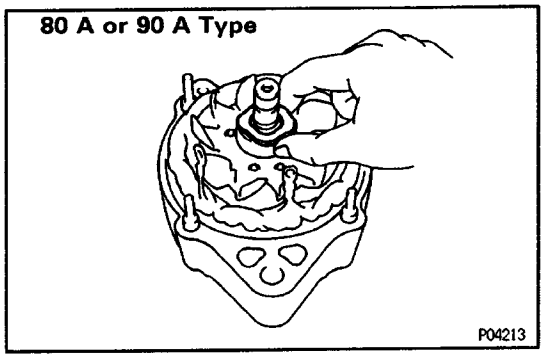

(c) (80 A or 90 A Type)
Remove the alternator washer.

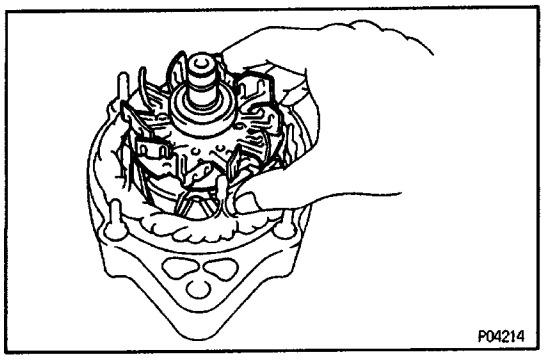

6. REMOVE ROTOR FROM DRIVE END FRAME

ALTERNATOR INSPECTION AND REPAIR

Rotor

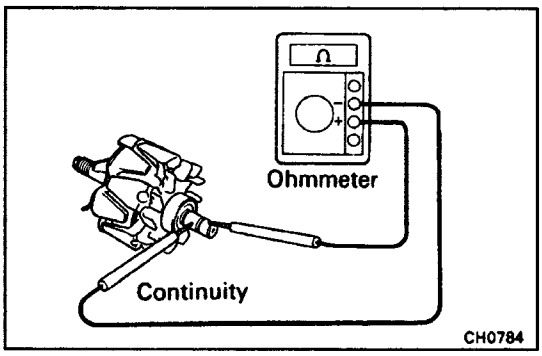

1. INSPECT ROTOR FOR OPEN CIRCUIT

Using an ohmmeter, check that there is continuity between the slip rings.

Standard resistance (Cold): 2.8–3–00

If there is no continuity, replace the rotor.

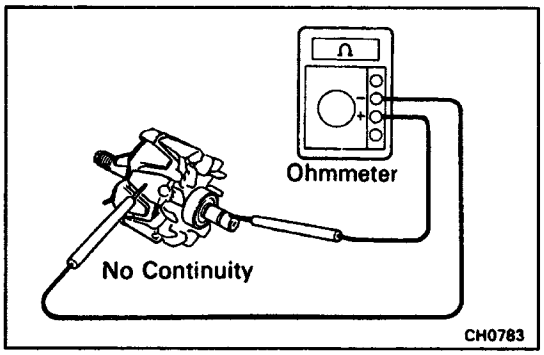

2. INSPECT ROTOR FOR GROUND

Using an ohmmeter, check that there is no continuity between the slip ring and rotor.

If there is continuity, replace the rotor.

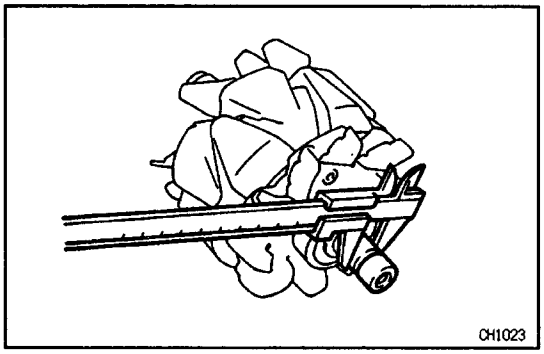

3. INSPECT SLIP RINGS

(a) Check that the slip rings are not rough or scored.
If rough or scored, replace the rotor.

(b) Using a vernier caliper, measure the slip ring diameter.

Standard diameter:
14.2 – 14.4 mm (0.559 – 0.567 in.)

Minimum diameter:
12.8 mm (0.504 in.)

If the diameter is less than minimum, replace the rotor.

Stator (Drive End Frame)

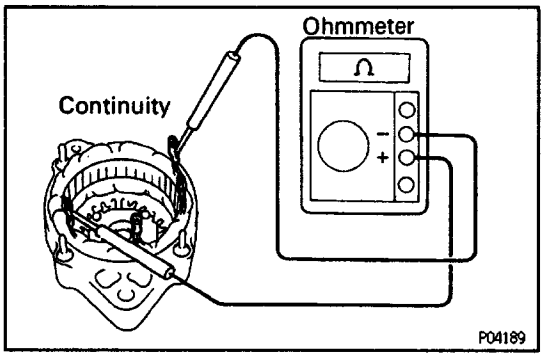

1. INSPECT STATOR FOR OPEN CIRCUIT

Using an ohmmeter, check that there is continuity between the coil leads.

If there is no continuity, replace the drive end frame assembly.

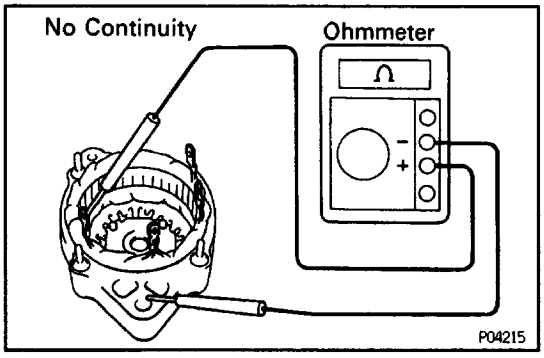

2. INSPECT STATOR FOR GROUND

Using an ohmmeter, check that there is no continuity between the coil lead and drive end frame.

If there is continuity, replace the drive end frame assembly.

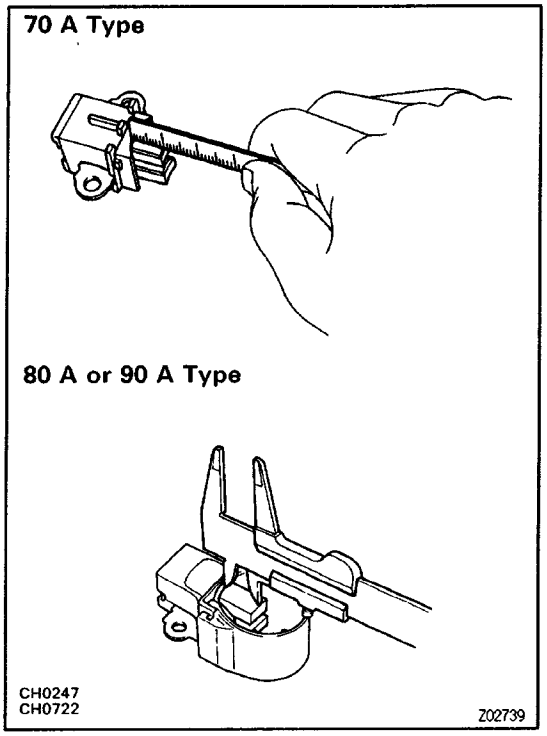

Brushes

1. INSPECT EXPOSED BRUSH LENGTH

Using a scale, measure the exposed brush length.

Standard exposed length:

10.5 mm (0.413 in.)

Minimum exposed length:

1.5 mm (0.059 in.)

If the exposed length is less than minimum, replace the brushes (70 A type) or brush holder assembly (80 A or 90 A type).

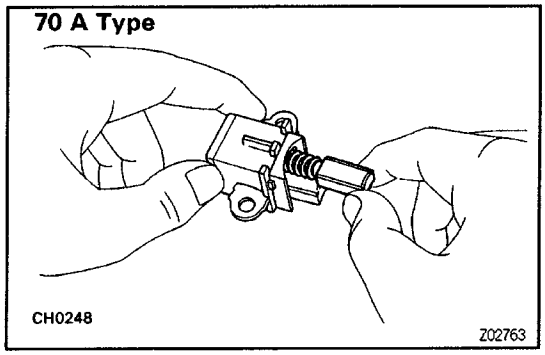

2. IF NECESSARY, REPLACE BRUSHES

(a) Unsolder and remove the brush and spring.

(b) Run the wire of a new brush through the spring and the hole in the brush holder, and insert the spring and brush into the brush holder.

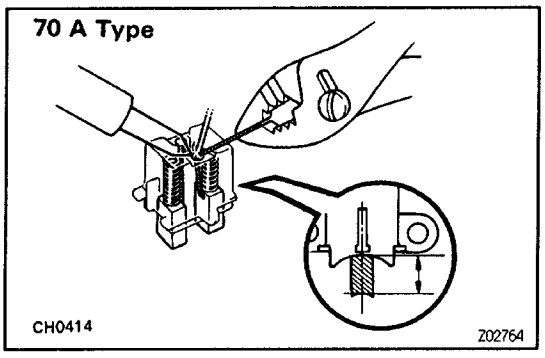

(c) Solder the brush wire to the brush holder at specified exposed length.

Exposed length:

10.5 mm (0.413 in.)

(d) Check that the brush moves smoothly in the brush holder.

(e) Cut off the excess wire.

(f) Apply insulation paint to the soldered area.

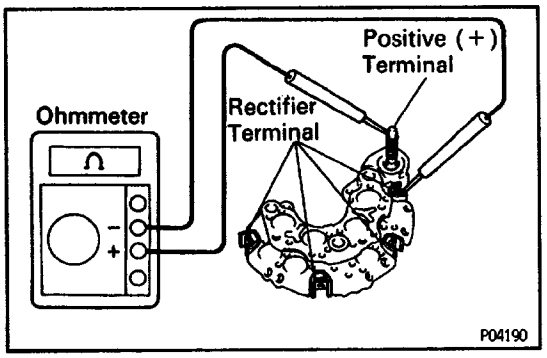

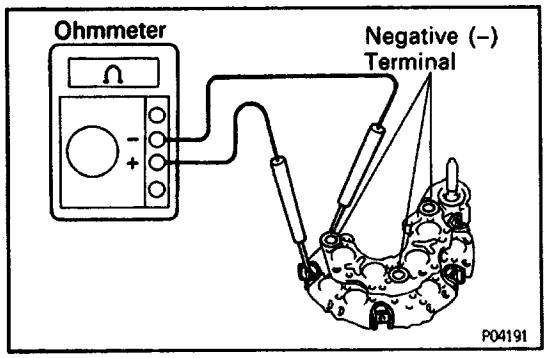

Rectifiers (Rectifier Holder)

1. INSPECT POSITIVE RECTIFIER

(a) Using an ohmmeter, connect one tester probe to the positive (+) terminal and the other to each rectifier terminal.

(b) Reverse the polarity of the tester probes and repeat step (a).

(c) Check that one shows continuity and the other shows no continuity.

If continuity is not as specified, replace the rectifier holder.

2. INSPECT NEGATIVE RECTIFIER

(a) Using an ohmmeter, connect one tester probe to each negative (–) terminal and the other to each rectifier terminal.

(b) Reverse the polarity of the tester probes and repeat step (a).

(c) Check that one shows continuity and the other shows no continuity.

If continuity is not as specified, replace the rectifier holder.

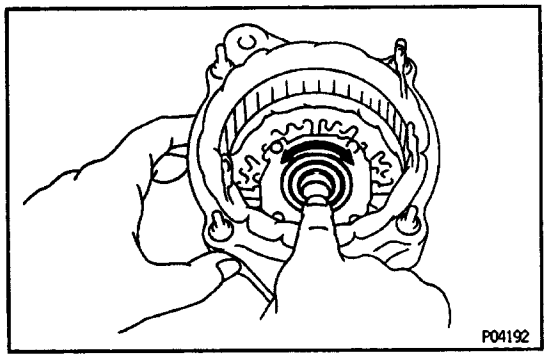

Bearings

1. INSPECT FRONT BEARING

Check that the bearing is not rough or worn.

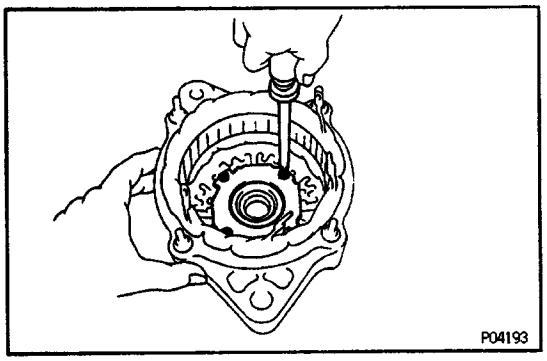

2. IF NECESSARY, REPLACE FRONT BEARING

(a) Remove the four screws, bearing retainer and bearing

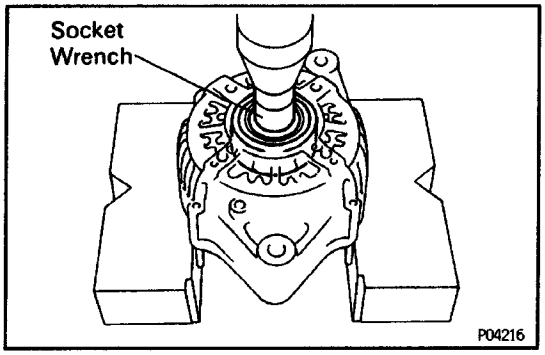

(b) Using a socket wrench and press, press out the bea–ring.

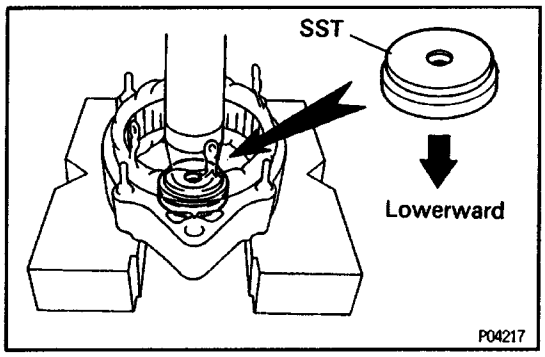

(c) Using SST and a press, press in a new bearing.
SST 09608–20012 (09608–00030)

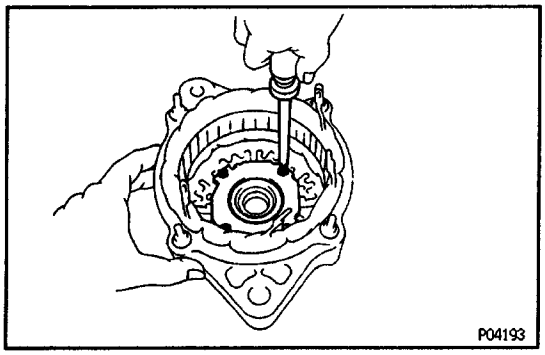

(d) Install the bearing retainer with the four screws.

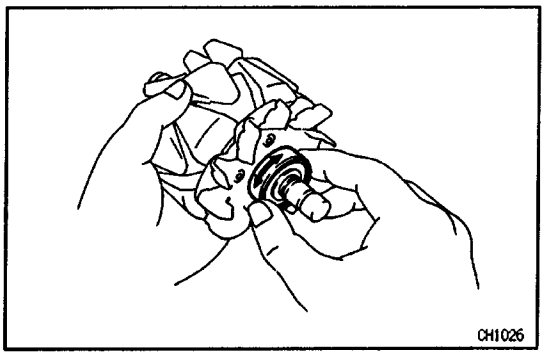

3. INSPECT REAR BEARING

Check that the bearing is not rough or worn.

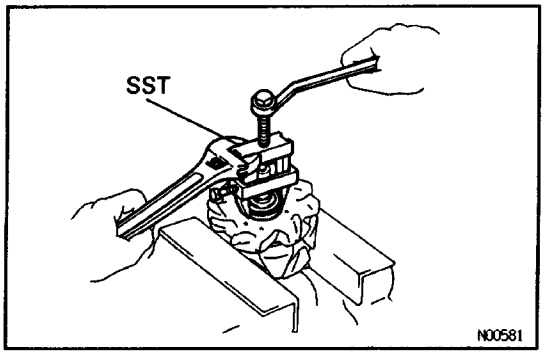

4. IF NECESSARY, REPLACE REAR BEARING

(a) Using SST, remove the bearing cover and bearing.
SST 09820–00021

NOTICE: Be careful not to damage the fan.

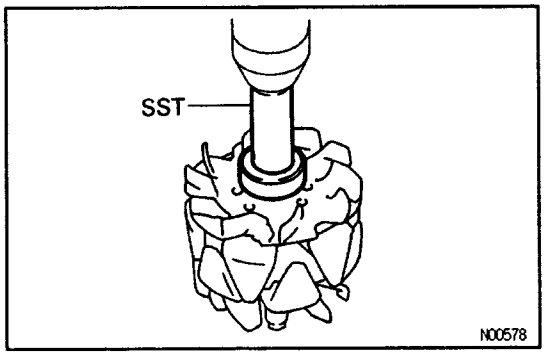

(b) Using SST and a press, press in a new bearing.
SST 09820–00030

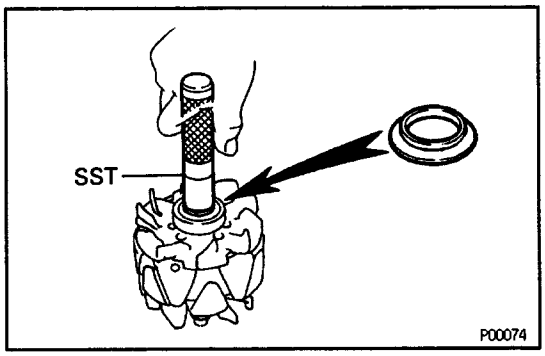

(c) Using SST, push in the bearing cover.
SST 09285–76010

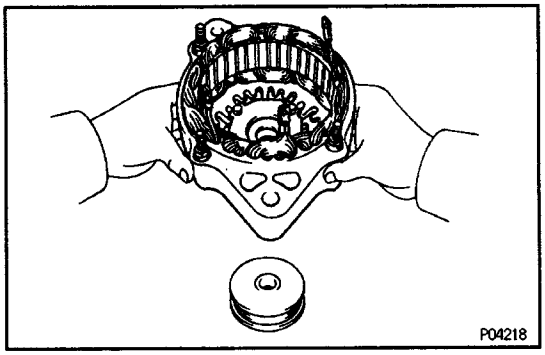

CH02J–0

ALTERNATOR ASSEMBLY

(See Components for Disassembly and Assembly)

1. PLACE RECTIFIER END FRAME ON PULLEY

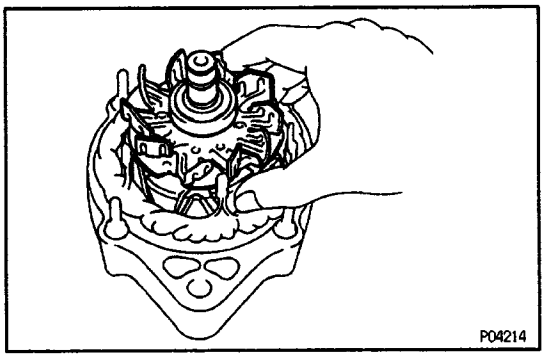

2. INSTALL ROTOR TO DRIVE END FRAME

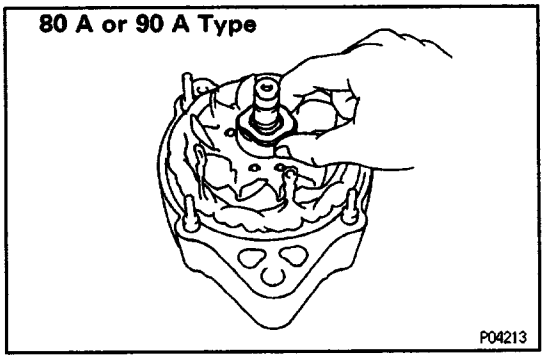

3. INSTALL RECTIFIER END FRAME

(a) (80 A or 90 A Type)
Place the thrust washer on the rotor.

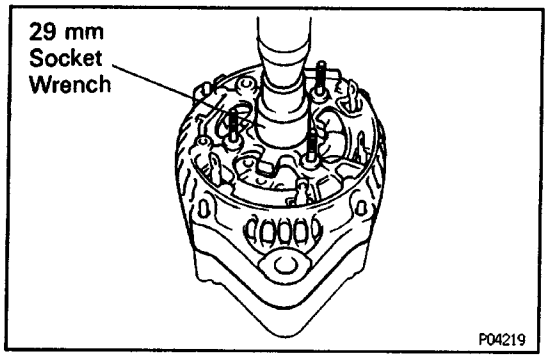

(b) Using a 29 mm socket wrench and press, slowly press in the rectifier end frame.

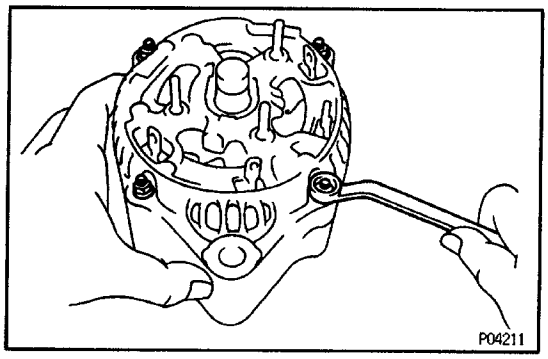

(c) Install the four nuts.

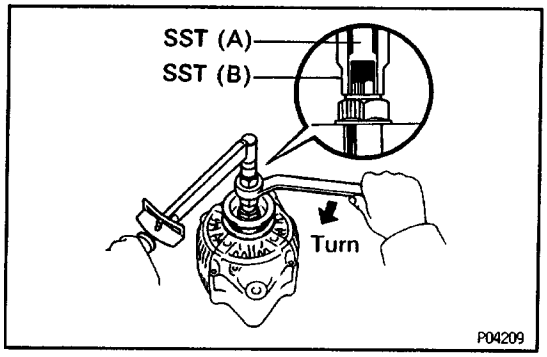

4. INSTALL PULLEY

(a) Install the pulley to the rotor shaft by tightening the pulley nut by hand.

(b) Hold SST (A) with a torque wrench, and tighten SST (B) clockwise to the specified torque.

SST 09820–63010

Torque: 39 N–m (400 kgf–cm, 29 ft–lbf)

(c) Check that SST (A) is secured to the pulley shaft.

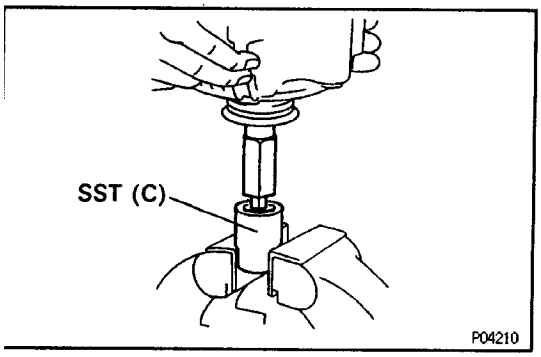

(d) Mount SST (C) in a vise.

(e) Install the pulley nut to SST (C).

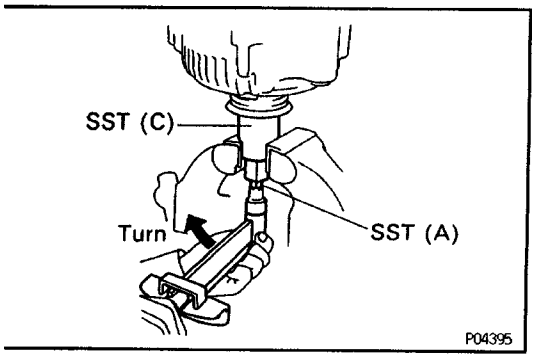

(f) To torque the pulley nut turn SST (A) in the direction shown in the illustration.

Torque: 110 N–m (1,125 kgf–cm, 81 ft–lbf)

(g) Remove the alternator from SST (C).

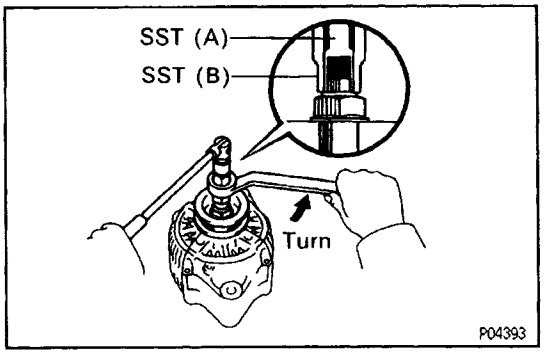

(h) Turn SST (B) and remove SST (A and B).

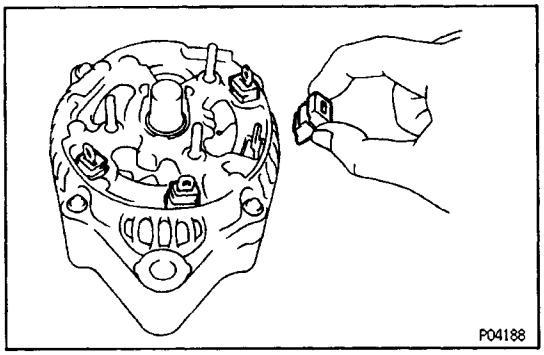

5. INSTALL RECTIFIER HOLDER

(a) Install the four rubber insulators on the lead wires.

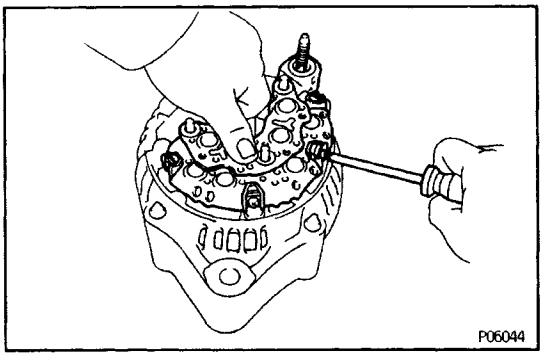

(b) Install the rectifier holder while pushing it with the four screws.

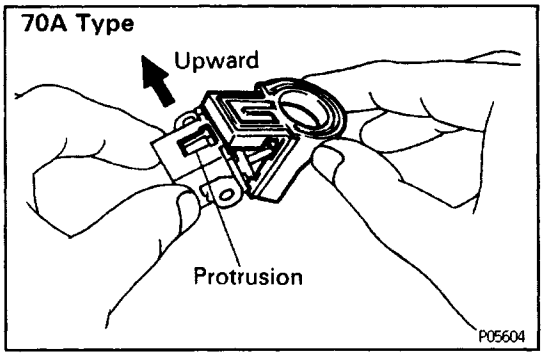

6. INSTALL IC REGULATOR AND BRUSH HOLDER (70 A Type)

(a) Install the brush holder cover to the brush holder.

NOTICE: Be careful of the holder installation direction.

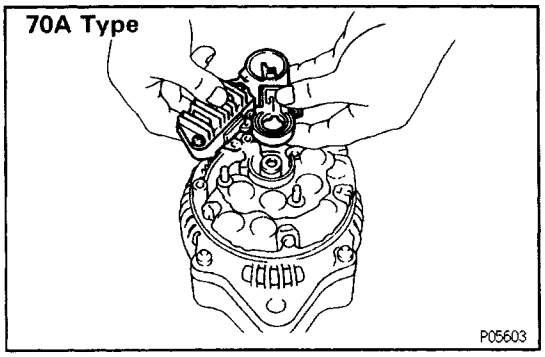

(b) Place the IC regulator together with the brush holder horizontally on the rectifier end frame.

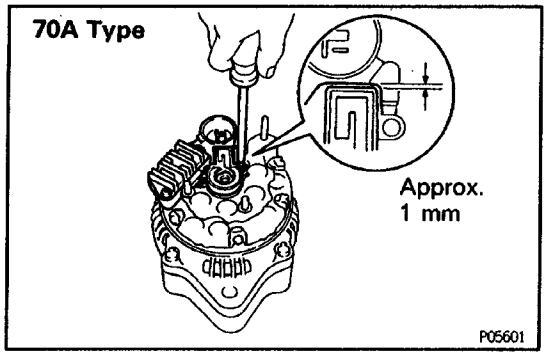

(c) Install the five screws until there is a clearance of approx. 1 mm (0.04 in.) between the brush holder and connector.

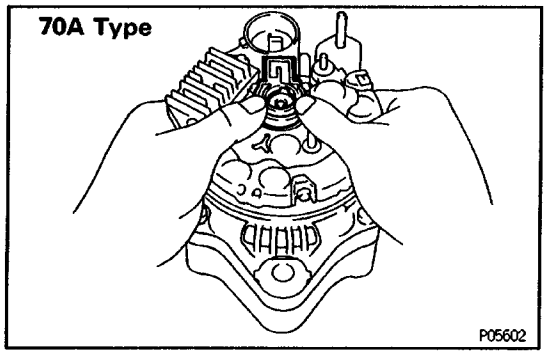

(d) Fit the brush holder cover.

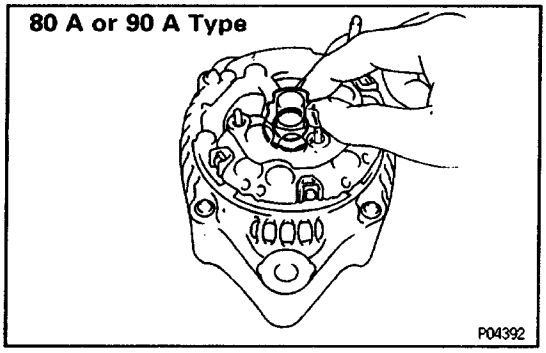

(80 A or 90 A Type)

(a) Place the seal plate on the rectifier end frame.

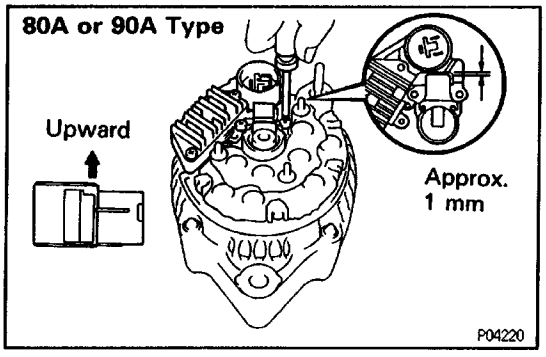

(b) Place the IC regulator and brush holder on the rectifier end frame.

NOTICE: Be careful of the holder installation direction.

(c) Install the five screws until there is a clearance of approx. 1 mm (0.04 in.) between the brush holder and connector.

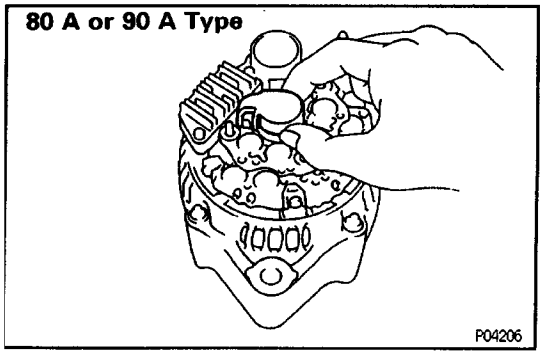

(d) Place the brush holder cover on the brush holder.

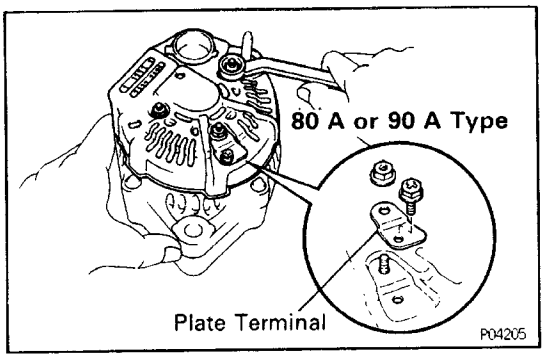

7. INSTALL REAR END COVER

(a) (70 A Type)
Install the end cover with the three nuts.
(b) (80 A or 90 A Type)
Install the end cover and plate terminal with the three nuts and bolt.

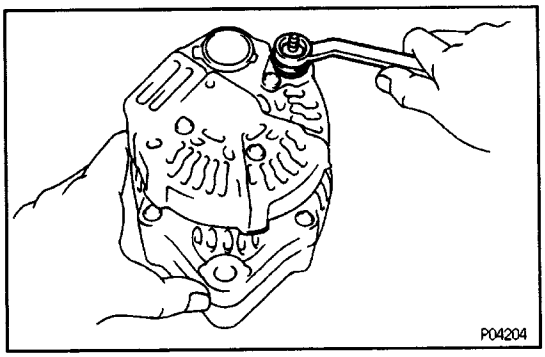

(c) Install the terminal insulator with the nut.

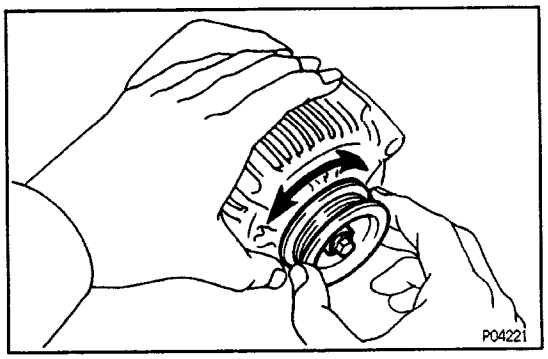

8. CHECK THAT ROTOR ROTATES SMOOTHLY

ALTERNATOR INSTALLATION (3S–GTE)

(See Components for Removal and Installation)

1. INSTALL ALTERNATOR

(a) Pass the alternator between the suspension cross member and drive shaft.

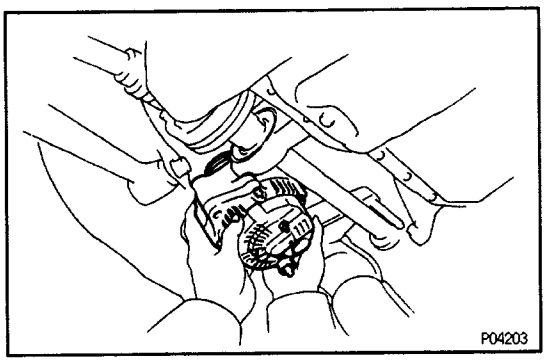

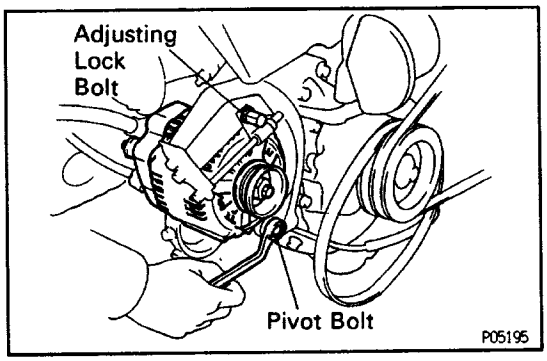

(b) Mount the alternator on the alternator bracket with the pivot bolt and adjusting lock bolt. Do not tighten the bolts yet.

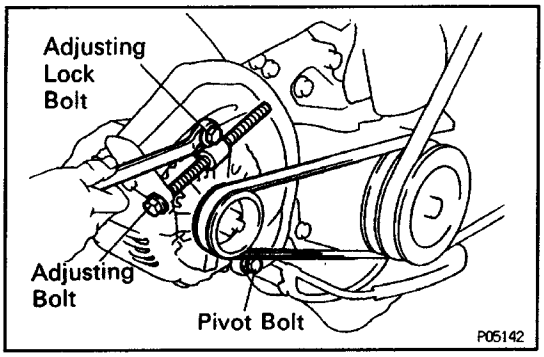

(c) Install the drive belt with the adjusting bolt.
(d) Adjust the drive belt with the adjusting bolt.
(See steps 5 to 7 in On–Vehicle Inspection)
(e) Tighten the Adjusting lock bolt and pivot bolt.

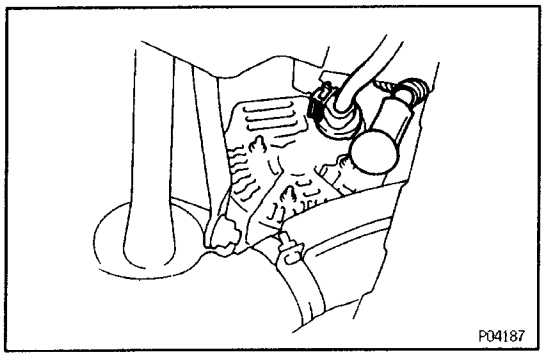

(f) Connect the alternator connector.
(g) Connect the alternator wire with the nut.

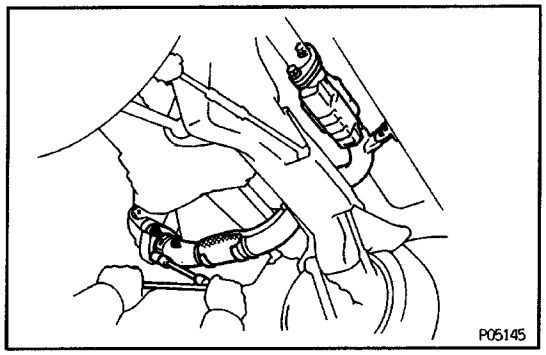

2. INSTALL FRONT EXHAUST PIPE

(a) Place two new gaskets to the front and rear of the front exhaust pipe.
(b) Using a 14 mm deep socket wrench, install the front exhaust pipe with three new nuts.
Torque: 62 N–m (630 kgf–cm. 46 ft–lbf)
(c) Install the two bolts holding the front exhaust pipe to the tailpipe.
Torque: 43 N–m (440 kgf–cm, 32 ft–lbf)
(d) Install the two bolts holding the front exhaust pipe bracket to the tailpipe bracket.
Torque: 19 N–m (190 kgf–cm, 14 ft–lbf)

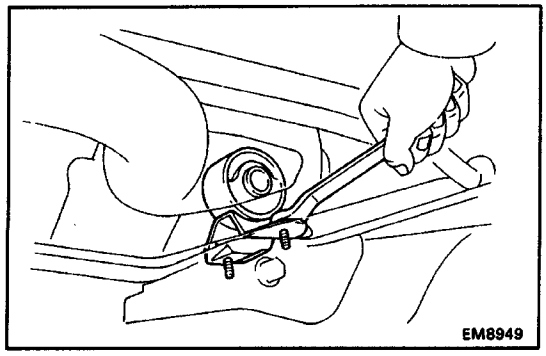

(e) Install the support bracket with the two bolts.
Torque: 21 N–m (210 kgf–cm, 15 ft–lbf)

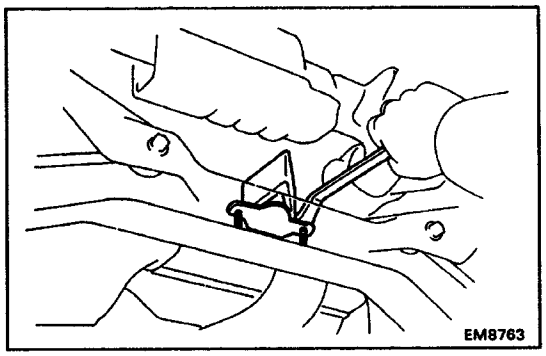

(f) install the damper with the two bolts.
Torque: 21 N–m (210 kgf–cm, 15 ft–lbf)

3. CONNECT CABLE TO NEGATIVE TERMINAL OF BATTERY
4. PERFORM ON–VEHICLE INSPECTION
(See steps 5 to 7 in On–Vehicle Inspection)

Gb1L–01

ALTERNATOR INSTALLATION (5S– FE)

(See Components for Removal and Installation)
1. INSTALL ALTERNATOR

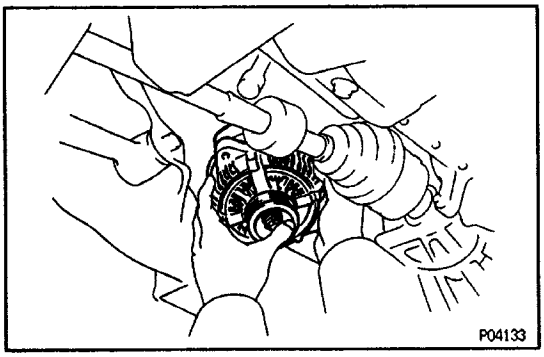

(a) Pass the alternator between the suspension cross–member and drive shaft.

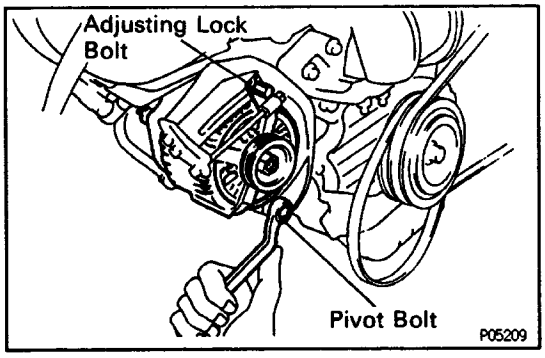

(b) Mount the alternator on the alternator bracke with the pivot bolt and adjusting lock bolt. Do not tighten the bolts yet.

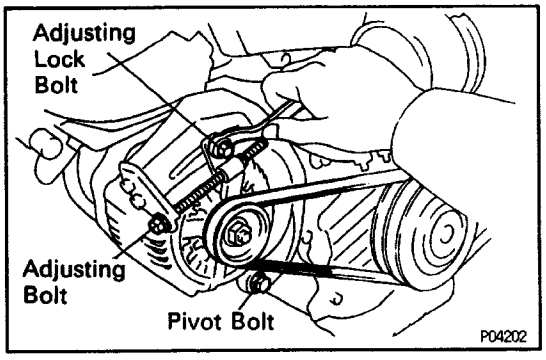

(c) Install the drive belt with the adjusting bolt.
(d) Adjust the drive belt with the adjusting bolt.
(See step 3 in On–Vehicle Inspection)
(e) Tighten the adjusting lock bolt and pivot bolt.

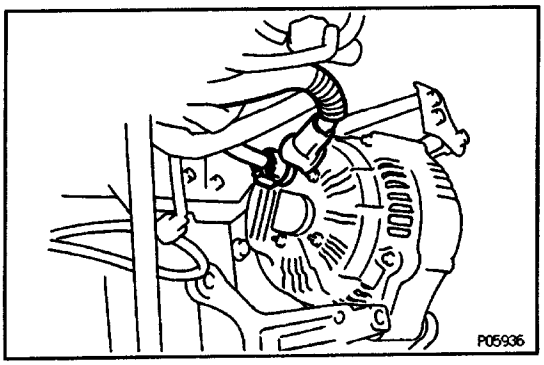

(f) Connect the alternator connector.
(g) Connect the alternator wire with the nut.

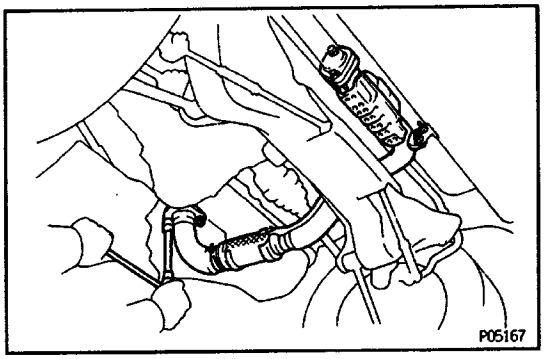

2. INSTALL FRONT EXHAUST PIPE

(a) Place two new gaskets to the front and rear of the front exhaust pipe.
(b) Using a 14 mm deep socket wrench, install the front exhaust pipe with three new nuts.

Torque: 62 N–m (630 kgf–cm, 46 ft–lbf)

(c) Install the two bolts holding the front exhaust pipe to the tailpipe.

Torque: 43 N–m (440 kgf–cm, 32 ft–lbf)

(d) Install the two bolts holding the front exhaust pipe bracket to the tailpipe bracket.

Torque: 19 N–m (190 kgf–cm, 14 ft–lbf)

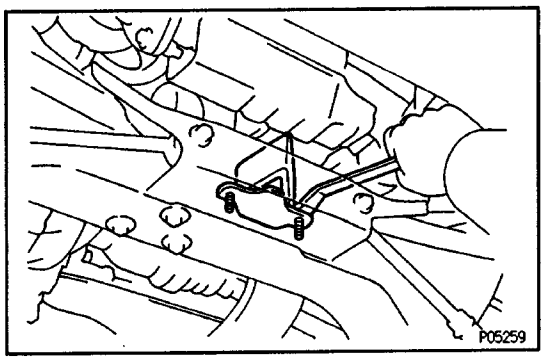

(e) (CALIF. only)
Install the damper with the two bolts.

Torque: 21 N–m (210 kgf–cm, 15 ft–lbf)

3. CONNECT CABLE TO NEGATIVE TERMINAL OF BATTERY

4. PERFORM ON–VEHICLE INSPECTION

(See steps 5 to 7 in On–Vehicle Inspection)

CHARGING SYSTEM

DESCRIPTION

The alternator is a small, high rpm, high performance type with an IC regulator incorporated
The IC regulator uses integrated circuits and controls the voltage produced by the alternator.

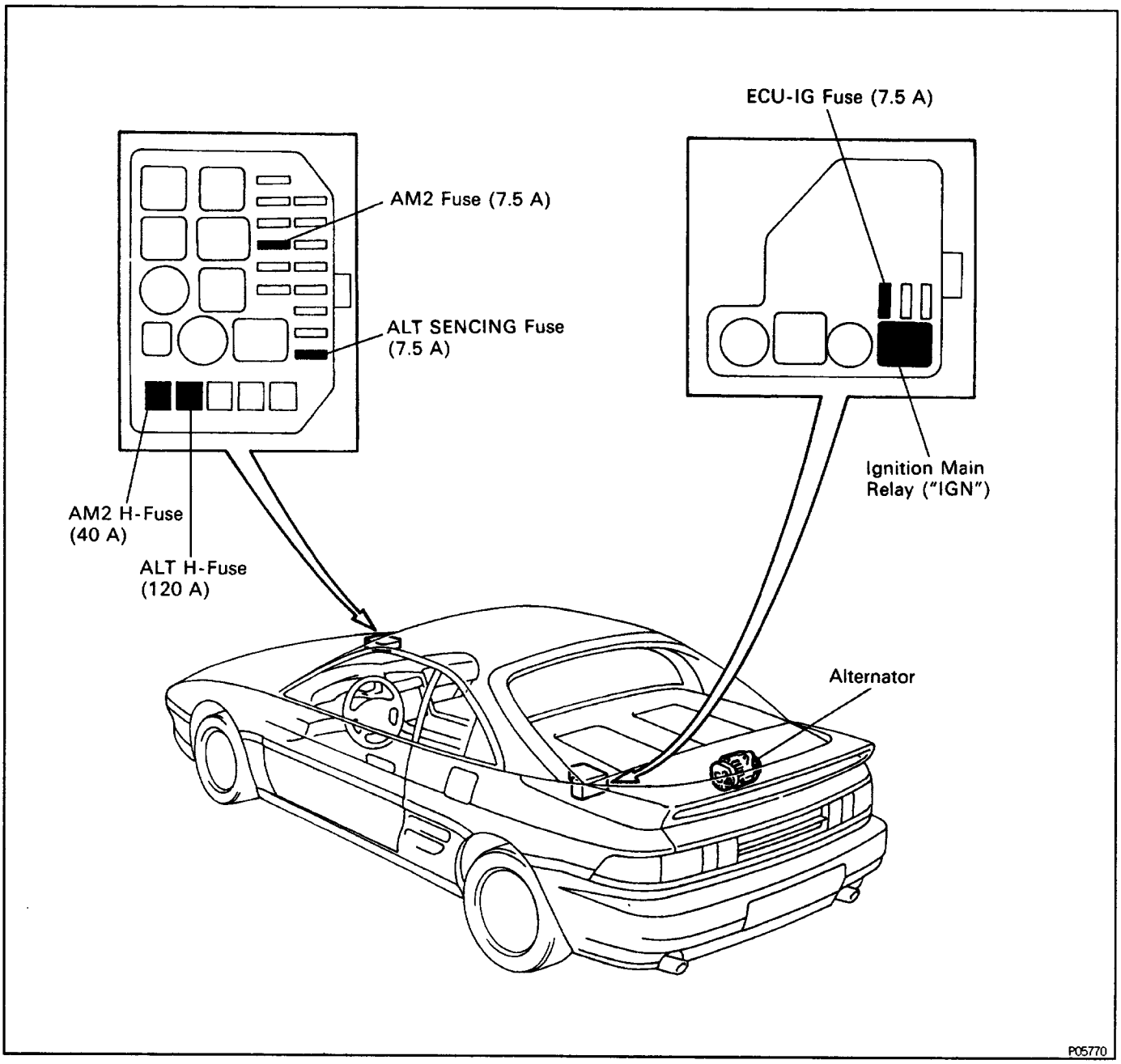

PRECAUTION

1. Check that the battery cables are connected to the correct terminals.
2. Disconnect the battery cables when the battery is given a quick charge.
3. Do not perform tests with a high voltage insulation resistance tester.
4. Never disconnect the battery while the engine is running.

CH00J–02

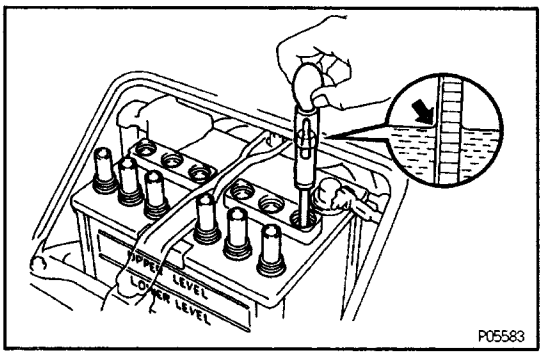

ON–VEHICLE INSPECTION

1. CHECK BATTERY SPECIFIC GRAVITY AND ELECTROLYTE LEVEL CH02E–01

(a) Check the electrolyte level of each cell.
If insufficient, refill with distilled (or purified) water.

(b) Check the specific gravity of each cell.

Standard specific gravity at 20° C (68° F):
1.25 – 1.27

If the gravity is less than specification, charge the battery.

HINT: Check the indicator as shown in the illustration.

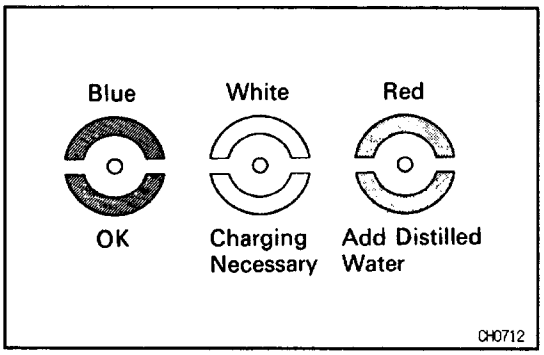

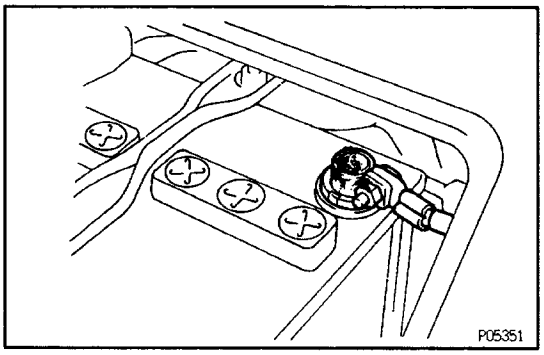

2. CHECK BATTERY TERMINALS, FUSIBLE LINK AND FUSES

(a) Check that the battery terminals are not loose or corroded.

(b) Check the fusible link, H–fuses and fuses for continuity.

Fusible link:
2.01.
H–Fuse:
AM2 40A
ALT 120A
Fuse:
AM2 7.5A
ECU–IG 7.5A
ALT SENCING 7.5A

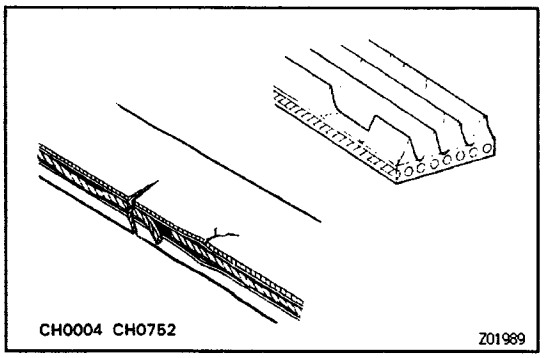

3. INSPECT DRIVE BELT

(a) Visually check the belt for excessive wear, frayed cords etc.

If any defect has been found, replace the drive belt.

HINT: Cracks on the rib side of a belt are considered acceptable. If the belt has chunks missing from the ribs, it should be replaced.

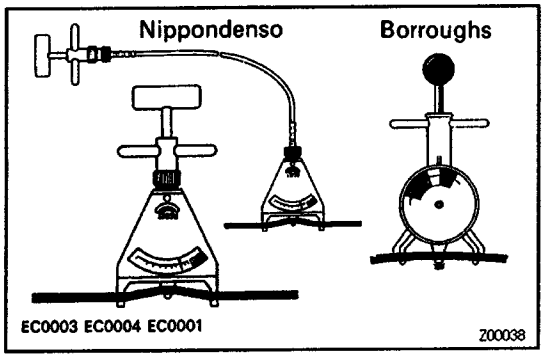

(b) Using a belt tension gauge, measure the belt tension.
Belt tension gauge:
Nippondenso BTG–20 (95506–00020)
Borroughs No. BT–33–73F

Drive belt tension:

New belt

120 ± 20 lbf

Used belt

104 ± 20 lbf

If the belt tension is not as specified, adjust it.

HINT:

- New belt" refers to a belt which has been used less than 5 minutes on a running engine.
- Used belt" refers to a belt which has been used on a running engine for 5 minutes or more.
- After installing a belt, check that it fits properly in the ribbed grooves.
- Check with your hand to confirm that the belt has not slipped out of the groove on the bottom of the pulley.
- After installing a new belt, run the engine for about 5 minutes and recheck the belt tension.

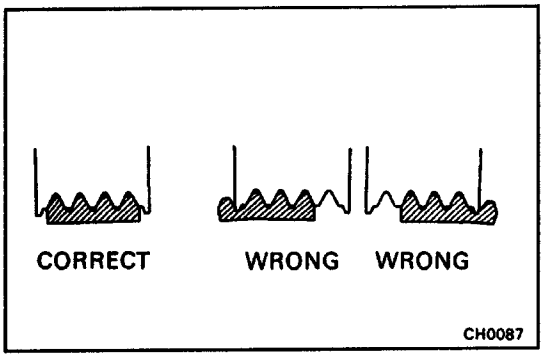

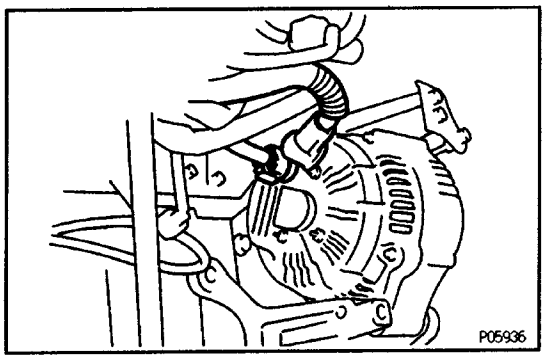

4. VISUALLY CHECK ALTERNATOR WIRING AND LISTEN FOR ABNORMAL NOISES

(a) Check that the wiring is in good condition.

(b) Check that there is no abnormal noise from the alternator while the engine is running.

5. INSPECT DISCHARGE WARNING LIGHT CIRCUIT

(a) Turn the ignition switch 'ON". Check that the discharge warning light comes on.

(b) Start the engine. Check that the light goes off.
If the light does not operate as specified, troubleshoot the discharge warning light circuit.

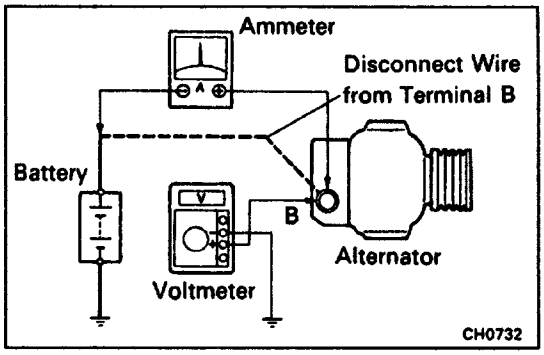

6. INSPECT CHARGING CIRCUIT WITHOUT LOAD

HINT: If a battery/alternator tester is available, connect the tester to the charging circuit as per manufacturer's instructions.

(a) If a tester is not available, connect a voltmeter and ammeter to the charging circuit as follows:

- Disconnect the wire from terminal B of the alternator and connect it to the negative (–) lead of the ammeter.
- Connect the positive (+) lead of the ammeter to terminal B of the alternator.
- Connect the positive (+) lead of the voltmeter to terminal B of the alternator.
- Ground the negative (–) lead of the voltmeter.

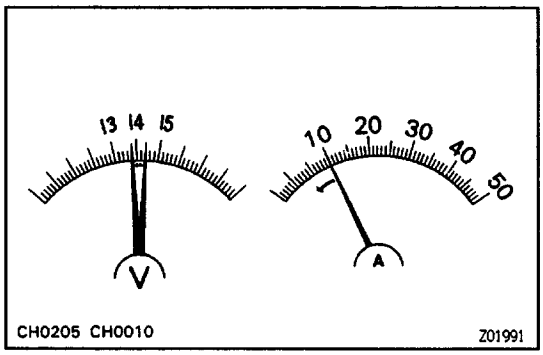

(b) Check the charging circuit as follows:

With the engine running from idle to 2,000 rpm, check the reading on the ammeter and voltmeter.

Standard amperage:

10 A or less

Standard voltage:

14.0 – 15.1 V at 260°C (77°F)

13.5 – 14.3 V at 115° C (239° F)

If the voltmeter reading is more than standard voltage, replace the IC regulator.

If the voltmeter reading is less than the standard voltage, check the IC regulator and alternator as follows:

- With, terminal F grounded, start the engine and check the voltmeter reading of terminal B.

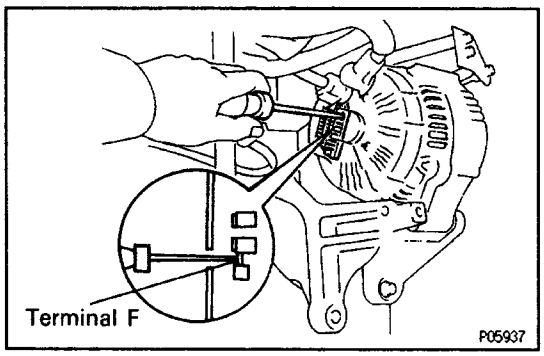

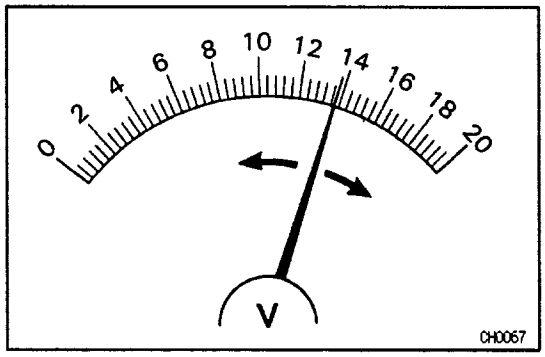

- If the voltmeter reading is more than standard voltage, replace the IC regulator.
- If the voltmeter reading is less than standard voltage, check the alternator–.

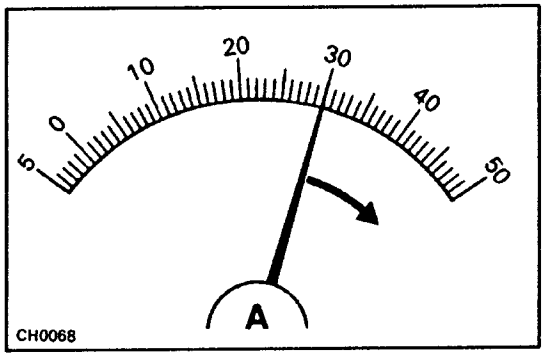

7. INSPECT CHARGING CIRCUIT WITH LOAD

(a) With the engine running at 2,000 rpm, turn on the high beam headlights and place the heater blower switch at "HI".

(b) Check the reading on the ammeter.

Standard amperage:

30 A or more

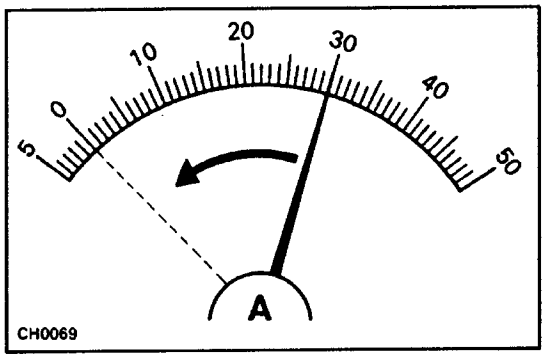

If the ammeter reading is less than standard amperage, repair the alternator.

HINT: If the battery is fully charged, the indication will sometimes be less than standard amperage.

OPERATION

When the ignition switch is turned ON, current from the battery flows from terminal L of the alternator through the IC regulator to terminal E, causing the discharge warning light to light up. Then when the engine is started, the voltage output increases as the alternator rpm increases. When the voltage output becomes greater than the battery voltage, current for recharging flows from terminal B. Simultaneously, voltage at terminal L increases and the potential difference between battery and terminal L disappears, causing the discharge warning light to go off. When the voltage output exceeds the regulator adjustment voltage, the transistor inside the IC regulator regulates the voltage so that the voltage from the alternator remains constant.

DESCRIPTION

The alternator is a small, high rpm, high performance type with an IC regulator incorporated
The IC regulator uses integrated circuits and controls the voltage produced by the alternator.

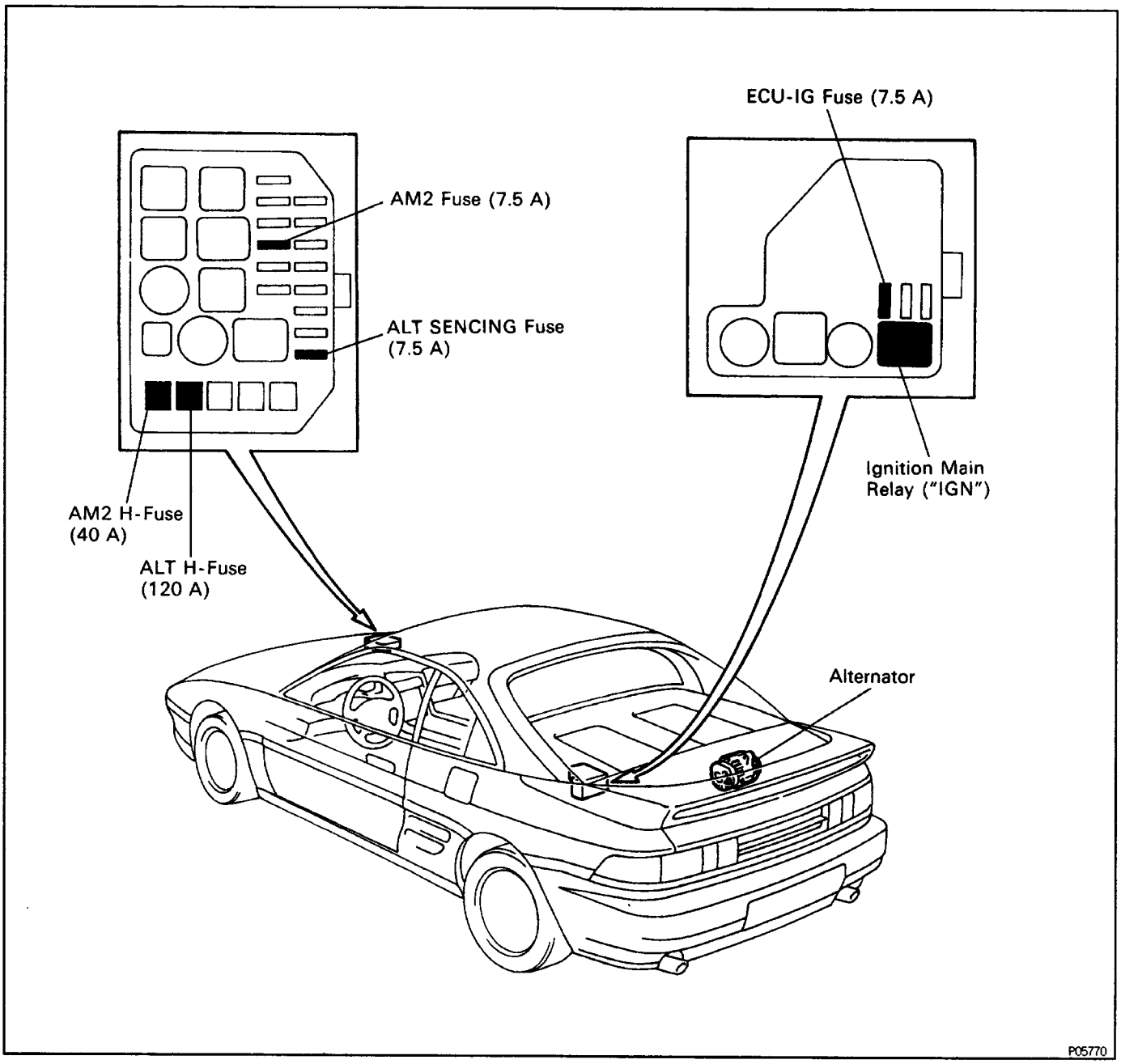

PRECAUTION

1. Check that the battery cables are connected to the correct terminals.
2. Disconnect the battery cables when the battery is given a quick charge.
3. Do not perform tests with a high voltage insulation resistance tester.
4. Never disconnect the battery while the engine is running.

CH00J–02

PREPARATION

CH00Q–01

SST (SPECIAL SERVICE TOOLS)

	09285–76010 Injection Pump Camshaft Bearing Cone Replace	Rotor rear bearing cover
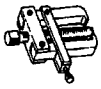	09286–46011 Injection Pump Spline Shaft Puller	Rectifier end frame
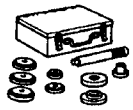	09608–20012 Front Hub & Drive Pinion Bearing Tool Set	
	(09608–00030) Replacer	Rotor front bearing
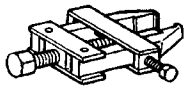	09820–00021 Alternator Rear Bearing Puller	
	09820–00030 Alternator Rear Bearing Replacer	Rotor rear bearing
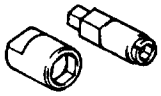	09820–63010 Alternator Pulley Set Nut Wrench Set	

CH00S–01

RECOMMENDED TOOLS

	09082–00015 TOYOTA Electrical Tester	

CH00U–02

EQUIPMENT

Ammeter(A)	
Battery specific gravity gauge	
Belt tension gauge	
Torque wrench	
Vernier calipers	Rotor (Slip ring), Brush

IGNITION MAIN RELAY

(See IG section in 3S–GTE Engine) ST014–02

SERVICE SPECIFICATIONS

CH01A–02

SERVICE DATA

Battery	Specific gravity (When full charge at 20° C (68° F))	1.25 – 1.27
Drive belt	Tension	
	New belt	120 ± 20 lbf
	Used belt	104 ± 20 lbf
Alternator	Rated output	12 V – 70 A, 12 V – 80 A, 12 V – 90 A
	Rotor coil resistance	2.8 – 3.0 Ω
	Slip ring diameter (STD)	14.2 mm – 14.4 mm (0.559 – 0.567 in.)
	Slip ring diameter (Minimum)	12.8 mm (0.504 in.)
	Brush exposed length (STD)	10.5 mm (0.413 in.)
	Brush exposed length (Minimum)	1.5 mm (0.59 in.)
Alternator regulator (IC)	Regulating voltage at 25 ° C (77° F)	14.0 – 15.1 V
	Regulating voltage at 115° C (239° F)	13.5 – 14.3 V

CH01C–02

TORQUE SPECIFICATIONS

Part tightened	N·m	kgf·cm	ft·lbf
Alternator pulley nut	110	1,125	81
TWC (main) x Exhaust manifold	29	300	22
Tailpipe x Front exhaust pipe	43	440	32
Tailpipe bracket x Front exhaust pipe bracket	19	190	14
Suspension member damper x Suspension crossmember	21	210	15
Exhaust pipe support bracket x Suspension crossmember (3S–GTE)	21	210	15

SYSTEM CIRCUIT

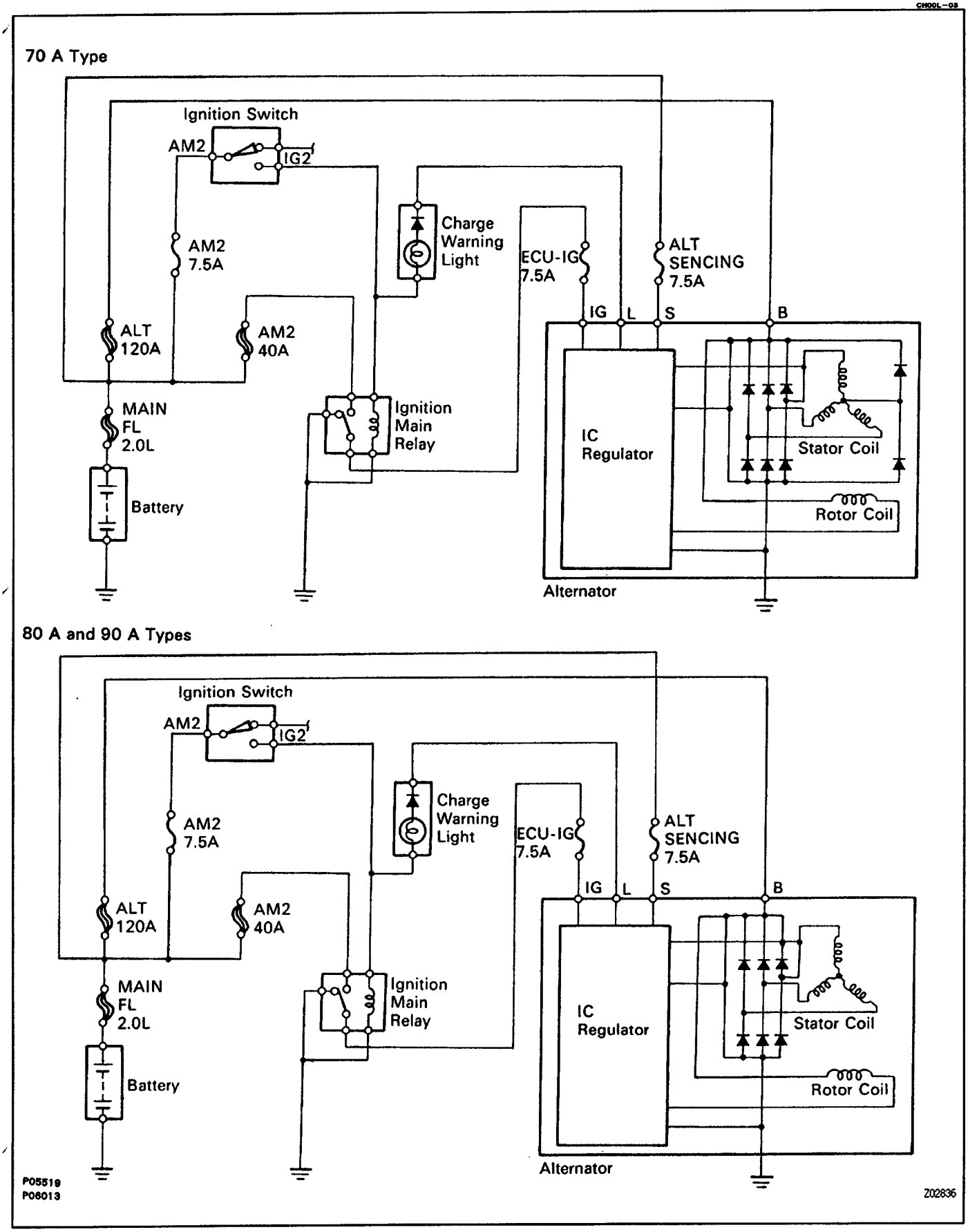

CLUTCH MASTER CYLINDER

COMPONENTS

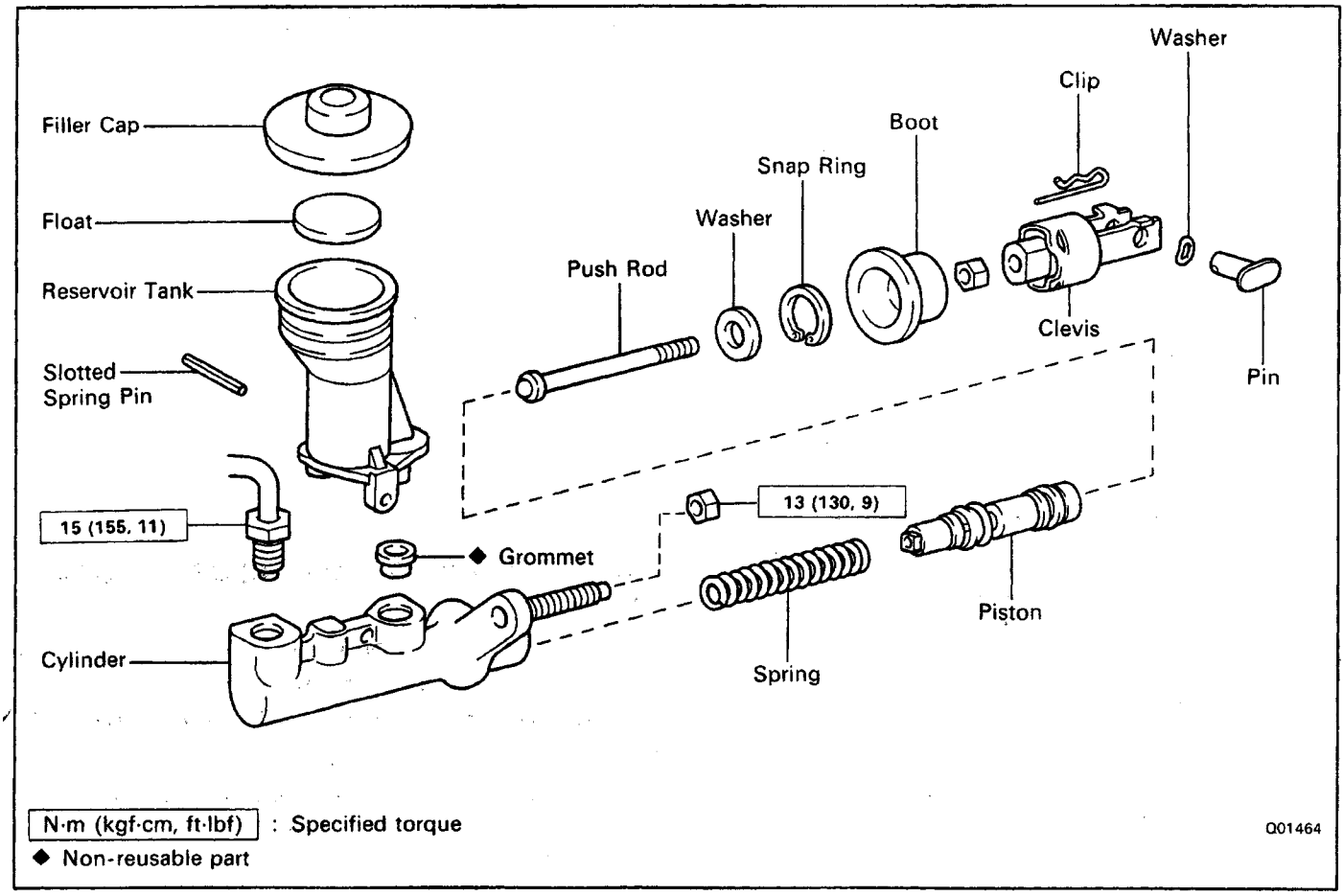

CL01M–01

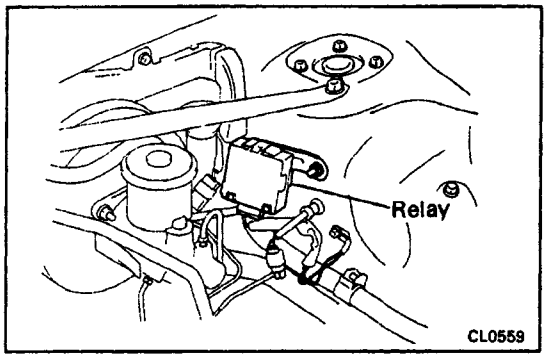

MASTER CYLINDER REMOVAL

1. REMOVE PUSH ROD PIN

2. REMOVE RETRACTOR CONTROL RELAY

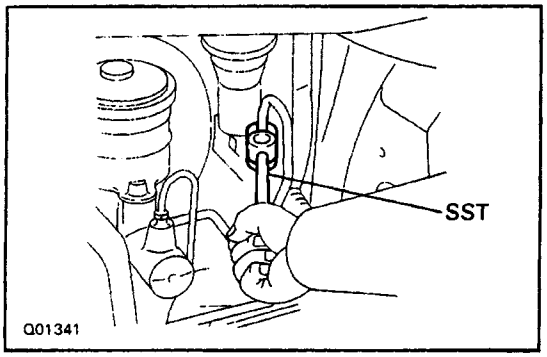

3. DISCONNECT CLUTCH LINE UNION

Using SST, disconnect the union nut.

SST 09023–00100

4. REMOVE MASTER CYLINDER

(a) Remove the two mounting nuts.

(b) Pull out the master cylinder.

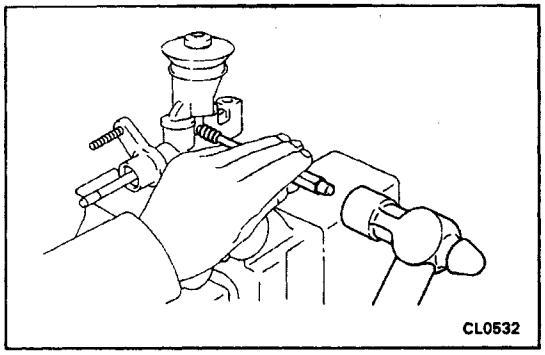

MASTER CYLINDER DISASSEMBLY

CL01N–01

1. REMOVE RESERVOIR TANK

(a) Using a pin punch and a hammer, drive out the slotted spring pin.

(b) Remove reservoir tank and grommet.

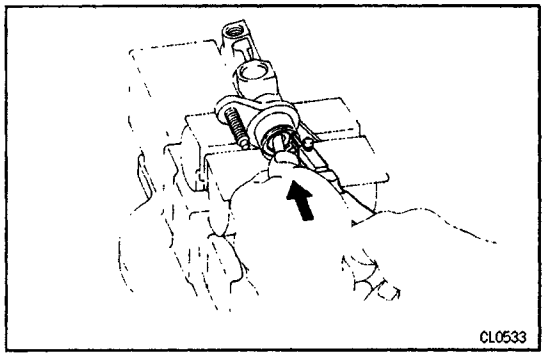

2. REMOVE PUSH ROD

(a) Pull back the boot and, using snap ring pliers, remove the snap ring.

(b) Pull out the push rod and washer.

(c) Remove the piston from the cylinder.

MASTER CYLINDER INSPECTION

CL01P–01

HINT: Clean the disassembled parts with compressed air.

1. INSPECT MASTER CYLINDER BORE FOR SCORING OR CORROSION.

If a problem is found, clean or replace the cylinder.

2. INSPECT PISTON AND CUPS FOR WEAR, SCORING CRACKS OR SWELLING

If either one requires replacement, use the parts from the cylinder kit.

3. INSPECT PUSH ROD FOR WEAR OR DAMAGE

If necessary, replace the push rod.

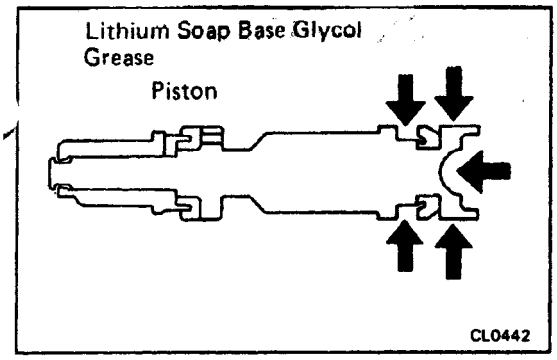

MASTER CYLINDER ASSEMBLY

1. COAT PARTS WITH LITHIUM SOAP BASE GLYCOL GREASE, AS SHOWN

2. INSERT PISTON INTO CYLINDER

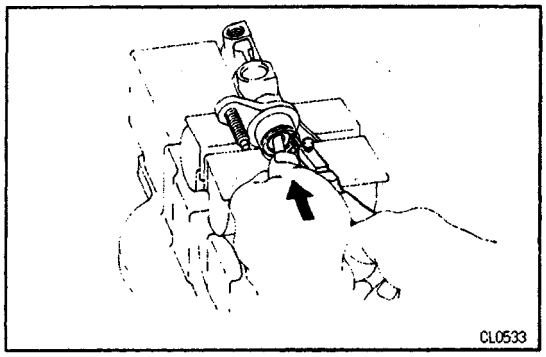

3. INSTALL PUSH ROD ASSEMBLY WITH SNAP RING

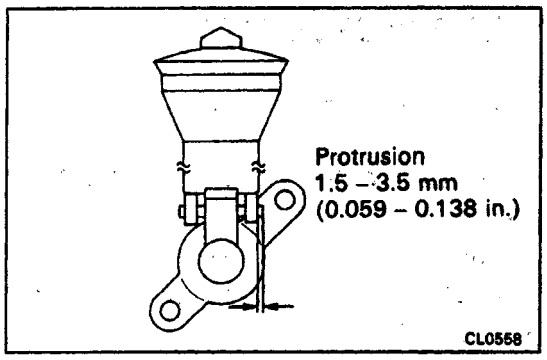

4. INSTALL RESERVOIR TANK

(a) Install the reservoir tank and new grommet.

(b) Using a pin punch and a hammer, drive in the slotted spring pin.

MASTER CYLINDER INSTALLATION

1. INSTALL MASTER CYLINDER

Install the two mounting nuts, and torque them.

Torque: 13 N–m (130 kgf–cm. 9 ft–lbf)

2. CONNECT CLUTCH LINE UNION

Using SST, connect the union.

SST 09023–04100

Torque: 15 N–m (155 kgf–cm. 11 ft–lbf)

3. INSTALL RETRACTOR CONTROL RELAY

4. CONNECT PUSH ROD AND INSTALL PIN

Install the clip in the push rod pin.

6. BLEED SYSTEM AND ADJUST CLUTCH PEDAL

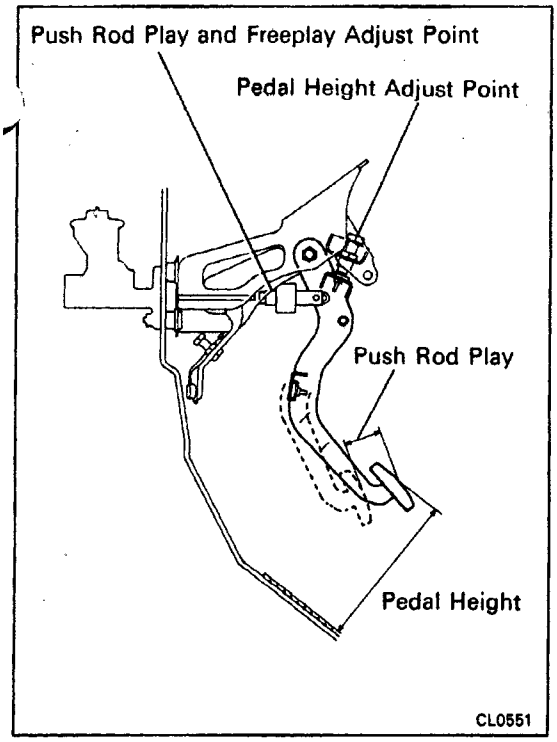

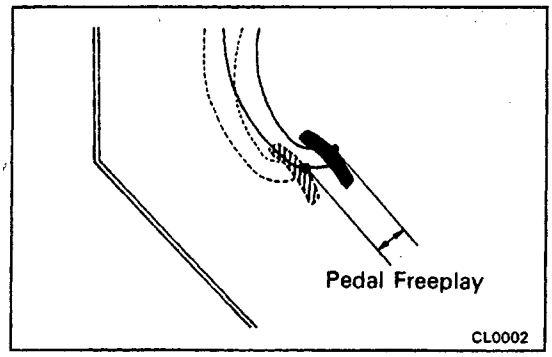

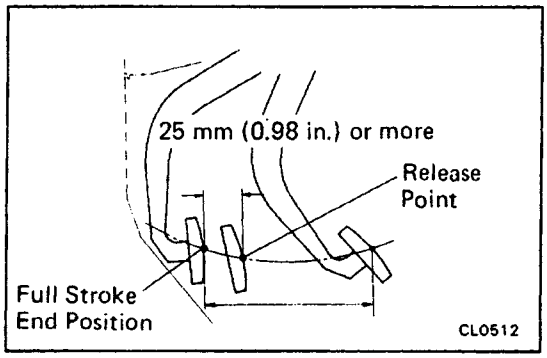

CLUTCH PEDAL

CL01K–01

CLUTCH PEDAL CHECK AND ADJUSTMENT

1. CHECK THAT PEDAL HEIGHT IS CORRECT

Pedal height from asphalt sheet:

172–182 mm (6.8–7.2 in.)

2. IF NECESSARY, ADJUST PEDAL HEIGHT

Loosen the lock nut and turn the stopper bolt until the height is correct. Tighten the lock nut.

3. CHECK THAT PEDAL FREEPLAY AND PUSH ROD PLAY ARE CORRECT

(Pedal Freeplay)

Push in on the pedal until the beginning of clutch resistance is felt.

Pedal freeplay:

5.0–15.0 mm (0.197–0.591 in.)

(Push rod play)

Push in on the pedal with a finger softly until the resistance begins to increase a little.

Push rod play at pedal top:

1.0–5.0 mm (0.039–0.197 in.)

4. IF NECESSARY, ADJUST PEDAL FREEPLAY AND PUSH ROD PLAY

(a) Loosen the lock nut and turn the push rod until the freeplay and push rod play are correct.

(b) Tighten the lock nut.

(c) After adjusting the pedal freeplay, check the pedal height.

5. INSPECT CLUTCH RELEASE POINT

(a) Pull the parking brake lever and instal) wheel stopper.

(b) Start the engine and idle the engine.

(c) Without depressing the clutch pedal, slowly shift the shift lever into reverse position until the gears con–tact.

(d) Gradually depress the clutch pedal and measure the stroke distance from the point the gear noise stops (release point) up to the full stroke end position.

Standard distance:

25 mm (0.98 in.) or more

(From pedal stroke end position to release point)

If the distance is not as specified, perform the fol–lowing operation.

- Inspect pedal height.
- Inspect push rod play and pedal free play.
- Bleed the clutch line.
- Inspect the clutch cover and disc.

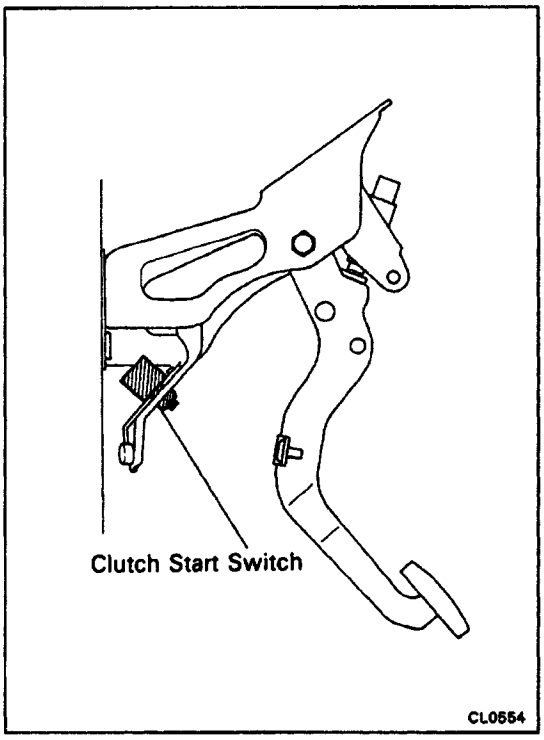

8. CHECK CLUTCH START SYSTEM

(a) Check that the engine does not start when the clutch pedal is released.

(b) Check that the engine starts when the clutch pedal is fully depressed.

If necessary, adjust or replace the clutch start switch.

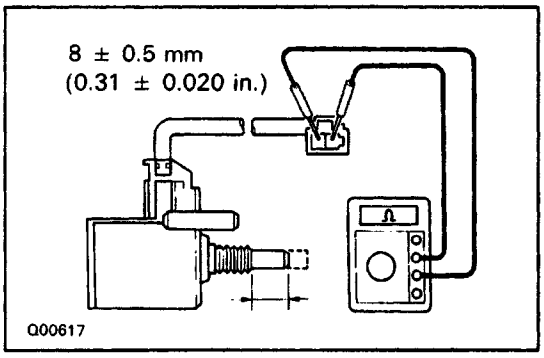

7. INSPECT CONTINUITY OF CLUTCH START SWITCH

(a) Check that there is continuity between terminals when the switch is ON (pushed).

(b) Check that there is no continuity between terminals when the switch is OFF (free).

If continuity is not as specified, replace the switch.

CLUTCH RELEASE CYLINDER

CL01S–01

COMPONENTS

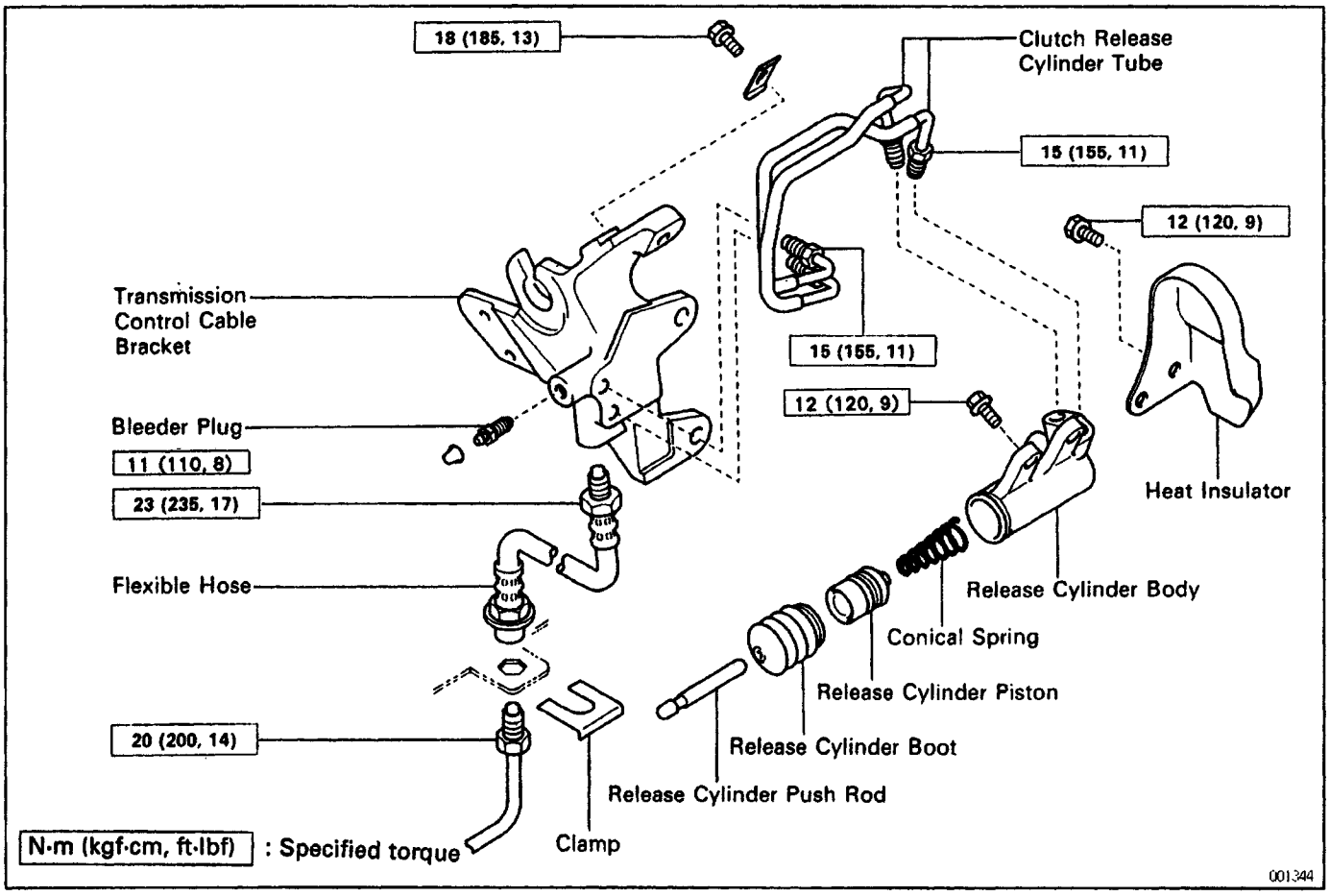

CL01T–01

RELEASE CYLINDER REMOVAL

1. REMOVE NO.1 ENGINE UNDER COVER

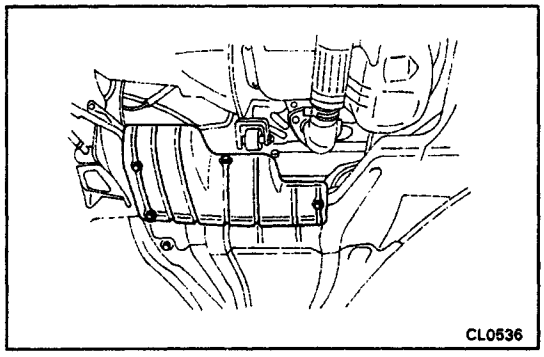

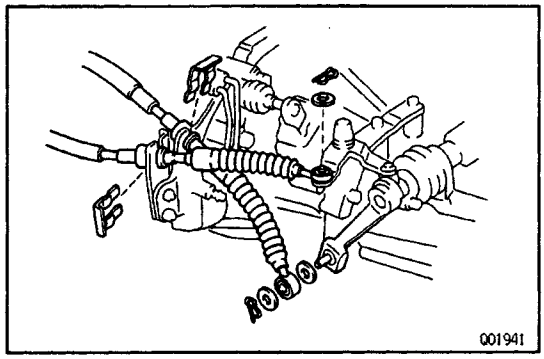

2. DISCONNECT CONTROL CABLE

(a) Remove the clip and washers.

(b) Remove the retainer from the cable.

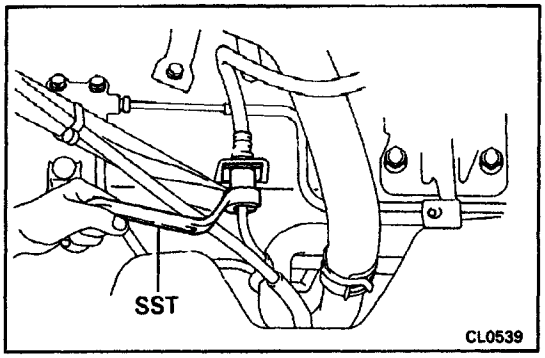

3. DISCONNECT CLUTCH LINE UNION

(a) Using SST, disconnect the union. Use a container to catch the brake fluid.
SST 09751 –3601 1

(b) Remove the retainer.

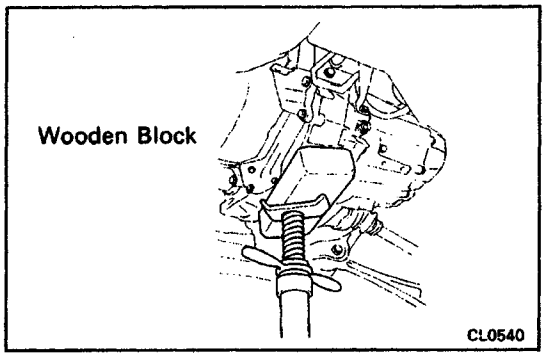

4. SUPPORT ENGINE AND TRANSAXLE

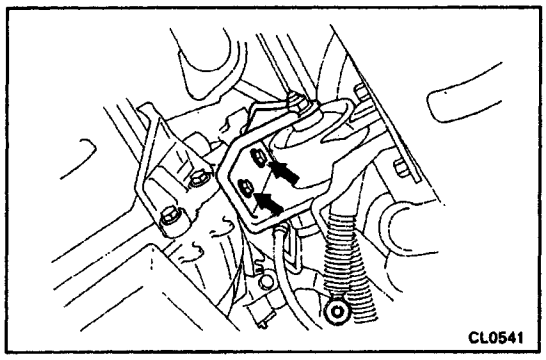

5. REMOVE ENGINE FRONT MOUNTING BRACKET SET BOLTS

Remove the two bolts from engine side.

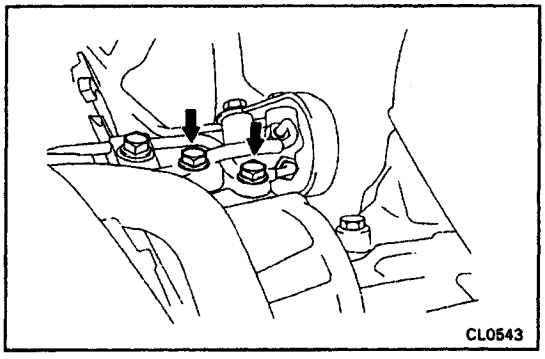

6. REMOVE BOLT AND PULL OUT RELEASE CYLINDER ASSEMBLY

RELEASE CYLINDER DISASSEMBLY CL01U–01

1. PULL OUT PUSH ROD

2. REMOVE BOOT

3. REMOVE PISTON

Using compressed air, remove the piston and spring from the cylinder.

RELEASE CYLINDER INSPECTION

HINT: Clean the disassembled parts with comer air.

1. INSPECT RELEASE CYLINDER BORE FOR SCORING OR CORROSION

If a problem is found, clean or replace the cylinder.

2. INSPECT PISTON AND CUPS FOR WEAR, SCORING CRACKS OR SWELLING

If either one requires replacement, use the parts from the cylinder kit.

3. INSPECT PUSH ROD FOR WEAR OR DAMAGE

If necessary, replace the push rod.

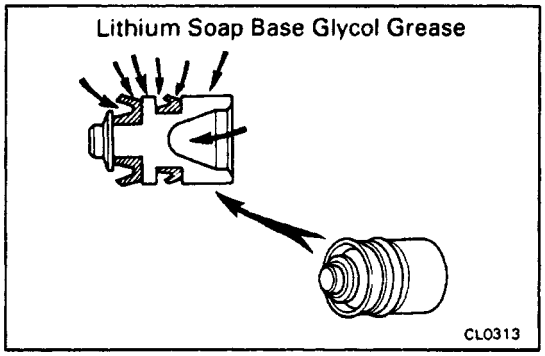

RELEASE CYLINDER ASSEMBLY

1. COAT PISTON WITH LITHIUM SOAP BASE GLYCOL GREASE, AS SHOWN

2. INSTALL PISTON

3. INSTALL BOOT AND INSERT PUSH ROD

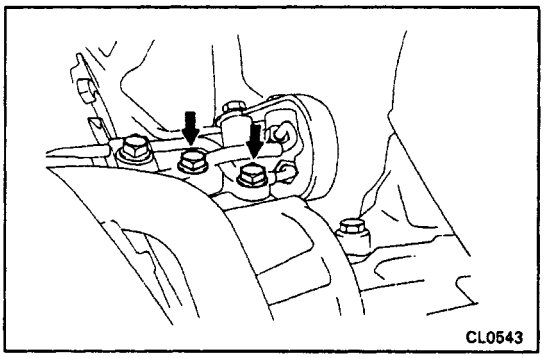

RELEASE CYLINDER INSTALLATION

1. INSTALL RELEASE CYLINDER

Torque: 12 N–m (120 kgf–cm. 9 ft–lbf)

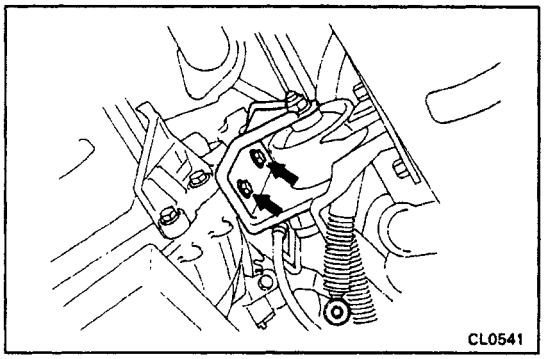

2. INSTALL ENGINE FRONT MOUNTING BRACKET SET BOLTS

Torque: 77 N–m (790 kgf–cm, 57 ft–lbf)

3. REMOVE SUPPORTS FOR ENGINE AND TRANSAXLE

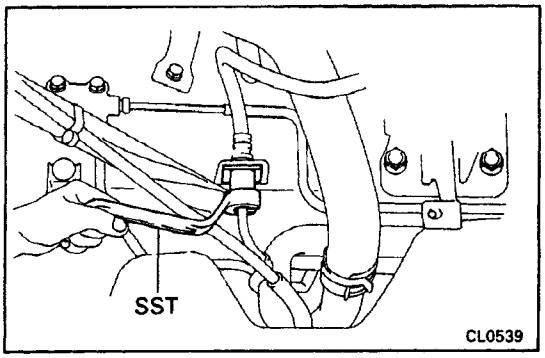

4. CONNECT CLUTCH LINE UNION

(a) Using SST, connect the union.

SST 09751 –3601 1

Torque: 20 N–m (200 kgf–cm. 14 ft–lbf)

(b) Install the retainer.

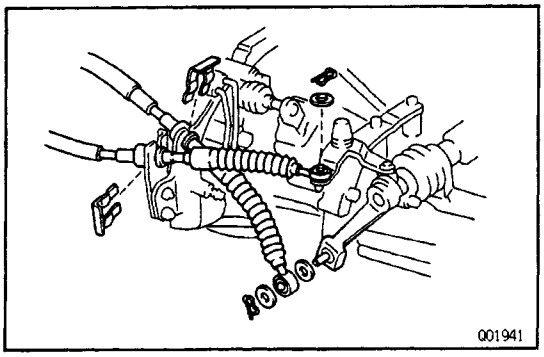

5. CONNECT CONTROL CABLE

(a) Install the cable and retainer.

(b) Install the washers and clip.

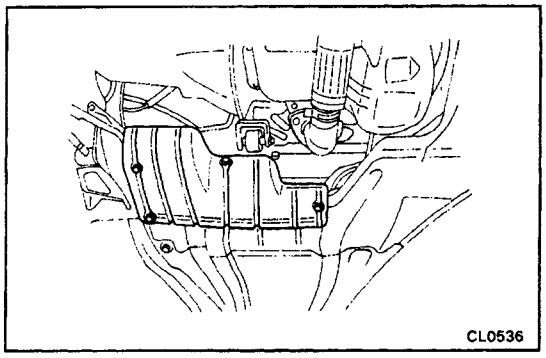

6. INSTALL NO.1 ENGINE UNDER COVER

7. BLEED CLUTCH SYSTEM

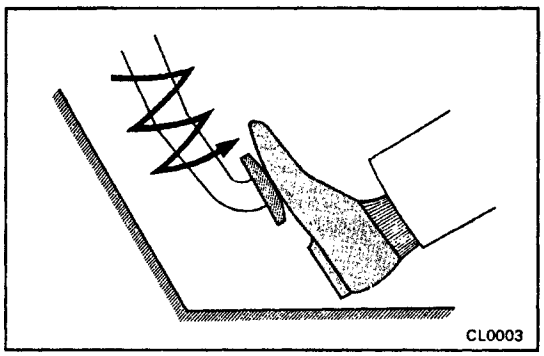

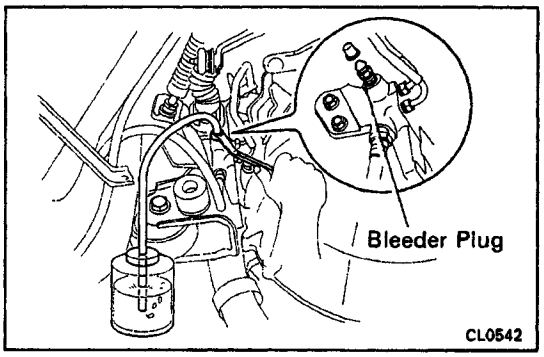

CLUTCH SYSTEM BLEEDING

HINT: If any work is done on the clutch system or if air is suspected in the clutch lines, bleed the system of air.

NOTICE: Do not let brake fluid remain on a painted surface. Wash it off immediately.

1. FILL CLUTCH RESERVOIR WITH BRAKE FLUID

Check the reservoir frequently. Add fluid if necessary.

2. CONNECT VINYL TUBE TO BLEEDER PLUG

Insert the other end of the tube in a half–full container of brake fluid.

3. BLEED CLUTCH LINE

(a) Slowly pump the clutch pedal several times.

(b) While pressing on the pedal, loosen the bleeder plug until the fluid starts to run out. Then close the bleeder plug.

(c) Repeat this procedure until there are no more air bubbles in the fluid.

CLUTCH UNIT

CL01Y–01

COMPONENTS

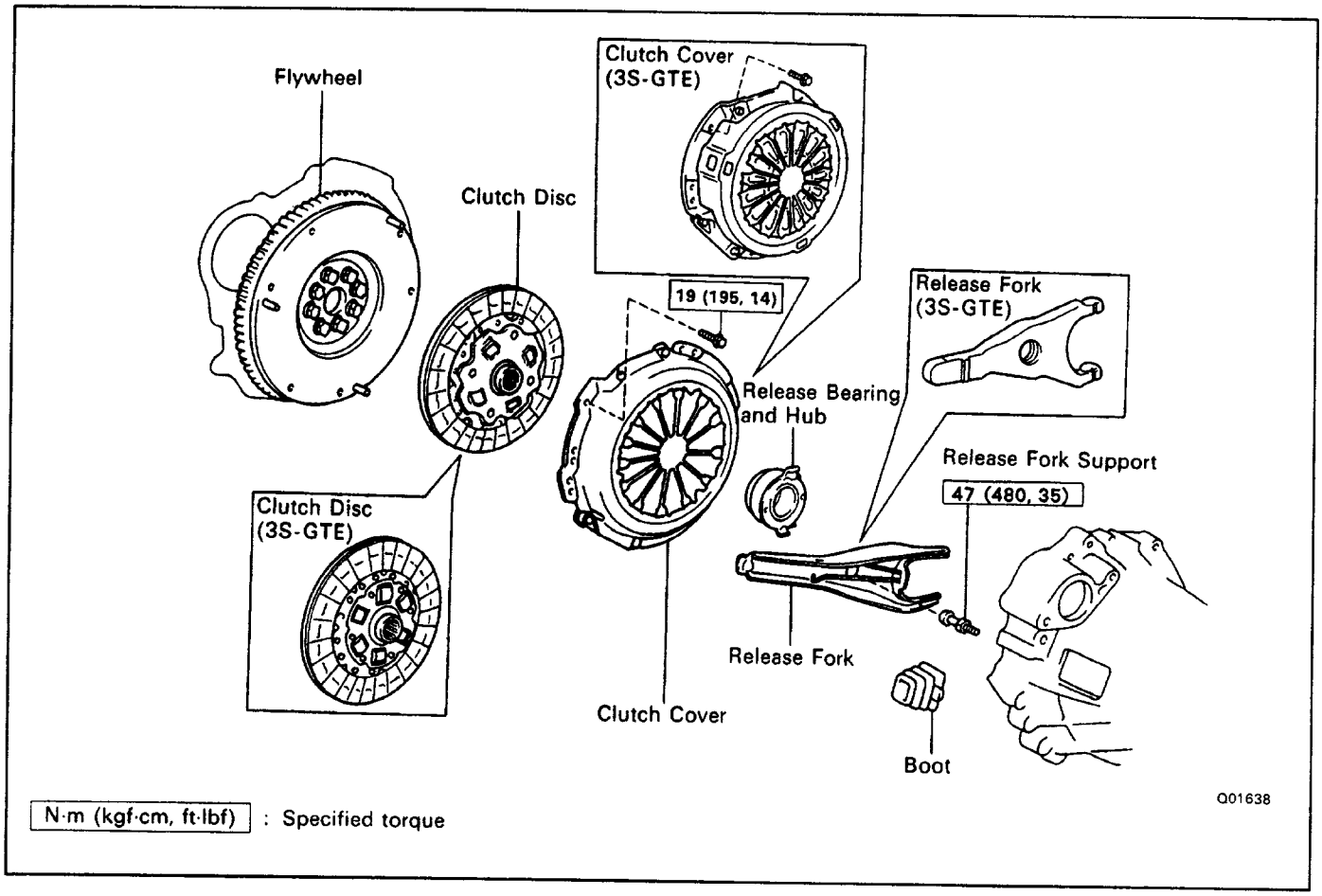

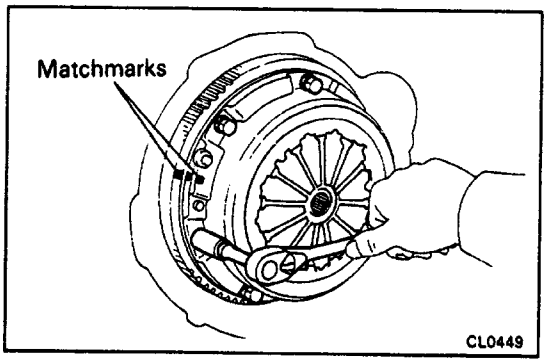

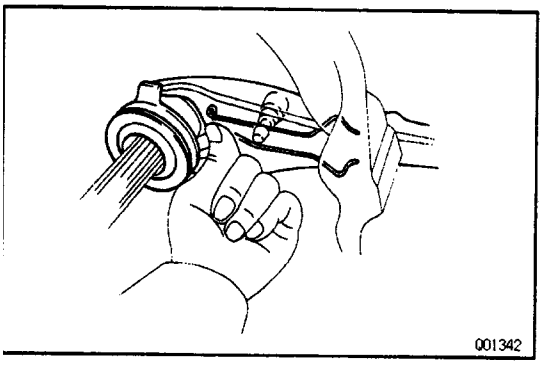

CLUTCH UNIT REMOVAL

CL01Z–01

1. REMOVE TRANSAXLE
(See page S54 MX–8 and E153 MX–9)

2. REMOVE CLUTCH COVER AND DISC

(a) Put matchmarks on the clutch cover and flywheel.
(b) Loosen the set bolts one turn at a time until spring tension is released.
(c) Remove the set bolts and pull off the clutch cover and disc.

3. REMOVE BEARING, HUB AND FORK FROM TRANSAXLE

(a) Remove the retaining clip, pull off the bearing.
(b) Remove the fork and boot.

CL020 – 01

CLUTCH PARTS INSPECTION

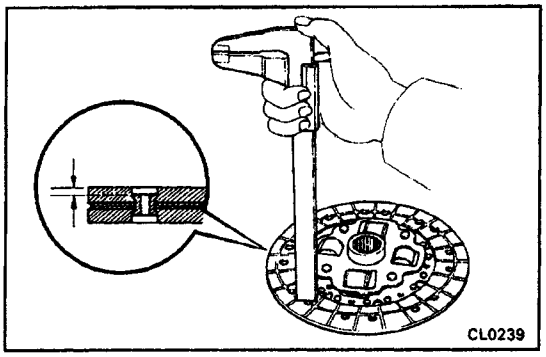

1. INSPECT CLUTCH DISC FOR WEAR OR DAMAGE

Using calipers, measure the rivet head depth.

Minimum rivet depth:

0.3 mm (0.012 in.)

If a problem is found, repair or replace the clutch disc.

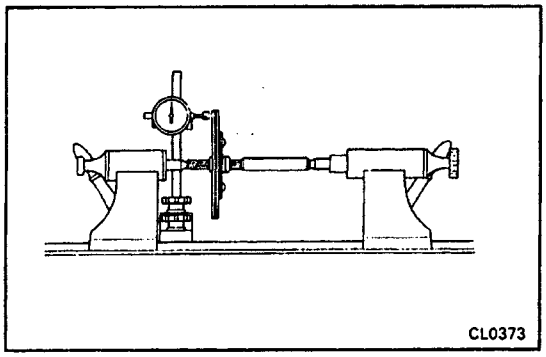

2. INSPECT CLUTCH DISC RUNOUT

Using a dial indicator, check the disc runout.

Maximum runout:

0.8 mm (0.031 in.)

If runout is excessive, replace the disc.

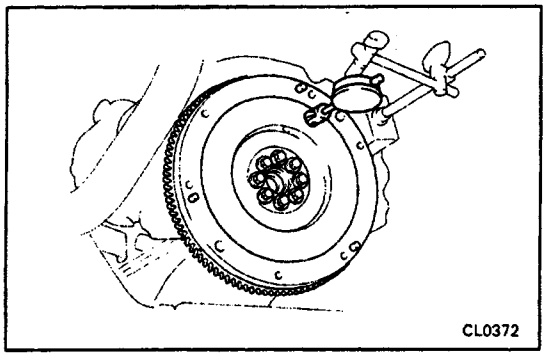

3. INSPECT FLYWHEEL RUN4UT

Using a dial indicator, check the flywheel runout.

Maximum runout:

0.1 mm (0.004 in.)

If runout excessive, repair or replace flywheel.

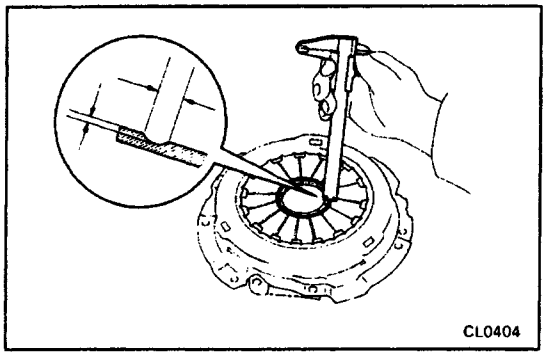

4. INSPECT DIAPHRAGM SPRING FOR WEAR

Using calipers, measure the diaphragm spring for depth and width of wear.

Maximum:

Depth 0.6 mm (0.024 in.)

Width 5.0 mm (0.197 in.)

If necessary, replace the clutch cover.

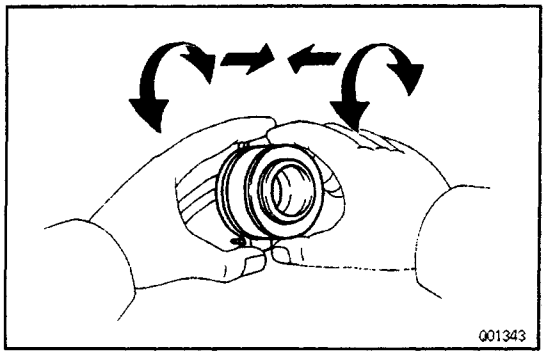

5. INSPECT RELEASE BEARING

Turn the bearing by hand while applying force in the rotation direction.

If the bearing sticks or has much resistance, replace the release bearing.

HINT: The bearing is permanently lubricated and re–quires no cleaning or lubrication.

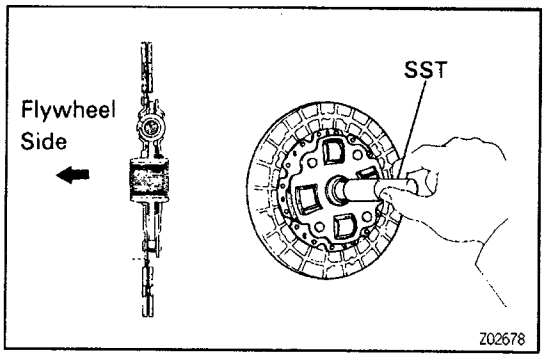

CLUTCH UNIT INSTALLATION

CL021–01

1. INSTALL DISC ON FLYWHEEL

Using SST, install the disc on the flywheel.
SST 09301 –00220 (3S– GTE)
09301 –00210 (5S–FE)

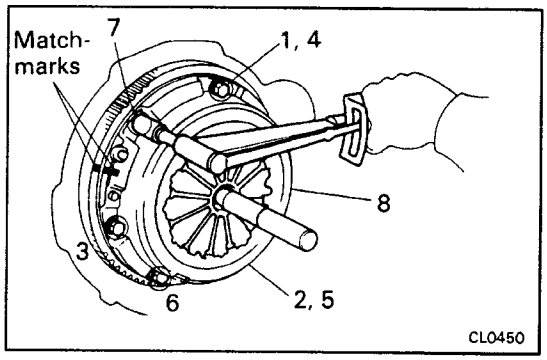

2. INSTALL CLUTCH COVER

(a) Align the matchmarks on the clutch cover and fly–wheel.
(b) Torque the bolts on the clutch cover in order shown.
Torque: 19 N–m (195 kgf–cm, 14 ft–lbf)

HINT: Temporarily tighten the No.1 and No.2 bolts.

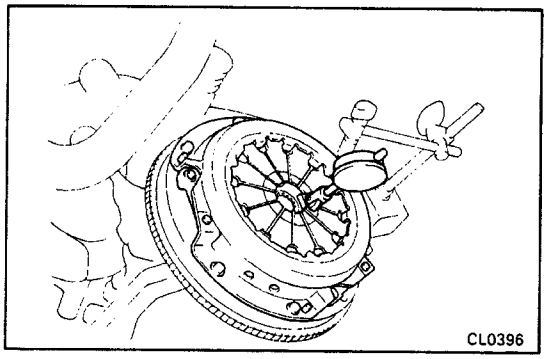

3. CHECK DIAPHRAGM SPRING TIP ALIGNMENT

Using a dial indicator with roller instrument, check the diaphragm spring tip alignment.
Maximum non–alignment:
0.5 mm (0.020 in.)

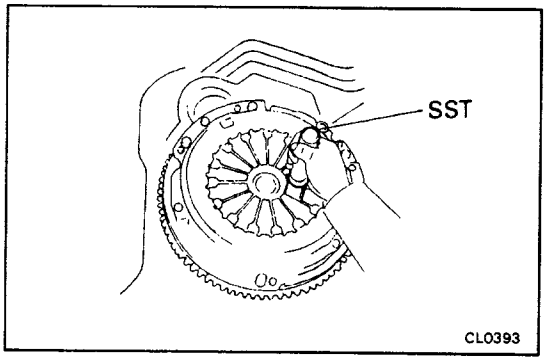

If alignment is not as specified, using SST, adjust the diaphragm spring tip alignment.
SST 09333–00013

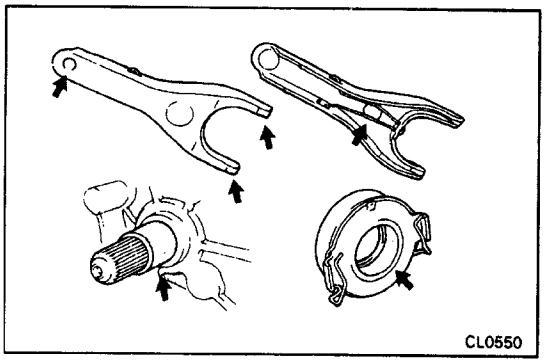

4. APPLY MOLYBDENUM DISULPHIDE LITHIUM BASE GREASE (NLGI NO.2)

Apply molybdenum disulphide lithium base grease the following parts:

- Release fork and hub contact point
- Release fork and push rod contact point
- Release fork pivot point
- Release bearing retainer
- Release bearing

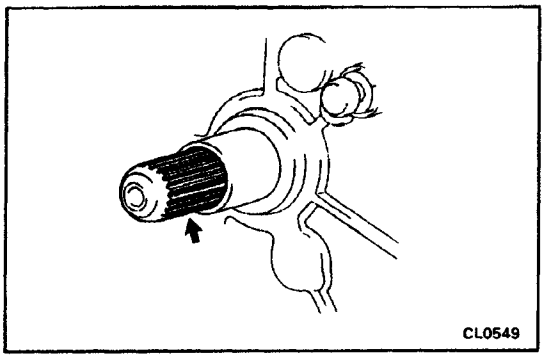

5. APPLY SPLINE GREASE TO INPUT SHAFT SPLINE

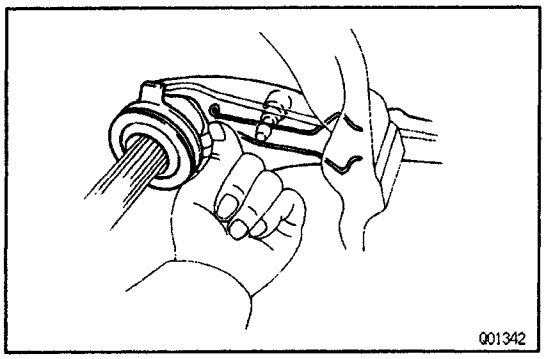

6. INSTALL BOOT, FORK, HUB AND BEARING ON TRANSAXLE

7. INSTALL TRANSAXLE

(See page S54 MX–8 and E153 MX–9)

CLUTCH

DESCRIPTION

The diaphragm spring turnover type clutch providing lighter release performance. CL01D–01

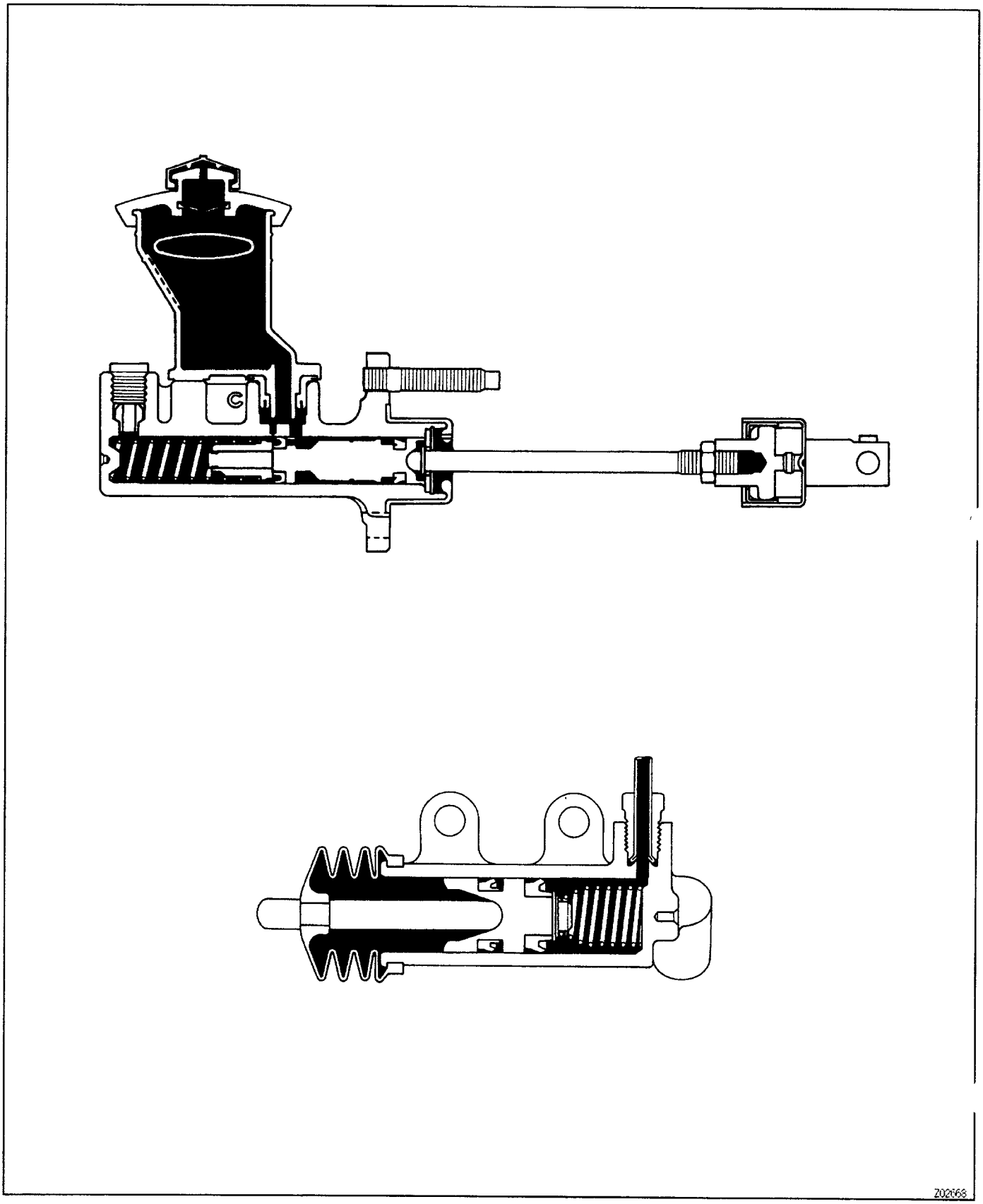

3S-GTE-Engine

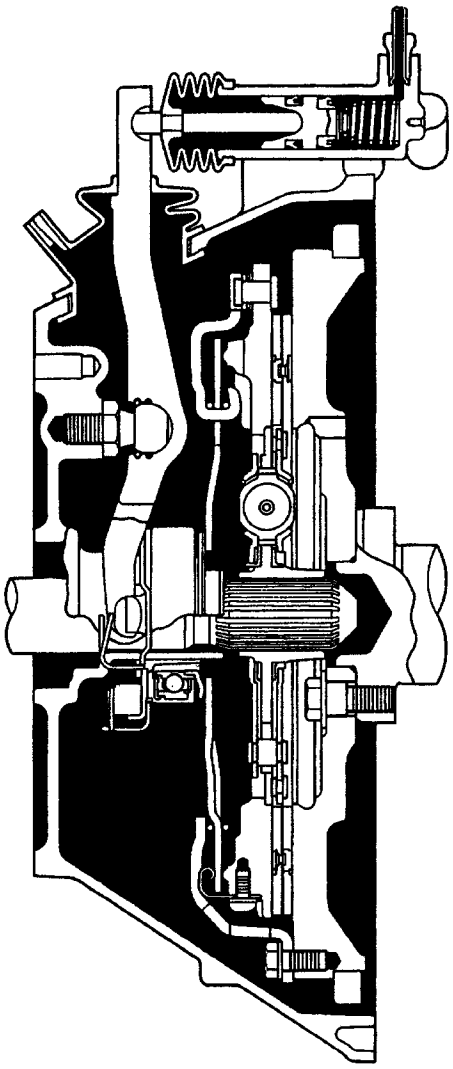

5S-FE-Engine

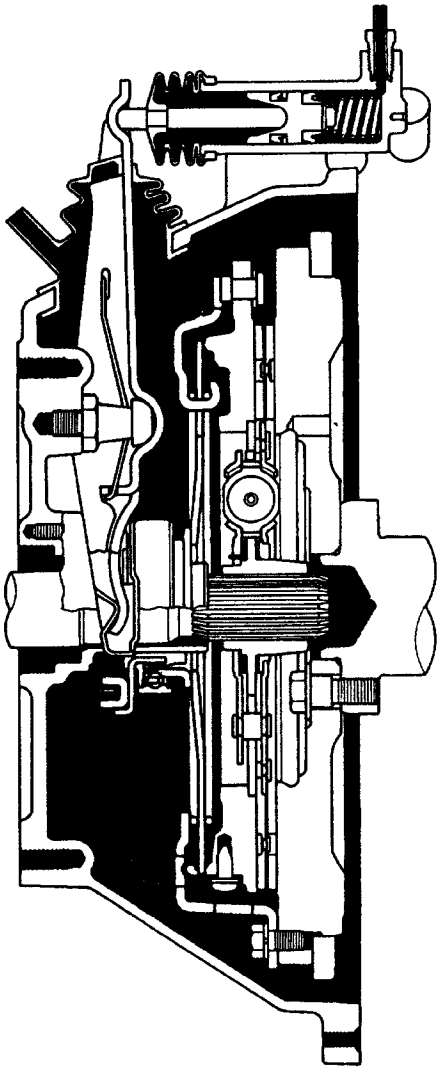

Q01460
Q01461

Z02669

PREPARATION

SST (SPECIAL SERVICE TOOLS)

CL01E–01

	09023–00100 Union Nut Wrench 10 mm	Clutch line tube.
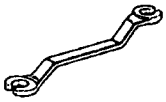	09751–36011 Brake Tube Union Nut 10 x 12 mm Wrench	Clutch line tube.
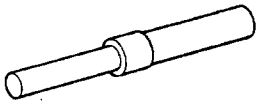	09301–00210 Clutch Guide Tool	5S–FE Engine
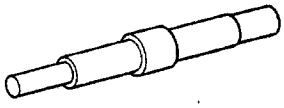	09301–00220 Clutch Guide Tool	3S–GTE Engine
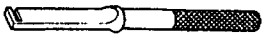	09333–00013 Clutch Diaphragm Spring Aligner	

RECOMMENDED TOOLS

CL01F–01

	09082–0001 5 TOYOTA Electrical Tester	
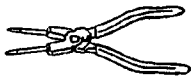	09905–00013 Snap Ring Pliers	

EQUIPMENT

CL01G–01

Calipers		
Dial indicator		
Torque wrench		

SERVICE SPECIFICATIONS

CL00P–09

SERVICE DATA

Pedal height from asphalt sheet	172–182mm (6.8–7.2¿n.)
Push rod play at pedal top	1.0–5.0mm (0.039–0.197in.)
Pedal freeplay	5.0–15.0mm (0.197–0.591 in.)
Clutch start switch ON–OFF Stroke	5.0±0.5mm (0.197–0.020in.)
Reservoir tank slotted spring pin protrusion	1.5–3.5mm (0.059–0.138in.)
Clutch release point from pedal full stroke end position	25 mm (0.98in.) or more
Disc rivet head depth (Minimum)	0.3mm (0.012in.)
Disc runout (Maximum)	0.8mm (0.031 in.)
Diaphragm spring tip non –alignment (Maximum)	0.5mm (0.020in.)
Diaphragm spring finger wear (Maximum depth)	0.6mm (0.024in.)
Diaphragm spring finger wear (Maximum width)	5.0mm (0.197in.)
Flywheel runout (Maximum)	0.1 mm (0.004¿n.)

TORQUE SPECIFICATIONS

CL022–01

Pert tightened	N–m	kgf–cm	ft–lbf
Clutch master cylinder x Body	**13**	130	**9**
Clutch line union x Clutch master cylinder	**15**	155	**11**
Clutch release cylinder x Transaxle case	**12**	120	**9**
Flexible hose x Transmission control cable bracket	**23**	235	**17**
Clutch line union x Flexible hose	**20**	200	**14**
Bleeder plug	**11**	**110**	**8**
Transaxle control cable bracket x Clutch release cylinder tube	**15**	115	**11**
Clutch release cylinder tube x Release cylinder body	**15**	115	**11**
Heat insulator x Release cylinder body	**12**	120	**9**
Engine front mounting bracket x Transaxle case	**77**	790	**57**
Release fork support x Transaxle case	**47**	480	**35**
Clutch cover x Flywheel	**19**	195	**14**

TROUBLESHOOTING

You will find the cause of trouble more easily properly using the table shown below, In this table, the numbers indicate the priority of the probable cause of trouble. Check each part in the order shown. If necessary, repair or replace the part.

See Page / Parts Name / Trouble	Clutch pedal (Freeplay out of adjustment)	Clutch line (Air in line)	Master cylinder cup (Damaged)	Release cylinder cup (Damaged)	Engine mounting (Loosen)	Release bearing (Worn, dirty or damaged)	Input shaft bearing (Worn of damaged)	Clutch disc (Out of true)	Clutch disc (Runout is excessive)	Clutch disc (Lining broken)	Clutch disc (Dirty or burred)	Clutch disc (Oily)	Clutch disc (Worn out)	Clutch disc torsion rubber (Damaged)	Clutch disc (Harden)	Clutch disc (Lack of spline grease)	Diaphragm spring (Damaged)	Diaphragm spring (Out of tip alignment)	Pressure plate (Distortion)	Flywheel (Distortion)
See Page	CL–7	CL–6	CL–9	CL–12	–	CL–16	–	CL–16	CL–16	CL–16	CL–16	CL–16	CL–16	CL–16	CL–16	CL–18	CL–16	CL–18	CL–16	–
Clutch grabs/chatters					1				2			2	2	2	2			2		
Clutch pedal spongy		1	2	2																
Clutch noisy						1	2							3						
Clutch slips	1											2	2				3		4	5
Clutch does not disengage	1	2	3	4			5	6	6	6	6	6				6	7	7	8	

V00004

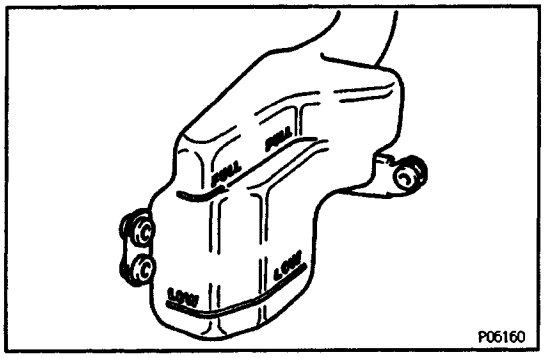

COOLANT CHECK

1. CHECK ENGINE COOLANT LEVEL AT RESERVOIR TANK

The engine coolant level should be between the ” LOW” and ”FULL” lines.

If low, check for leaks and add engine coolant up to the ”FULL” line.

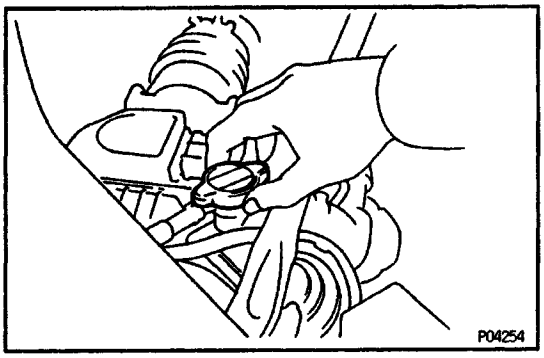

2. CHECK ENGINE COOLANT QUALITY

(a) Remove the radiator (water filler) cap.

CAUTION: To avoid the danger of being burned, do not remove it while the engine and radiator are still hot, as fluid and steam can be blown out under pressure.

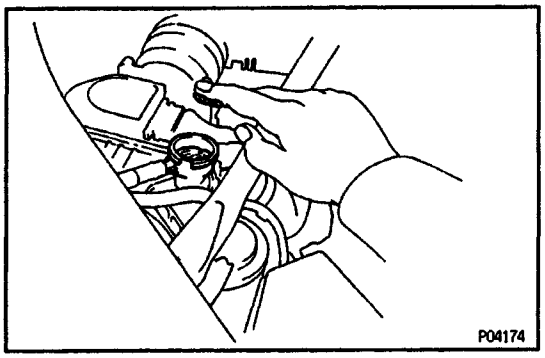

(b) There should not be any excessive deposits of rust or scales around the radiator cap or radiator filler hole, and the coolant should be free from oil.

If excessively dirty, replace the coolant.

(c) Reinstall the radiator (water filler) cap.

COOLANT REPLACEMENT

NOTICE: EG0ZB–01

- **To avoid the danger of burns, do not begin work until the engine and coolant have properly cooled down.**
- **To ensure that coolant is poured in properly, perform the operation at a level area. Performing work with the vehicle inclined may cause improper removal of coolant or improper air removal when pouring coolant.**
- **After replacing the coolant, check the water level in the water filler and reservoir tank once or twice within 500 km (311 miles) of driving or within one week.**

EG0ZC–01

COOLANT CIRCUIT

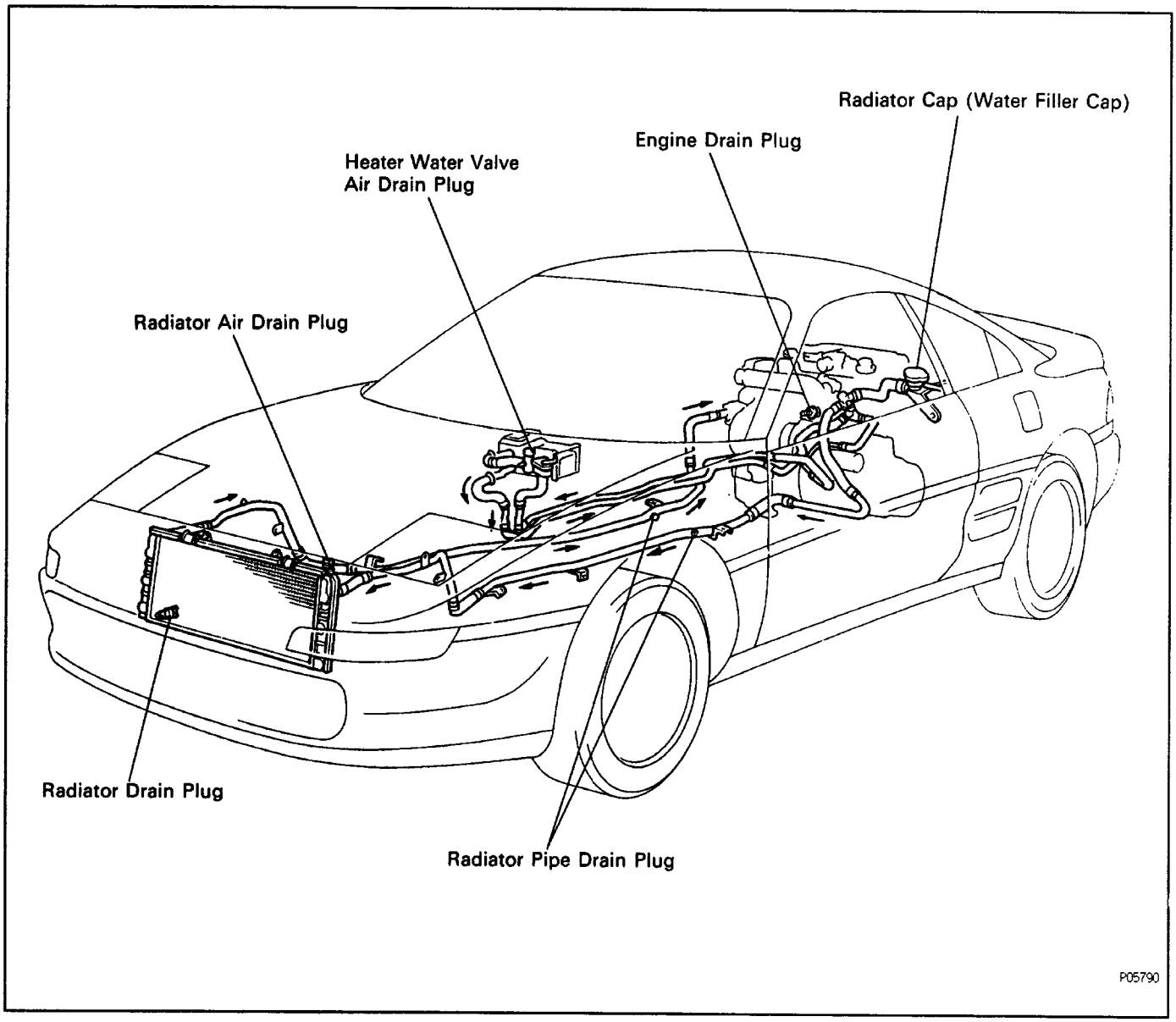

EG06W–03

ENGINE COOLANT DRAINAGE

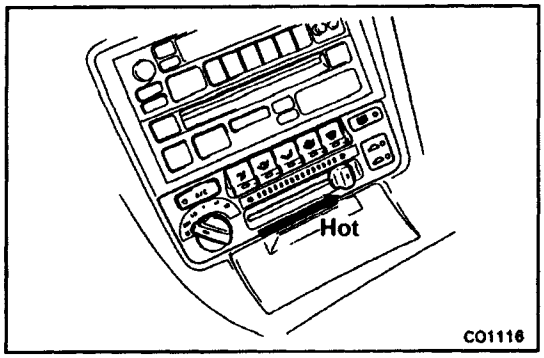

1. REMOVE REAR FUEL TANK PROTECTOR

2. DRAIN ENGINE COOLANT

(a) Set the heater control lever to hot.

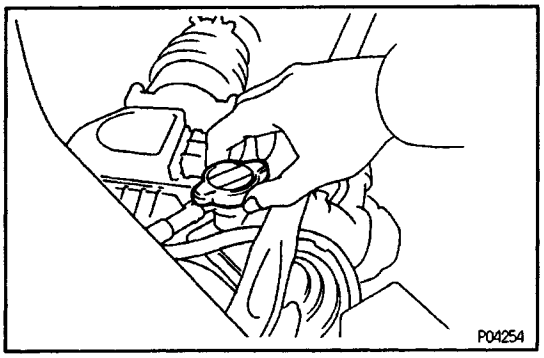

(b) Remove the radiator cap.

CAUTION: To avoid the danger of being burned, do not remove it while the engine and radiator are still hot, as fluid and steam can be blown out under pressure.

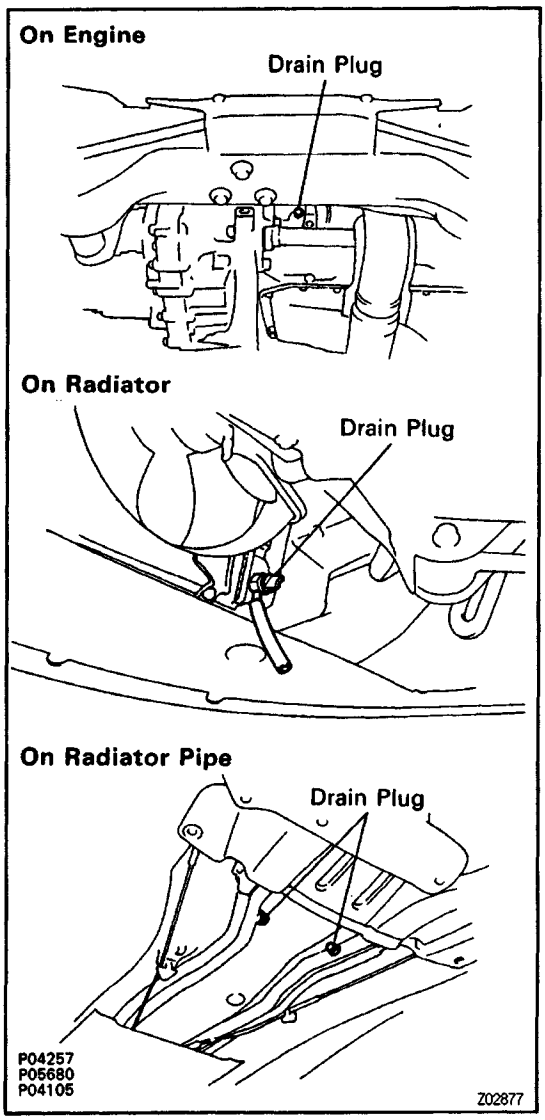

(c) Remove the drain cocks (engine, radiator and radiator pipes), and drain the coolant.

(d) Close the drain plugs.

Torque:

25 N–m (250 kgf–cm, 18 ft–lbf) for engine

17 N–m (170 kgf–cm, 12 ft–lbf) for radiator pipes

EG0ZD–01

ENGINE COOLANT REFILL

1. REMOVE SPARE TIRE

2. REMOVE DASH PANEL FRONT TRIM COVER

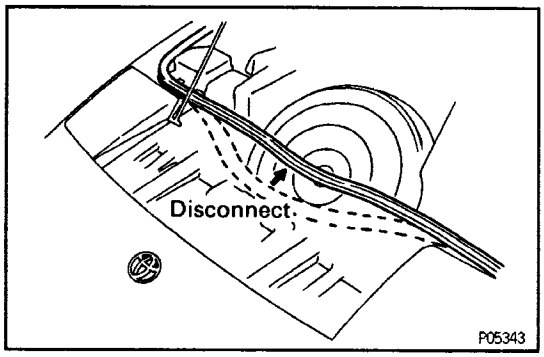

3. REMOVE UPPER RADIATOR SUPPORT SEAL

(a) Disconnect the hood weatherstrip.

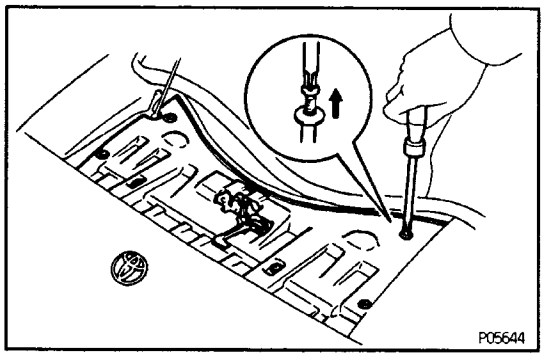

(b) Remove the seven clips.

(c) Remove the two hood lock mounting bolts, and remove the support seal.

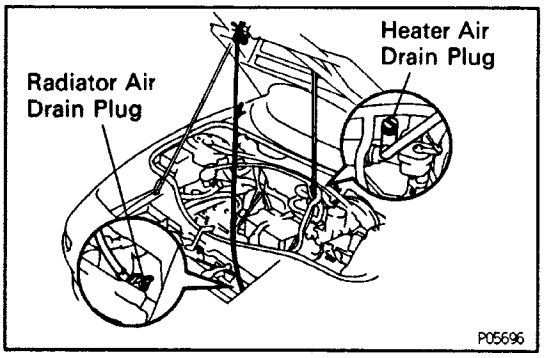

4. SET SERVICE HOSES

(a) Connect the service hoses to the air drain plugs of the radiator and heater water valve.

(b) Suspend the opposite ends the front hood as shown in the illustration.

NOTICE: Do not close–off or pinch any of the service hoses.

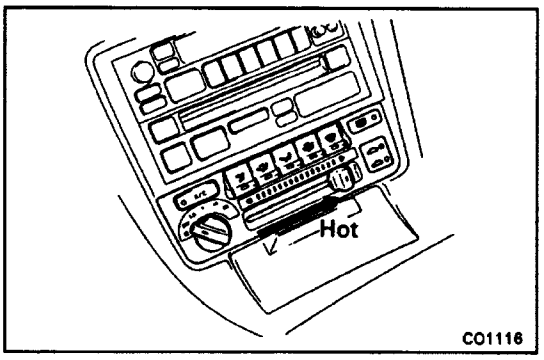

5. FILL ENGINE COOLANT

(a) Set the heater control lever to hot.

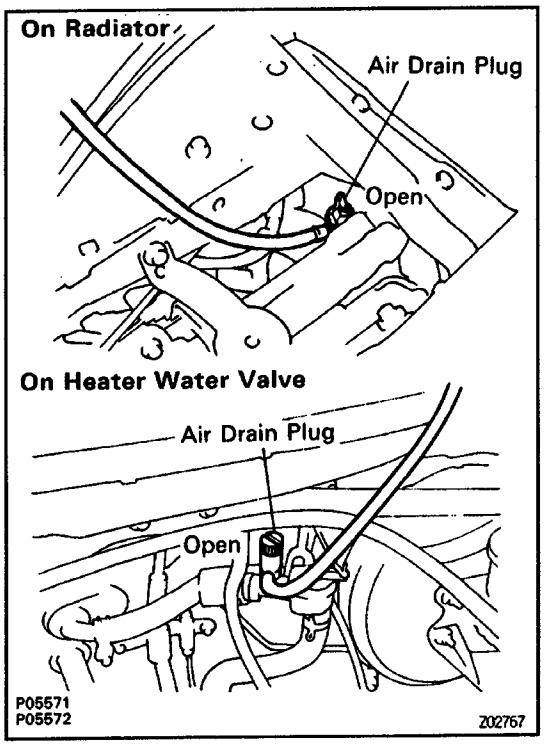

(b) Open the air drain plugs of the radiator or heater water valve above three turns.

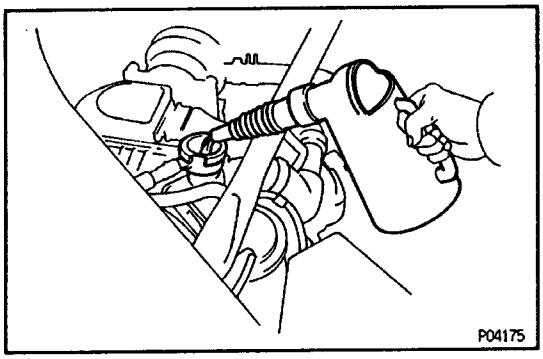

(c) Slowly fill the system with coolant.

Use a good brand of ethylene–glycol base coo–lant and mix it according to the manufacturer's directions.

Using coolant which includes more than 50% ethylene–glycol (but not more than 70%) is recommended.

NOTICE:

- **Do not use a alcohol type coolant.**
- **The coolant should be mixed with demineralized water or distilled water.**

Capacity (w/ Heater):

13.6 liters (14.4 US qts. 12.0 Imp.qts)

(d) Check that air is absent from the air drain plugs of the radiator and heater water valve while filling the water filler inlet to the top with coolant.

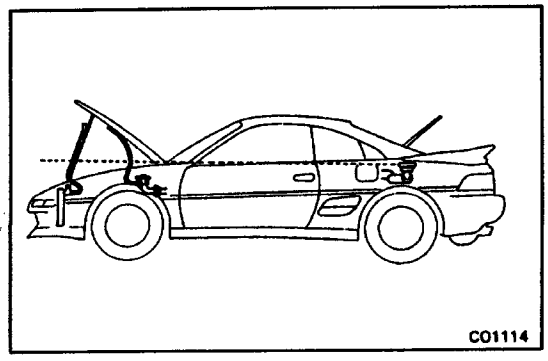

(e) Visually check that the level of coolant in the air drain service hoses of the radiator and heater water valve are the same as in the water filler.

NOTICE: If the water level of coolant in the air drain service hose is clearly, air removal has been incomplete, so check if the service hose is crushed or bent, them perform step (c).

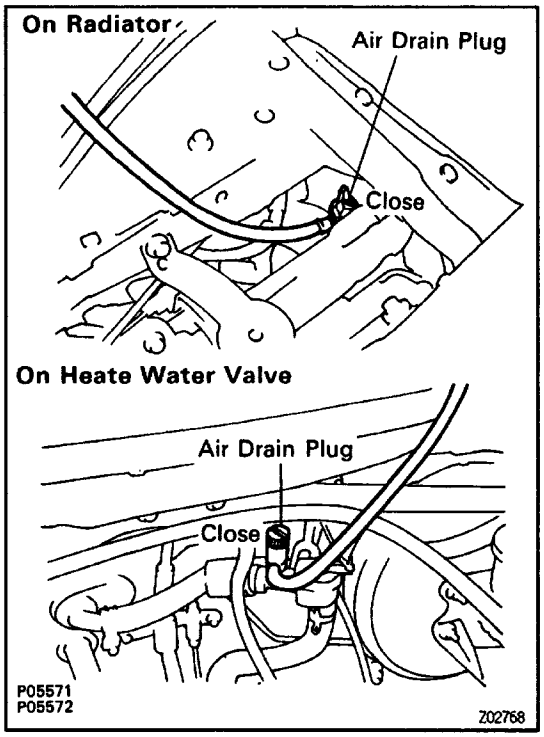

(f) When the coolant level in the air drain service hoses stops dropping, close the air drain plugs of the radi–ator and heater water valve.

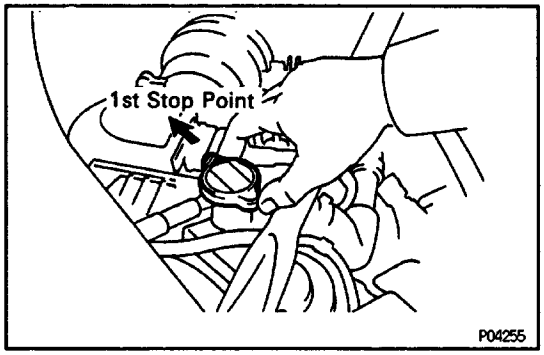

(g) Fasten the radiator (water filler) cap to the 1 st stop point.
NOTICE: Do not tighten the radiator cap completely (to the 2nd stop point).

(h) Start the engine, and run at idle for approx. 3 minutes, and stop the engine.

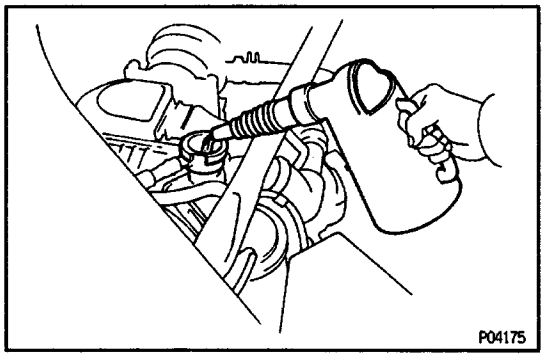

(i) Add more coolant, and repeat steps (h) and (i).
HINT: By performing steps (h) and (i), 0.2 – 0.5 liters (0.2 – 0.5 US qts, 0.2 – 0.4 Imp. qts) can normally be added.

(j) Check that coolant level in the water filler has not dropped.
If the coolant level has dropped, add coolant and repeat the steps from (g) onward.

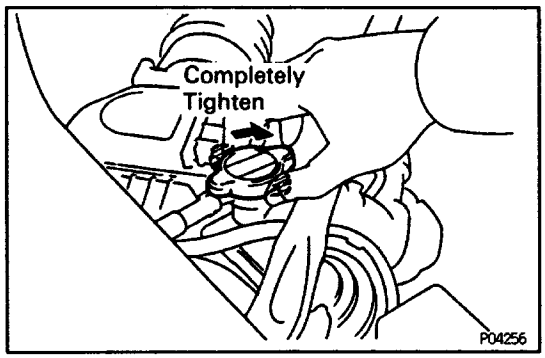

(k) Completely tighten the radiator (water filler) cap.

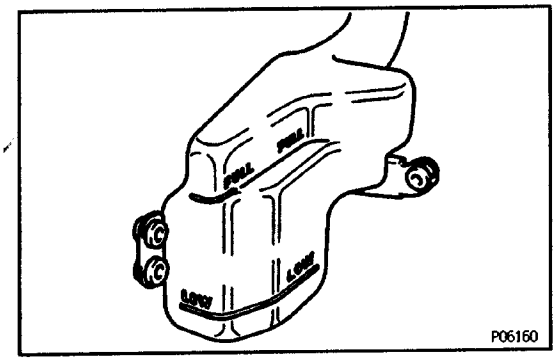

(l) Fill coolant into the reservoir tank up to the ”FULL” line.
(m) Check coolant for leaks.

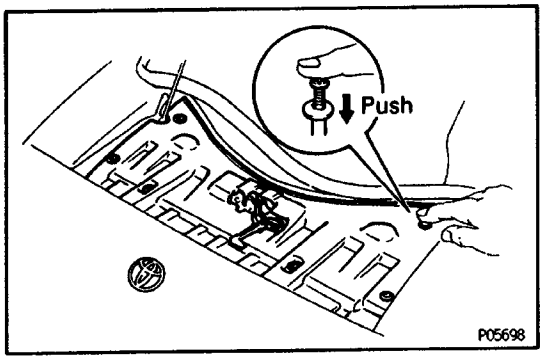

6. REINSTALL UPPER RADIATOR SUPPORT SEAL
(a) Temporarily install the hood lock with the RH side bolt.
(b) Place the support seal in position.
(c) Install the hood lock with the two bolts.
(d) Install the seven clips.

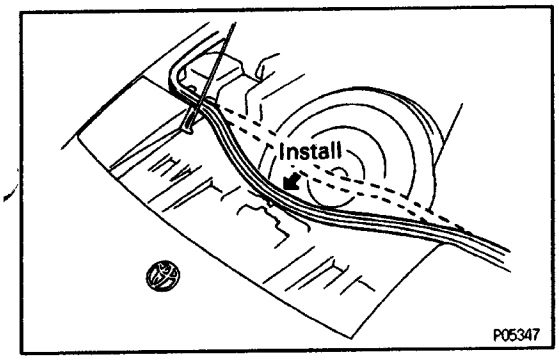

(e) install the hood weatherstrip.

7. REINSTALL SPARE TIRE
8. REINSTALL DASH PANEL FRONT TRIM COVER
9. REINSTALL REAR FUEL TANK PROTECTOR

COOLING SYSTEM

DESCRIPTION

This engine utilizes a pressurized forced circulation cooling system which includes a thermostat equipped with a by–pass valve mounted on the inlet side.

OPERATION

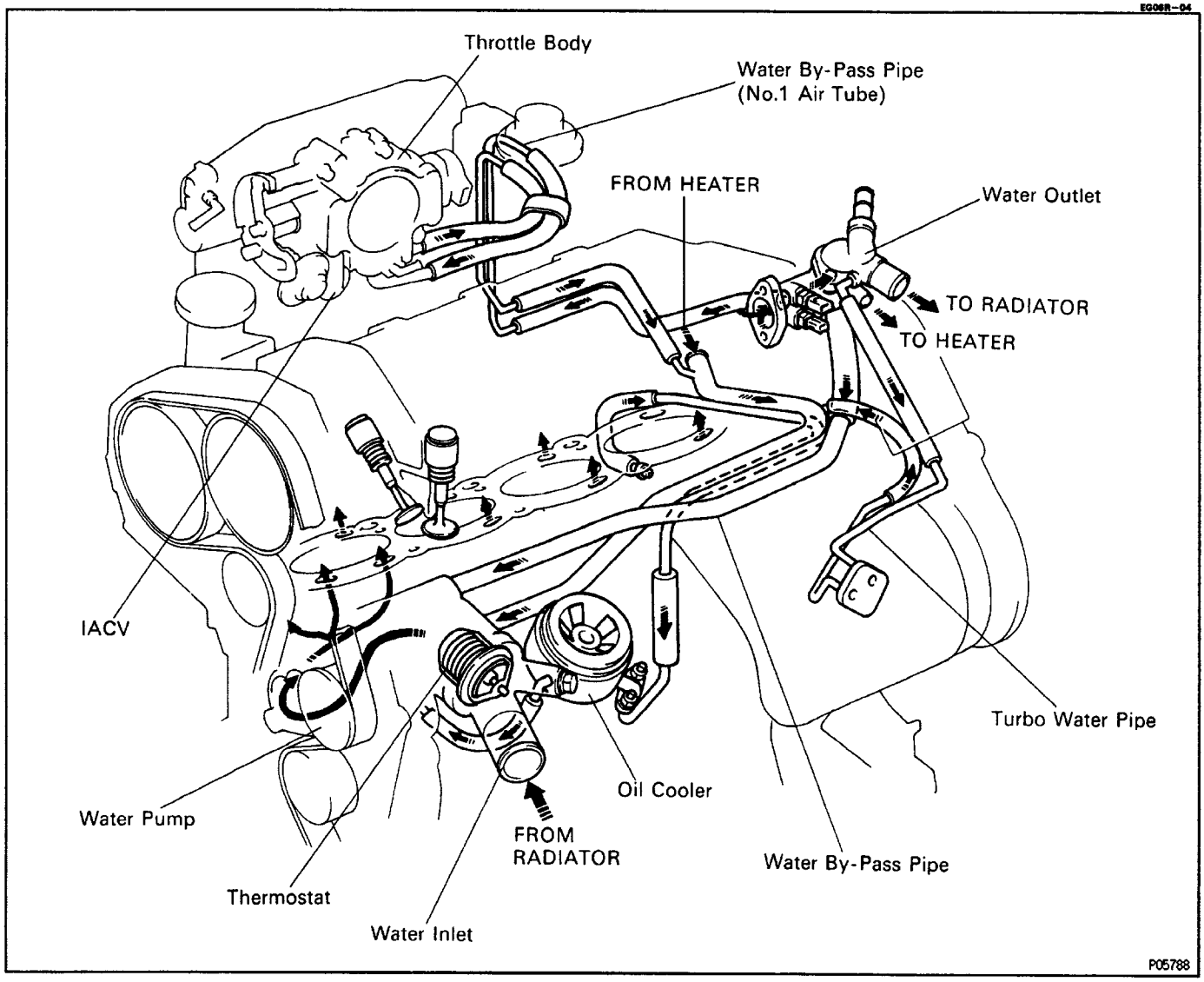

The cooling system is composed of the water jacket (inside the cylinder block and cylinder head), radiator, water pump, thermostat, electric fan, hoses and other components.

Coolant which is heated in the water jacket is pumped to the radiator, through which and electric fan blows air to cool the coolant as it passes through. Coolant which has been cooled is then sent back to the engine by the water pump, where it cools the engine.

The water jacket is a network of channels in the shell of the cylinder block and cylinder head through which coolant passes. It is designed to provide adequate cooling of the cylinders and combustion chambers which become heated during engine operation.

ENGINE COMPARTMENT ELECTRIC COOLING FAN

EG07B–04

Parts Location

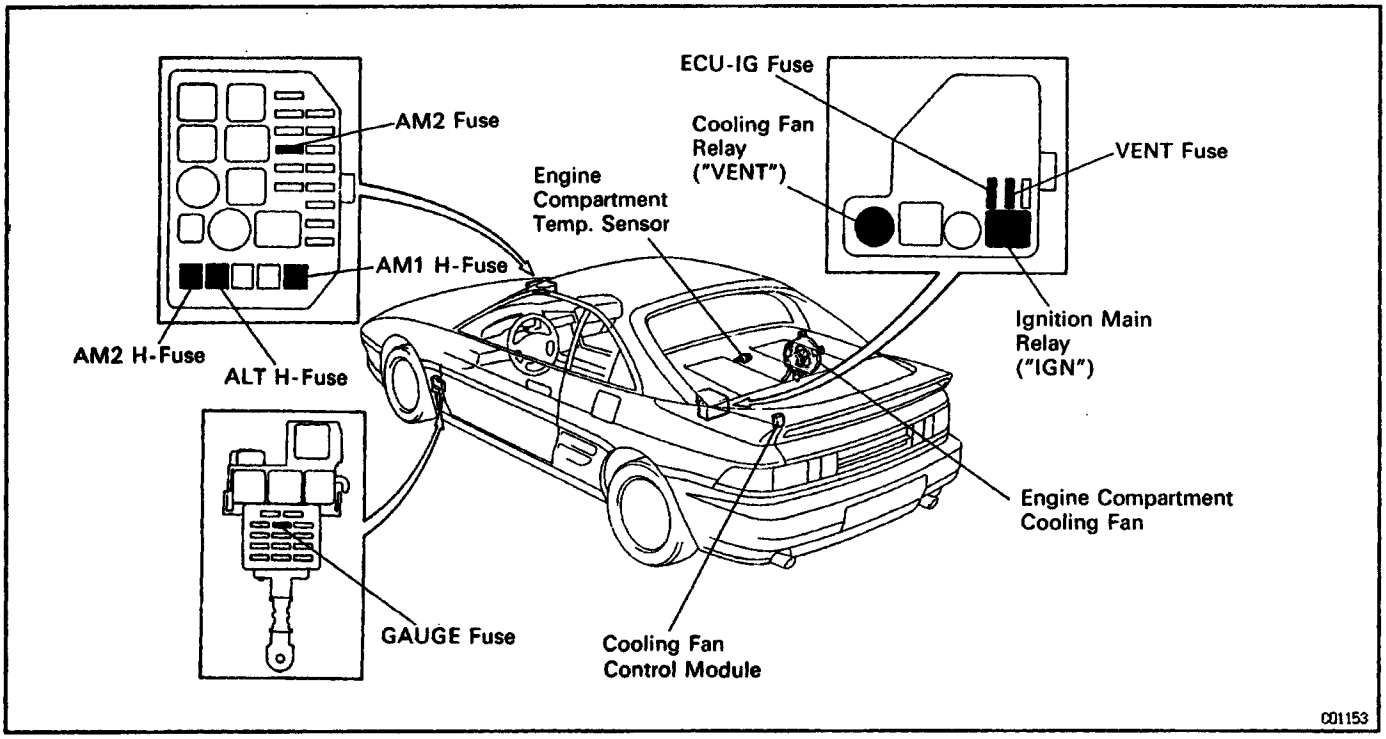

EG07C–04

System Circuit

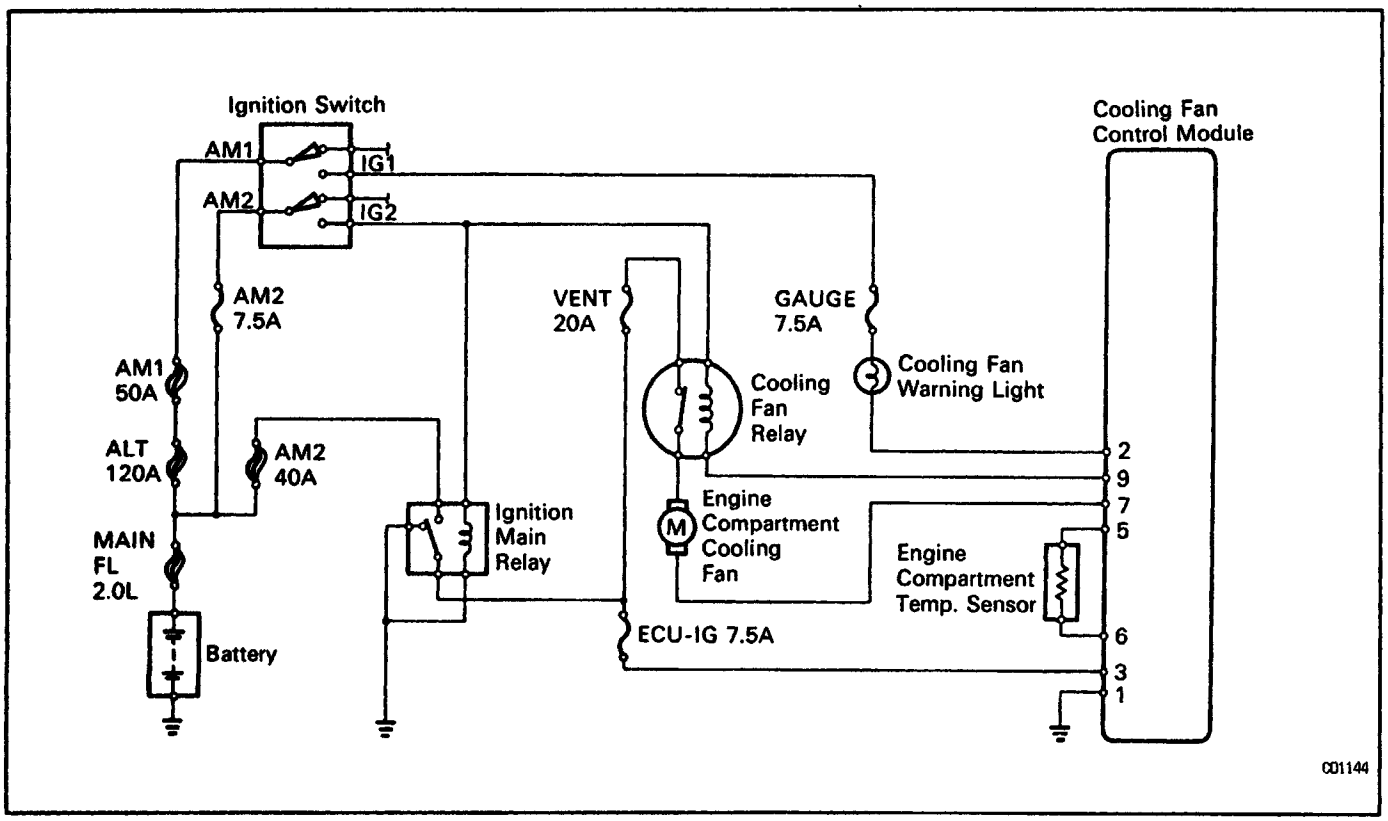

EG10K–01

On–Vehicle Inspection

1. CHECK COOLING FAN OPERATION WITH LOW TEMPERATURE (Below 45.5°C (113.9* F))

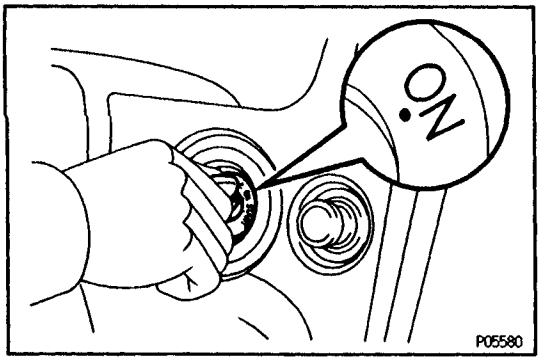

(a) Turn the ignition switch ON.

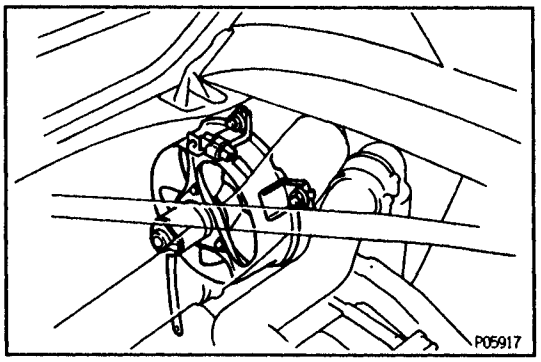

(b) Check that the cooling fan stops.

If not, check the cooling fan relay and engine coolant temperature switch, and check for a separated con–nector or severed wire between the cooling fan relay and engine compartment temperature sensor.

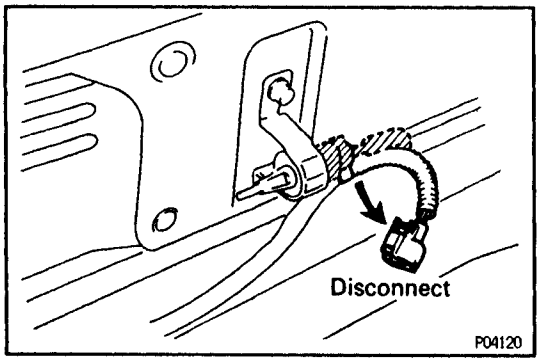

(c) Disconnect the engine compartment temperature sensor.

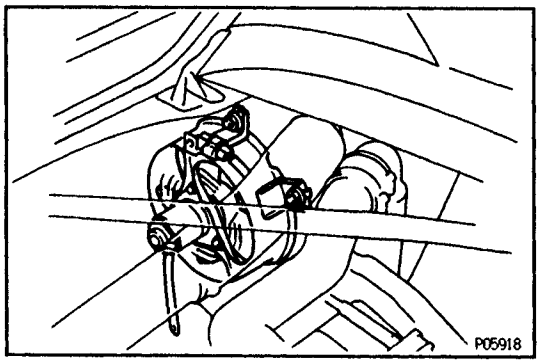

(d) Check that the cooling fan rotates.

If not, check the fan main relay, cooling fan relay, fan control module, cooling fan, fuses, and check for short circuit between the cooling fan relay and engine compartment temperature sensor.

(e) Turn the ignition switch OFF.

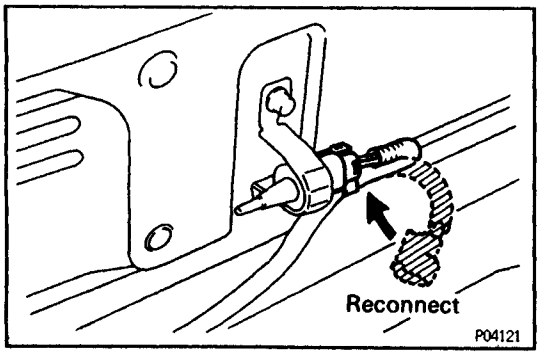

(f) Reconnect the engine compartment temperature sensor.

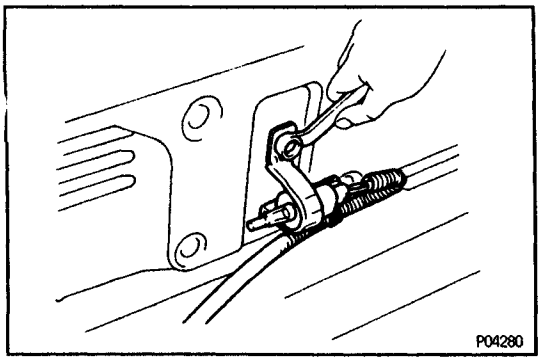

2. CHECK COOLING FAN OPERATION WITH HIGH TEMPERATURE (Above62.5˚C (144.5˚F))

(a) Remove the two bolts, and disconnect the engine compartment temperature sensor from the engine hood.

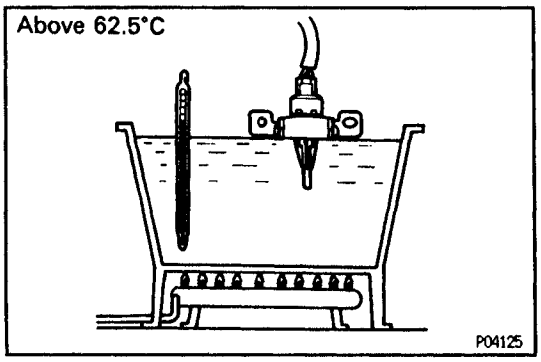

(b) Heat the engine compartment temperature sensor to above 6 2.5˚C (144.5˚F).

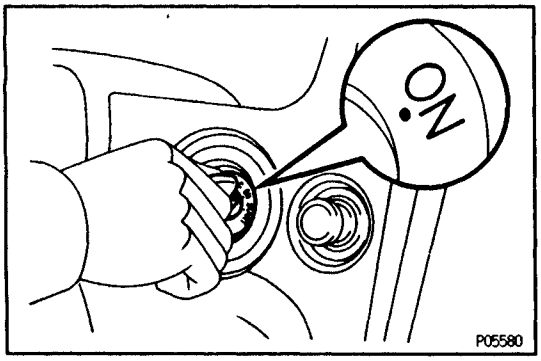

(c) Turn the ignition switch ON.

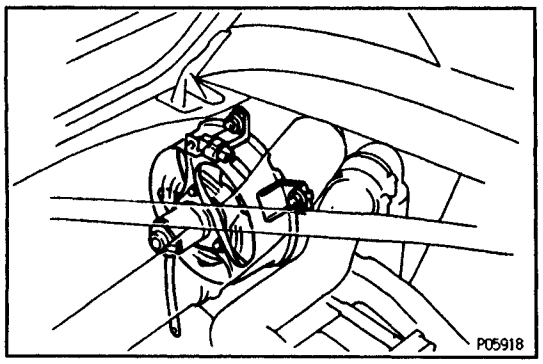

(d) Check that the cooling fan rotates.
If not, replace the engine compartment temperature switch.

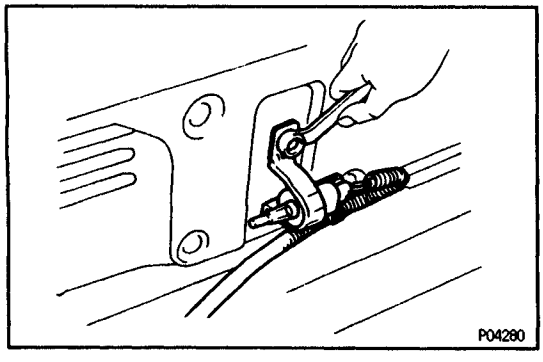

(e) Reinstall the engine compartment temperature sensor with the two bolts.

EG07S–05

Cooling Fan
COMPONENTS FOR REMOVAL AND INSTALLATION

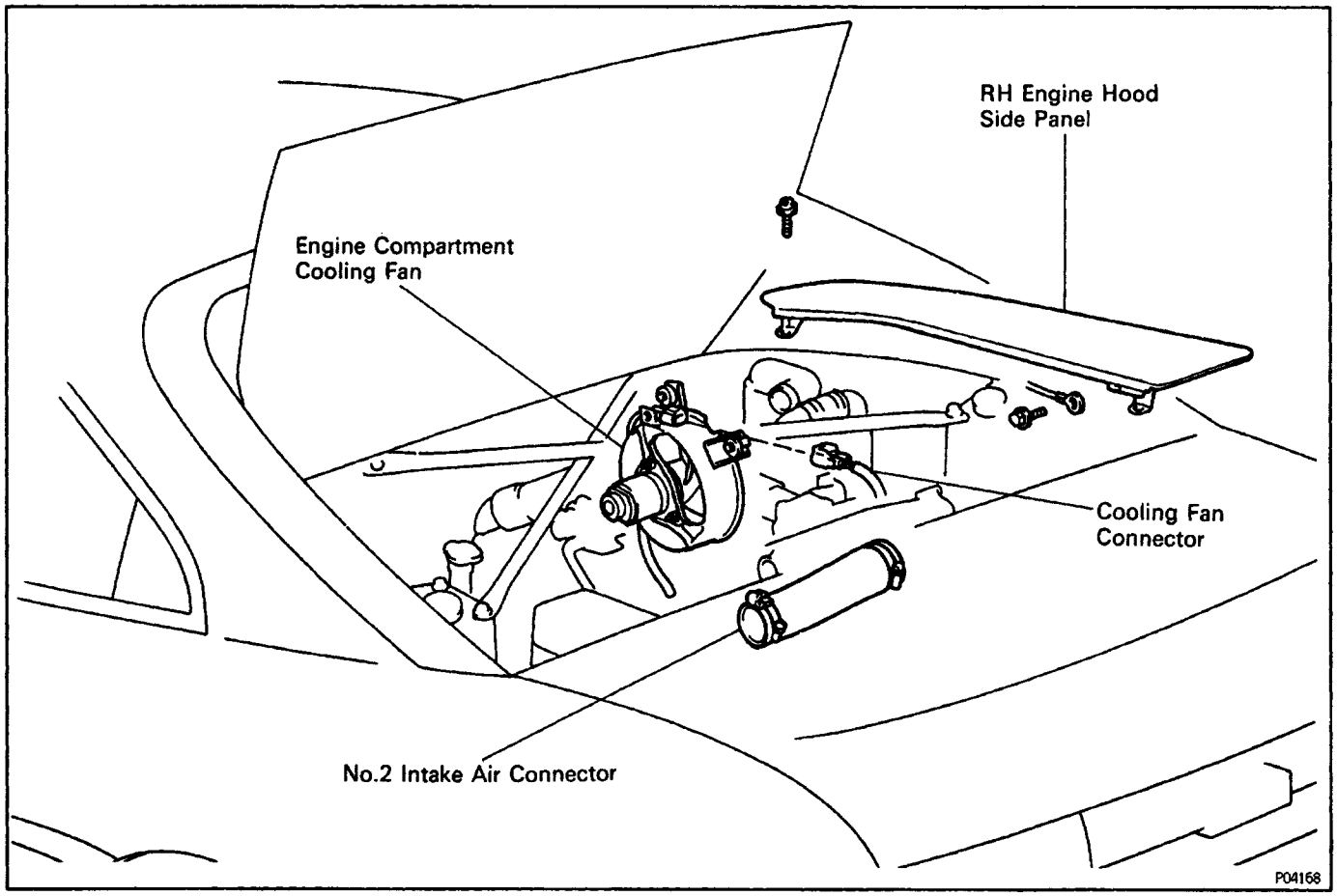

EG10L–01

COOLING FAN INSPECTION

1. DISCONNECT CABLE FROM NEGATIVE TERMINAL OF BATTERY

CAUTION: Turn the Ignition switch to "LOCK". Disconnect the cable from the negative terminal of the battery. Wait at least 20 seconds before proceeding with work.

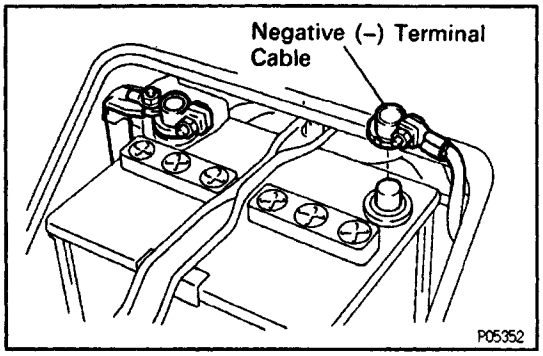

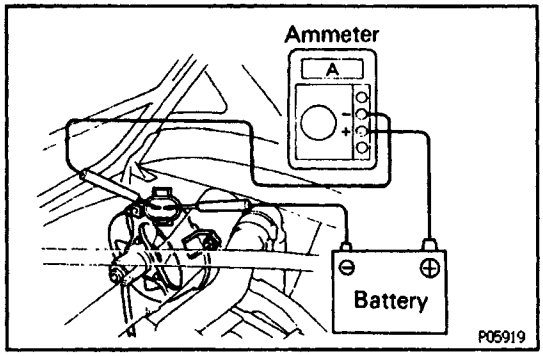

2. INSPECT COOLING FAN

(a) Disconnect the cooling fan connector.

(b) Connect battery and ammeter to the cooling fan connector.

(c) Check that the cooling fan rotates smoothly, and check the reading on the ammeter.

Standard amperage:

3.1 – 4.3 A

(d) Reconnect the cooling fan connector.

3. RECONNECT CABLE TO NEGATIVE TERMINAL OF BATTERY

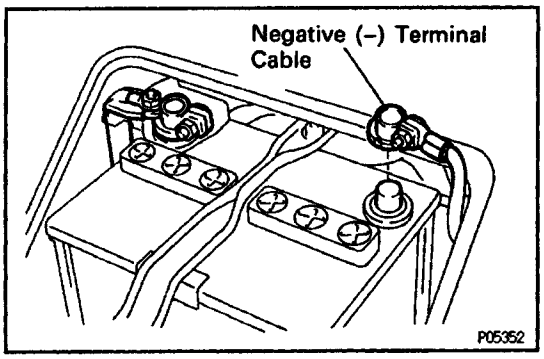

S810M–01

COOLING FAN REMOVAL

(See Components for Removal and Installation)

1. DISCONNECT CABLE FROM NEGATIVE TERMINAL OF BATTERY

CAUTION: Turn the ignition switch to 'LOCK'. Disconnect the cable from the negative terminal of the battery. Wait at least 20 seconds before proceeding with work.

2. REMOVE RH ENGINE HOOD SIDE PANEL

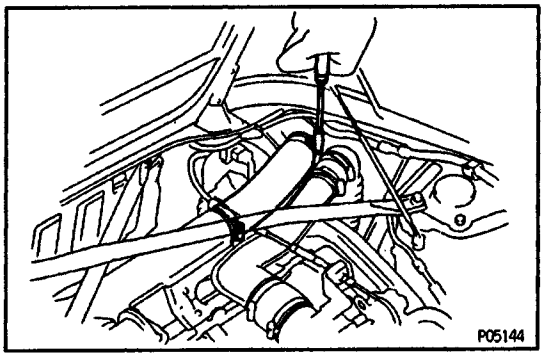

3. REMOVE NO.2 INTAKE AIR CONNECTOR

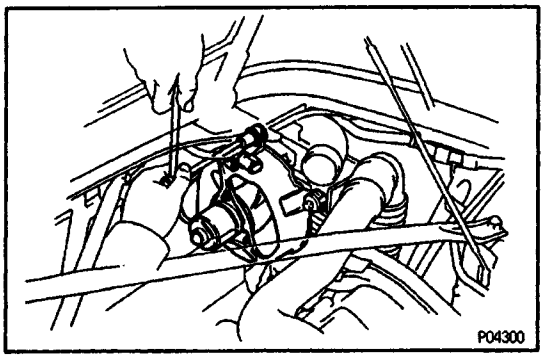

4. REMOVE COOLING FAN

(a) Disconnect the cooling fan connector.

(b) Loosen the three bolts, and remove the cooling fan.

COMPONENTS FOR DISASSEMBLY AND ASSEMBLY

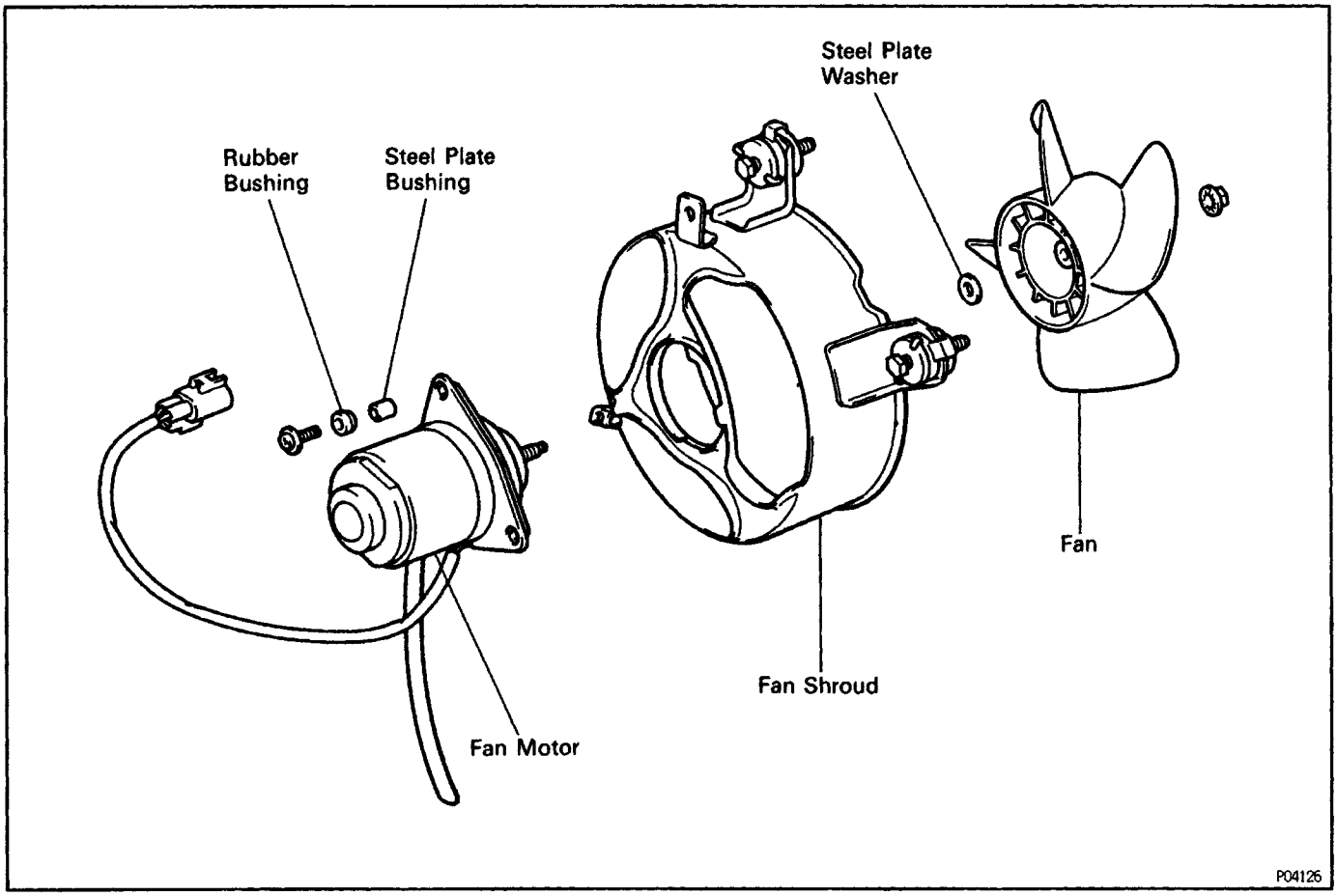

EG10N–01

COOLING FAN DISASSEMBLY

(See Components for Disassembly and Assembly)

1. REMOVE FAN

Remove the nut, fan and steel plate washer.

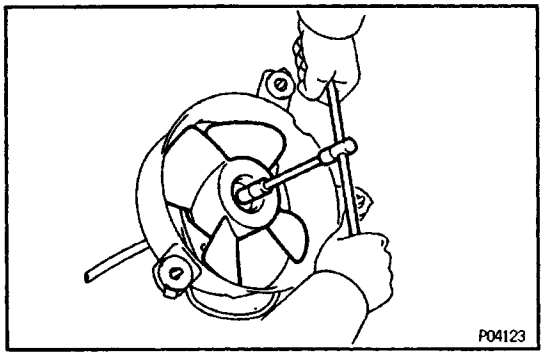

2. REMOVE FAN MOTOR

(a) Disconnect the wire and connector from the fan shroud.

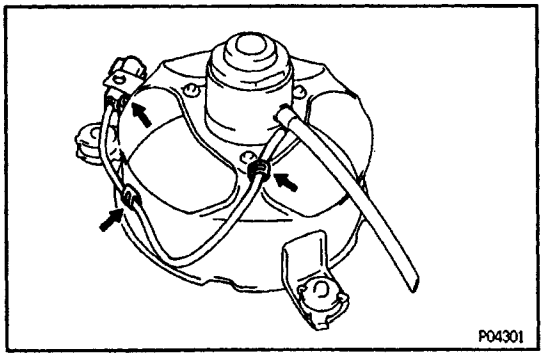

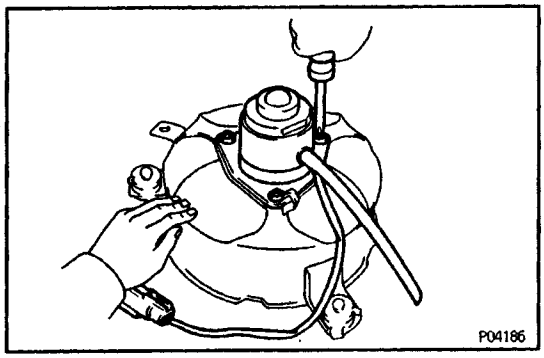

(b) Remove the three screws, rubber bushings, steel plate bushings and motor.

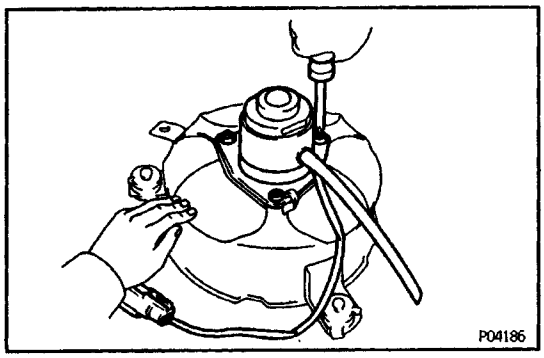

BG10P–01

COOLING FAN ASSEMBLY

(See Components for Disassembly and Assembly)

1. INSTALL FAN MOTOR

(a) Install the fan motor with the three steel plate bush–ings, rubber bushings and screws.

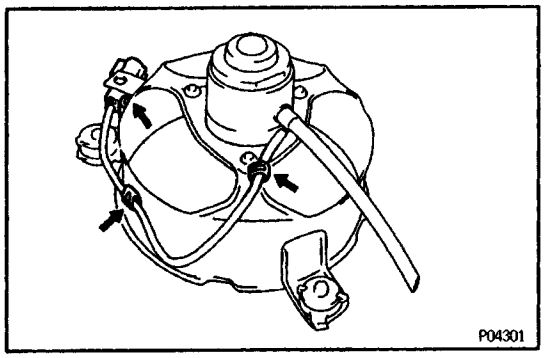

(b) Install the wire and connector to the fan shroud.

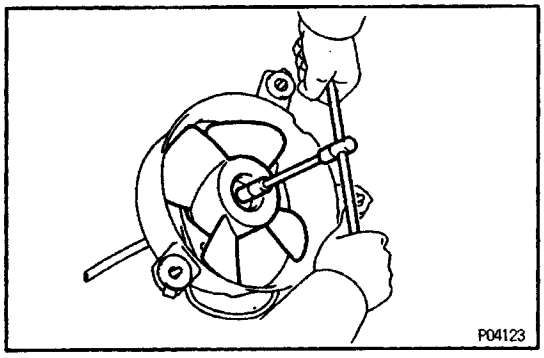

2. INSTALL FAN

Install the fan with the steel plate washer and nut.

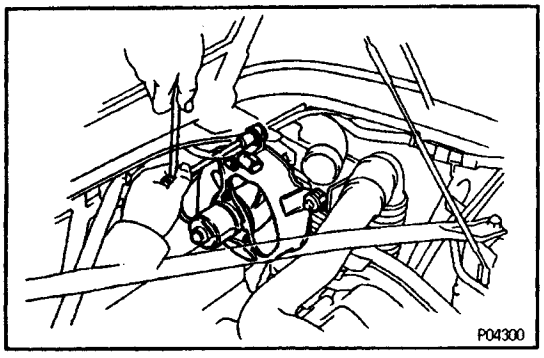

BG10Q–01

COOLING FAN INSTALLATION

(See Components for Disassembly and Assembly)

1. INSTALL COOLING FAN

(a) Install the cooling fan with the three bolts.

(b) Connect the cooling fan connector.

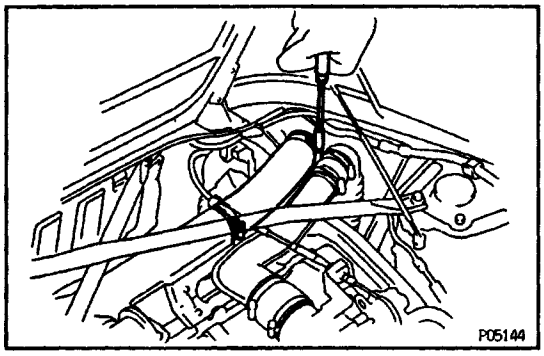

2. INSTALL NO.2 INTAKE AIR CONNECTOR

3. INSTALL RH ENGINE HOOD SIDE PANEL

4. CONNECT CABLE TO NEGATIVE TERMINAL OF BATTERY

SG07S–07

Cooling Fan Control Module
CONTROL MODULE FOR REMOVAL AND INSTALLATION

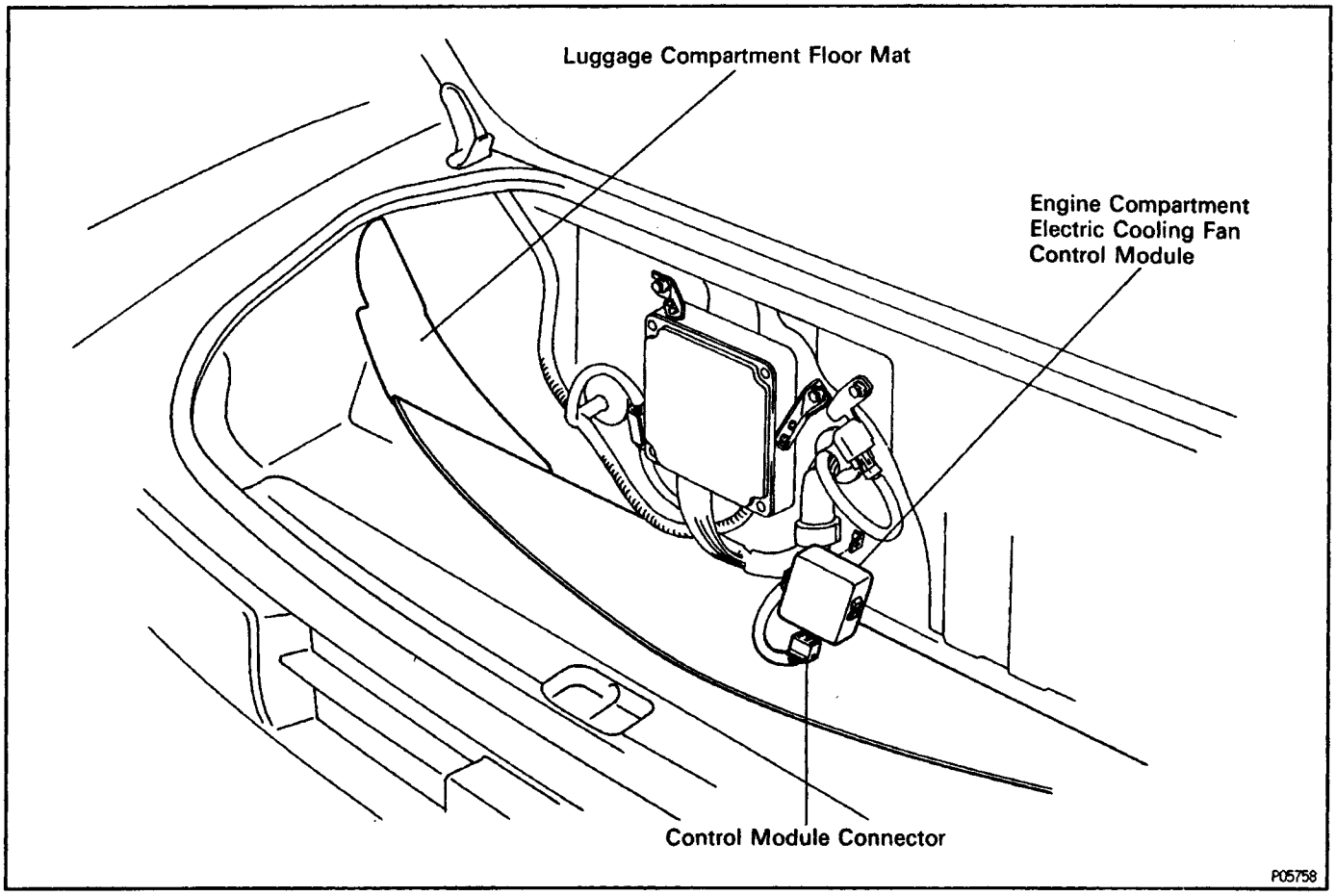

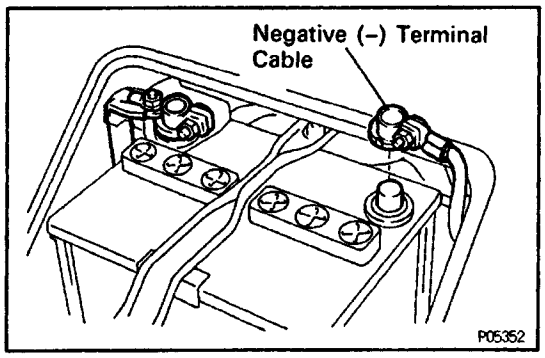

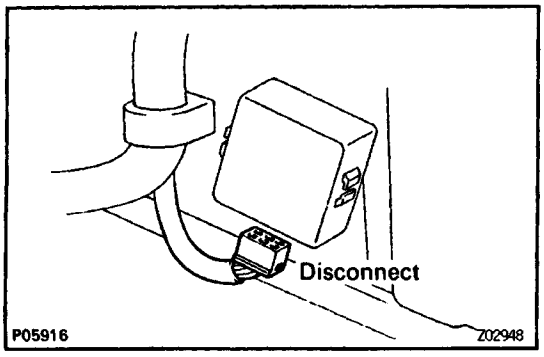

SG10R–01

COOLING FAN CONTROL MODULE INSPECTION

(See Components for Removal and Installation)

1. DISCONNECT CABLE FROM NEGATIVE TERMINAL OF BATTERY

CAUTION: Turn the ignition switch to 'LOCK'. Disconnect the cable from the negative terminal of the battery. Wait at least 20 seconds before proceeding with work.

2. DISCONNECT FRONT SIDE OF LUGGAGE LUGGAGE COMPARTMENT FLOOR MAT FROM PARTITION PANEL

3. INSPECT COOLING FAN CONTROL MODULE

(a) Disconnect the fan control module connector.

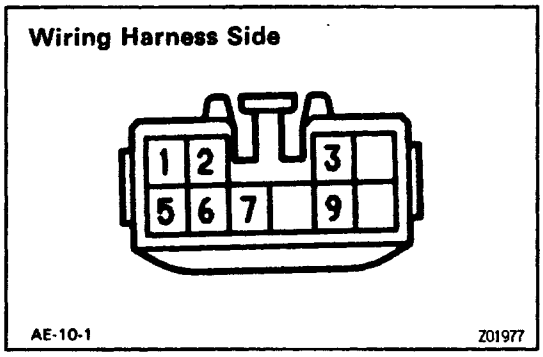

(b) Check the connector on the wiring harness side as shown in the chart.

Check for	Tester connection	Condition		Specified valve
Continuity	1 – Ground	–		Continuity
Voltage	2 – Ground	Ignition switch ON		Battery voltage
Voltage	3 – Ground	Ignition switch ON		Battery voltage
Resistance	5–6	Coolant temp.	20°C (88°F)	Approx. 2.45 kΩ
			57.5°C (135.5°F)	Approx. 0.63 kΩ
			80°C (176°F)	Approx. 0.32 kΩ
Voltage	7 – Ground	Ignition switch ON		Battery voltage
Continuity	9 – Ground	Ignition switch ON		Battery voltage

V00874

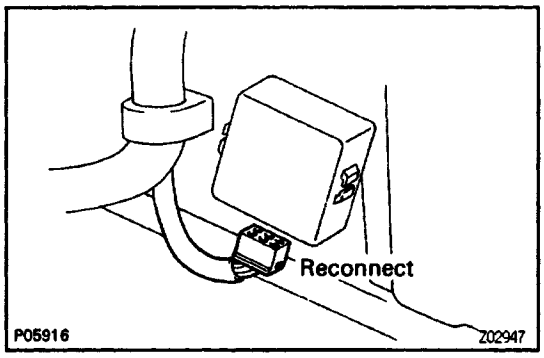

(c) Reconnect the fan control module connector.

4. REINSTALL LUGGAGE COMPARTMENT FLOOR MAT

5. RECONNECT CABLE TO NEGATIVE TERMINAL OF BATTERY

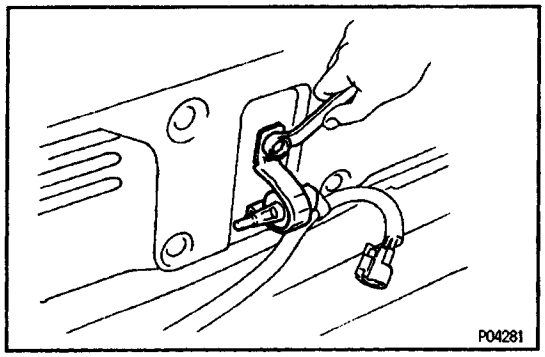

Engine Compartment Temperature Sensor

ENGINE COMPARTMENT TEMPERATURE SENSOR INSPECTION

1. REMOVE ENGINE COMPARTMENT TEMPERATURE SENSOR

(a) Disconnect the sensor connector.

(b) Remove the two bolts and sensor.

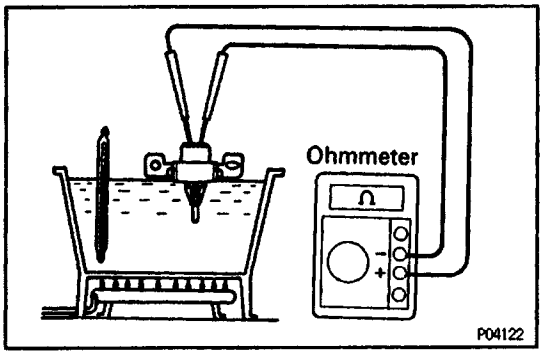

2. INSPECT ENGINE COMPARTMENT TEMPERATURE SENSOR

Using an ohmmeter, measure the resistance between the terminals.

Resistance:

Approx. 2.45 kΩ at 20°C (68°F)

Approx. 0.63 kΩ at 57.5˚C (135.5˚F)

Approx. 0.32 kΩ at 80˚C (176˚ F)

If resistance is not as specified, replace the sensor.

3. REINSTALL ENGINE COMPARTMENT TEMPERATURE SENSOR

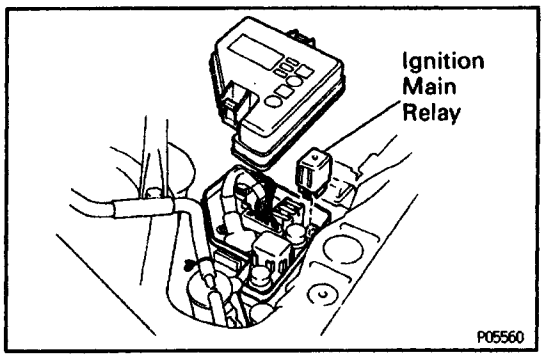

SG10T–01

Ignition Main Relay ('IGN')

IGNITION MAIN RELAY INSPECTION

1. REMOVE IGNITION MAIN RELAY

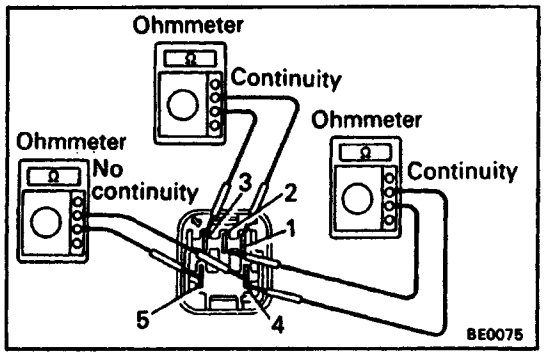

2. INSPECT IGNITION MAIN RELAY

A. Inspect relay continuity

(a) Using an ohmmeter, check that there is continuity between terminals 1 and 3.

(b) Check that there is continuity between terminals 2 and 4.

(c) Check that there is no continuity between terminals 4 and 5.

If continuity is not as specified, replace the relay.

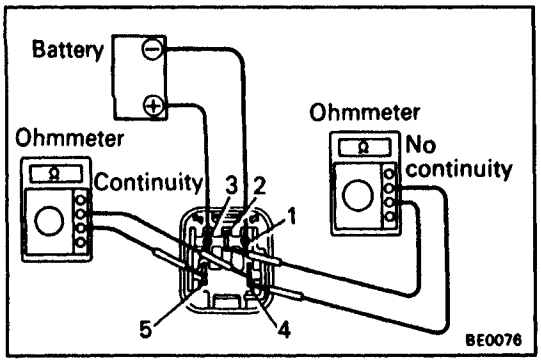

B. Inspect relay operation

(a) Apply battery voltage across terminals 1 and 3.

(b) Using an ohmmeter, check that there is no continuity between terminals 2 and 4.

(c) Check that there is continuity between terminals 4 and 5.

If operation is not as specified, replace the relay.

3. REINSTALL IGNITION MAIN RELAY

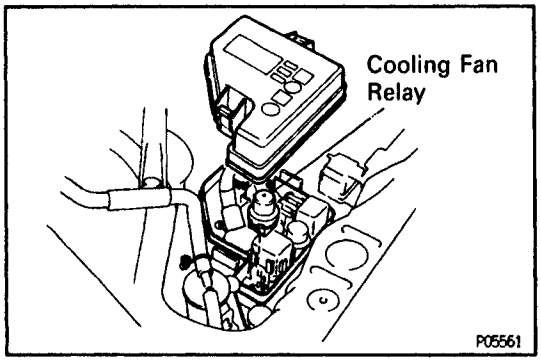

B810U–01

Cooling Fan Relay ('VENT")

COOLING FAN RELAY INSPECTION

1. REMOVE COOLING FAN RELAY

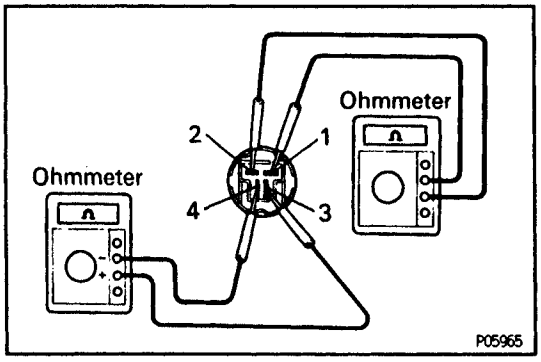

2. INSPECT COOLING FAN RELAY

A. Inspect relay continuity

(a) Using an ohmmeter, check that there is continuity between terminals 1 and 2.

(b) Check that there is continuity between terminals 3 and 4.

If continuity is not as specified, replace the relay.

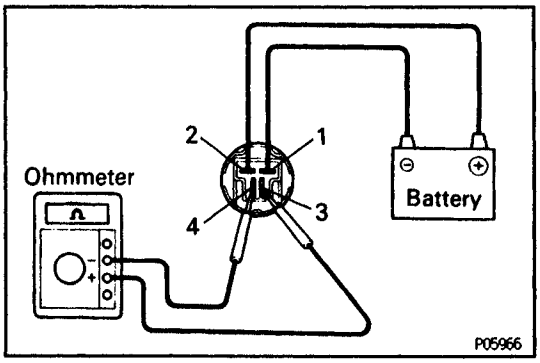

B. Inspect relay operation

(a) Apply battery voltage across terminals 1 and 2.

(b) Using an ohmmeter, check that there is no continuity between terminals 3 and 4.

If operation is not as specified, replace the relay.

3. REINSTALL COOLING FAN RELAY

COOLING SYSTEM

DESCRIPTION

This engine utilizes a pressurized forced circulation cooling system which includes a thermostat equipped with a by–pass valve mounted on the inlet side.

OPERATION

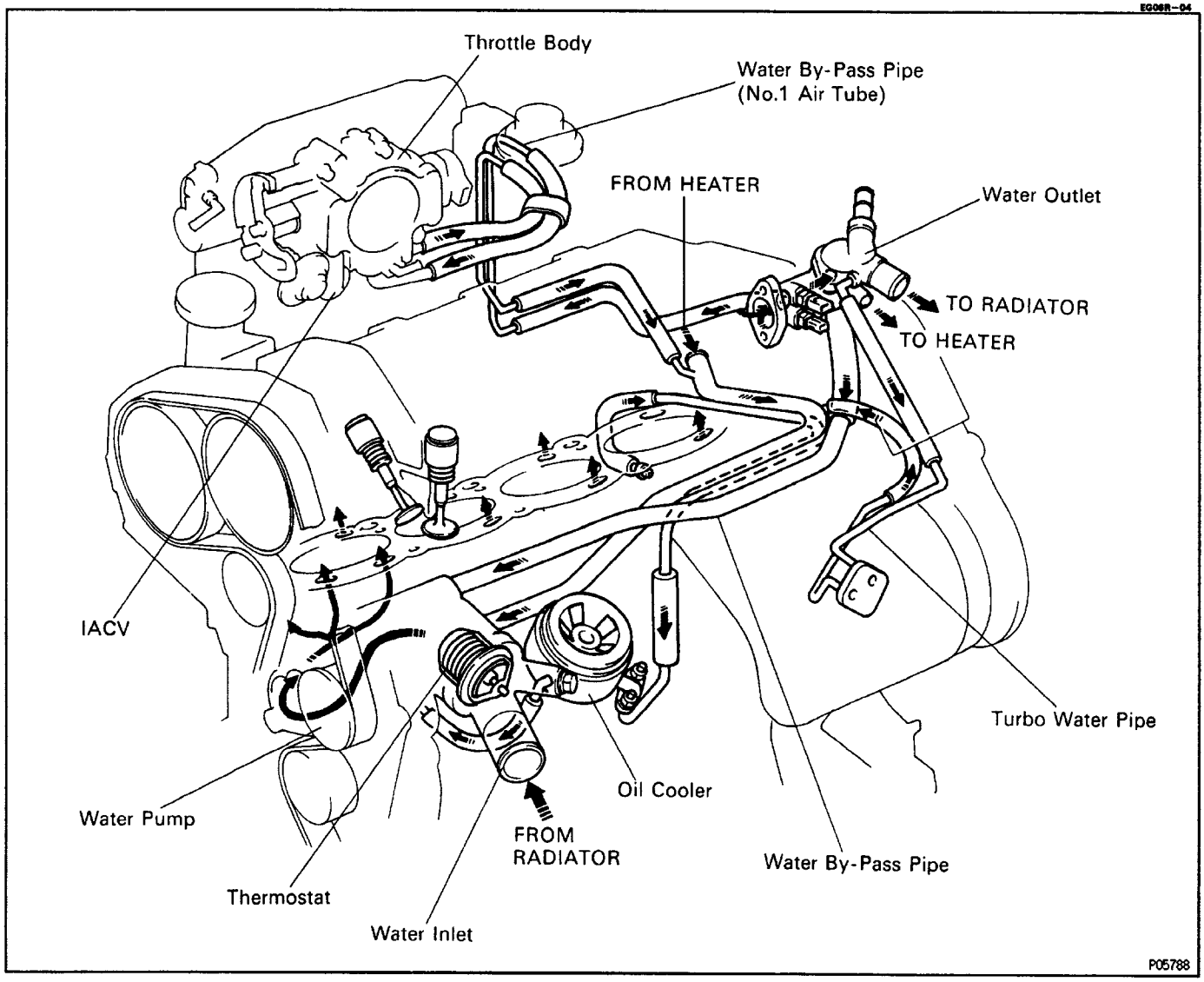

The cooling system is composed of the water jacket (inside the cylinder block and cylinder head), radiator, water pump, thermostat, electric fan, hoses and other components.

Coolant which is heated in the water jacket is pumped to the radiator, through which and electric fan blows air to cool the coolant as it passes through. Coolant which has been cooled is then sent back to the engine by the water pump, where it cools the engine.

The water jacket is a network of channels in the shell of the cylinder block and cylinder head through which coolant passes. It is designed to provide adequate cooling of the cylinders and combustion chambers which become heated during engine operation.

RADIATOR

The radiator cools the coolant which has passed through the water jacket and become hot, and it is mounted in the front of the vehicle. The MR2 radiator is different from that in other models, in that it is a cross flow type in which the coolant flows horizontally. It includes side tanks and a core which connects them. The inlet for coolant from the water jacket and the drain cock for draining out coolant are located in the left tank. The outlet coolant and an air drain, which facilitates the supply of coolant to the engine are located in the right tank. The core contains many tubes through which coolant flows from left tank to the right tank as well as cooling fins which radiate heat away from the coolant in the tubes. Air sucked in by the electric cooling fan, as well as the wind generated by the vehicle's travel, passes through the radiator, cooling the coolant heated by the water jacket as it passes through the tubes in the core. Models with automatic transmission include an automatic transmission. fluid cooler incorporated into the cooling pipes. A fan with an electric motor is mounted behind the radiator to assist the flow of air through the radiator. The fan operates when the coolant temperature becomes high in order to prevent it from becoming too high.

RADIATOR CAP

The radiator cap is a pressure type cap which seals the radiator, resulting in pressurization of the radiator as the coolant expands. The pressurization prevents the coolant from boiling even when the coolant temperature exceeds 100˚C (212˚F). A relief valve (pressurization valve) and a vacuum valve (negative pressure valve) are built into the radiator cap. The relief valve opens and lets steam escape through the overflow pipe when the pressure generated inside the cooling system exceeds the limit (coolant temperature: 110 – 120˚C (230 – 248˚F), pressure; 59 – 103 kPa (0.60 – 1.05 kgf/cm^2, 8.5 – 14.9 psi). The vacuum valve opens to alleviate the vacuum which develops in the coolant system after the engine is stopped and the coolant temperature drops. The valve's opening allows the coolant in the reservoir tank to return to the cooling system.

RESERVOIR TANK

The reservoir tank is used to catch coolant which overflows the cooling system as a result of volumetric expansion when the coolant is heated. The coolant in the reservoir tank returns to the radiator when the coolant temperature drops, thus keeping the radiator full at all times and avoiding needless coolant loss.

Check the reservoir tank level to learn if the coolant needs to be replenished.

WATER PUMP

The water pump is used for forced circulation of coolant through the cooling system. It is mounted on the front of the cylinder block and driven by a timing belt.

THERMOSTAT

The thermostat has a wax type by–pass valve and is mounted in the water inlet housing. The thermostat includes a type of automatic valve operated by fluctuations in the coolant tempera–ture. This valve closes when the coolant temperature drops, preventing the circulation of coolant through the engine and thus permitting the engine to warm up rapidly. The valve opens when the coolant temperature has risen, allowing the circulation of coolant. Wax inside the thermostat. expands when heated and contracts when cooled. Heating the wax thus generates pressure which overpowers the force of the spring which keeps the valve closed, thus opening the valve. When the wax cools, its contraction causes the force of the spring to take effect once more, closing the valve. The thermostat in this engine operates at a temperature of 82˚C (180˚F).

PREPARATION

SST (SPECIAL SERVICE TOOLS)

EG06S–02

 09228–06500 Oil Filter Wrench	

RECOMMENDED TOOLS

EG06T–01

 09082–00015 TOYOTA Electrical Tester	

EQUIPMENT

EG06U–03

Heater	
Radiator cap tester	
Thermometer	
Torque wrench	

COOLANT

EG06V–03

Item	Capacity	Classification
Engine coolant (w/ Heater)	13.6 liters (14.4 US qts, 12.0 Imp. qts)	Ethylene–glycol base

RADIATOR ELECTRIC COOLING FAN (WITHOUT AC)

EG07B–03

Part Location

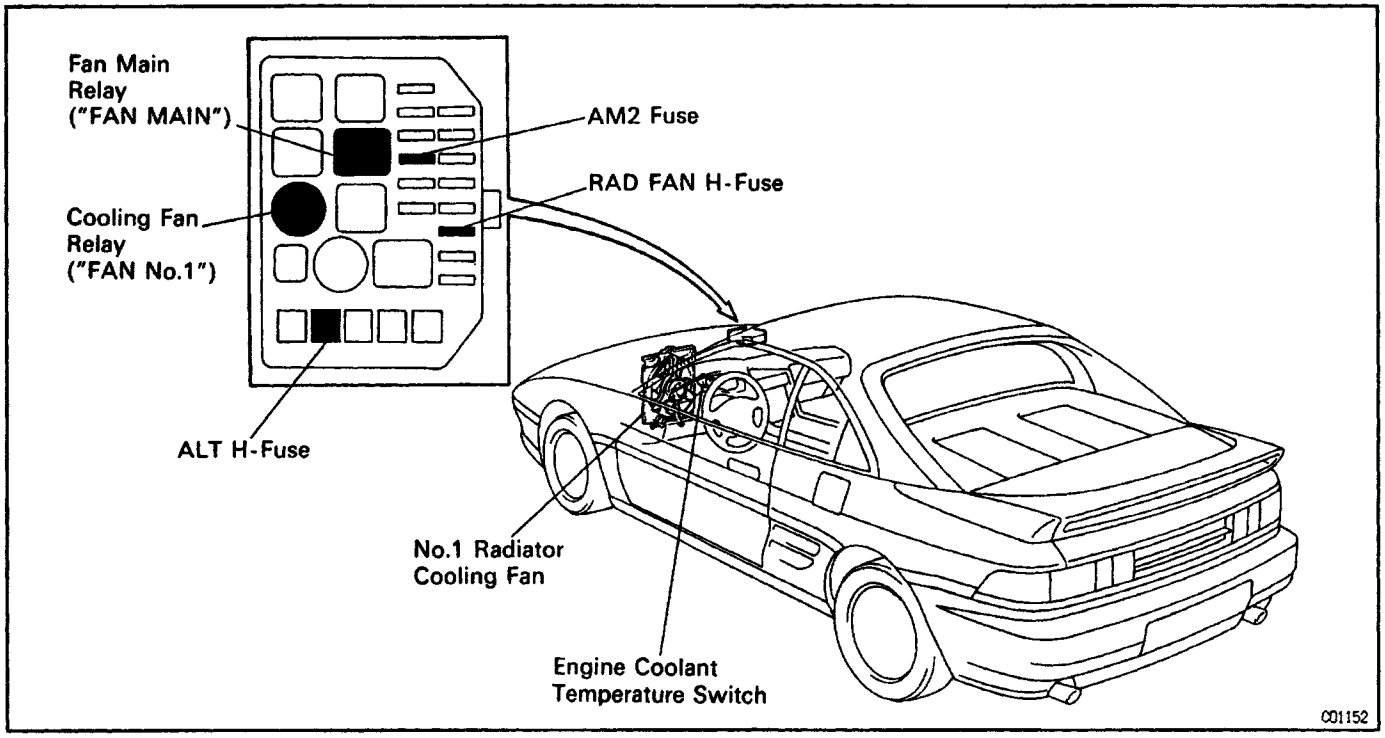

EG07C–03

System Circuit

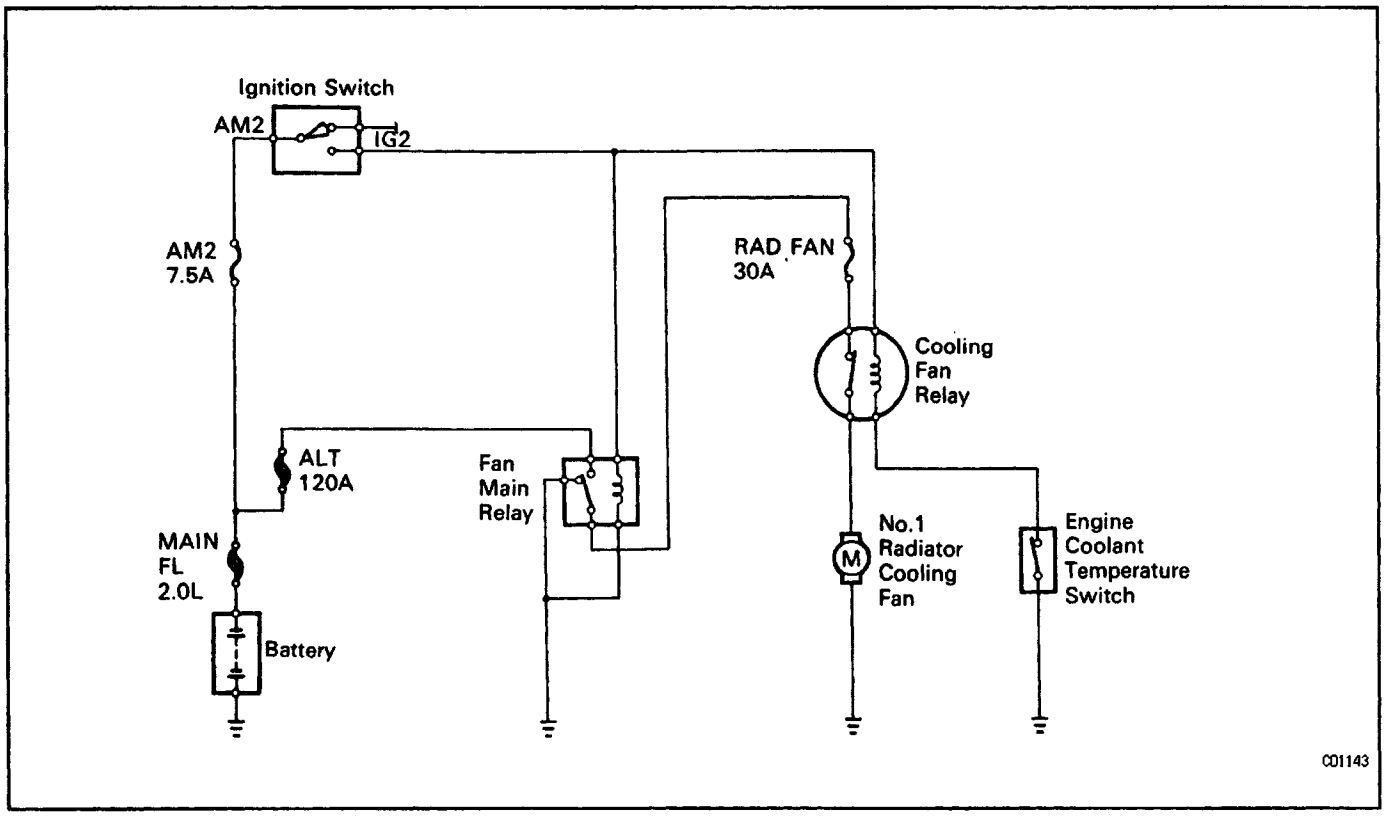

EG100–01

On–Vehicle Inspection

1. CHECK COOLING FAN OPERATION WITH LOW TEMPERATURE (Below 83˚C (181˚F))

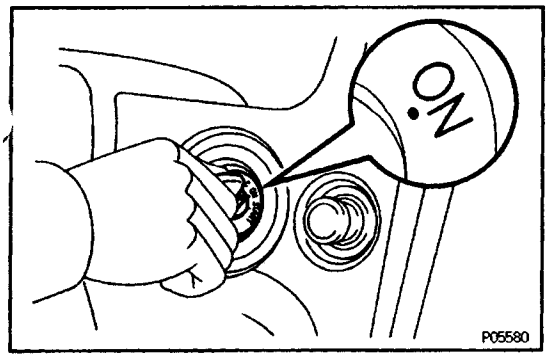

(a) Turn the ignition switch ON.

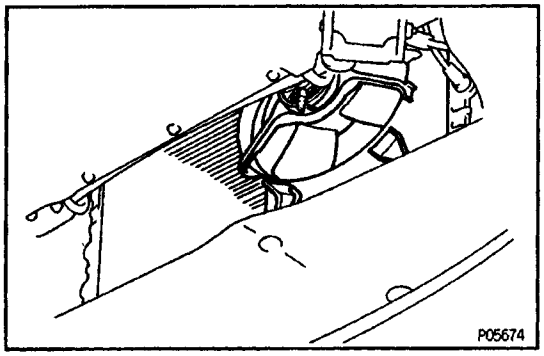

(b) Check that the cooling fan stops.

If not, check the cooling fan relay and engine coolant temperature switch, and check for a separated con–nector or severed wire between the cooling fan relay and engine coolant temperature switch.

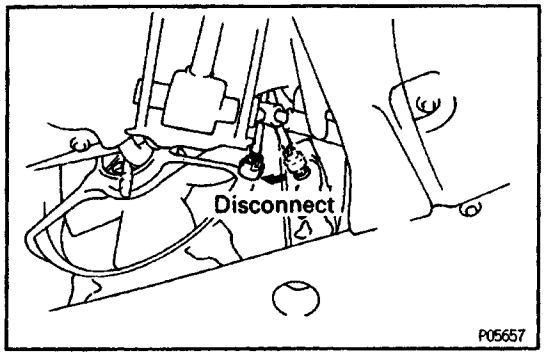

(c) Disconnect the engine coolant temperature switch.

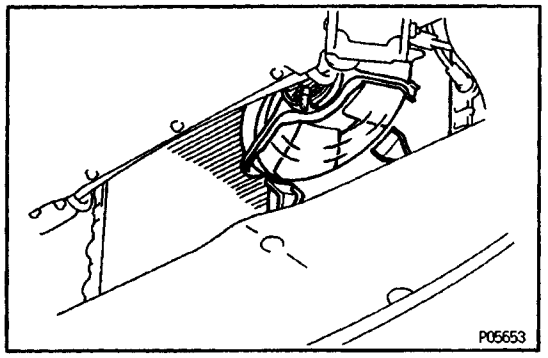

(d) Check that the cooling fan rotates.

If not, check the fan main relay, cooling fan relay, cooling fan, fuses, and check for short circuit between the cooling fan relay and engine coolant temperature switch.

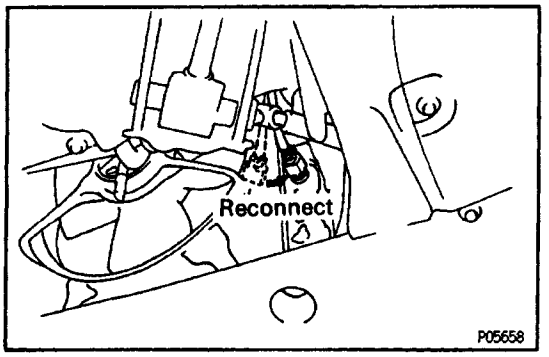

(e) Reconnect the engine coolant temperature sensor.

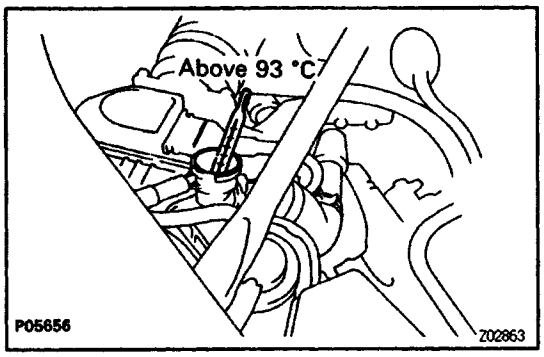

2. CHECK COOLING FAN OPERATION WITH HIGH TEMPERATURE (Above 93˚ C (199˚F))

(a) Start the engine, and raise coolant temperature to above 93˚ C (199˚ F).

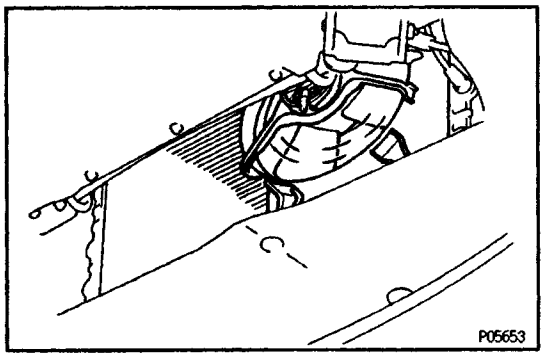

(b) Check that the cooling fan rotates.
If not, replace the engine coolant temperature switch.

E0076–05

NO.1 Cooling Fan
COMPONENTS FOR REMOVAL AND INSTALLATION

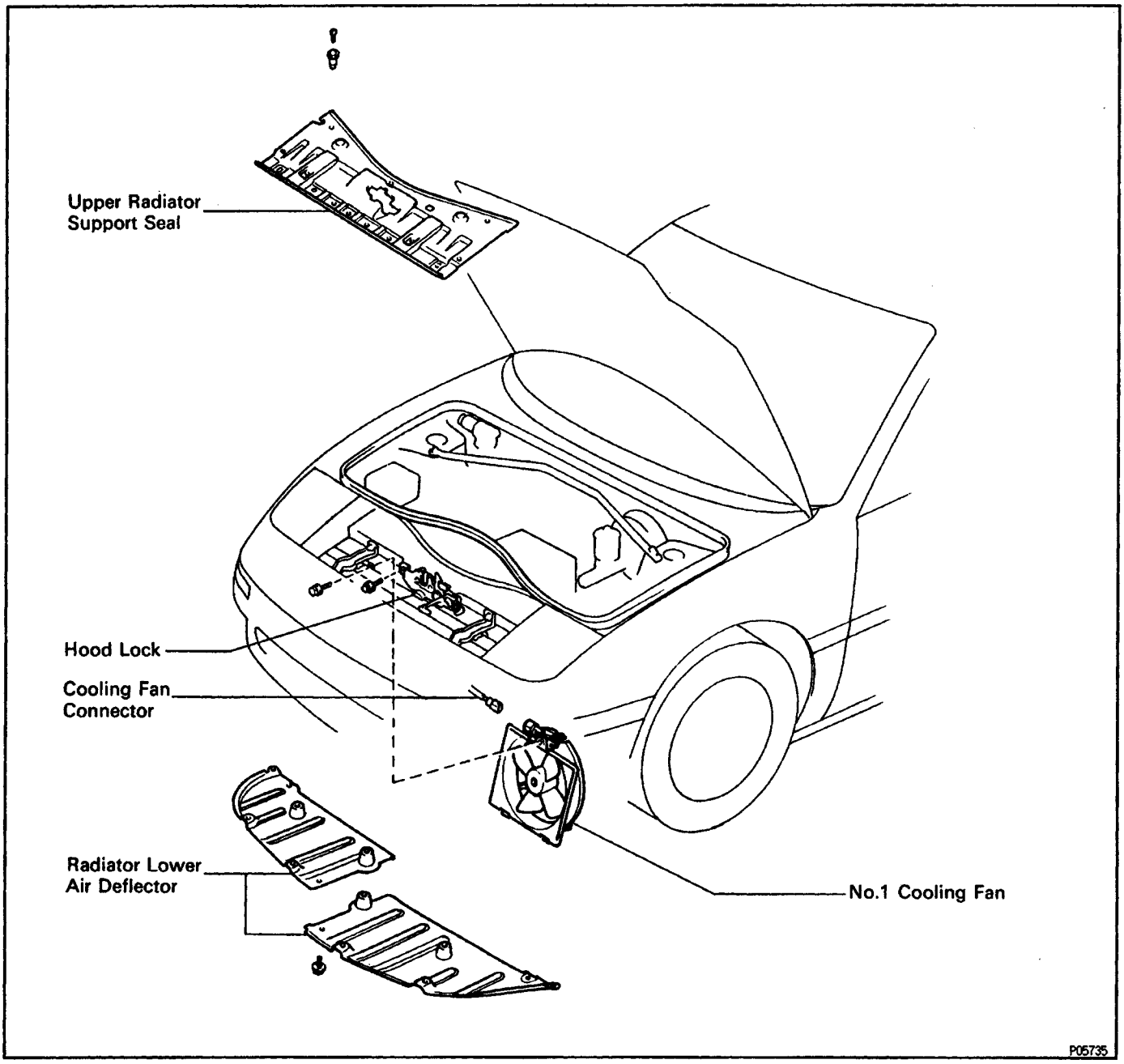

E0078–02

NO.1 COOLING FAN INSPECTION

(See Components for Removal and Installation)

1. DISCONNECT CABLE FROM NEGATIVE TERMINAL OF BATTERY

CAUTION: Turn the ignition switch to 'LOCK'. Disconnect the cable from the negative terminal of the battery. Wait at least 20 seconds before proceeding with work.

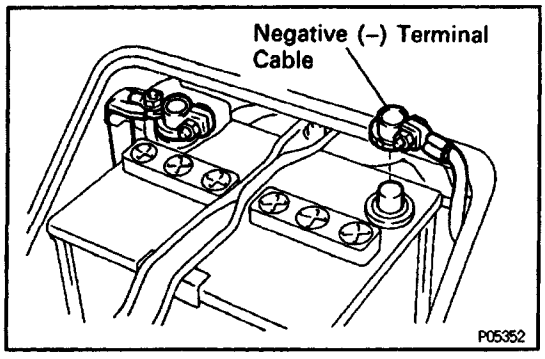

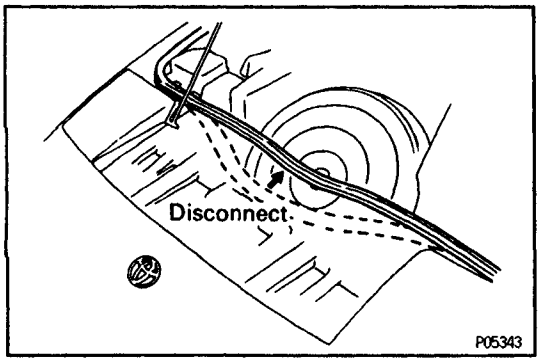

2. REMOVE UPPER RADIATOR SUPPORT SEAL

(a) Disconnect the hood weatherstrip.

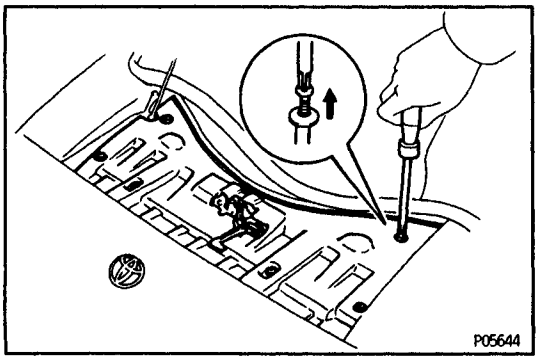

(b) Remove the seven clips.

(c) Remove the two hood lock mounting bolts, and remove the support seal.

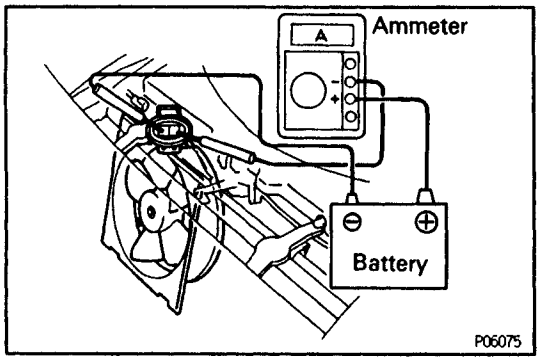

3. INSPECT NO.1 COOLING FAN

(a) Disconnect the tan connector.

(b) Connect battery and ammeter to the cooling fan connector.

(c) Check that the cooling fan rotates smoothly, and check the reading on the ammeter.

Standard amperage:

5.8 – 7.4 A

(d) Reconnect the fan connector.

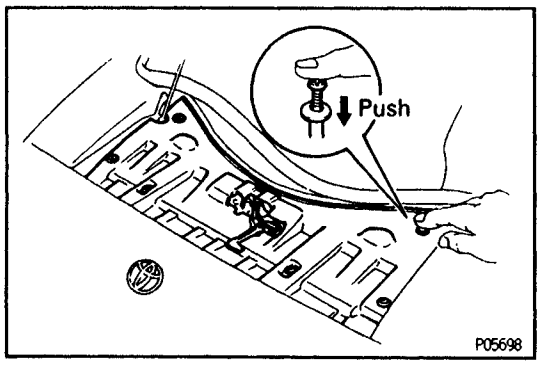

4. REINSTALL UPPER RADIATOR SUPPORT SEAL

(a) Temporarily install the hood lock with the RH side bolt.

(b) Place the support seal in position.

(c) Install the hood lock with the two bolts.

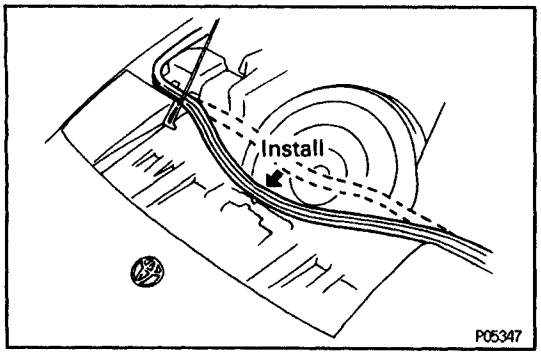

(d) Install the hood weatherstrip.

5. RECONNECT CABLE TO NEGATIVE TERMINAL OF BATTERY

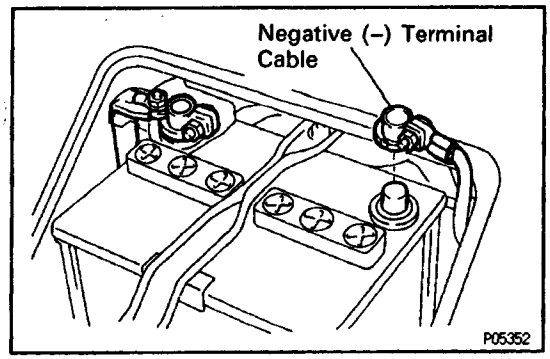

NO.1 COOLING FAN REMOVAL

(See Components for Removal and Installation)

1. DISCONNECT CABLE FROM NEGATIVE TERMINAL OF BATTERY

CAUTION: Turn the ignition switch to 'LOCK'. Disconnect the negative terminal from the battery. Wait at least 20 seconds before proceeding with work.

2. REMOVE RADIATOR LOWER AIR DEFLECTOR

3. REMOVE UPPER RADIATOR SUPPORT SEAL

(a) Disconnect the hood weatherstrip.

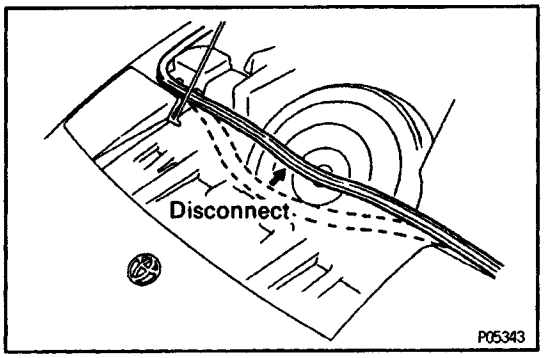

(b) Remove the seven clips.

(c) Remove the two hood lock mounting bolts, and remove the support seal.

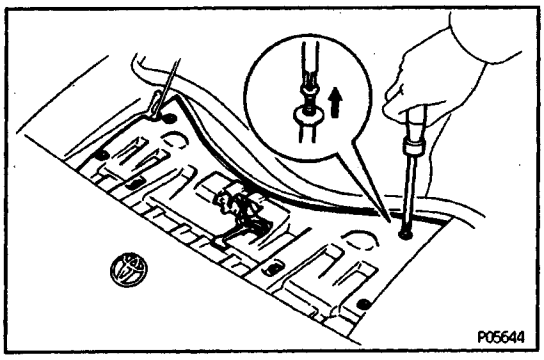

4. REMOVE NO.1 COOLING FAN

(a) Disconnect the cooling fan connector.

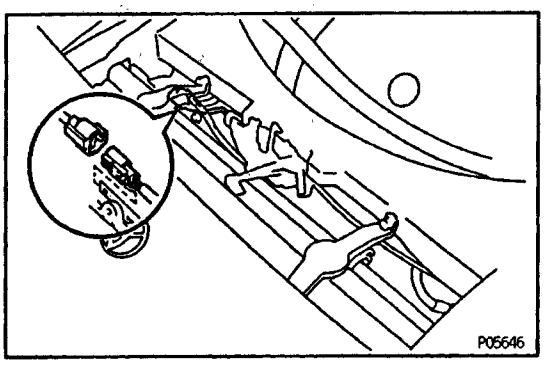

(b) Remove the three bolts and cooling fan.

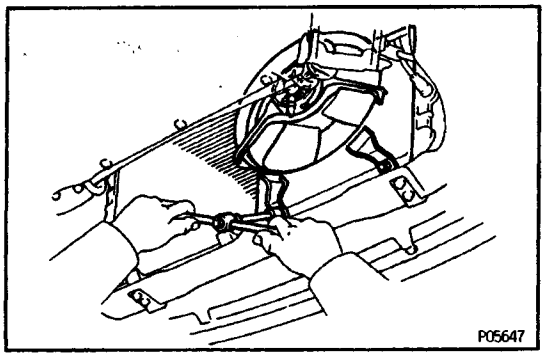

COMPONENTS FOR DISASSEMBLY AND ASSEMBLY

(See Radiator Cooling Fans (w/ A/C))

NO.1 COOLING FAN DISASSEMBLY

E0103–01

(See Radiator Cooling Fans (w/ A/C))

NO.1 COOLING FAN ASSEMBLY

E0107J–02

(See Radiator Cooling Fens (w/ A/C))

E0104–01

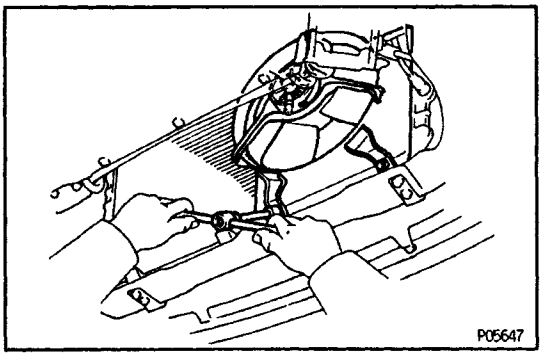

NO.1 COOLING FAN INSTALLATION
(See Components for Removal and Installation)
1. INSTALL NO.1 COOLING FAN
(a) Install the cooling fan with the three bolts.

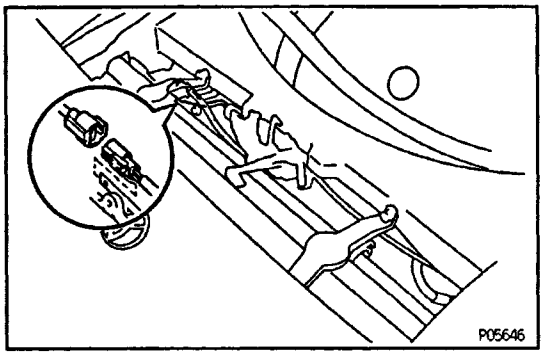

(b) Connect the cooling fan connector.

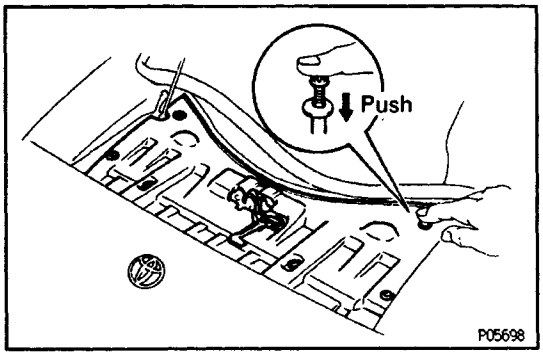

2. INSTALL UPPER RADIATOR SUPPORT SEAL
(a) Temporarily install the hood lock with the RH side bolt.
(b) Place the support seal in position.
(c) Install the hood lock with the two bolts.
(d) Install the seven clips.

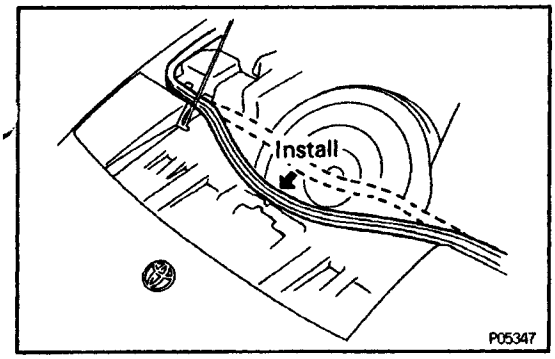

(e) Install the hood weatherstrip.

3. INSTALL RADIATOR LOWER AIR DEFLECTOR

4. CONNECT CABLE TO NEGATIVE TERMINAL OF BATTERY

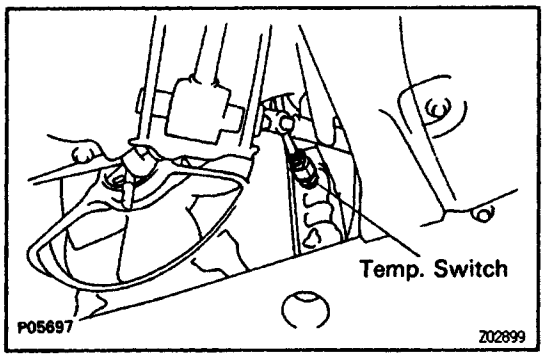

Engine Coolant Temperature Switch

ENGINE COOLANT TEMPERATURE SWITCH INSPECTION

1. DRAIN ENGINE COOLANT

2. REMOVE ENGINE COOLANT TEMPERATURE SWITCH

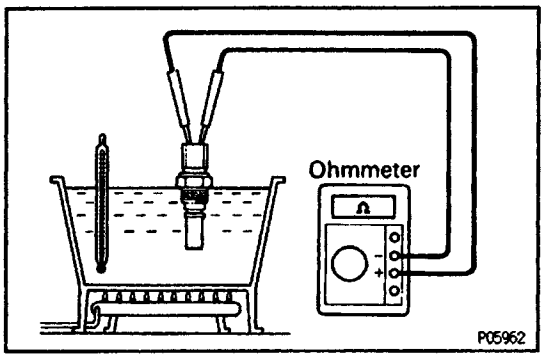

3. INSPECT ENGINE COOLANT TEMPERATURE SWITCH

(a) Using an ohmmeter, check that there is no continuity between the terminals when the coolant temperature is above 93˚C (199˚F).

(b) Using an ohmmeter, check that there is continuity between the terminals when the coolant temperature is below 83˚C (181˚F).

If continuity is not as specified, replace the switch.

4. REINSTALL ENGINE COOLANT TEMPERATURE SWITCH

5. REFILL WITH ENGINE COOLANT

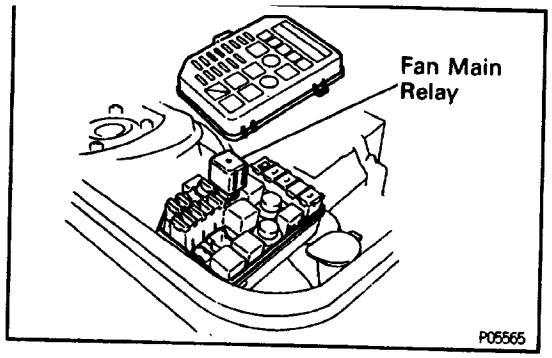

Fan Main Relay (’FAN MAIN”)

EG106–01

FAN MAIN RELAY INSPECTION

(See Radiator Cooling Fens (w/ A/C))

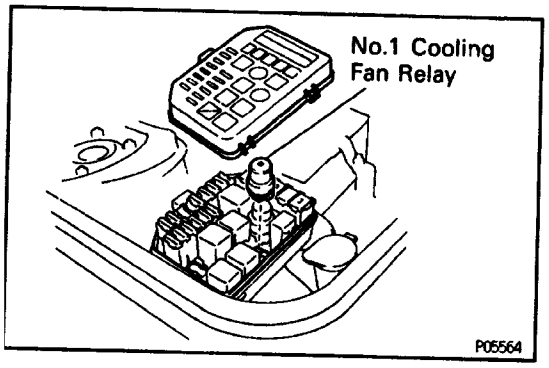

No–1 Cooling Fan Relay (’FAN NO.1”)

EG107–01

NO–1 COOLING FAN RELAY INSPECTION

(See Radiator Cooling Fans (w/ A/C))

RADIATOR ELECTRIC COOLING FAN (WITH AC)

EG07B–02

Parts Location

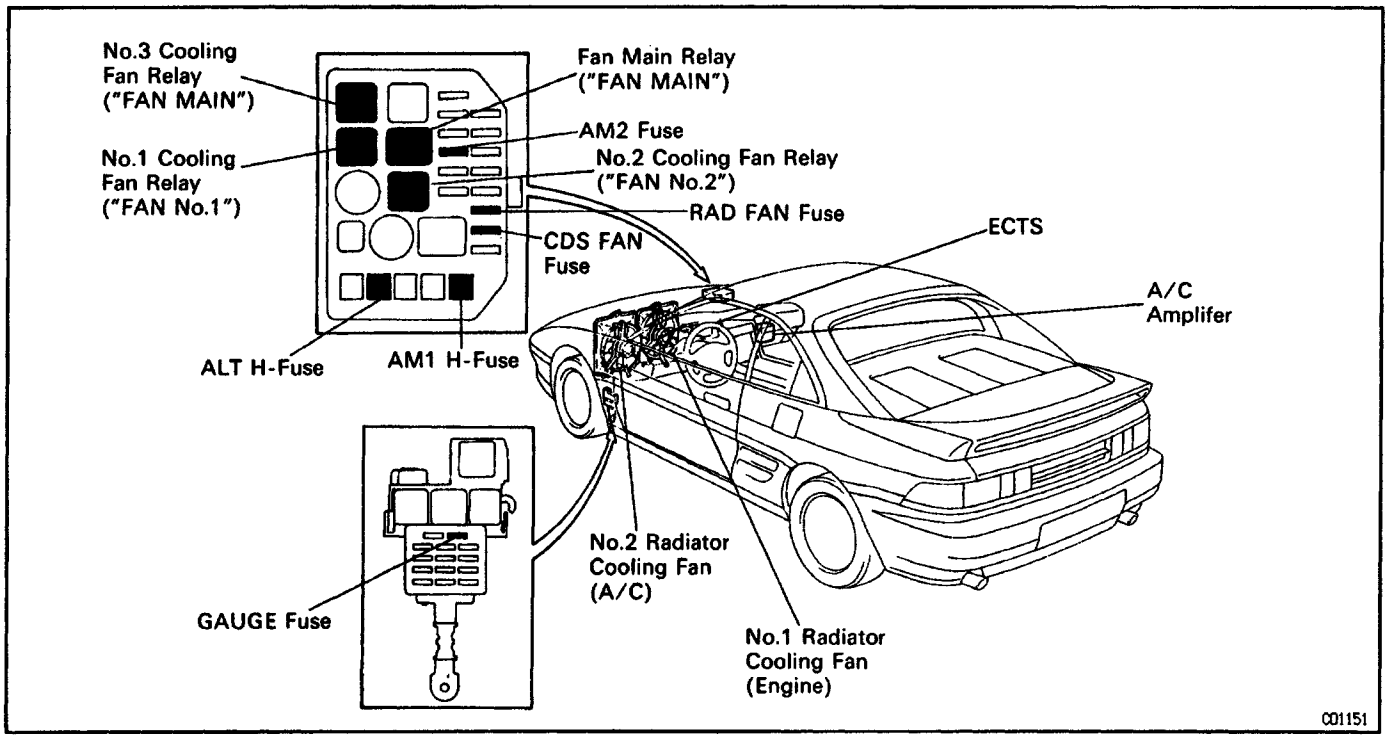

EG07C–02

System Circuit

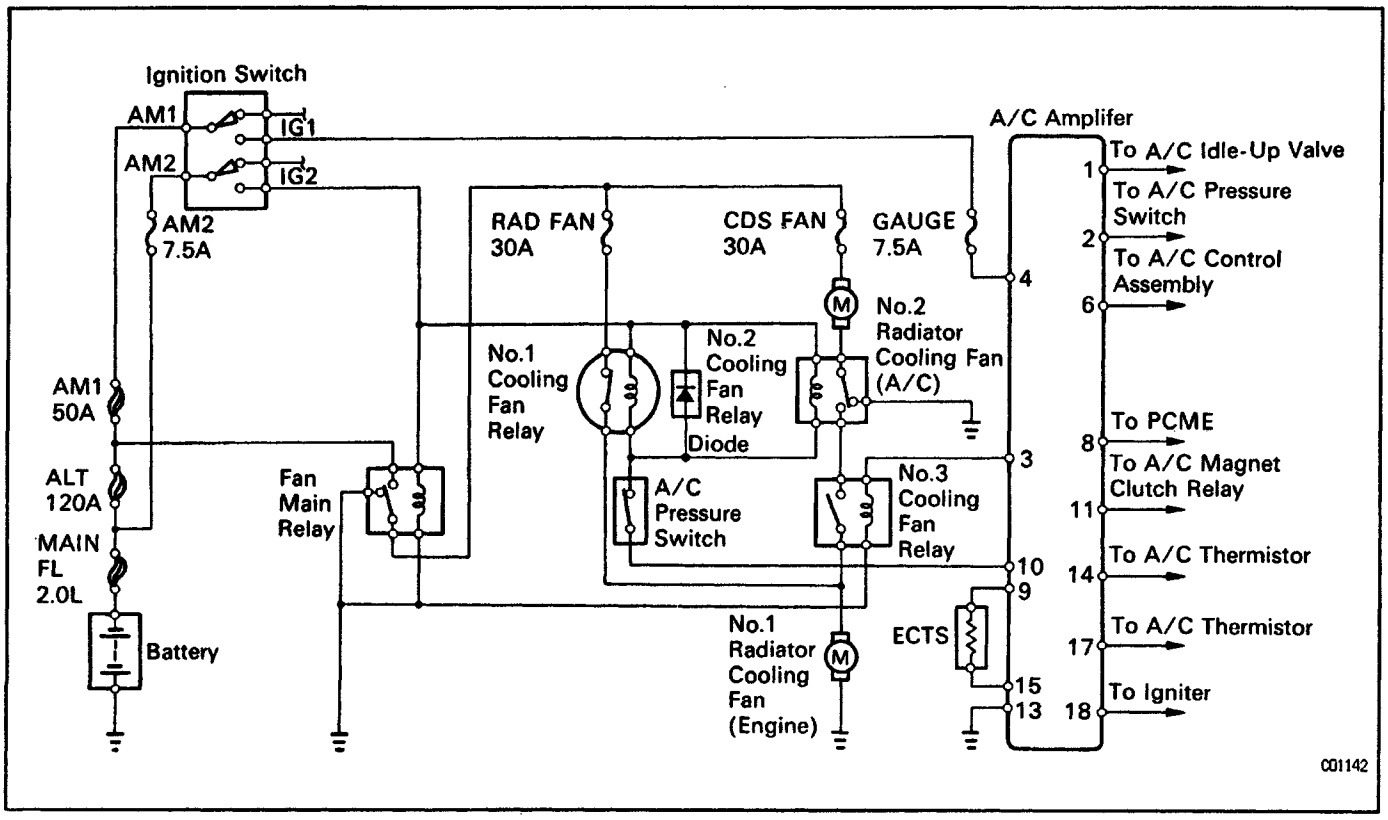

EG0ZN–01

On–Vehicle Inspection

1. INSPECT COOLING FAN OPERATION AT LOW TEMPERATURE (Below 85˚C (185˚F))

(a) Turn the ignition switch ON.

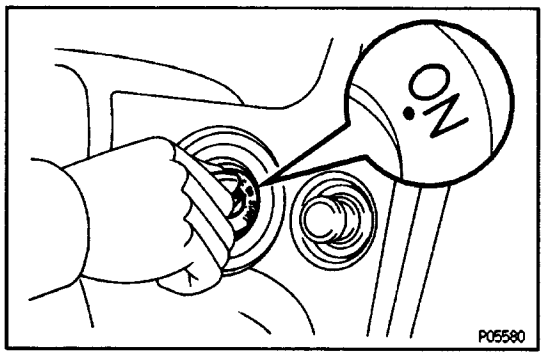

(b) Check that the cooling fans stops.

If not, check the cooling fan relays and ECTS, and check for a separated connector or severed wire between the cooling fan relay and ECTS.

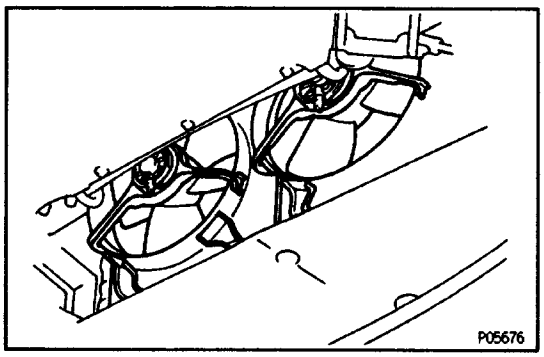

(c) Disconnect the ECTS connector.

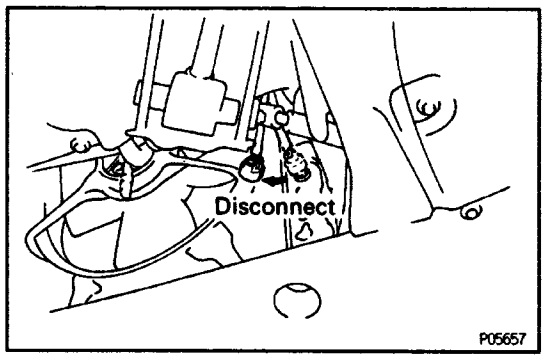

(d) Check that the cooling fans rotates.

If not, check the fuses, fan main relay, cooling fan relays, A/C amplifier, cooling fan, and check for a short circuit between the cooling fan relay and ECTS.

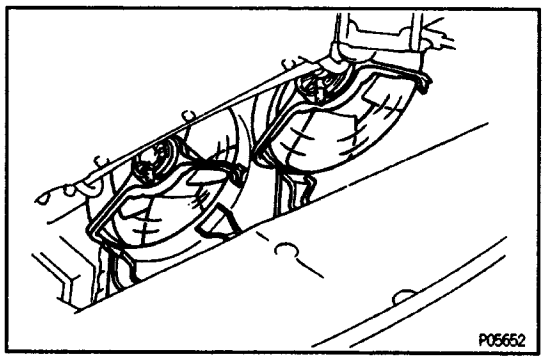

(e) Reconnect the ECTS connector.

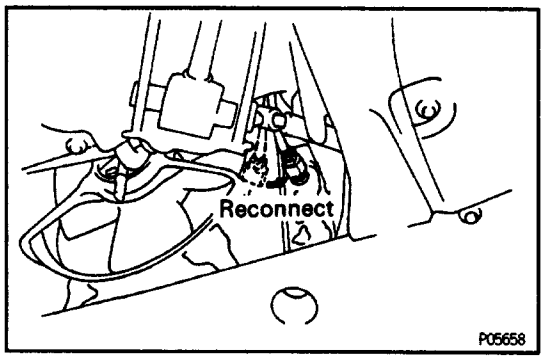

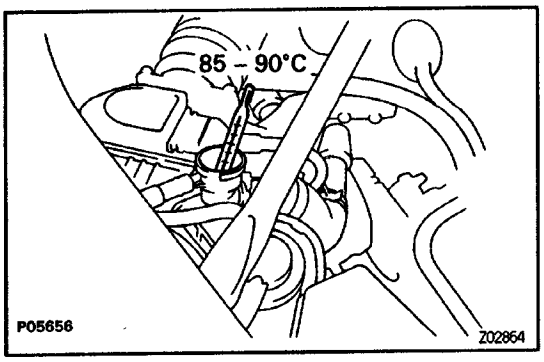

2. INSPECT COOLING FAN OPERATION AT HIGH TEMPERATURE (85 – 90˚C (185 – 194˚F))

(a) Start the engine, and raise coolant temperature to 85 – 90˚C (185 – 194˚ F).

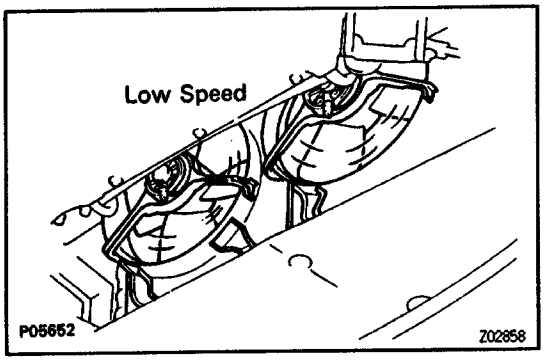

(b) Check that the cooling fans rotates at low speed. If not, replace the ECTS.

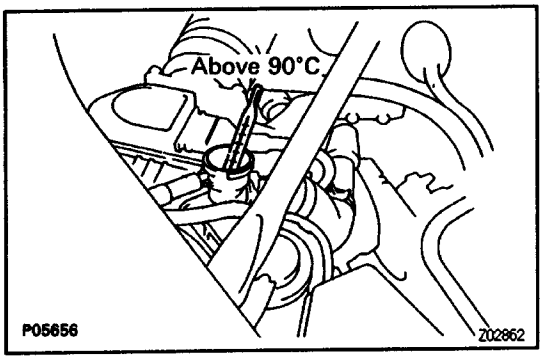

3. INSPECT COOLING FAN OPERATION AT HIGH TEMPERATURE (Above 90˚C (194˚F))

(a) Start the engine, and raise coolant temperature to above 90˚ C (194˚ F).

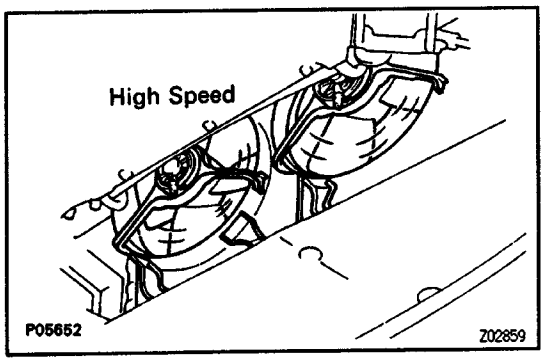

(b) Check that the cooling fans rotates at high speed. If not, replace the ECTS.

Cooling Fans
COMPONENTS FOR REMOVAL AND INSTALLATION

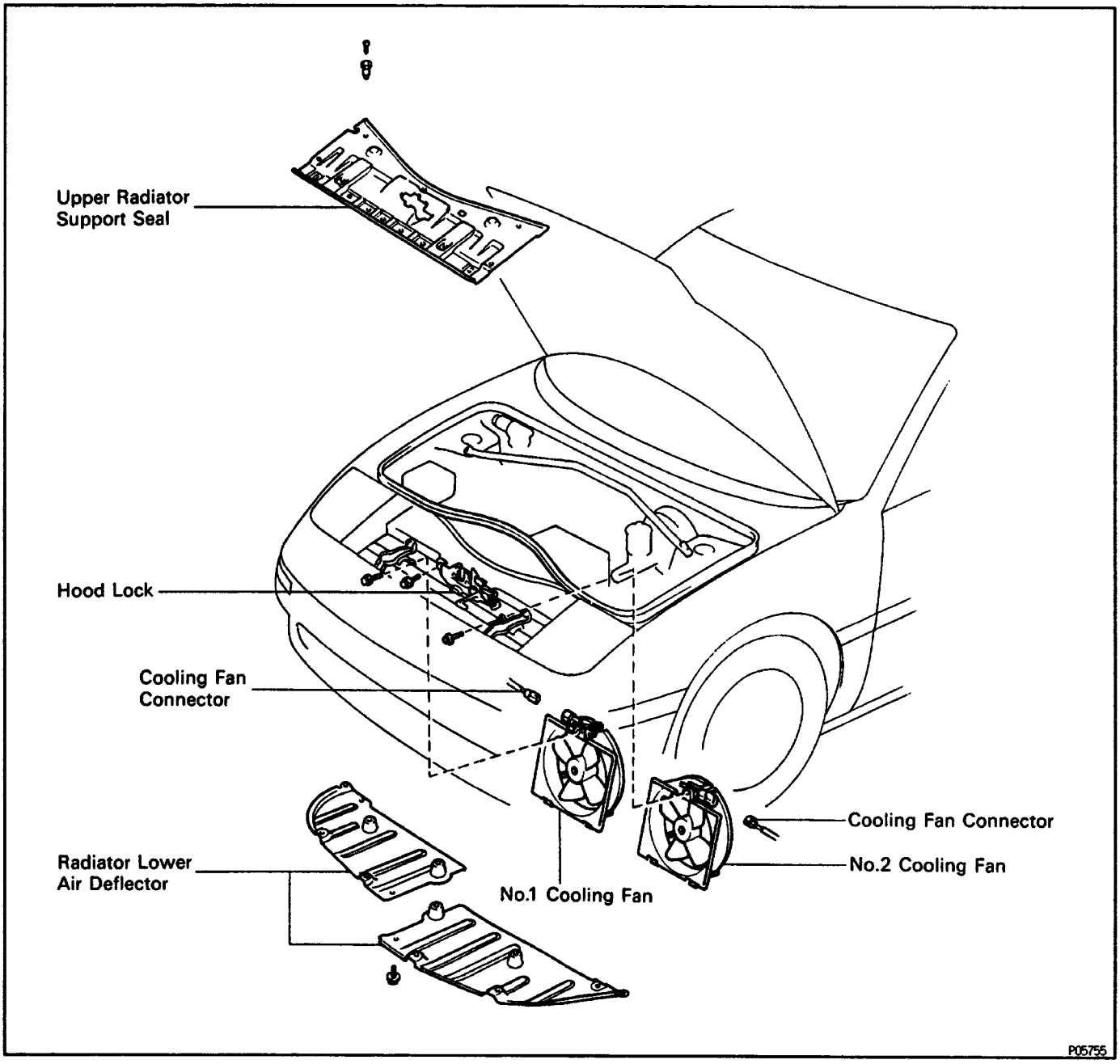

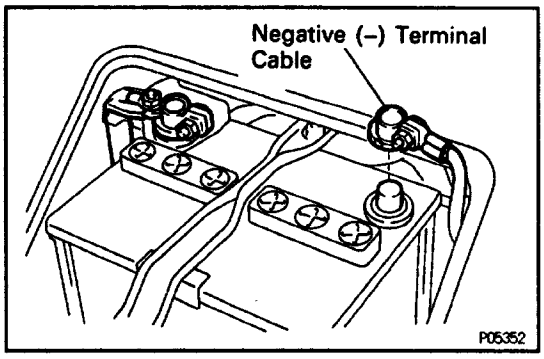

COOLING FANS INSPECTION

(See Components for Removal and Installation)

1. DISCONNECT CABLE FROM NEGATIVE TERMINAL OF BATTERY

CAUTION: Turn the ignition switch to 'LOCK'. Disconnect the negative terminal from the battery. Wait at least 20 seconds before proceeding with work.

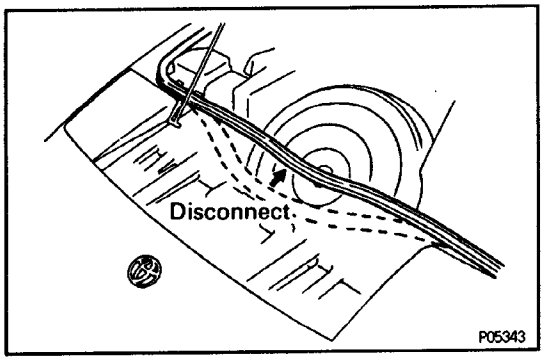

2. REMOVE UPPER RADIATOR SUPPORT SEAL

(a) Disconnect the hood weatherstrip.

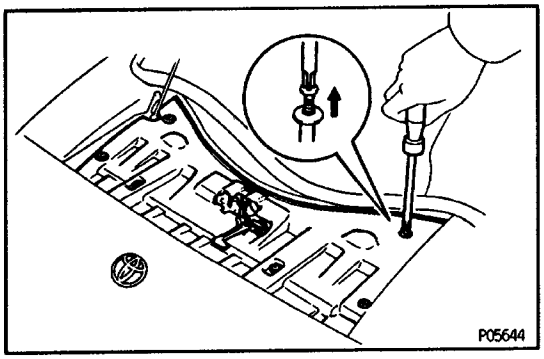

(b) Remove the seven clips.

(c) Remove the two hood lock mounting bolts, and remove the support seal.

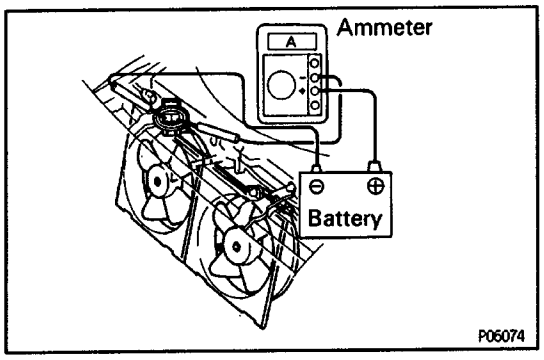

3. INSPECT COOLING FANS

(a) Disconnect the two cooling fan connectors.

(b) Connect battery and ammeter to the cooling fan connector.

(c) Check that the cooling fan rotates smoothly, and check the reading on the ammeter.

Standard amperage:

5.8 – 7.4 A

(d) Reconnect the two cooling fan connectors.

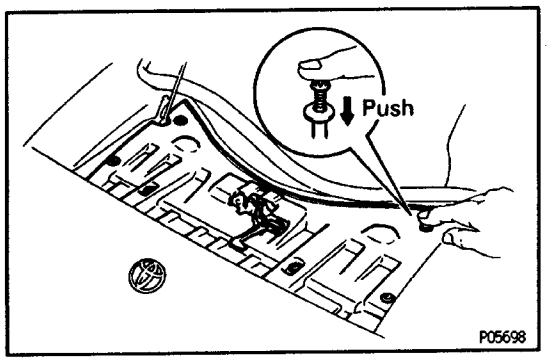

4. REINSTALL UPPER RADIATOR SUPPORT SEAL

(a) Temporarily install the hood lock with the RH side bolt.

(b) Place the support seal in position.

(c) Install the hood lock with the two bolts.

(d) Install the seven clips.

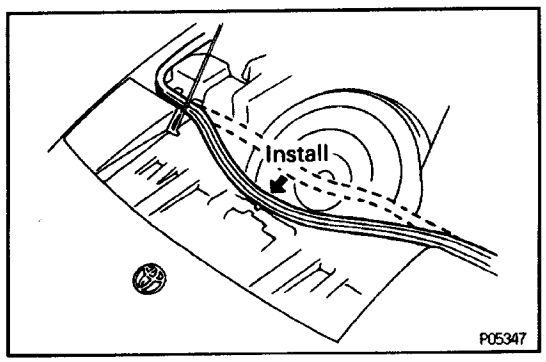

(e) Install the hood weatherstrip.

5. RECONNECT CABLE TO NEGATIVE TERMINAL OF BATTERY

EG02G–01

COOLING FANS REMOVAL

(See Components for Removal and Installation)

1. DISCONNECT CAGE FROM NEGATIVE TERMINAL OF BATTERY

CAUTION: Turn the ignition switch to "LOCK". Disconnect the negative terminal from the battery. Wait at least 20 seconds before proceeding with work.

2. REMOVE RADIATOR LOWER AIR DEFLECTOR

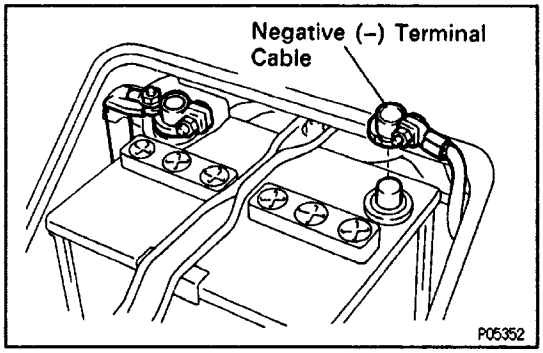

3. REMOVE UPPER RADIATOR SUPPORT SEAL

(a) Disconnect the hood weatherstrip.

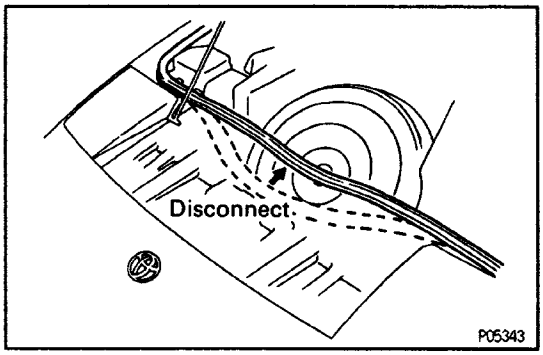

(b) Remove the seven clips.

(c) Remove the two hood lock mounting bolts, and remove the support seal.

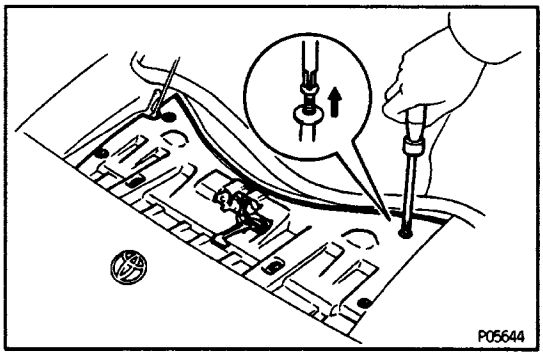

4. REMOVE COOLING FANS

(a) Disconnect the two cooling fan connectors.

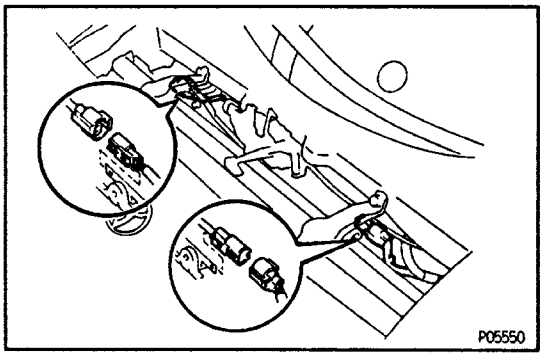

(b) Remove the three bolts and cooling fan. Remove the two cooling fans.

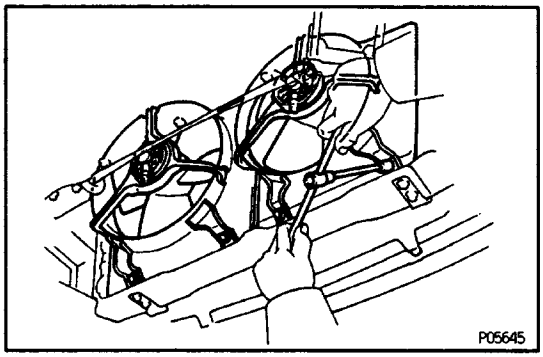

COMPONENTS FOR DISASSEMBLY AND ASSEMBLY

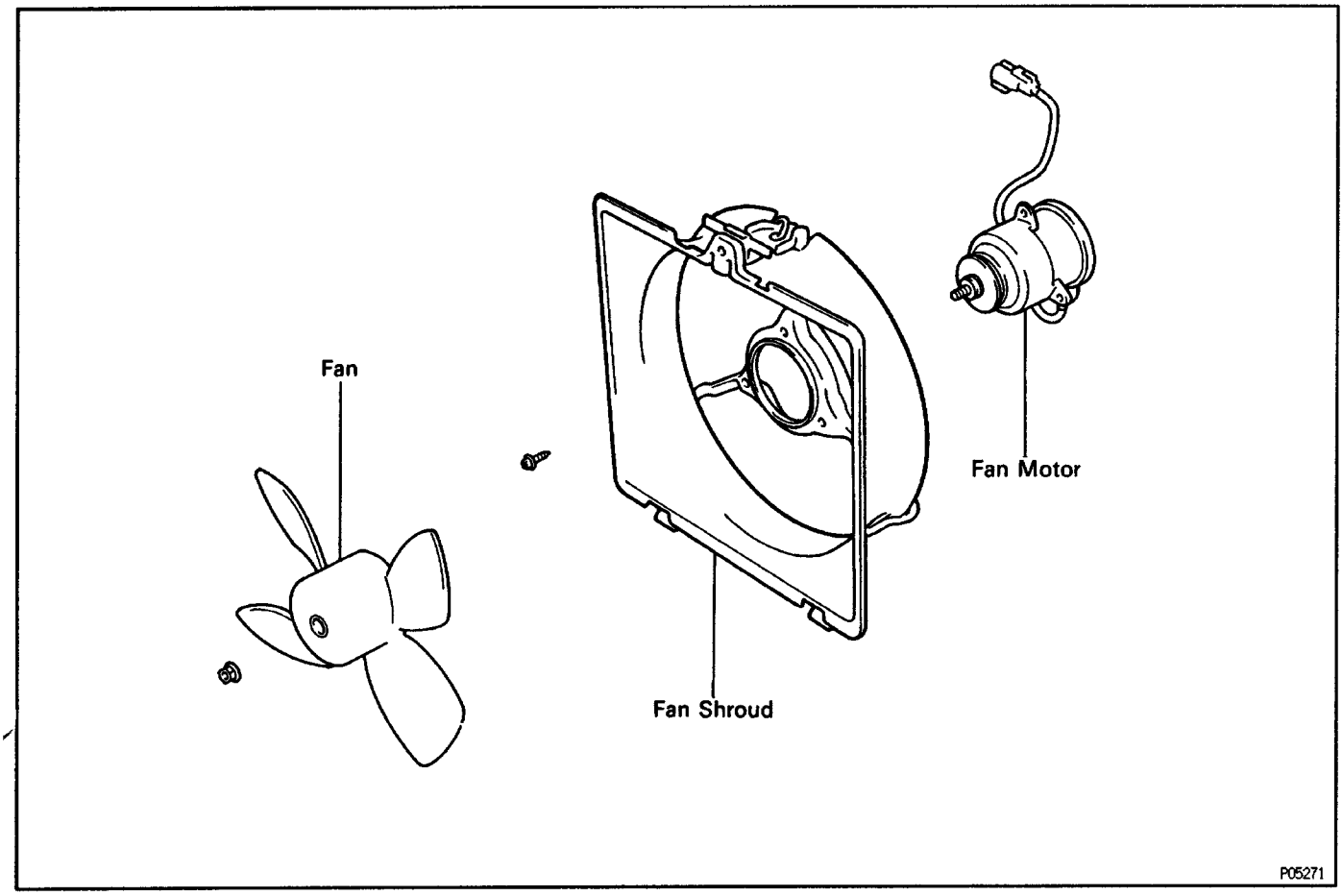

EG02R–01

COOLING FAN DISASSEMBLY

(See Components for Disassembly and Assembly)

1. REMOVE FAN

Remove the nut and fan.

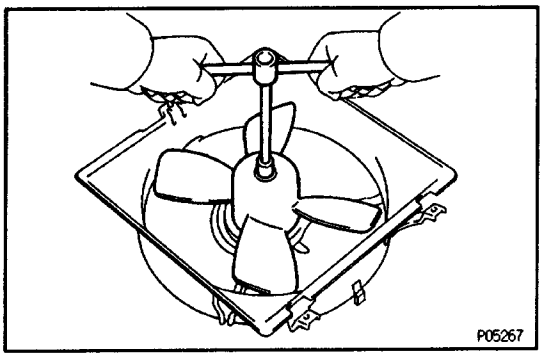

2. REMOVE FAN MOTOR

(a) Disconnect the wire and connector from the fan shroud.

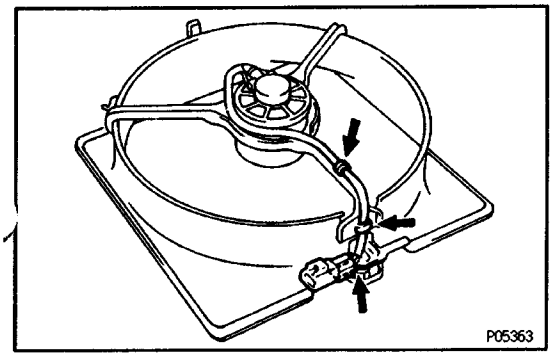

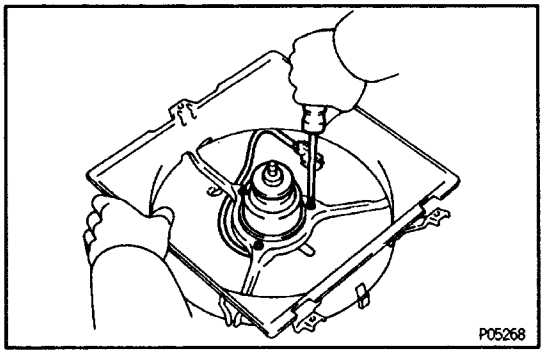

(b) Remove the three screws and fan motor.

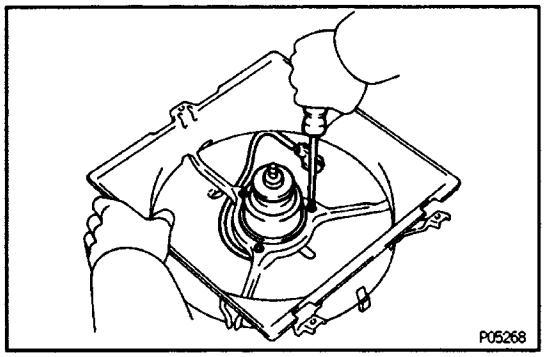

E0GZS–01

COOLING FAN ASSEMBLY

(See Components for Disassembly and Assembly)

1. INSTALL FAN MOTOR

(a) Install the fan motor with the nut.

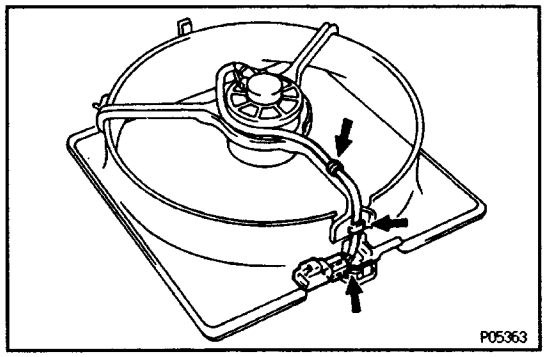

(b) Install the wire and connector to the fan shroud.

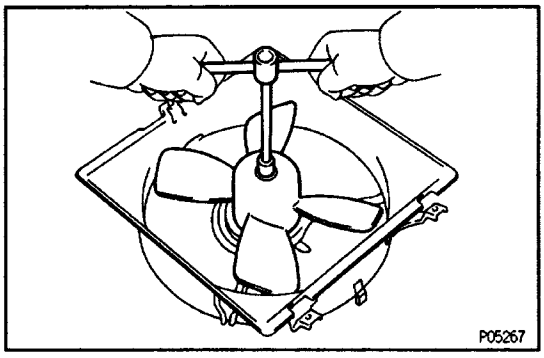

2. INSTALL FAN

Install the fan with the nut.

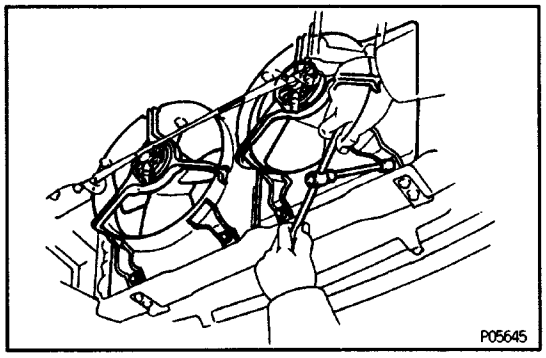

E0GZT–01

COOLING FANS INSTALLATION

(See Components for Disassembly and Assembly)

1. INSTALL COOLING FANS

(a) Install the cooling fan with the three bolts. Install the two cooling fans.

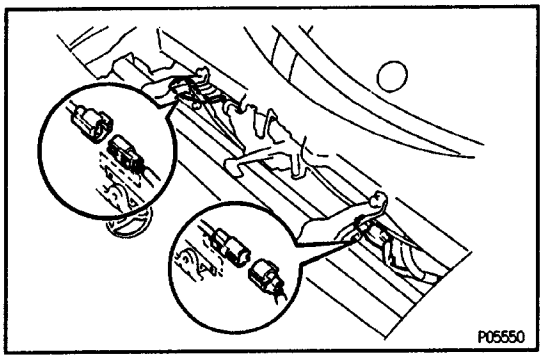

(b) Connect the two cooling fan connectors.

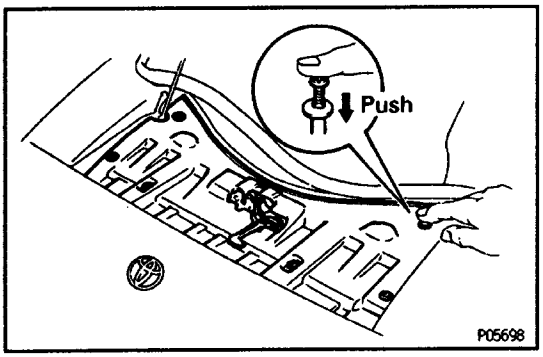

2. INSTALL UPPER RADIATOR SUPPORT SEAL

(a) Temporarily install the hood lock with the RH side bolt.
(b) Place the support seal in position.
(c) Install the hood lock with the two bolts.
(d) Install the seven clips.

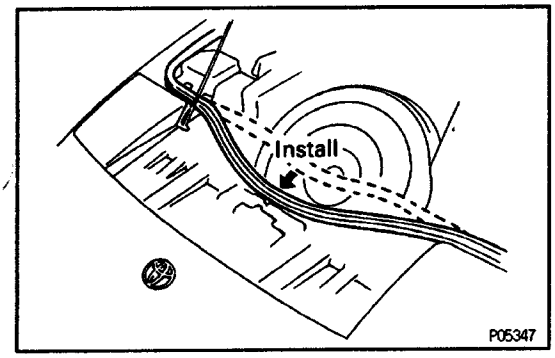

(e) Install the hood weatherstrip.

3. INSTALL RADIATOR LOWER AIR DEFLECTOR

4. CONNECT CABLE TO NEGATIVE TERMINAL OF BATTERY

E0470–04

A/C Amplifier
COMPONENTS FOR REMOVAL AND INSTALLATION

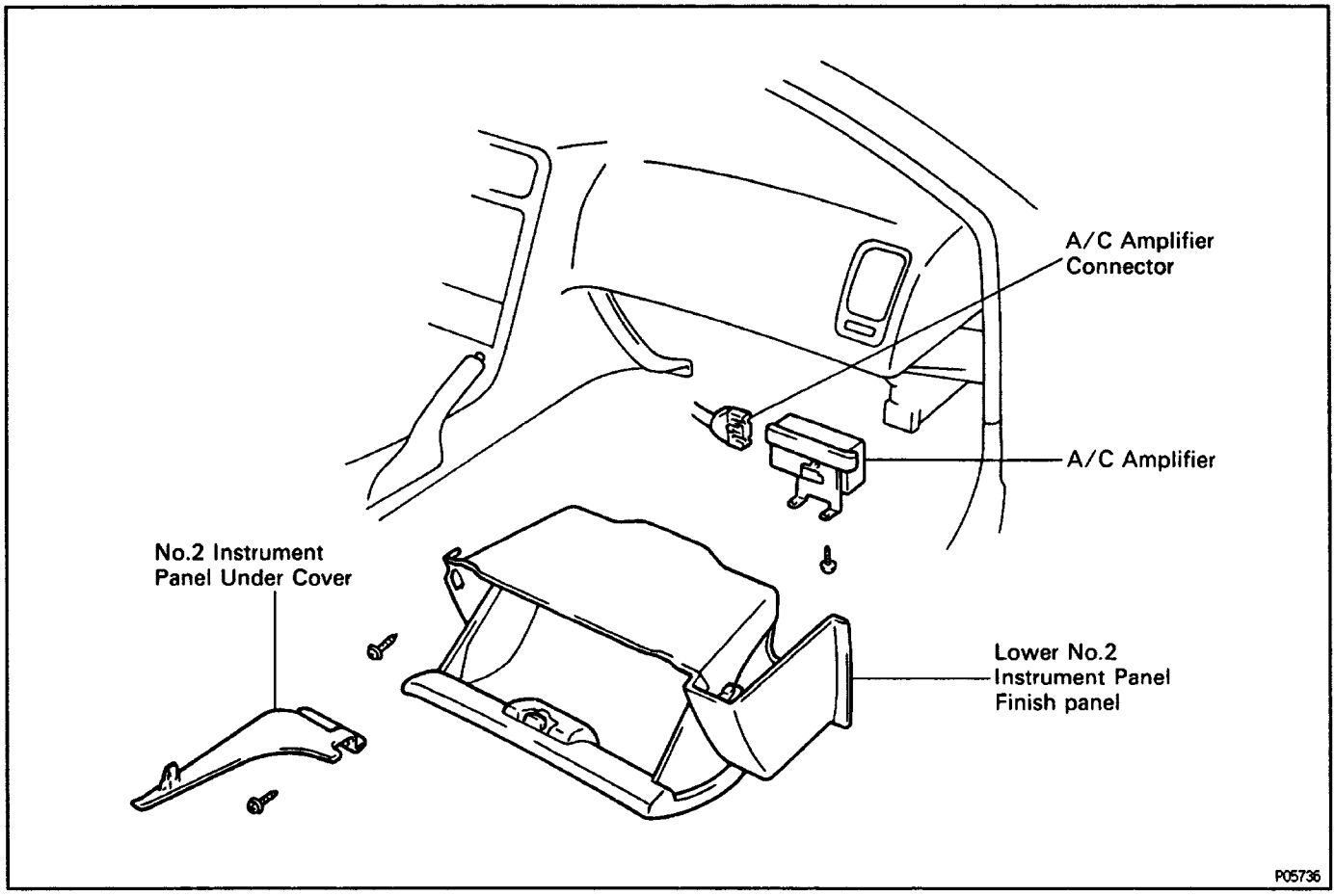

E0470–01

A/C AMPLIFIER INSPECTION

(See Components for Removal and Installation)

1. DISCONNECT CABLE FROM NEGATIVE TERMINAL OF BATTERY

CAUTION: Turn the ignition switch to 'LOCK'. Disconnect the negative terminal from the battery. Wait at least 20 seconds before proceeding with work.

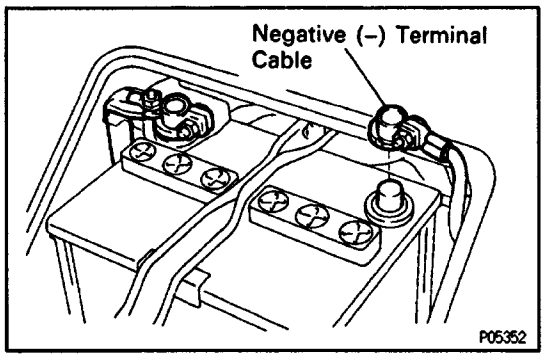

2. REMOVE NO.2 INSTRUMENT PANEL UNDER COVER

(a) Remove the screw.

(b) Remove the under cover by pulling it.

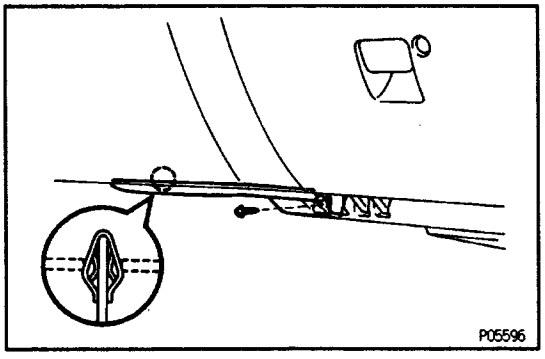

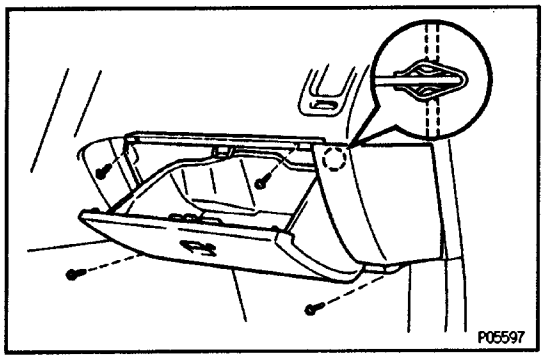

3. REMOVE LOWER NO.2 INSTRUMENT FINISH PANEL

(a) Remove the four screws.
(b) Remove the finish panel by pulling it.

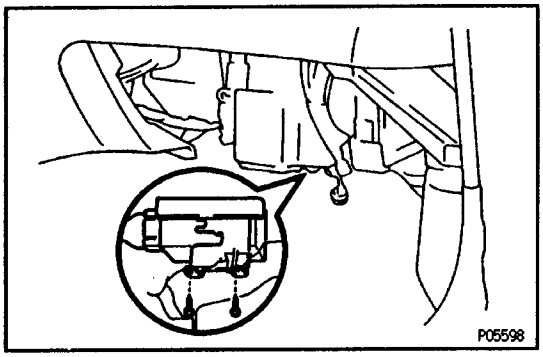

4. INSPECT A/C AMPLIFIER

(a) Remove the two screw, and disconnect the A/C amplifier from the cooler unit.
(b) Disconnect the A/C amplifier connector.

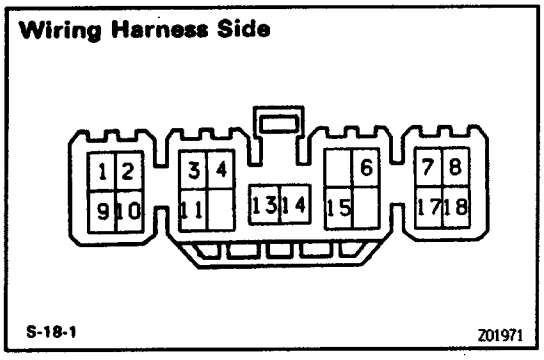

(c) Check the connector on the wiring harness side as shown in the chart.

Check for	Tester connection	Condition		Specified valve
Continuity	3 – Ground	–		Continuity
Voltage	4 – Ground	Ignition switch ON		Battery voltage
Resistance	9–15	Coolant temp.	85°C (I85°F)	Approx. 1.35 kΩ
			90°C (I94°F)	Approx. 1.19 kΩ
			95°C (203°F)	Approx. 1.05 kΩ
Voltage	10 – Ground	Ignition switch ON		Battery voltage
Continuity	13 – Ground	–		Continuity

V00873

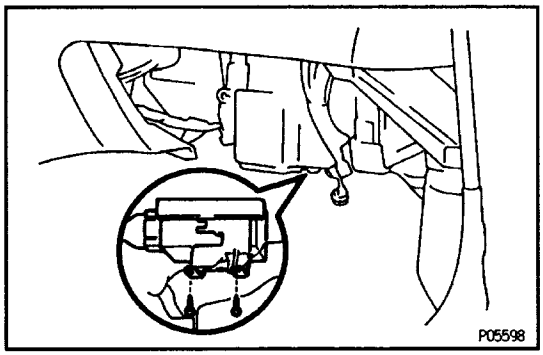

(d) Reconnect the A/C amplifier connector.
(e) Reinstall the A/C amplifier with the two screws.

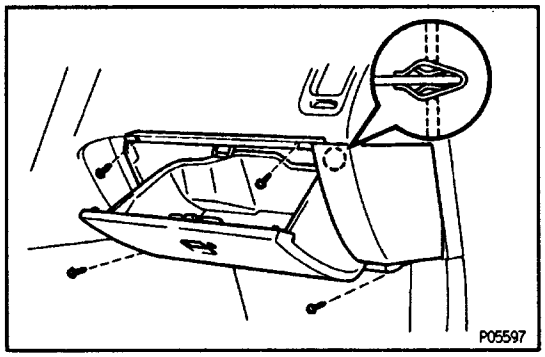

5. REINSTALL LOWER NO.2 INSTRUMENT FINISH PANEL

(a) Attach the finish panel to the instrument panel with the clips.
(b) Install the four screws.

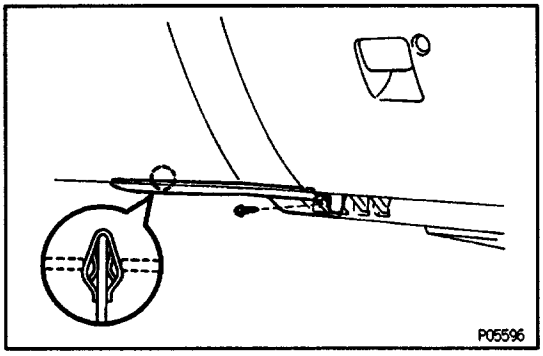

6. REINSTALL NO.2 INSTRUMENT PANEL UNDER COVER

(a) Attach the finish panel to the instrument panel with the clips.
(b) Install the screw.

7. RECONNECT CABLE TO NEGATIVE TERMINAL OF BATTERY

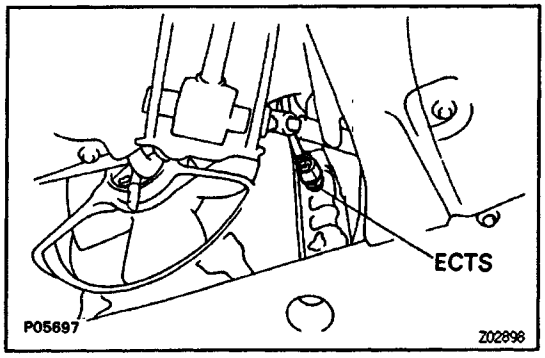

Engine Coolant Temperature Sensor (ECTS)

ECTS INSPECTION

1. DRAIN ENGINE COOLANT FROM RADIATOR

2. REMOVE ECTS

(a) Disconnect the sensor connector.

(b) Remove the ECTS.

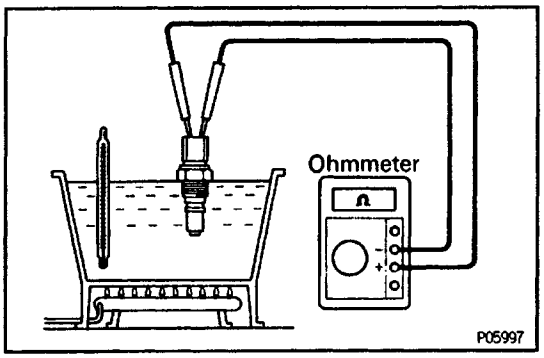

3. INSPECT ECTS

Using an ohmmeter, measure the resistance between the terminals.

Resistance:

Approx. 1.35 kΩ at 85˚ C (185˚ F)

Approx. 1.19 kΩ at 90˚ C (194˚ F)

Approx. 1.05 kΩ at 95˚C (203˚F)

If resistance is not as specified, replace the ECTS.

4. REINSTALL ECTS

5. REFILL WITH ENGINE COOLANT

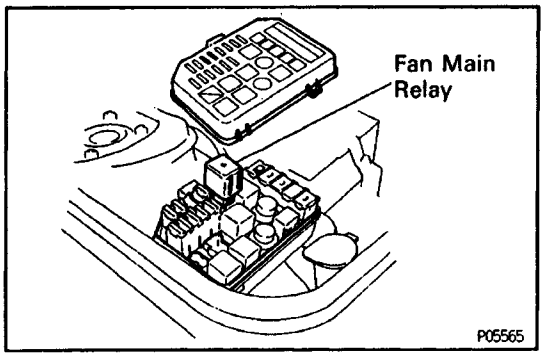

B90ZW–01

Fan Main Relay (”FAN MAIN’)

FAN MAIN RELAY INSPECTION

1. REMOVE FAN MAIN RELAY

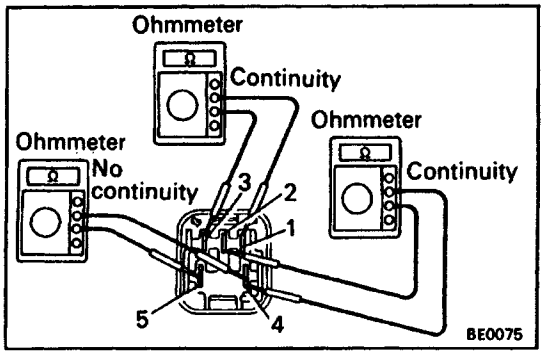

2. INSPECT FAN MAIN RELAY

A. Inspect relay continuity

(a) Using an ohmmeter, check that there is continuity between terminals 1 and 3.

(b) Check that there is continuity between terminals 2 and 4.

(c) Check that there is no continuity between terminals 4 and 5.

If continuity is not as specified, replace the relay.

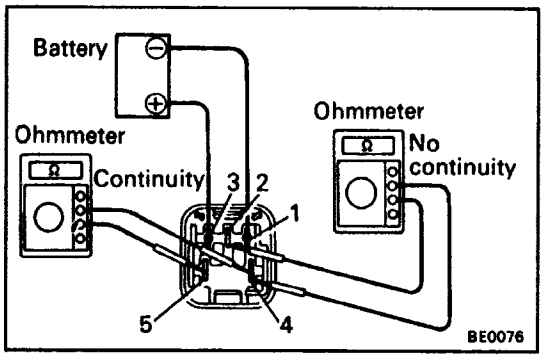

B. Inspect relay operation

(a) Apply battery voltage across terminals 1 and 3.

(b) Using an ohmmeter, check that there is no continuity between terminals 2 and 4.

(c) Check that there is continuity between terminals 4 and 5.

If operation is not as specified, replace the relay.

3. REINSTALL FAN MAIN RELAY

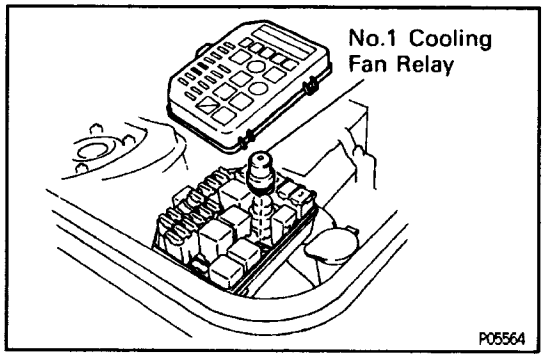

No.1 Cooling Fan Relay (”FAN NO.1”) E002X-01

NO.1 COOLING FAN RELAY INSPECTION

7. REMOVE N0.7 COOLING FAN RELAY

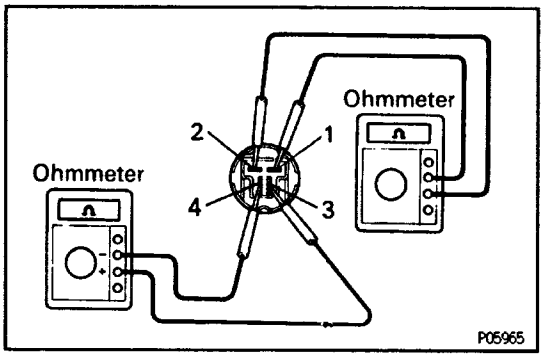

2. INSPECT NO.1 COOLING FAN RELAY

A. Inspect relay continuity

(a) Using an ohmmeter, check that there is continuity between terminals 1 and 2.

(b) Check that there is continuity between terminals 3 and 4.

If continuity is not as specified, replace the relay.

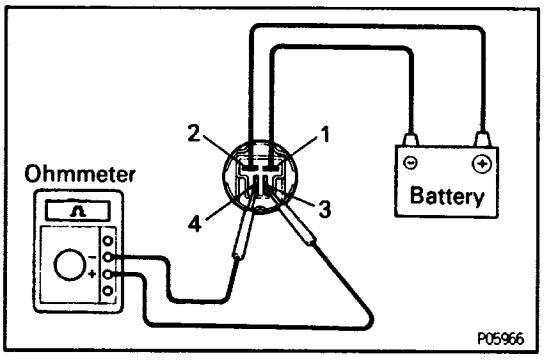

B. Inspect relay operation

(a) Apply battery voltage across terminals 1 and 2.

(b) Using an ohmmeter, check that there is no continuity between terminals 3 and 4.

If operation is not as specified, replace the relay.

3. REINSTALL NO.1 COOLING FAN RELAY

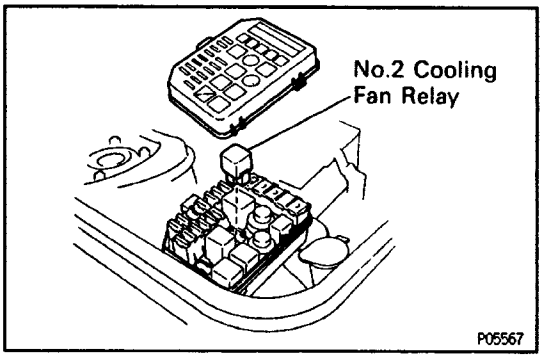

No.2 Cooling Fan Relay (’FAN NO.2’) E002Y-01

NO.2 COOLING FAN RELAY INSPECTION

1. REMOVE NO.2 COOLING FAN RELAY

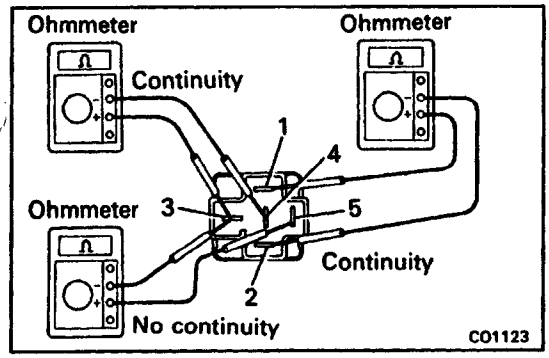

2. INSPECT NO.2 COOLING FAN RELAY

A. Inspect relay continuity

(a) Using an ohmmeter, check that there is continuity between terminals 1 and 2.

(b) Check that there is continuity between terminals 3 and 4.

(c) Check that there is no continuity between terminals 3 and 5.

If continuity is not as specified, replace the relay.

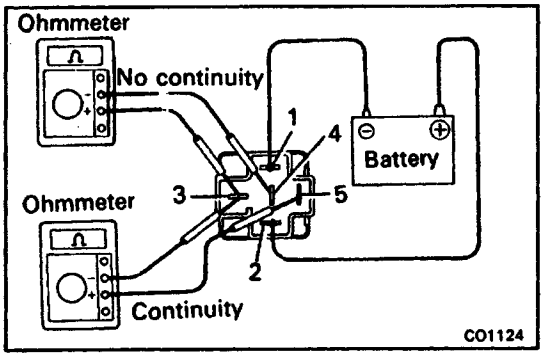

B. Inspect relay operation

(a) Apply battery voltage across terminals 1 and 2.

(b) Using an ohmmeter, check that there is no continuity between terminals 3 and 4.

(c) Using an ohmmeter, check that there is continuity between terminals 3 and 5.

If operation is not as specified, replace the relay.

3. REINSTALL NO.2 COOLING FAN RELAY

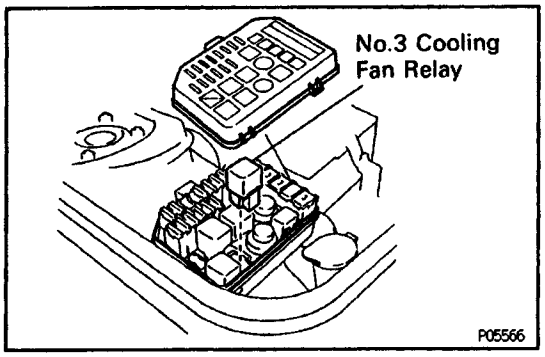

No.3 Cooling Fan Relay ("FAN NO.3") E04ZZ–01

NO.3 COOLING FAN RELAY INSPECTION

1. REMOVE NO.3 COOLING FAN RELAY

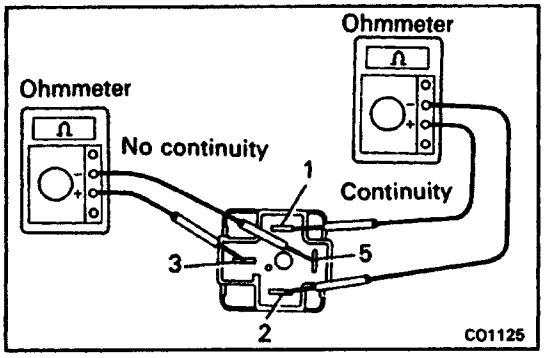

2. INSPECT NO–3 COOLING FAN RELAY

A. Inspect relay continuity

(a) Using an ohmmeter, check that there is continuity between terminals 1 and 2.

(b) Check that there is no continuity between terminals 3 and 5.

If continuity is not as specified, replace the relay.

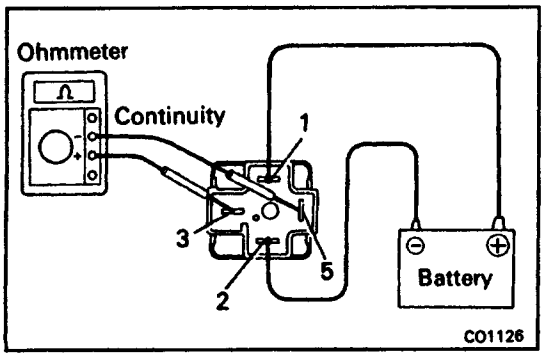

B. Inspect relay operation

(a) Apply battery voltage across terminals 1 and 2.

(b) Using an ohmmeter, check that there is continuity between terminals 3 and 5.

If operation is not as specified, replace the relay.

3. REINSTALL NO.3 COOLING FAN RELAY

RADIATOR

EG074–02

RADIATOR CLEANING

Using water or a steam cleaner, remove any mud and dirt from the radiator core.

NOTICE: If using a high pressure type cleaner, be careful not to deform the fins of the radiator core. If the cleaner nozzle pressure is 2,942 – 3,432 kPs (30 – 35 kgf/cm^2, 427 – 498 psi), keep a distance of at least 40 – 50 cm (15.75 – 19.69 in.) between the radiator core and cleaner nozzle.

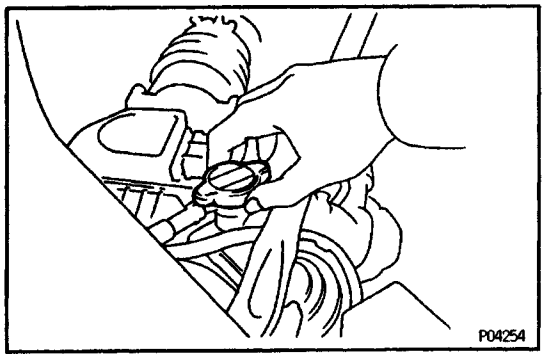

EG02L–01

RADIATOR INSPECTION

1. REMOVE RADIATOR (WATER FILLER) CAP

CAUTION: To avoid the danger of being burned, do not remove it while the engine and radiator are still hot, as fluid and steam can be blown out under pressure.

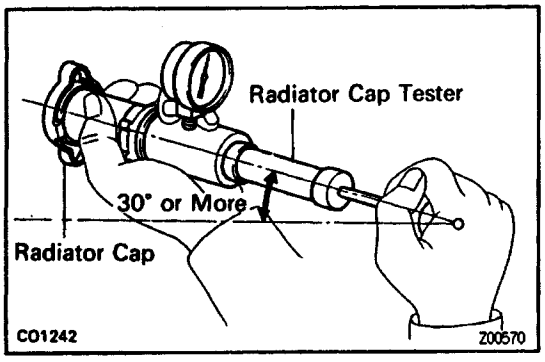

2. INSPECT RADIATOR (WATER FILLER) CAP

NOTICE: When performing steps (a) and (b) below, keep the radiator pump tester at an angle of over 30° above the horizontal.

(a) Using a radiator cap tester, slowly pump the tester and check that air is coming from the relief valve.

Pump speed:

1 push/3 seconds or more

NOTICE: Push the pump at a constant speed.

If air is not coming from the relief valve, replace the radiator cap.

(b) Pump the tester several times and measure the relief valve opening pressure.

Pump speed:

1 st time

1 push/1 second or less

2nd time or more
Any speed
Standard opening pressure:
74 – 103 kPa
(0.75 – 1.05 kgf/cm^2, 10.7 – 14.9 psi)
Minimum opening pressure:
59 kPa (o.6 kgf/cm^2, 8.5 psi)
If the opening pressure is less than minimum, replace the radiator cap.

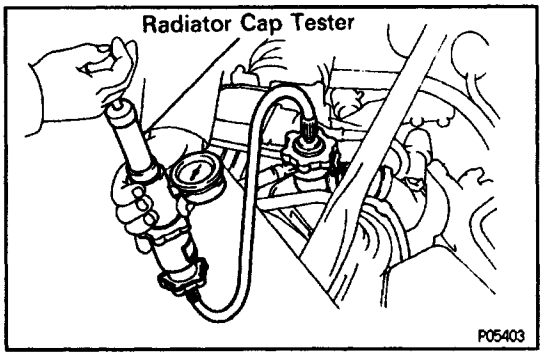

3. INSPECT COOLING SYSTEM FOR LEAKS
(a) Fill the radiator with coolant and attach a radiator cap tester to the water filler.
(b) Warm up the engine.
(c) Pump it to 118 kPa (1.2 kgf/cm^2, 17.1 psi), and check that the pressure does not drop.
If the pressure drops, check the hoses, radiator or water pump for leaks. If no external leaks are found, check the heater core, cylinder block and head.

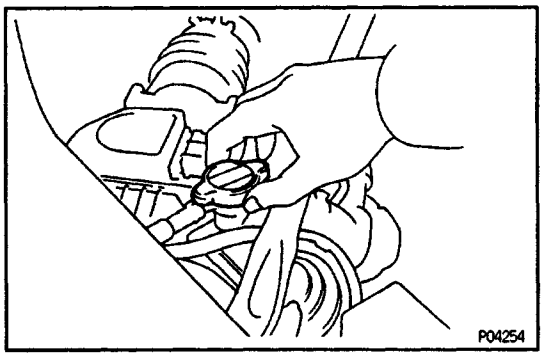

4. REINSTALL RADIATOR (WATER FILLER) CAP

COMPONENTS FOR REMOVAL AND INSTALLATION

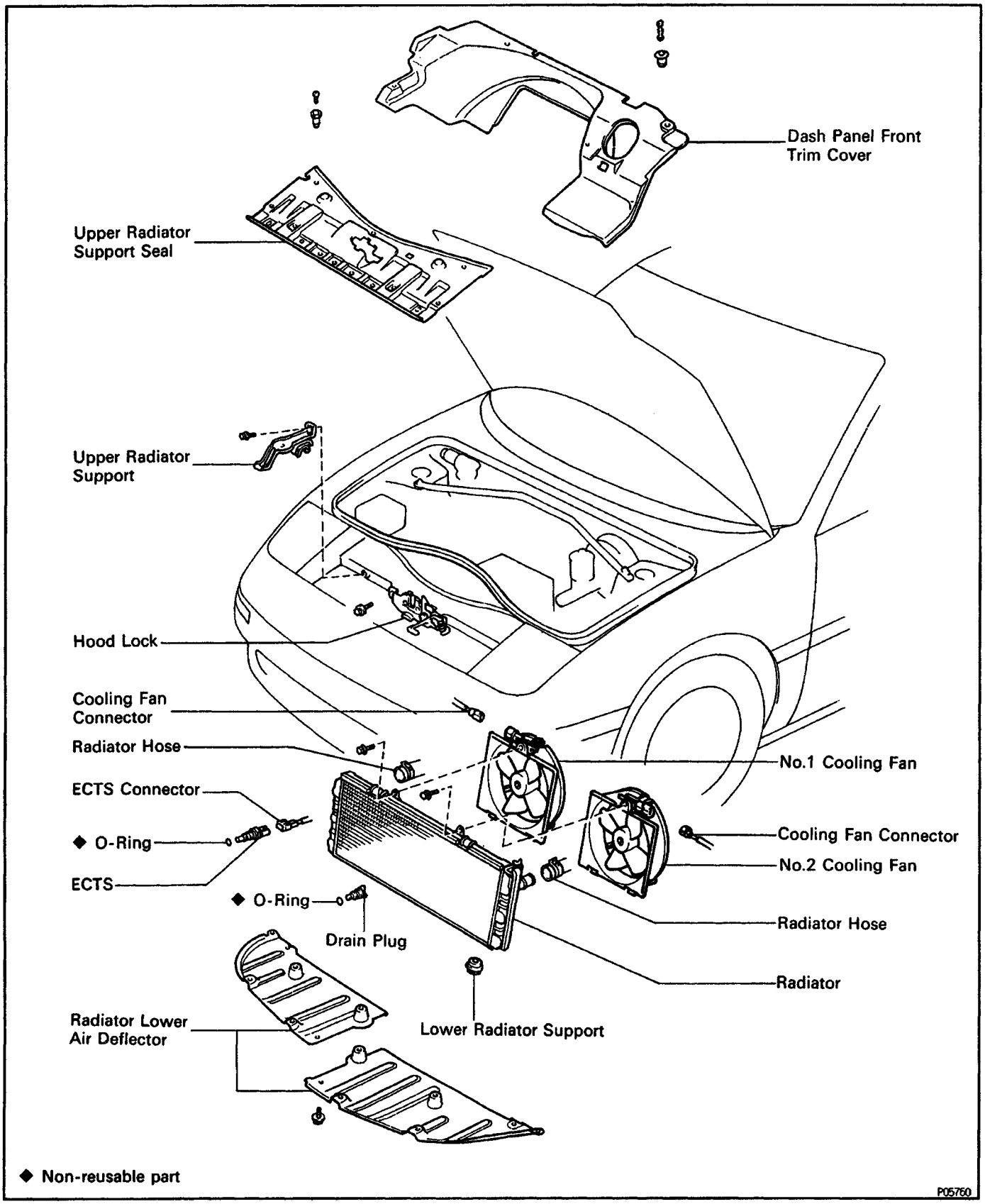

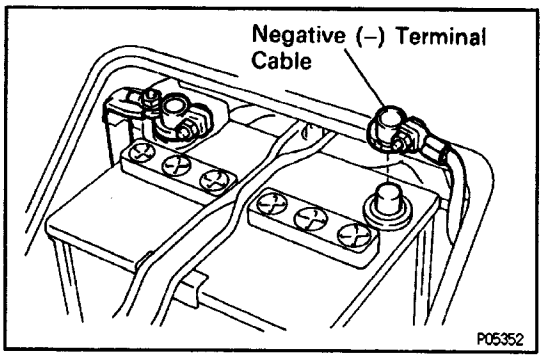

RADIATOR REMOVAL

(See Components for Removal and Installation)

1. DISCONNECT CABLE FROM NEGATIVE TERMINAL OF BATTERY

CAUTION: Turn the ignition switch to 'LOCK'. Disconnect the negative terminal from the battery. Wait at least 20 seconds before proceeding with work.

2. REMOVE RADIATOR LOWER AIR DEFLECTOR

3. DRAIN ENGINE COOLANT

4. REMOVE UPPER RADIATOR SUPPORT SEAL

(a) Disconnect the hood weatherstrip.

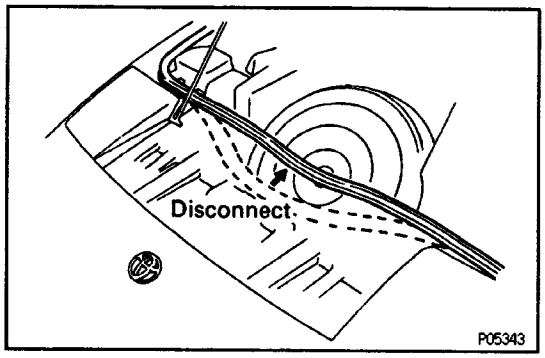

(b) Remove the seven clips.

(c) Remove the two hood lock mounting bolts, and remove the support seal.

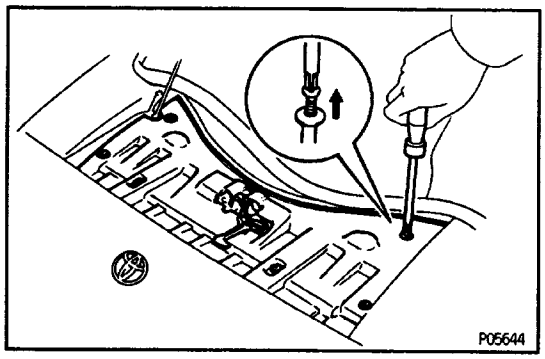

5. (w/ A/C)

REMOVE NO.1 AND NO.2 COOLING FANS

(a) Disconnect the two cooling fan connectors.

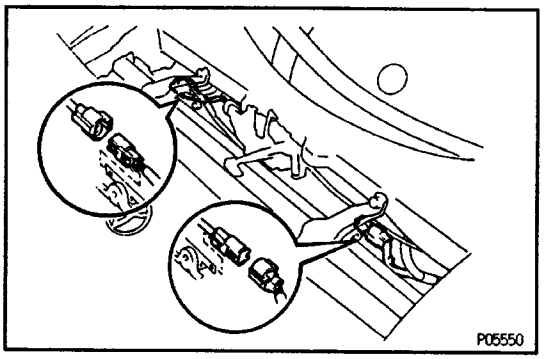

(b) Remove the three bolts and cooling fan. Remove the two cooling fans.

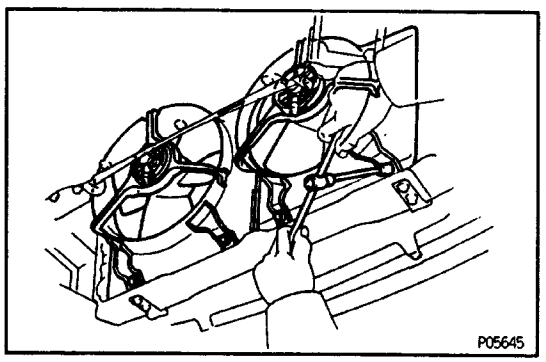

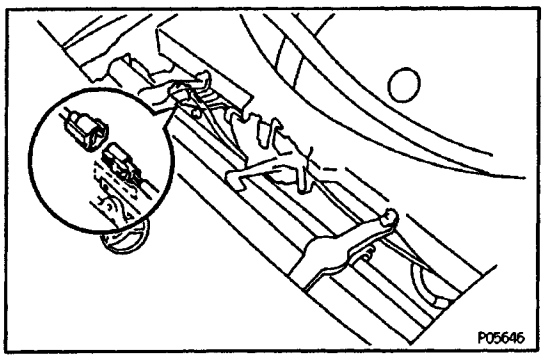

6. (w/o A/C)
REMOVE NO.1 COOLING FAN
(a) Disconnect the cooling fan connector.

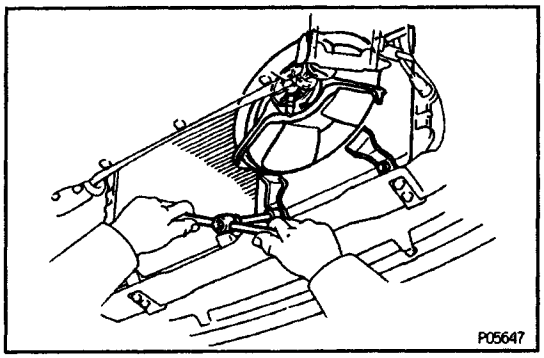

(b) Remove the three bolts and cooling fan.

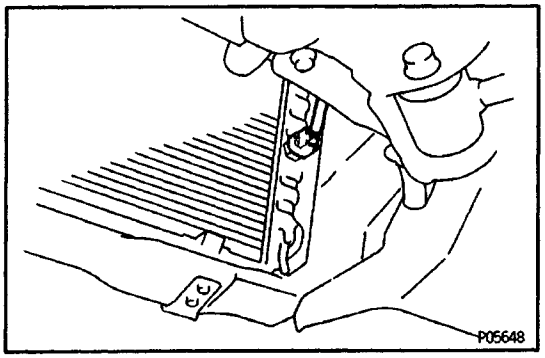

7. (w/ A/C)
DISCONNECT ECTS CONNECTOR
8. (w/o A/C)
DISCONNECT ENGINE COOLANT TEMPERATURE SWITCH CONNECTOR

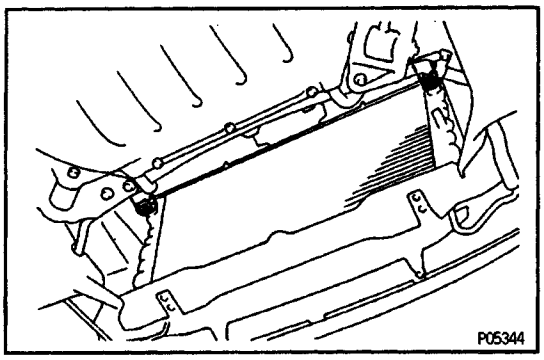

9. DISCONNECT RADIATOR HOSES

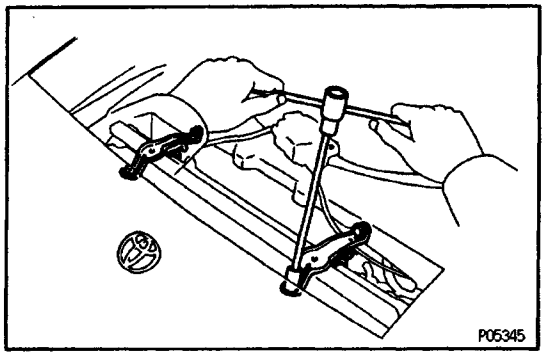

10. REMOVE RADIATOR
(a) Remove the two upper support bolts. Remove the two upper supports.

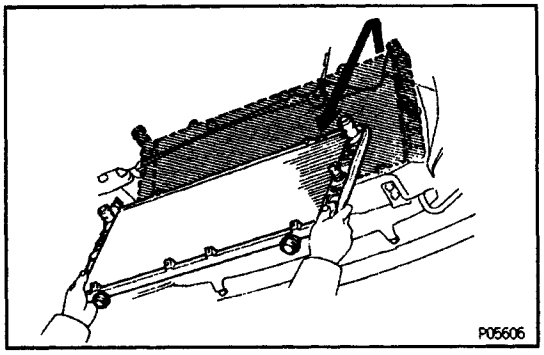

(b) Remove the radiator.
(c) Remove the two lower radiator supports.

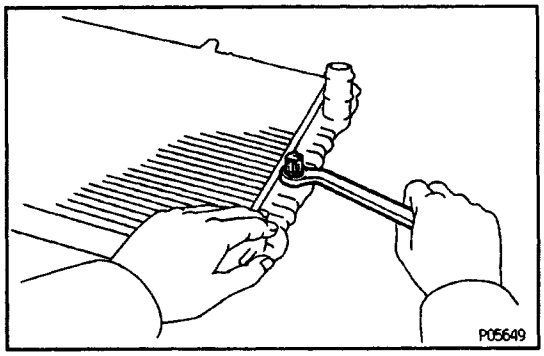

11. (w/ A/C)
REMOVE ECTS FROM RADIATOR
(a) Remove the ECTS.
(b) Remove the 0–ring from the ECTS.
12. (w/o A/C)
REMOVE ENGINE COOLANT TEMPERATURE SWITCH FROM RADIATOR
(a) Remove the temperature switch.
(b) Remove the 0–ring from the temperature switch.

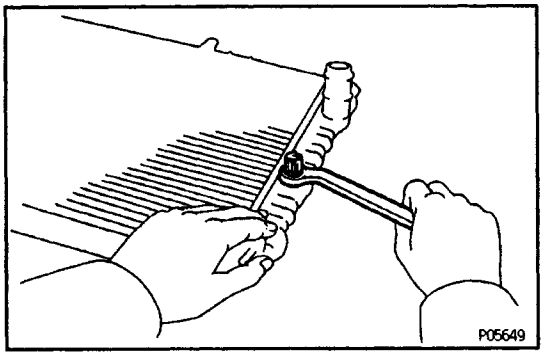

B016V–01

RADIATOR INSTALLATION

(See Components for Disassembly and Assembly)
1. (w/ A/C)
INSTALL ECTS TO RADIATOR
(a) Install a new O–ring to the ECTS.
(b) Install the ECTS.
2. (w/o A/C)
INSTALL ENGINE COOLANT TEMPERATURE SWITCH TO RADIATOR
(a) Install a O–ring to the temperature switch.
(b) Install the temperature switch.

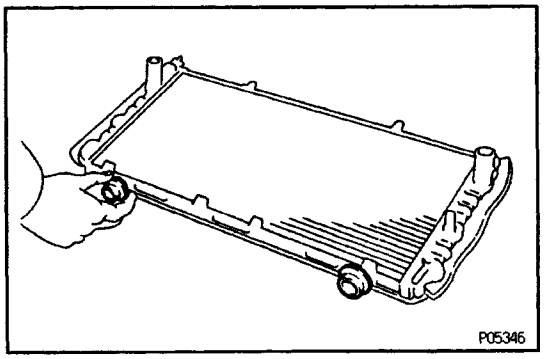

3. INSTALL RADIATOR
(a) Install the two lower radiator supports to the radiator.

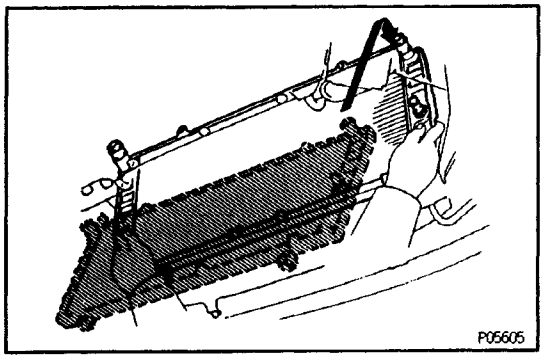

(b) Place the radiator in position on the body.

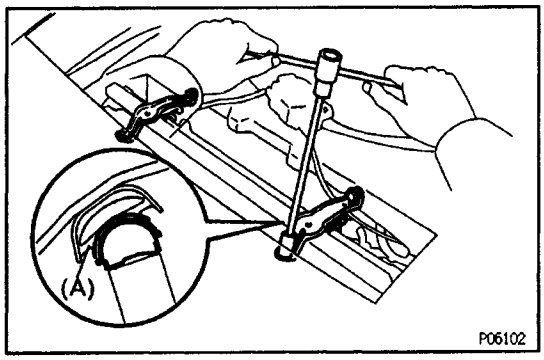

(c) Install the upper radiator support. Install the two upper supports.
Torque: 13 N–m (130 kgf–cm, 9 ft–lbf)
HINT: After installation, check that the rubber cushion (A) of the support is not depressed.

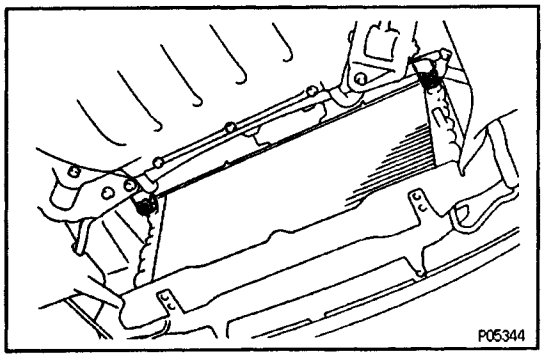

4. CONNECT RADIATOR HOSES

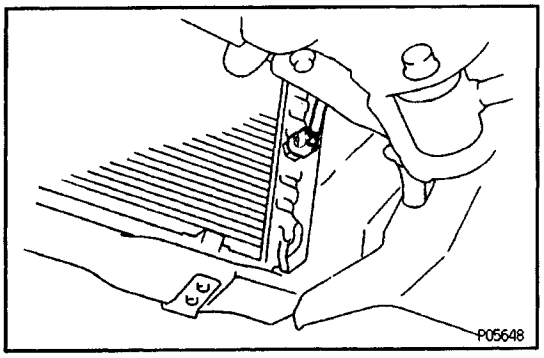

5. (w/ A/C)
CONNECT ECTS CONNECTOR
6. (w/o A/C)
CONNECT ENGINE COOLANT TEMPERATURE SWITCH CONNECTOR

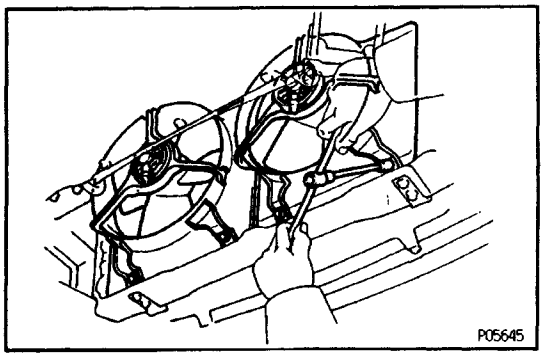

7. (w/ A/C)
INSTALL NO.1 AND NO.2 COOLING FANS
(a) Install the cooling fan with the three bolts. Install the two cooling fans.

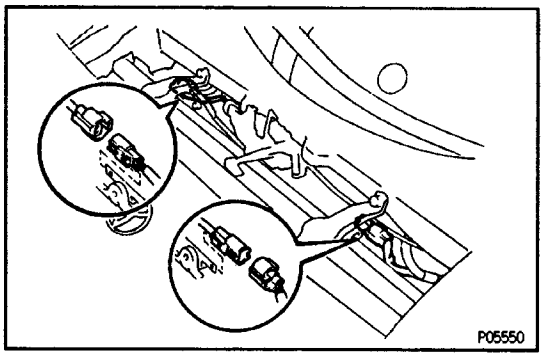

(b) Connect the two cooling fan connectors.

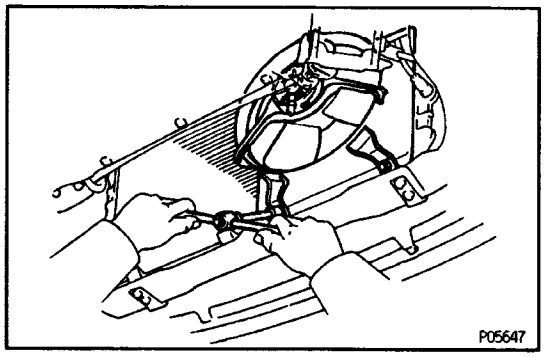

8. (w/o A/C)
INSTALL NO.1 COOLING FAN
(a) Install the cooling fan with the three bolts.

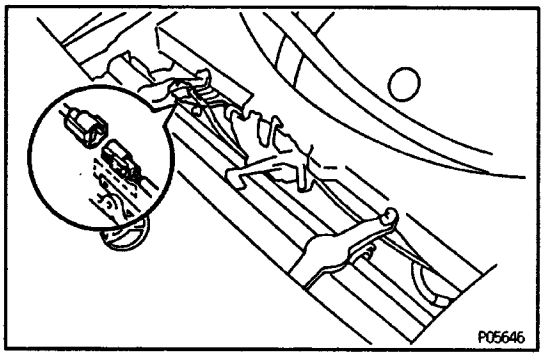

(b) Connect the cooling fan connector.

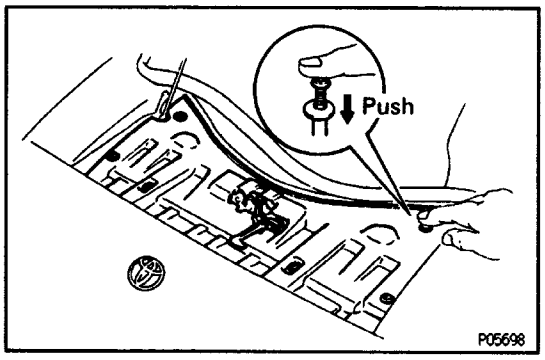

9. INSTALL UPPER RADIATOR SUPPORT SEAL
(a) Temporarily install the hood lock with the RH side bolt.
(b) Place the support seal in position.
(c) Install the hood lock with the two bolts.
(d) Install the seven clips.

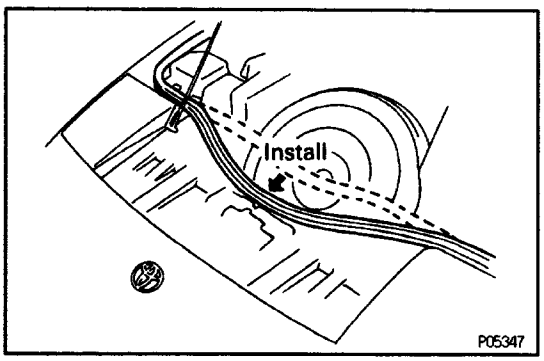

(e) Install the hood weatherstrip.
10. INSTALL RADIATOR LOWER AIR DEFLECTOR
11. FILL WITH ENGINE COOLANT
12. CONNECT CABLE TO NEGATIVE TERMINAL OF BATTERY
13. START ENGINE AND CHECK FOR COOLANT LEAKS

SERVICE SPECIFICATIONS

EG07L–03

SERVICE DATA

Thermostat	Valve opening temperature Valve lift (at 95* C (203˚ F))	80 – 84 C (176 – 183˚ F) 8 mm (0.31 in.) or more
Radiator cap	Relief valve opening pressure (STD) Relief valve opening pressure (Limit)	74 – 103 kPa (0.75 – 1.05 kgf/cm^2, 10.7 – 14.9 psi) 59 kPa (0.6 kgf/cm^2, 8.5 psi)
Radiator electric cooling fan	Rotating amperage	5.8 – 7.4 A
Engine compartment cooling fan	Rotating amperage	3.1 – 4.3 A
ECTS	Resistance (at 85˚ C (185˚ F)) Resistance (at 90˚ C (194˚ F)) Resistance (at 95* C (203˚ F))	Approx. 1.35 kΩ Approx. 1.19 kΩ Approx. 1.05 kΩ
Engine compartment temp.sensor	Resistance (at 20˚ C (68˚ F)) Resistance (at 57.5˚ C (135.5˚ F)) Resistance (at 80˚C (176˚F))	Approx. 2.45 kΩ Approx. 0.63 kΩ Approx. 0.32 kΩ

EG07M–03

TORQUE SPECIFICATIONS

Part tightened	N–m	kgf .cm	ft–lbf
Cylinder block x Drain plug	**25**	250	**18**
Radiator pipe x Drain plug	**17**	170	**12**
Water inlet x Water pump cover	7.8	**80**	69 in.–lbf
Water pump x Water pump cover	9.3	**95**	82 in.–lbf
Water pump x Cylinder block (10 mm head)	7.8	**80**	69 in.–lbf
Water pump x Cylinder block (12 mm head)	**27**	275	20 in.–lbf
Water by–pass pipe x Water pump cover	**12**	120	9 ft–lbf
No.2 idler pulley x Cylinder block	**43**	440	**32**
Water inlet x Water pump	7.8	**80**	69 in.–lbf
Upper radiator support x Body	**13**	130	**9**

THERMOSTAT

E0GZH–01

COMPONENTS FOR REMOVAL AND INSTALLATION

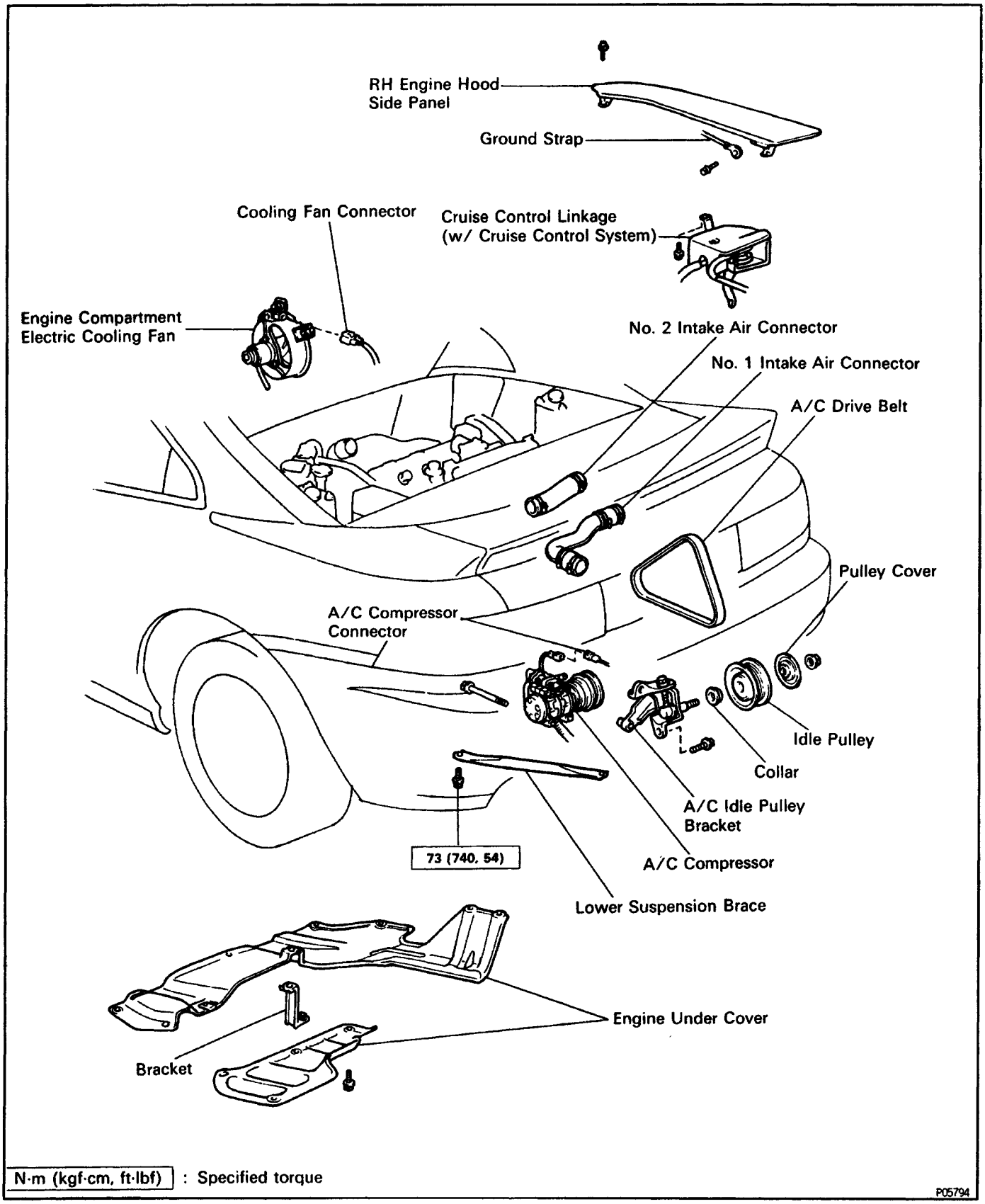

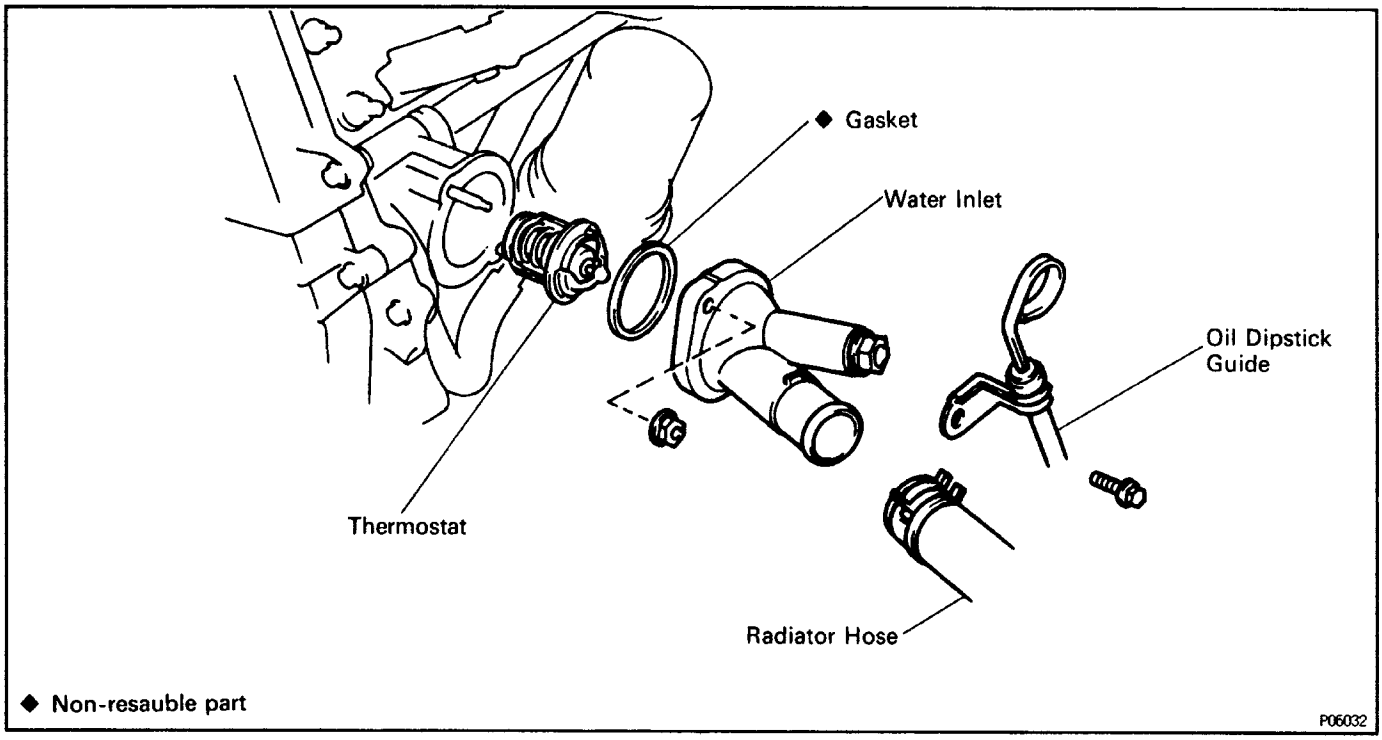

EG0ZJ–01

THERMOSTAT REMOVAL

(See Components for Removal and Installation)

HINT: Removal of the thermostat would have an adverse effect, causing a lowering of cooling efficiency. Do not remove the thermostat, even if the engine tends to overheat.

1. DISCONNECT A/C COMPRESSOR FROM ENGINE (See steps 1, 2, 4, 7, 9 and 10 in Timing Belt Removal under Engine Mechanical)

2. DRAIN ENGINE COOLANT

3. DISCONNECT RADIATOR HOSE FROM WATER INLET

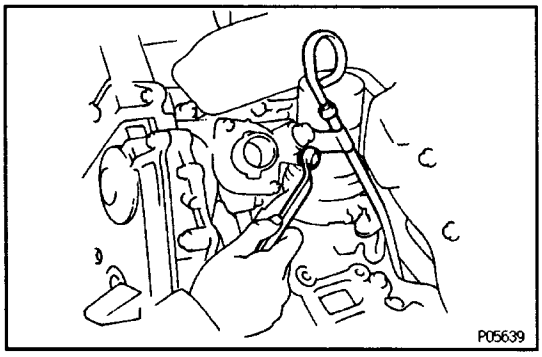

4. DISCONNECT OIL DIPSTICK GUIDE FROM WATER INLET

Remove the bolt, and disconnect the dipstick guide from the water inlet.

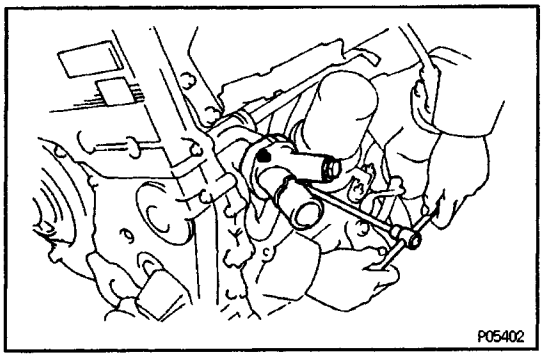

5. REMOVE WATER INLET AND THERMOSTAT

(a) Remove the two nuts and water inlet from the water pump cover.
(b) Remove the thermostat.
(c) Remove the gasket from the thermostat.

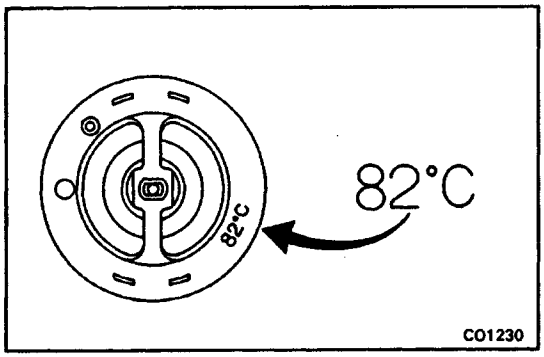

EG072–01

THERMOSTAT INSPECTION

INSPECT THERMOSTAT

HINT: The thermostat is numbered with the valve opening temperature.

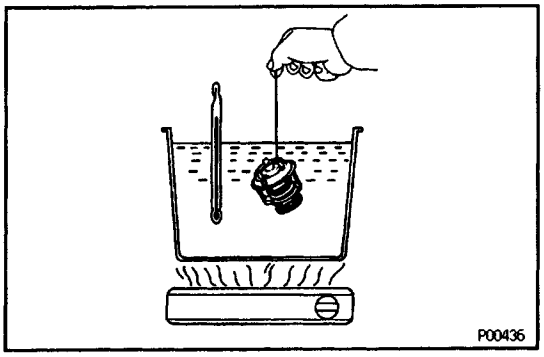

(a) Immerse the thermostat in water and gradually heat the water.
(b) Check the valve opening temperature.

Valve opening temperature:

80–84°C (176–183°F)

If the valve opening temperature is not as specified, replace the thermostat.

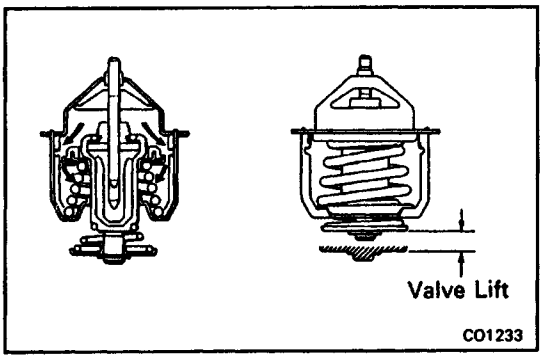

(c) Check the valve lift.

Valve lift:

8 mm (0.31 in.) or more at 95° C (203° F)

If the valve lift is not as specified, replace the thermostat.
(d) Check that the valve spring is tight when the thermostat is fully closed.

If not closed, replace the thermostat.

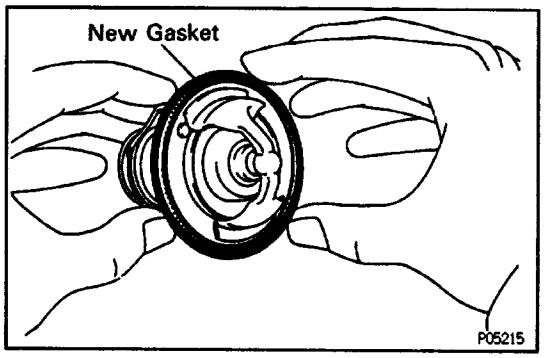

THERMOSTAT INSTALLATION

B002X–01

(See Components for Removal and Installation)

1. PLACE THERMOSTAT IN WATER PUMP

(a) Install a new gasket to the thermostat.

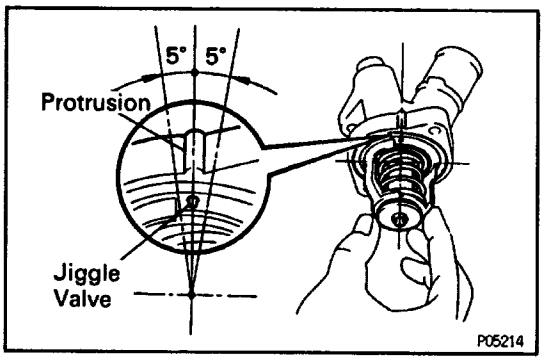

(b) Align the jiggle valve of the thermostat with the protrusion of the water inlet, and insert the thermostat in the water inlet.

HINT: The jiggle valve may be set within 5° of either side of the prescribed position.

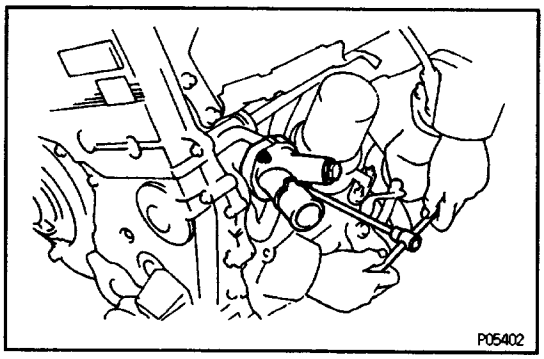

2. INSTALL WATER INLET AND THERMOSTAT

Install the water inlet and thermostat with the two nuts.

Torque: 7.8 N–m (80 kgf–cm, 69 in.–lbf)

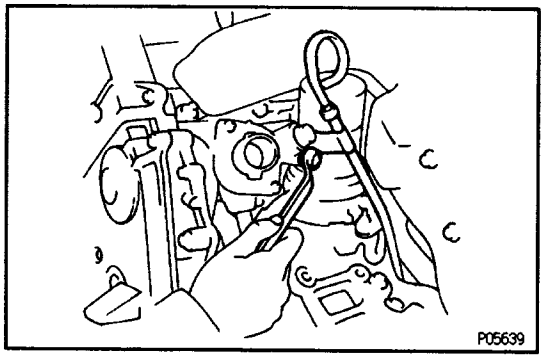

3. INSTALL OIL DIPSTICK GUIDE TO WATER INLET

Install the dipstick guide with the bolt.

4. CONNECT RADIATOR HOSE TO WATER INLET

5. INSTALL A/C COMPRESSOR

(See steps 27, 28, 30, 33, 35 and 36 in Timing Belt Installation under Engine Mechanical)

6. FILL WITH ENGINE COOLANT

7. START ENGINE AND CHECK FOR COOLANT LEAKS

WATER PUMP

EGQZE–01

COMPONENTS FOR REMOVAL AND INSTALLATION

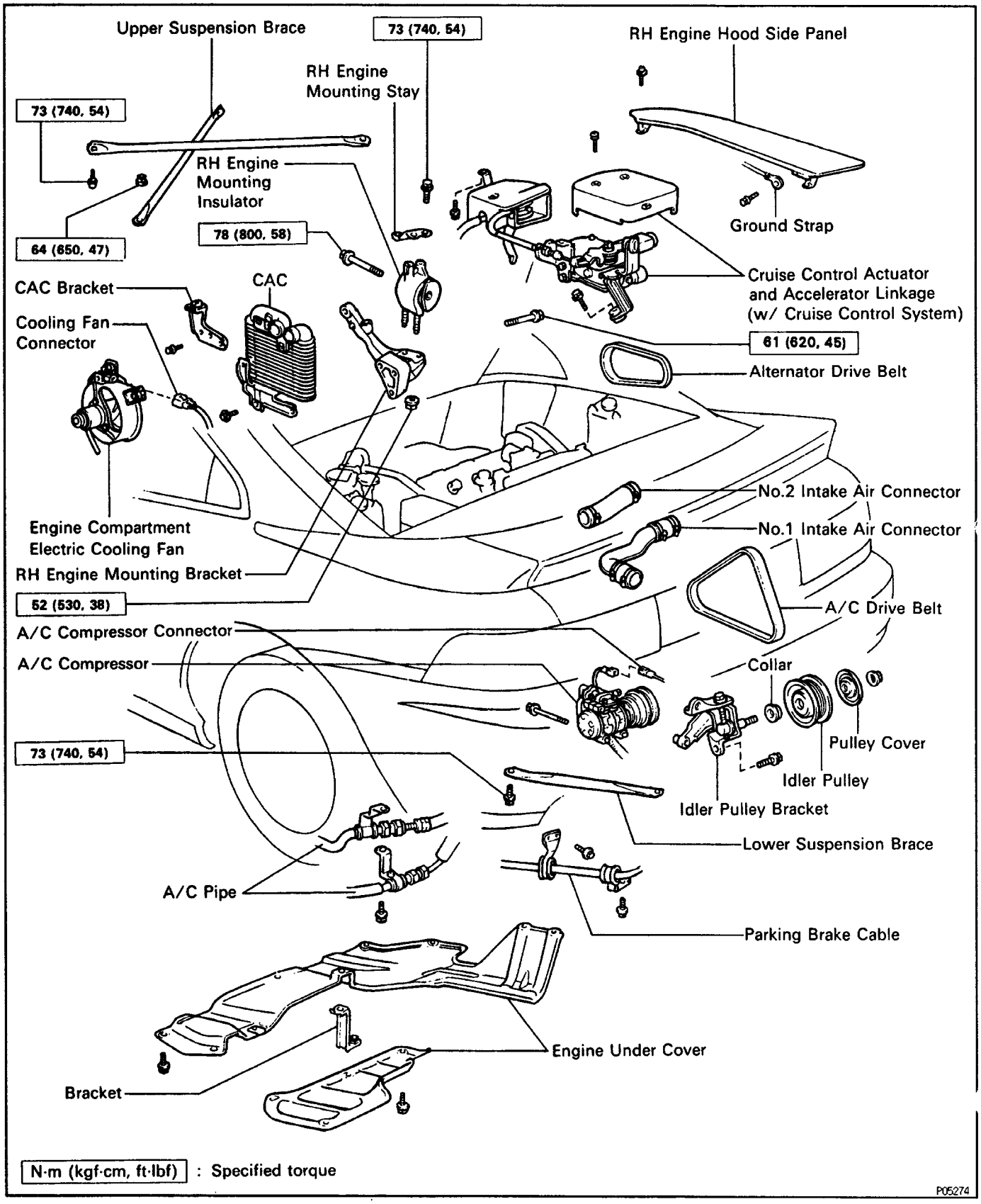

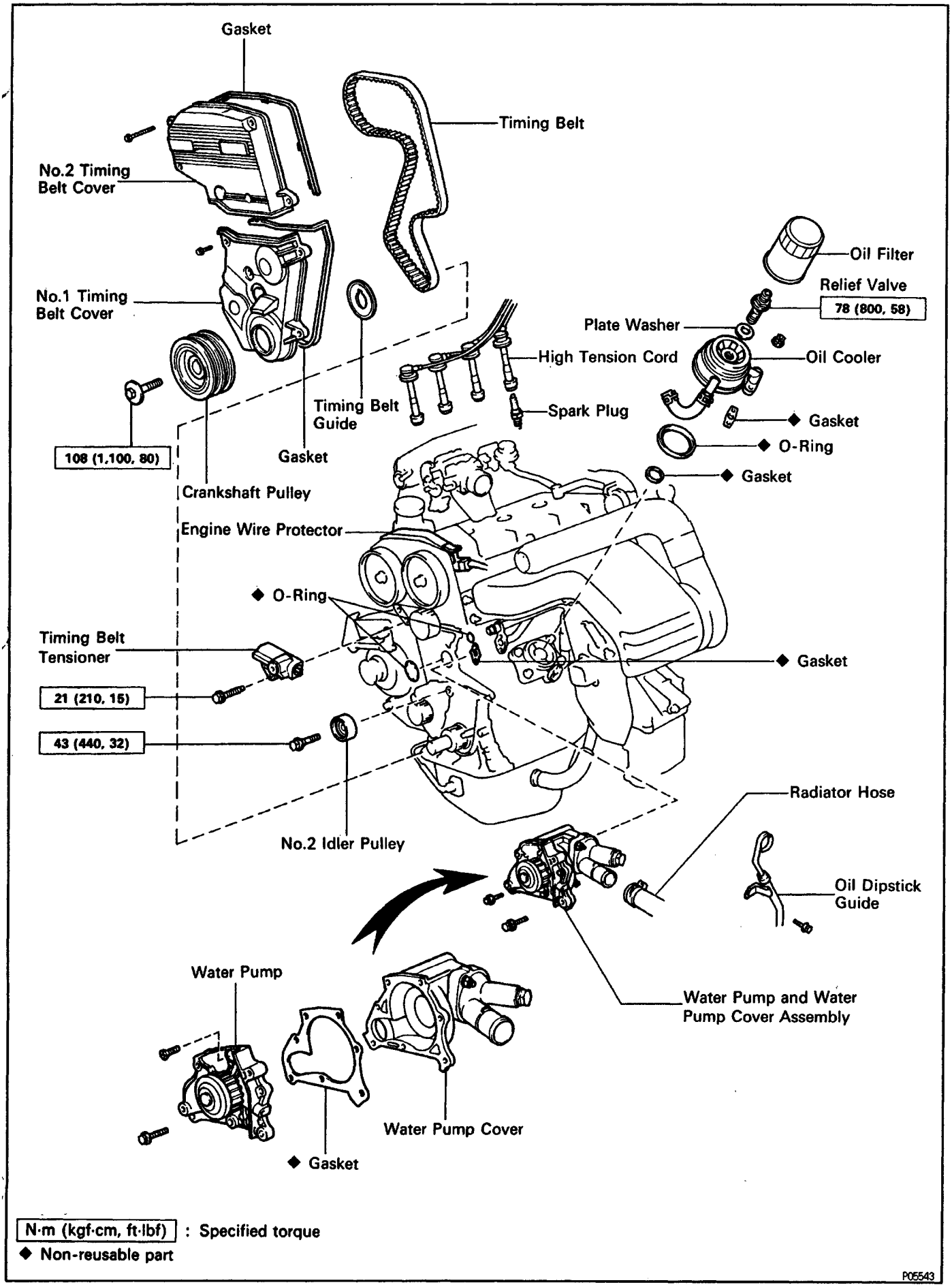
Gasket
Timing Belt
No.2 Timing Belt Cover
No.1 Timing Belt Cover
Oil Filter
Relief Valve
78 (800, 58)
Plate Washer
High Tension Cord
Oil Cooler
Timing Belt Guide
Spark Plug
◆ Gasket
◆ O-Ring
108 (1,100, 80)
Gasket
◆ Gasket
Crankshaft Pulley
Engine Wire Protector
◆ O-Ring
Timing Belt Tensioner
◆ Gasket
21 (210, 15)
43 (440, 32)
No.2 Idler Pulley
Radiator Hose
Oil Dipstick Guide
Water Pump
Water Pump and Water Pump Cover Assembly
Water Pump Cover
◆ Gasket
N·m (kgf·cm, ft·lbf) : Specified torque
◆ Non-reusable part
P05543

B0427F–01

WATER PUMP REMOVAL

(See Components for Removal and Installation)

1. DRAIN ENGINE COOLANT

2. REMOVE TIMING BELT

(See steps 1 to 26 and 28 to 31 in Timing Belt Removal under Engine Mechanical)

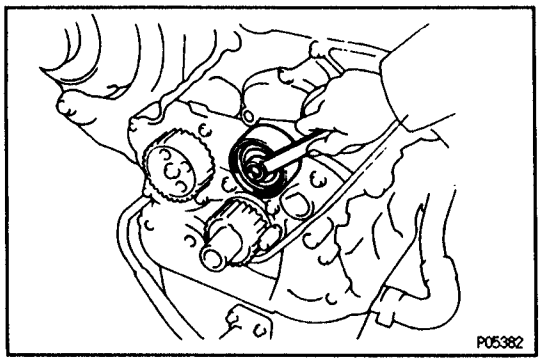

3. REMOVE NO.2 IDLER PULLEY

Remove the bolt and pulley.

4. DISCONNECT RADIATOR HOSE FROM WATER OUTLET

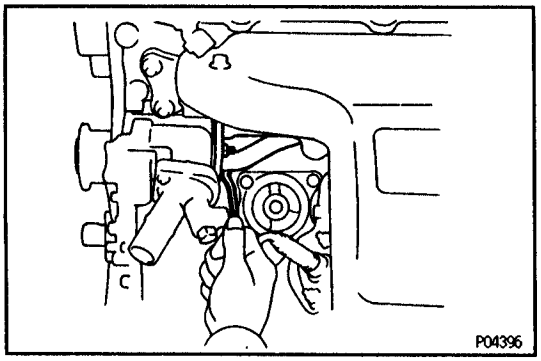

5. REMOVE WATER PUMP AND WATER PUMP COVER ASSEMBLY

(a) Remove the two nuts holding the water pump to the water by–pass pipe.

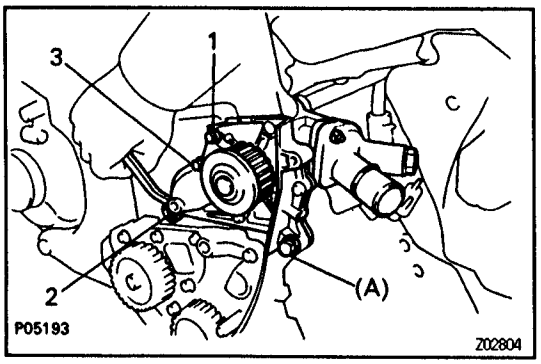

(b) (w/o A/C)

Remove the bolt (A).

(c) Remove the three bolts in the sequence shown.

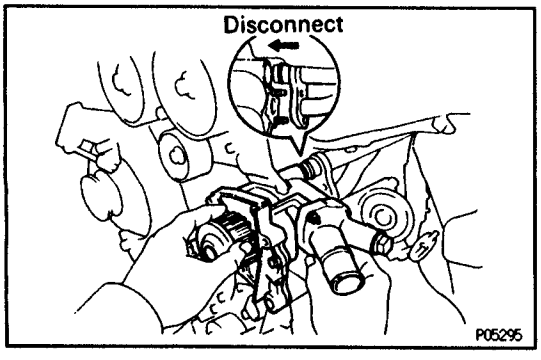

(d) Disconnect the water pump cover from the water by –pass pipe, and remove the water pump and water pump cover assembly.

(e) Remove the gasket and two O–rings from the water pump and water by–pass pipe.

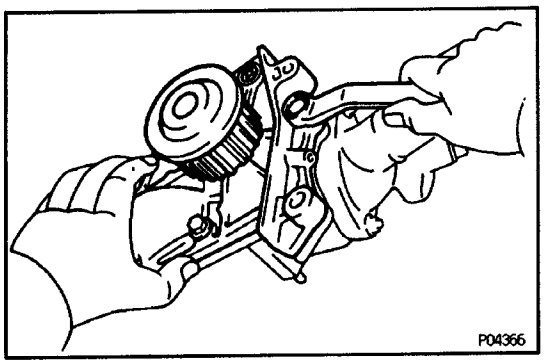

6. REMOVE WATER PUMP FROM WATER PUMP COVER

Remove the screw, two bolts, water pump and gasket.

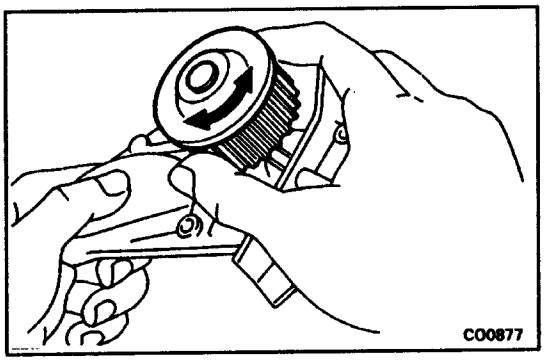

S300Z–01

WATER PUMP INSPECTION

INSPECT WATER PUMP

Turn the pulley and check that the water pump bea–ring moves smoothly and quietly.

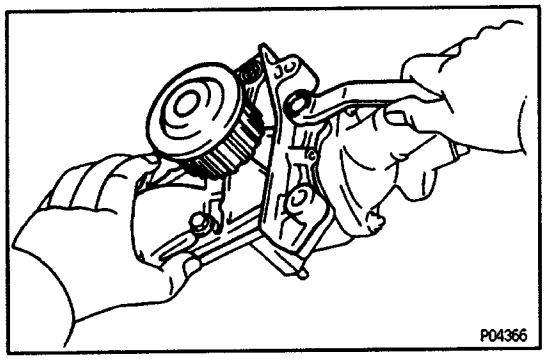

S302G–01

WATER PUMP INSTALLATION

(See Components for Removal and Installation)

1. INSTALL WATER PUMP TO WATER PUMP COVER

Install a new gasket and the water pump with the screw and two bolts.

Torque: 9.3 N–m (95 kgf–cm, 82 in.–lbf)

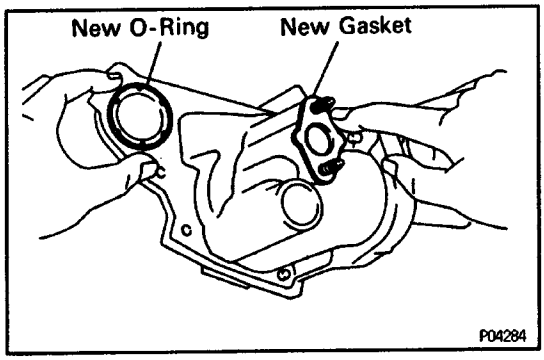

2. INSTALL WATER PUMP AND WATER PUMP COVER ASSEMBLY

(a) Install new O–ring and gasket to the water pump cover.

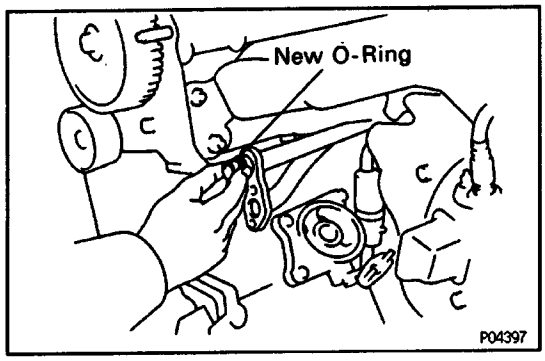

(b) Instal a new O–ring to the water by–pass pipe.

(c) Apply soapy water to the O–ring on the water by–pass pipe.

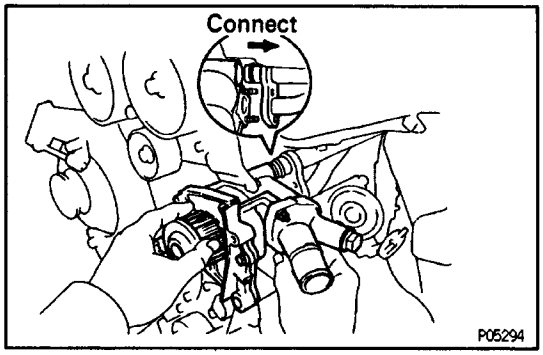

(d) Connect the water pump cover to the water by–pass pipe. Do not install the nuts yet.

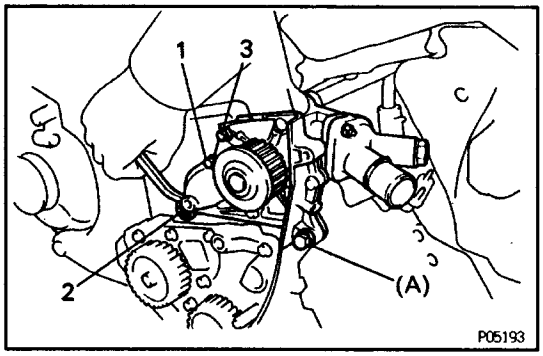

(e) Install the water pump with the three bolts. Tighten the bolts in the sequence shown.
Torque: 7.8 N–m (80 kgf–cm, 69 in–lbf)

(f) (w/o A/C)
Install the bolt (A).
Torque: 27 N–m (275 kgf–cm, 20 ft–lbf)

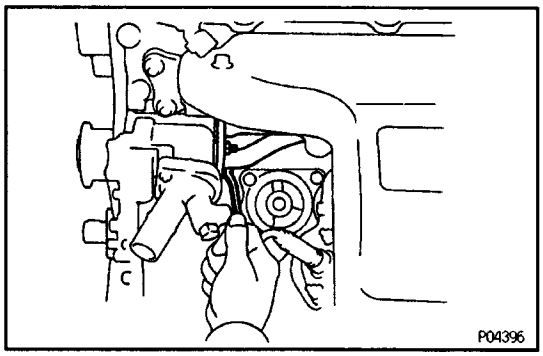

(g) Install the two nuts holding the water pump cover to the water by–pass pipe.
Torque: 12 N–m (120 kgf–cm, 9 ft–lbf)

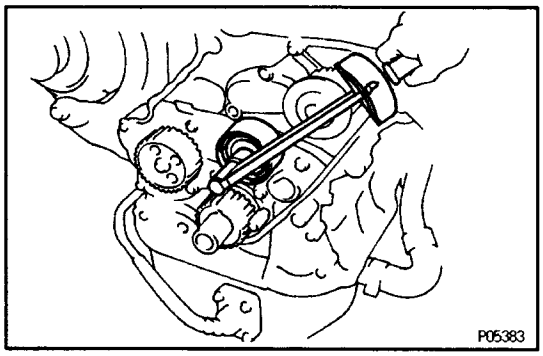

3. INSTALL NO.2 IDLER PULLEY

(a) Install the pulley with the bolt.
Torque: 43 N–m (440 kgf–cm, 32 ft–lbf)

(b) Check that the idler pulley moves smoothly.

4. CONNECT LOWER RADIATOR HOSE TO WATER INLET

5. INSTALL TIMING BELT
(See steps 3. 5 to 8 to 36 in Timing Belt Installation under Engine Mechanical)

6. FILL WITH ENGINE COOLANT

7. START ENGINE AND CHECK FOR COOLANT LEAKS

EXHAUST GAS RECIRCULATION (EGR) SYSTEM

EG088–02

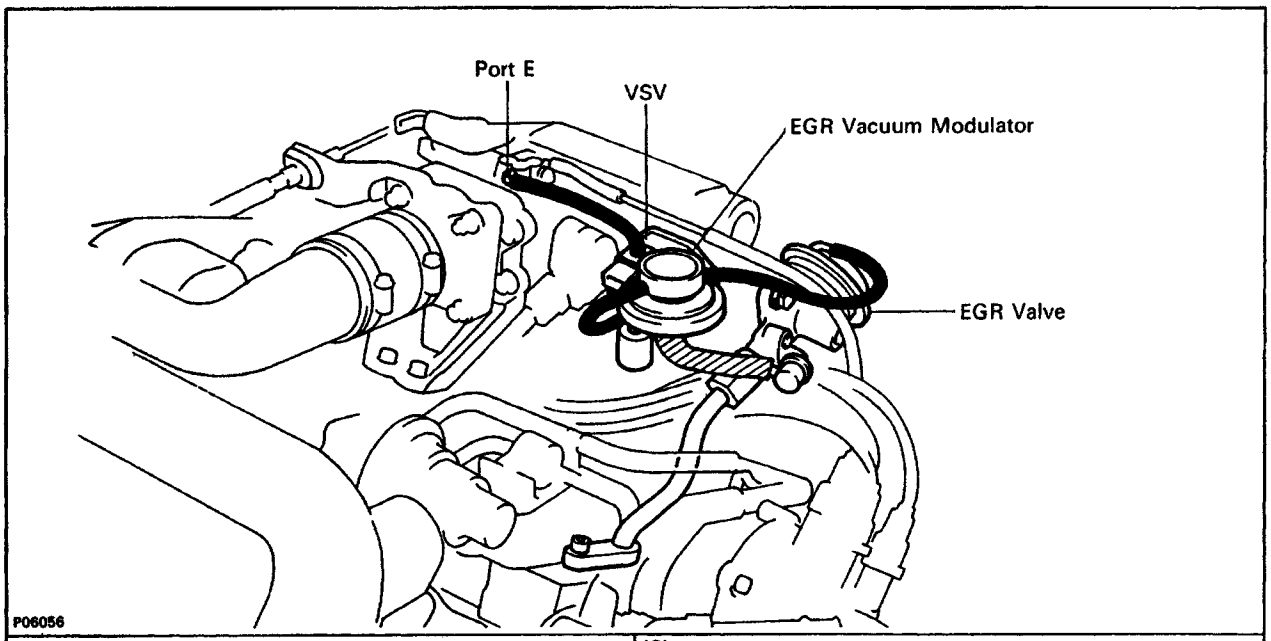

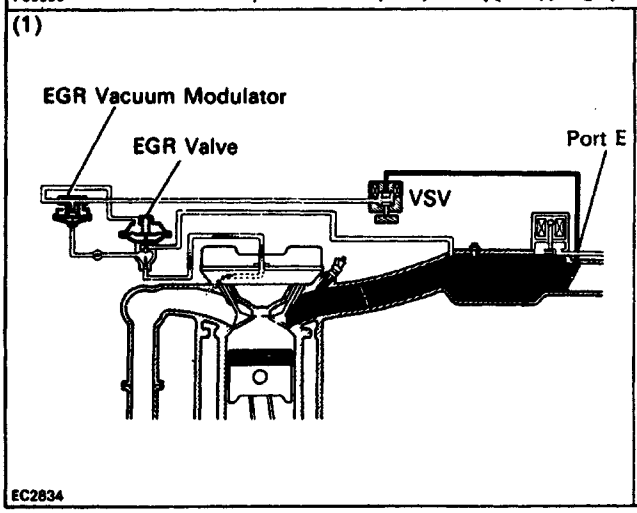

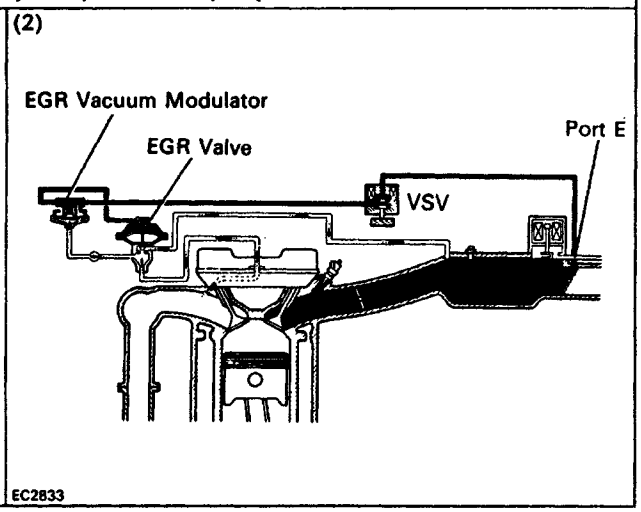

To reduce NOx emissions, part of the exhaust gases is recirculated through the EGR valve to the intake manifold to lower the maximum combustion temperature.

Coolant temp.	VSV	Throttle Valve Opening Angle	Pressure in the EG R Valve Pressure Chamber		EGR Vacuum Modulator	EG R Valve	Exhaust Gas
Below 54°C (129°F)	CLOSED	–	–		–	CLOSED	Not recirculated
Above 60°C (140° F)	OPEN	Positioned above port E	(1)	–	–	CLOSED	Not recirculated
		Positioned .below port E	(2)	•	CLOSED passage to atmosphere	OPEN	Recirculated (increase)

Remarks: When the throttle valve is positioned above the port E, the EGR vacuum modulator will close the atmosphere passage and open the EGR valve to increase the EGR gas, even if the exhaust pressure is insufficiently low.

V00969

EG0XD–01

EGR SYSTEM INSPECTION

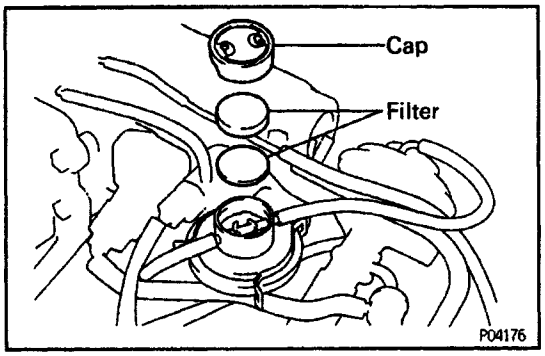

1. INSPECT AND CLEAN FILTER IN EGR VACUUM MODULATOR

(a) Remove the cap and two filters.
(b) Check the filter for contamination or damage.
(c) Using compressed air, clean the filter.
(d) Reinstall the two filters and cap.

HINT: Install the filter with the coarser surface facing the atmospheric side (outward).

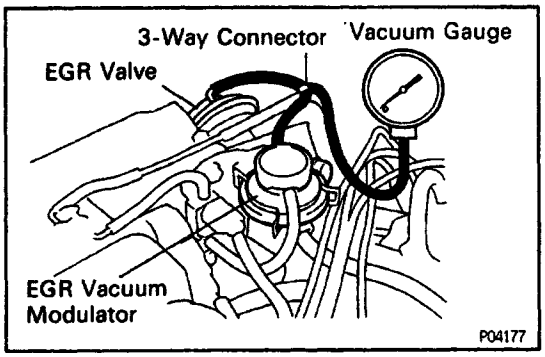

2. INSTALL VACUUM GAUGE

Using a 3–way connector, connect a vacuum gauge to the hose between the EGR valve and vacuum modulator.

3. INSPECT SEATING OF EGR VALVE

Start the engine and check that the engine starts and runs at idle.

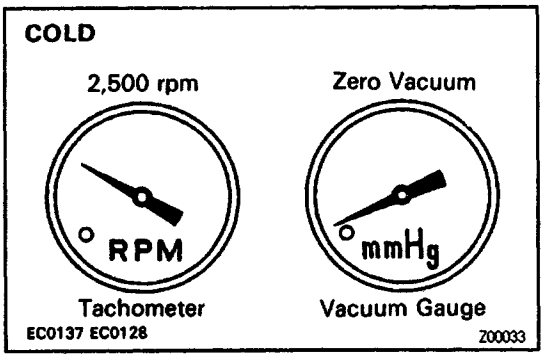

4. INSPECT VSV OPERATION WITH COLD ENGINE

(a) The coolant temperature should be below 54°C (129°F).
(b) Check that the vacuum gauge indicates zero at 2,500 rpm.

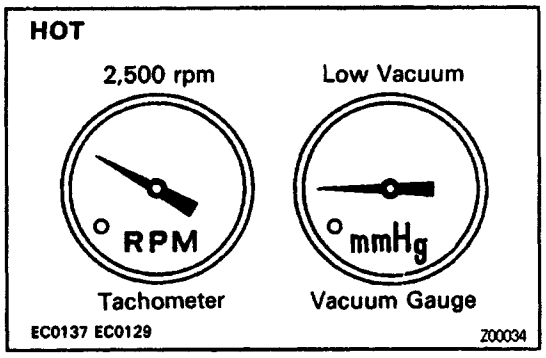

5. INSPECT VSV OPERATION WITH HOT ENGINE

(a) Warm up the engine to above 60°C (140°F).
(b) Check that the vacuum gauge indicates low vacuum at 2,500 rpm.

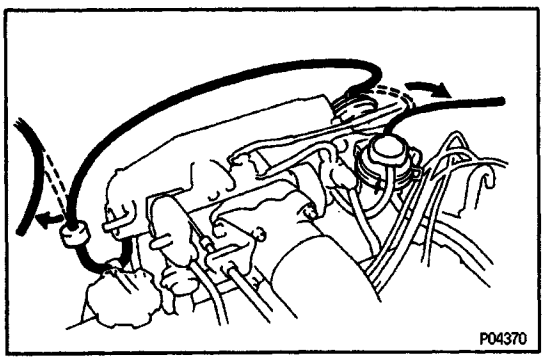

6. INSPECT EGR VALVE

(a) Apply vacuum directly to the EGR valve with the engine idling.
(b) Check that the engine runs rough or dies.
(c) Reconnect the vacuum hoses to the proper locations.

IF NO PROBLEM IS FOUND WITH THIS INSPECTION, SYSTEM IS NORMAL; OTHERWISE INSPECT EACH PART

EG0XE–01

VSV INSPECTION

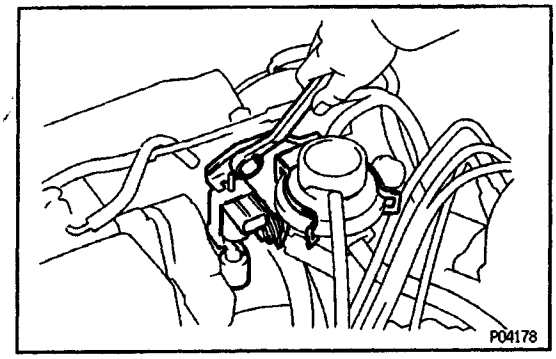

1. REMOVE VSV

(See VSV Removal under SMPI System)

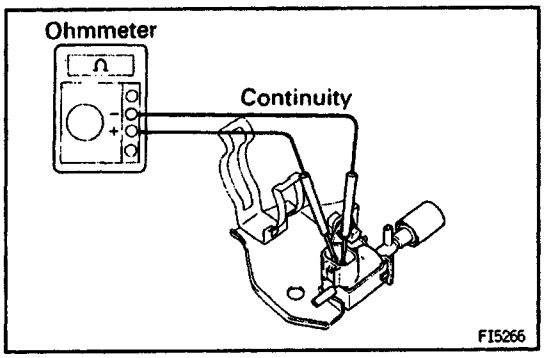

2. INSPECT VSV

A. Inspect VSV for open circuit .

Using an ohmmeter, check that there is continuity between the terminals.

Resistance (Cold):

33–39 Ω

If there is no continuity, replace the VSV.

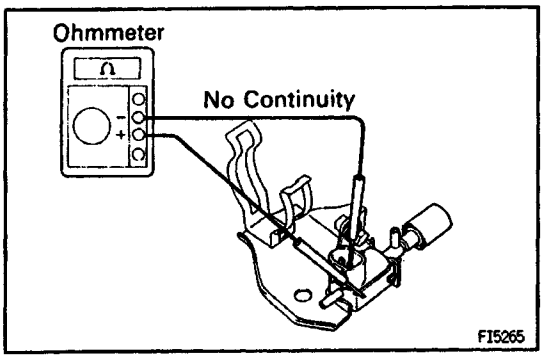

B. Inspect VSV for ground

Using an ohmmeter, check that there is no continuity between each terminal and the body.

If there is continuity, replace the VSV.

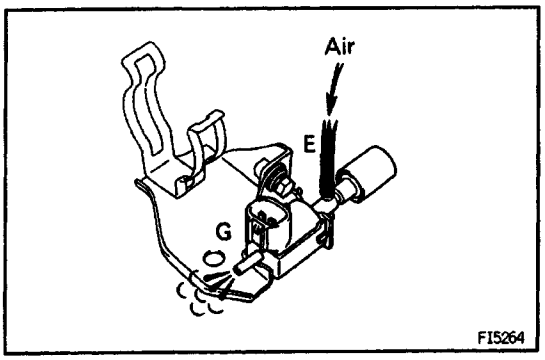

C. Inspect VSV operation

(a) Check that the air flows from port E to port G.

(b) Apply battery voltage across the terminals.

(c) Check that the air flows from port E to the filter.

If operation is not as specified, replace the VSV.

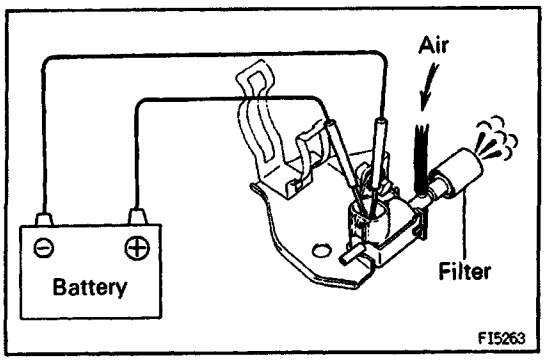

3. REINSTALL VSV

(See VSV Removal under SMPI System)

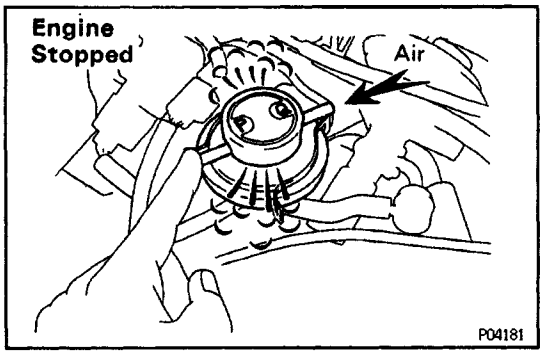

E0011–01

EGR VACUUM MODULATOR INSPECTION

INSPECT EGR VACUUM MODULATOR OPERATION

(a) Disconnect the vacuum hoses from ports P and Q of the EGR vacuum modulator.
(b) Block port one side with your finger.
(c) Blow air into another port, and check that the air passes through to the air filter side freely.

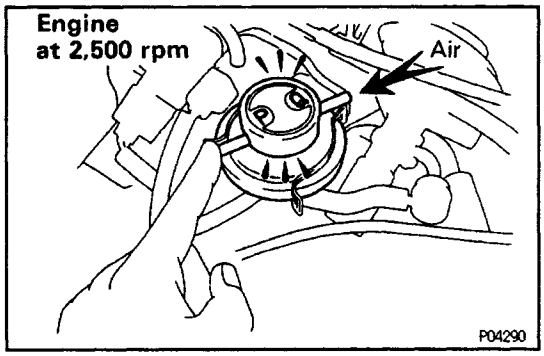

(d) Start the engine, and maintain speed at 2,500 rpm.
(e) Repeat the above test. Check that there is a strong resistance to air flow.
(f) Reconnect the vacuum hoses to the proper locations.

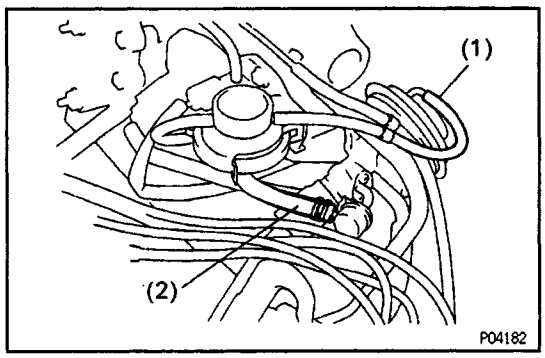

EGOXF–01

EGR VALVE INSPECTION

1. REMOVE EGR VALVE

(a) (CALIF. only)
Disconnect the EGR function sensor connector.
(b) Disconnect the following hoses from the EGR valve:
(1) Vacuum hose (from vacuum modulator)
(2) EGR hose (from vacuum modulator)

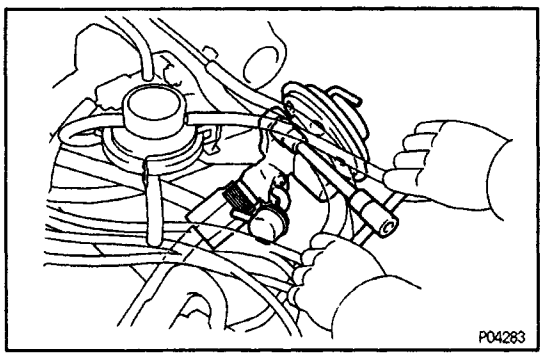

(c) Loosen the union nut, and Remove the two bolts, EGR valve and gasket.

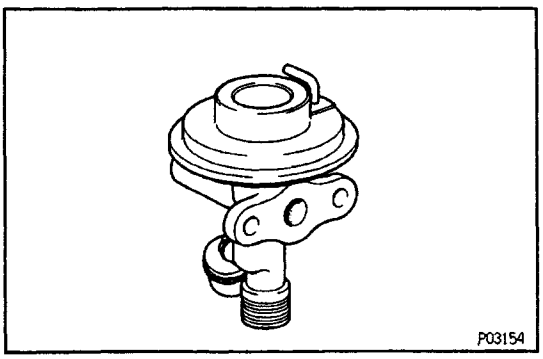

2. INSPECT EGR VALVE

Check for sticking and heavy carbon deposits.
If a problem is found, replace the valve.

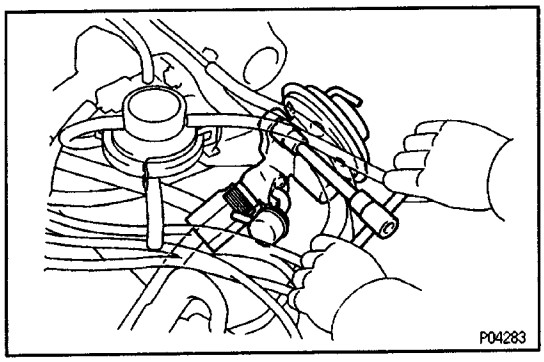

3. REINSTALL EGR VALVE

(a) Install a new gasket and the EGR valve with the union nut and two bolts.

Torque:

19 N–m (195 kgf–cm, 19 ft–lbf) for bolt

59 N–m (600 kgf–cm, 43 ft–lbf) for union nut

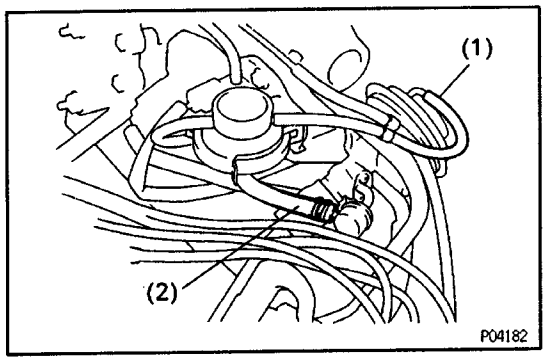

(b) Connect the following hoses to the EGR valve:

(1) Vacuum hose (from vacuum modulator)

(2) EGR hose (from vacuum modulator)

(c) (CALIF. only)

Reconnect the EGR function sensor connector.

FUEL EVAPORATIVE SYSTEM (EVAP)

EG063–02

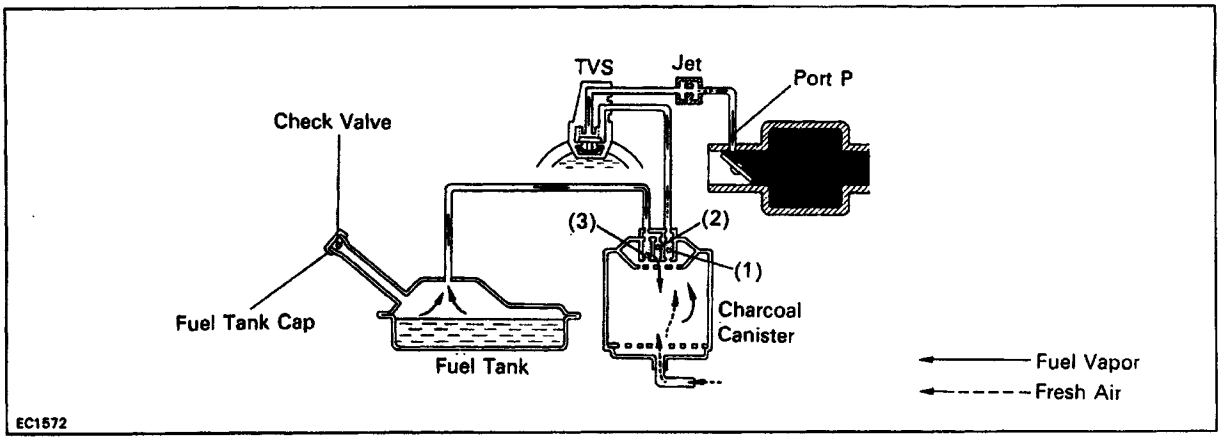

To reduce HC emission, evaporated fuel from the fuel tank is routed through the charcoal canister to the intake manifold for combustion in the cylinders.

Coolant Temp.	TVS	Throttle Valve Opening	Canister Check Valve (1)	(2)	(3)	Check valve in Cap	Evaporated Fuel (HC)
Below 35°C (95°F)	CLOSED	–	–	–	–	–	HC from tank is absorbed into the canister.
Above 54°C (129°F)	OPEN	Positioned below port P	CLOSED	–	–	–	
		Positioned above port P	OPEN	–	–	–	HC from canister is led into air intake chamber.
High pressure in tank	–	–	–	OPEN	CLOSED	CLOSED	HC from tank is absorbed into the canister.
High vacuum in take	–	–	–	CLOSED	OPEN	OPEN	Air is led into the fuel tank.

V00968

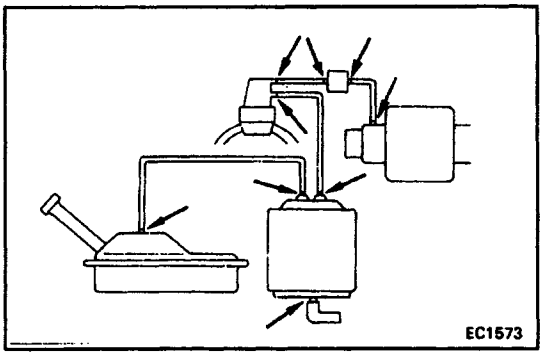

EG064–02

FUEL VAPOR LINES, FUEL TANK AND TANK CAP INSPECTION

1. VISUALLY INSPECT LINES AND CONNECTIONS

Look for loosen connections, sharp bends or damage.

2. VISUALLY INSPECT FUEL TANK

Look for deformation, cracks or fuel leakage.

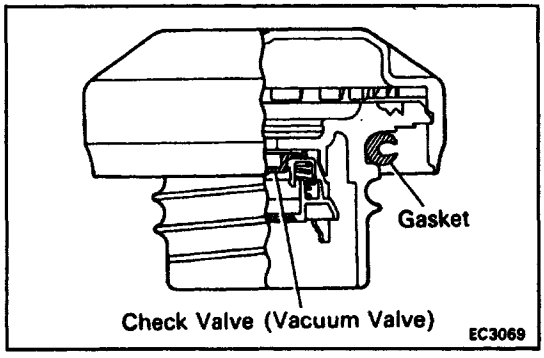

3. VISUALLY INSPECT FUEL TANK CAP

Check if the cap and /or gasket are deformed or damaged.

If necessary, repair or replace the cap.

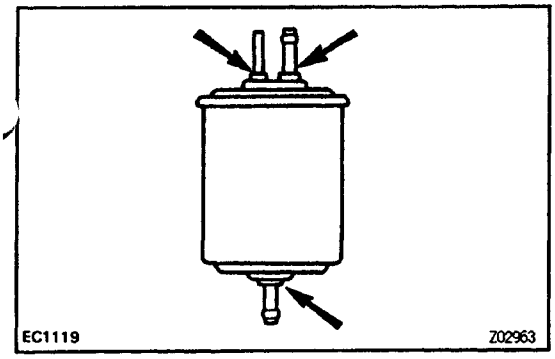

CHARCOAL CANISTER INSPECTION

EG0XB–01

1. REMOVE CHARCOAL CANISTER

2. REMOVE CAP FROM CHARCOAL CANISTER

3. VISUALLY INSPECT CHARCOAL CANISTER

Lock for cranks or damage.

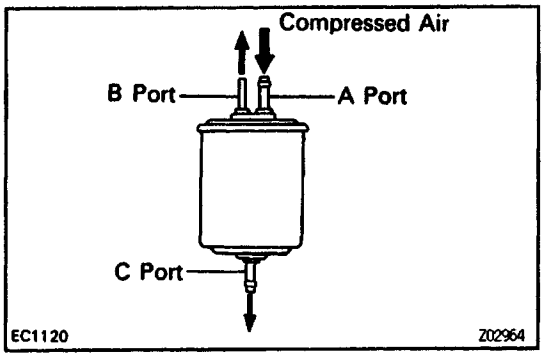

4. CHECK FOR CLOGGED FILTER AND STUCK CHECK VALVE

(a) Using low pressure compressed air, blow into port A and check that air flows without resistance from the other ports.

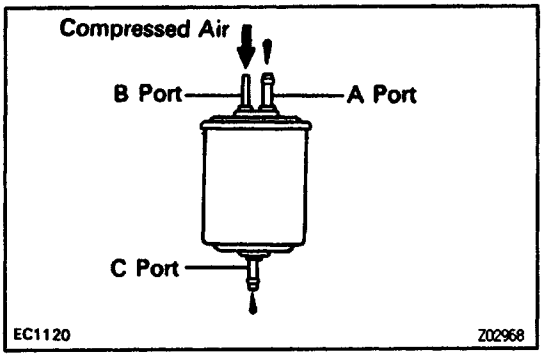

(b) Blow into port Band check that air does not flow from the other ports.

If operation is not as specified, replace the charcoal canister.

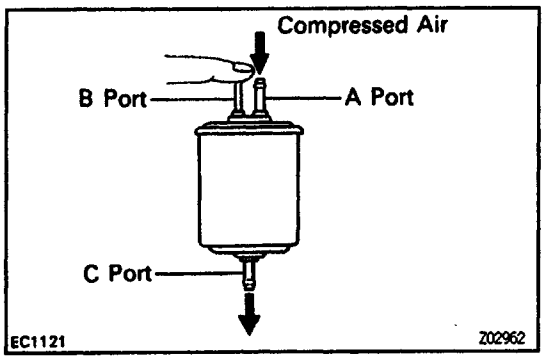

5. CLEAN FILTER IN CANISTER

Clean the filter by blowing 294 kPa (3 kgf/cm2, 43 psi) of compressed air into port A while holding port B closed.

NOTICE:

- **Do not attempt to wash the canister.**
- **No activated carbon should come out.**

6. REINSTALL CAP TO CHARCOAL CANISTER

7. REINSTALL CHARCOAL CANISTER

EG0XC–01

TVS INSPECTION

1. DRAIN ENGINE COOLANT

2. REMOVE TVS FROM WATER OUTLET

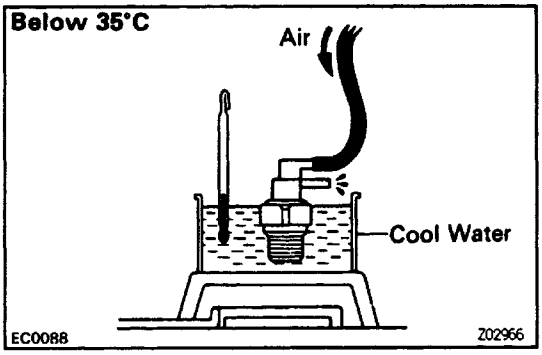

3. INSPECT TVS OPERATION

(a) Cool the TVS to below 35° C (95° F) with cool water.

(b) Check that air does not flow from the upper port to lower port.

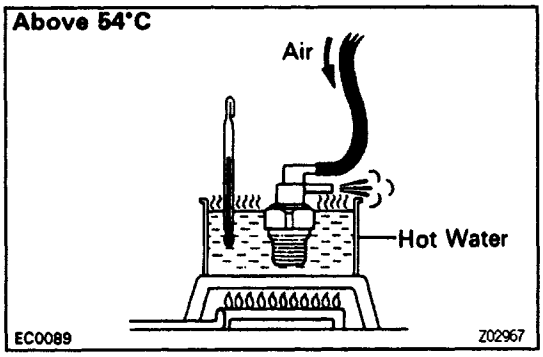

(c) Heat the TVS to above 54°C (129°F) with hot water.

(d) Check that air flows from the upper port to lower port.

If operation is not as specified, replace the TVS.

4. REINSTALL TVS

Apply adhesive to two or three threads of the TVS, and install it.

Adhesive:

Part No. 08833–00070, THREE BOND 1324 or equivalent

Torque: 29 N–m (300 kgf–cm, 22 ft–lbf)

5. REFILL WITH ENGINE COOLANT

EG067–02

JET INSPECTION

1. REMOVE JET

2. INSPECT JET

Blow air from each side of the jet, and check for stoppage.

If operation is not as specified, replace the jet.

3. REINSTALL JET

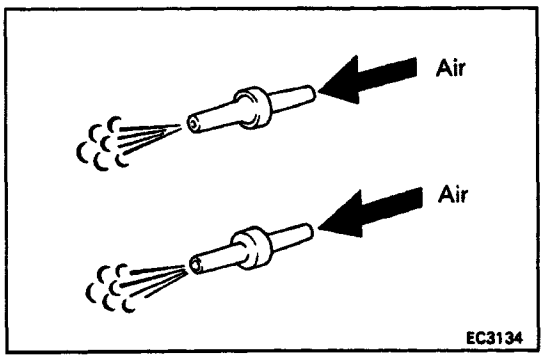

LAYOUT AND SCHEMATIC DRAWING

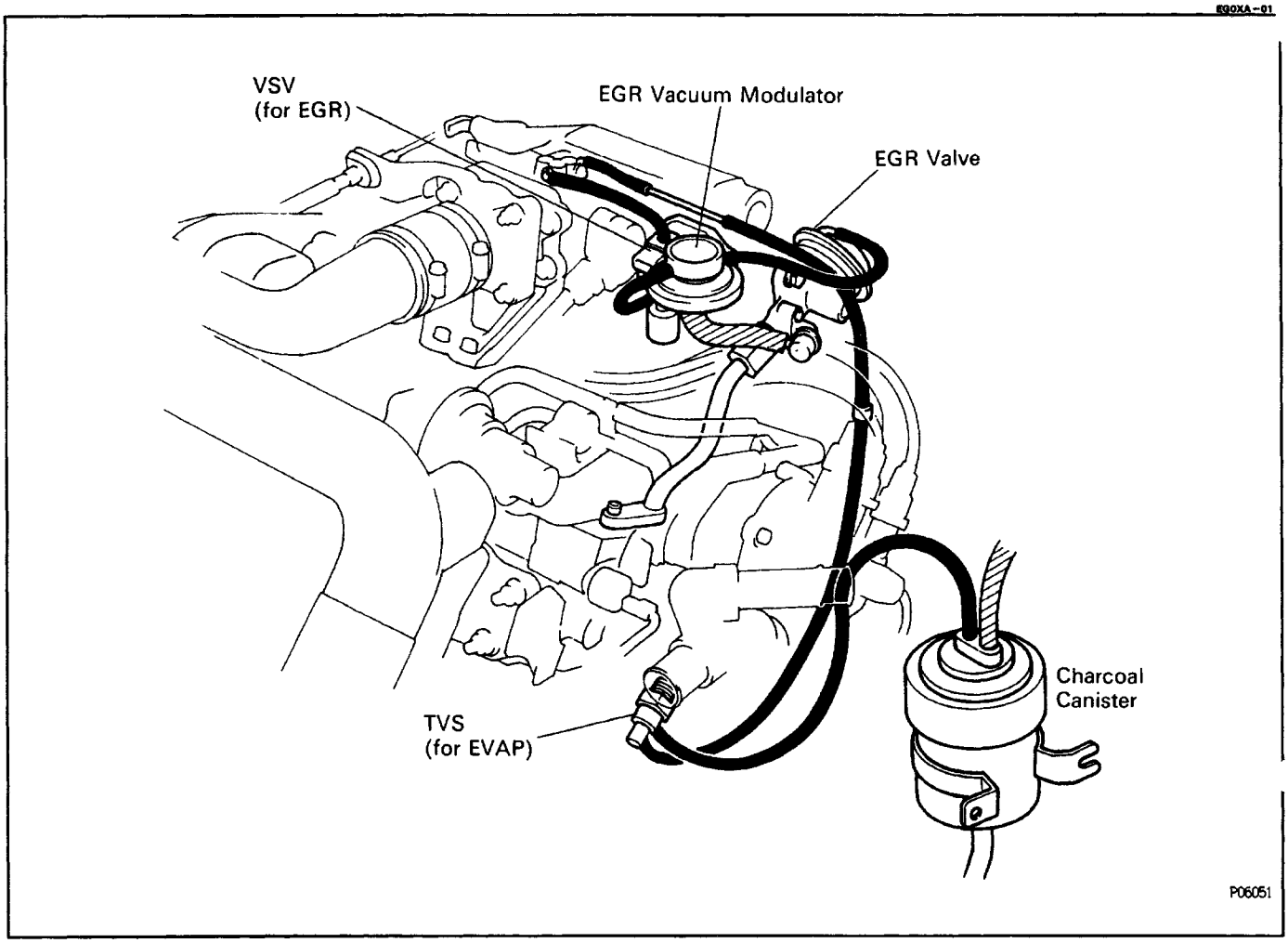

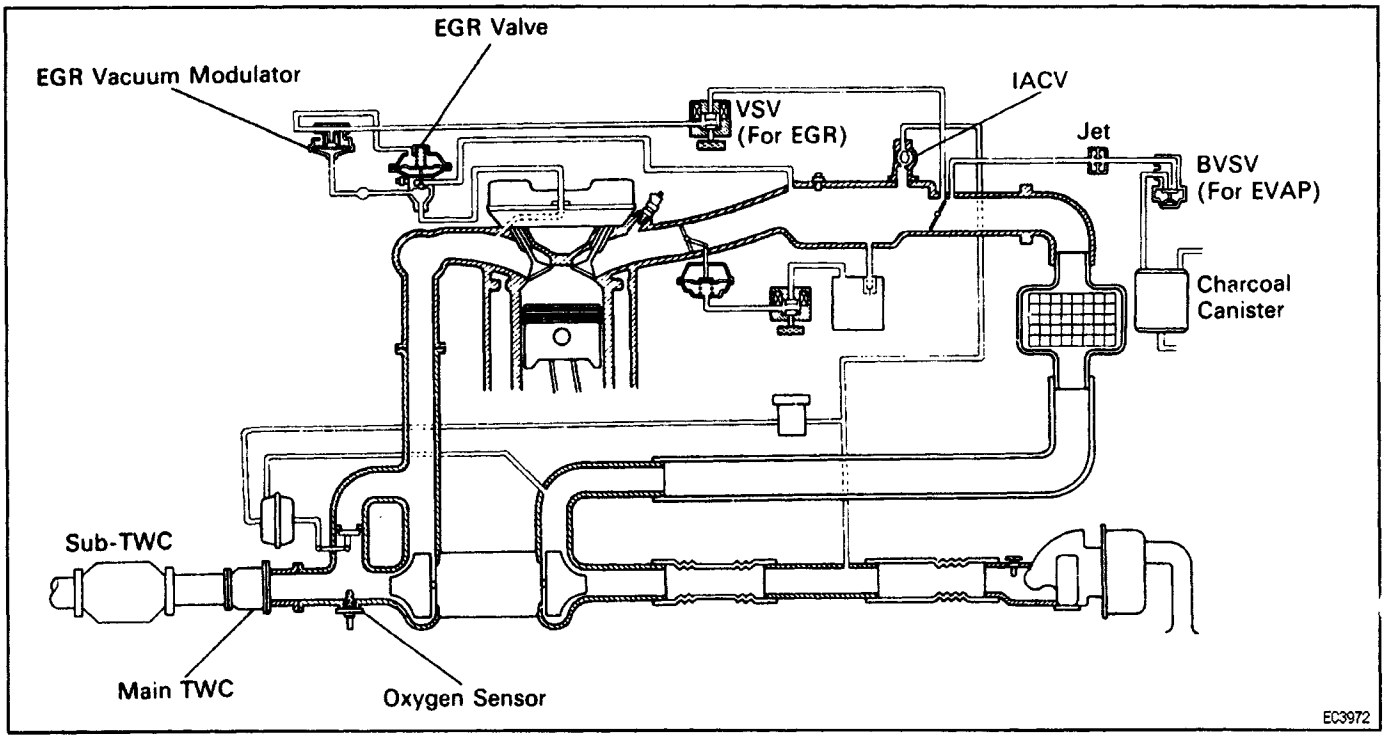

POSITIVE CRANKCASE VENTILATION (PCV) SYSTEM

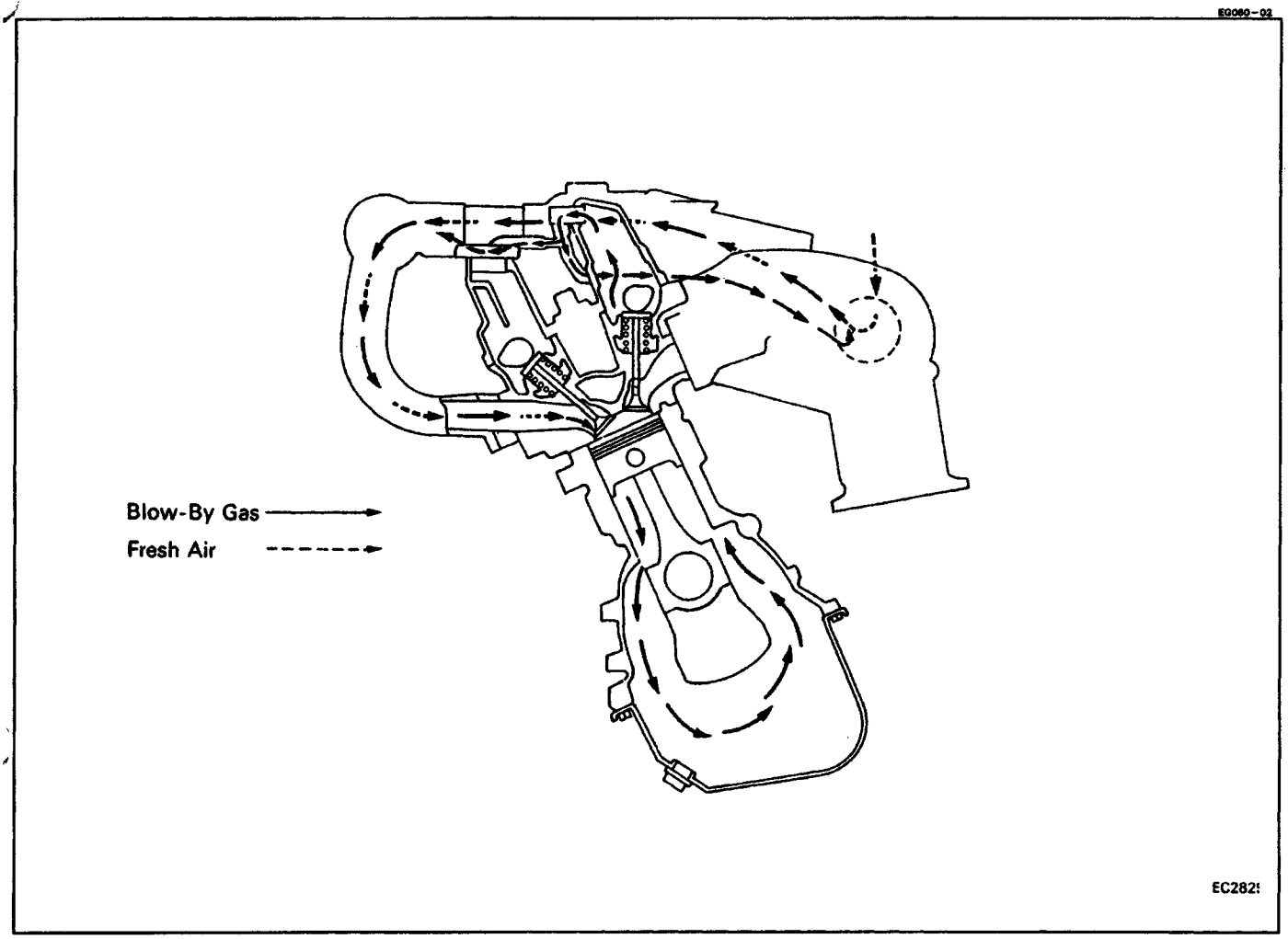

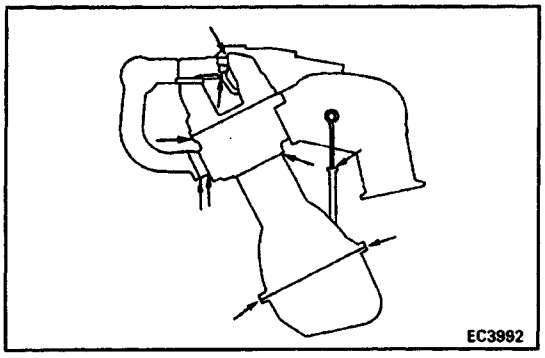

EG062–02

PCV HOSES AND CONNECTIONS INSPECTION

VISUALLY INSPECT HOSES, CONNECTIONS AND GASKETS

Check for cracks, leaks or damage.

EMISSION CONTROL SYSTEMS

SYSTEM PURPOSE

EG05T–02

System	Abbreviation	Purpose
Positive crankcase ventilation	PCV	Reduces blow–by gas (HC)
Fuel evaporative emission control	EVAP	Reduces evaporative HC
Exhaust gas recirculation	EG R	Reduces NOx
Three–way catalyst	TWC	Reduces HC, CO and NOx
Electronic fuel injection”	SMPI	Regulates all engine conditions for reduction of exhaust emissions.

* For inspection and repair of the SMPI system, refer to SMPI Section.

V00997

PREPARATION

RECOMMENDED TOOLS

EG05V–01

	09082–00015 TOYOTA Electrical Tester	

EQUIPMENT

EG05W–02

Heater	TVS
Thermometer	TVS
Tachometer	
Torque wrench	
Vacuum gauge	

SSM (SPECIAL SERVICE MATERIALS)

EG05X–01

08833–00070 Adhesive 1324, THREE BOND 1324 or equivalent	TVS

SERVICE SPECIFICATIONS

SERVICE DATA

EG08P–01

vsv (for EGR)	**Resistance (at 20° C (68° F))**	**33 –39Ω**

TORQUE SPECIFICATIONS

EG05Q–01

Part tightened	N–m	kgf–cm	ft–lbf
TVS x Water outlet housing	**29**	300	**22**
EGR valve x Intake manifold	**19**	195	**19**
EGR valve x EGR pipe	**59**	600	**43**
Main TWC x Turbine outlet elbow	**29**	300	**22**
TWC stay x Main TWC	**59**	600	**43**
TWC stay x Cylinder block	**59**	600	**43**
Clutch release cylinder x Transaxle	**12**	120	**9**
Front engine mounting bracket x Transaxle	**77**	790	**57**
Front engine mounting insulator x Body	**77**	790	**57**
Front engine mounting insulator x Bracket	**96**	980	**71**
Front exhaust pipe x Main TWC	**62**	630	**46**
Front exhaust pipe support bracket x Suspension crossmember	**21**	210	**15**
Suspension member damper x Suspension crossmember	**21**	210	**15**
Tailpipe x Body bracket	**66**	670	**48**
Tailpipe x Front exhaust pipe	**43**	**440**	**32**
Tailpipe bracket x Front exhaust pipe bracket	**19**	190	**14**
A/C idler pulley bracket x Cylinder block (12 mm head)	**25**	250	**18**
A/C idler pulley bracket x Cylinder block (14 mm head)	**27**	275	**20**
A/C idler pulley bracket x RH engine hanger	**37**	375	**27**
A/C compressor x Cylinder block	**25**	250	**18**
Lower suspension brace x Body	**73**	740	**54**

EMISSION CONTROL SYSTEMS

SYSTEM PURPOSE

EG05T–02

System	Abbreviation	Purpose
Positive crankcase ventilation	PCV	Reduces blow–by gas (HC)
Fuel evaporative emission control	EVAP	Reduces evaporative HC
Exhaust gas recirculation	EG R	Reduces NOx
Three–way catalyst	TWC	Reduces HC, CO and NOx
Electronic fuel injection”	SMPI	Regulates all engine conditions for reduction of exhaust emissions.

* For inspection and repair of the SMPI system, refer to SMPI Section.

V00997

PREPARATION

RECOMMENDED TOOLS

EG05V–01

	09082–00015 TOYOTA Electrical Tester	

EQUIPMENT

EG05W–02

Heater	TVS
Thermometer	TVS
Tachometer	
Torque wrench	
Vacuum gauge	

SSM (SPECIAL SERVICE MATERIALS)

EG05X–01

08833–00070 Adhesive 1324, THREE BOND 1324 or equivalent	TVS

THREE–WAY CATALYST (TWC) SYSTEM

EG06J–02

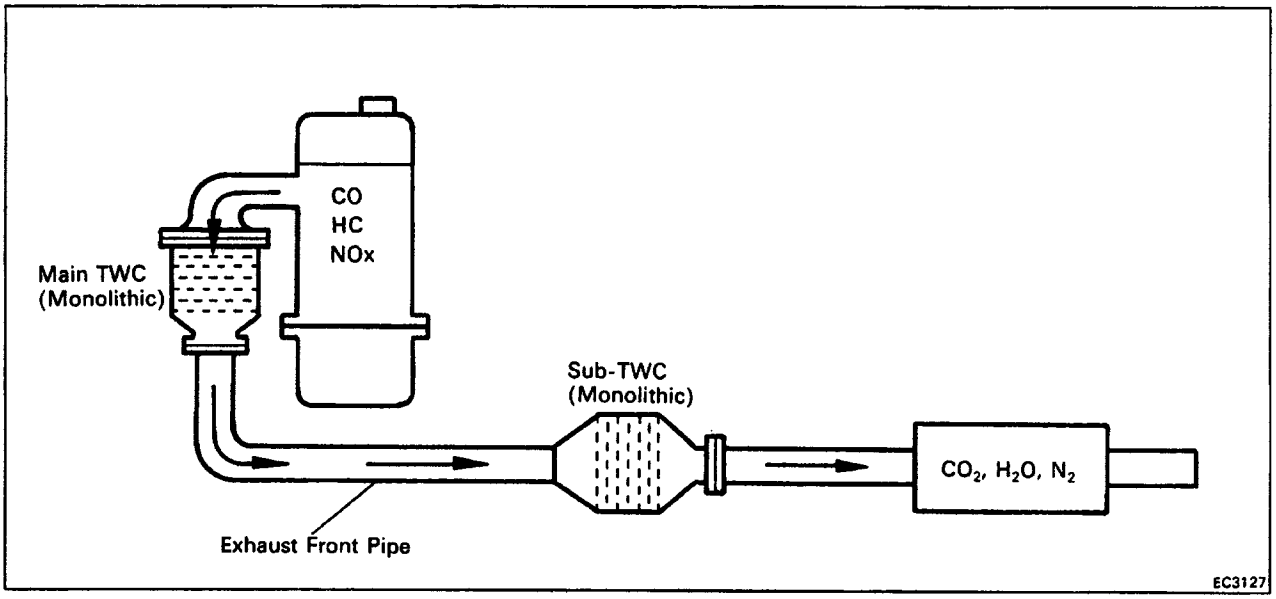

To reduce C0, HC and NOx emissions, they are oxidized, reduced and converted to carbon dioxide ($C0_2$), water (H_20) and nitrogen (N_2) by the catalyst.

Exhaust Port		Main TWC		Sub–TWC		Exhaust Gas
CO HC NOx	→	OXIDATION AND REDUCTION	→	OXIDATION AND REDUCTION	→	CO_2 H_20 N_2

V00328

EXHAUST PIPE ASSEMBLY INSPECTION

1. INSPECT CONNECTIONS FOR LOOSENESS OR DAMAGE

2. INSPECT CLAMPS FOR WEAKNESS, CRACKS OR DAMAGE

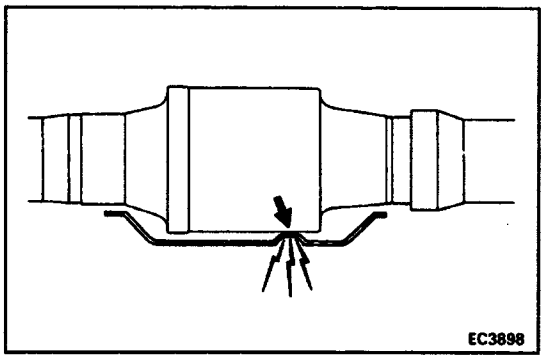

EG06L–02

SUB–TWC INSPECTION

INSPECT FOR DENTS OR DAMAGE

If any part of protector is damaged or dented to the extent that it contacts the sub–TWC, repair or re–place it.

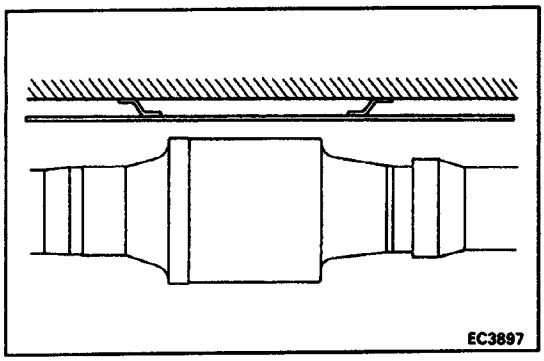

EG08M–02

SUB–TWC HEAT INSULATOR INSPECTION

1. INSPECT HEAT INSULATOR FOR DAMAGE
2. INSPECT FOR ADEQUATE CLEARANCE BETWEEN CATALYTIC CONVERTER AND HEAT INSULATOR

EG0XG–01

COMPONENTS FOR REMOVAL AND INSTALLATION

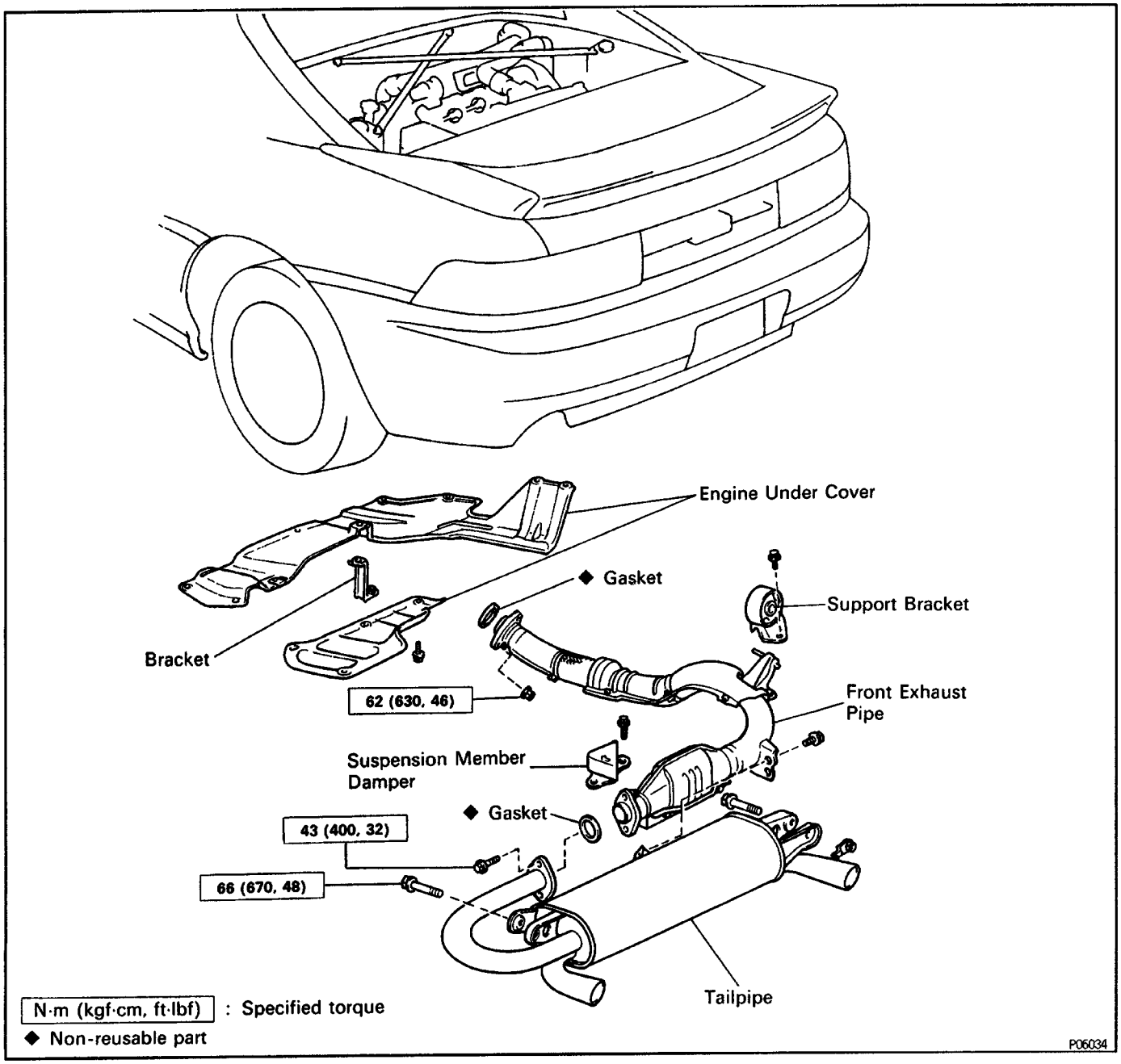

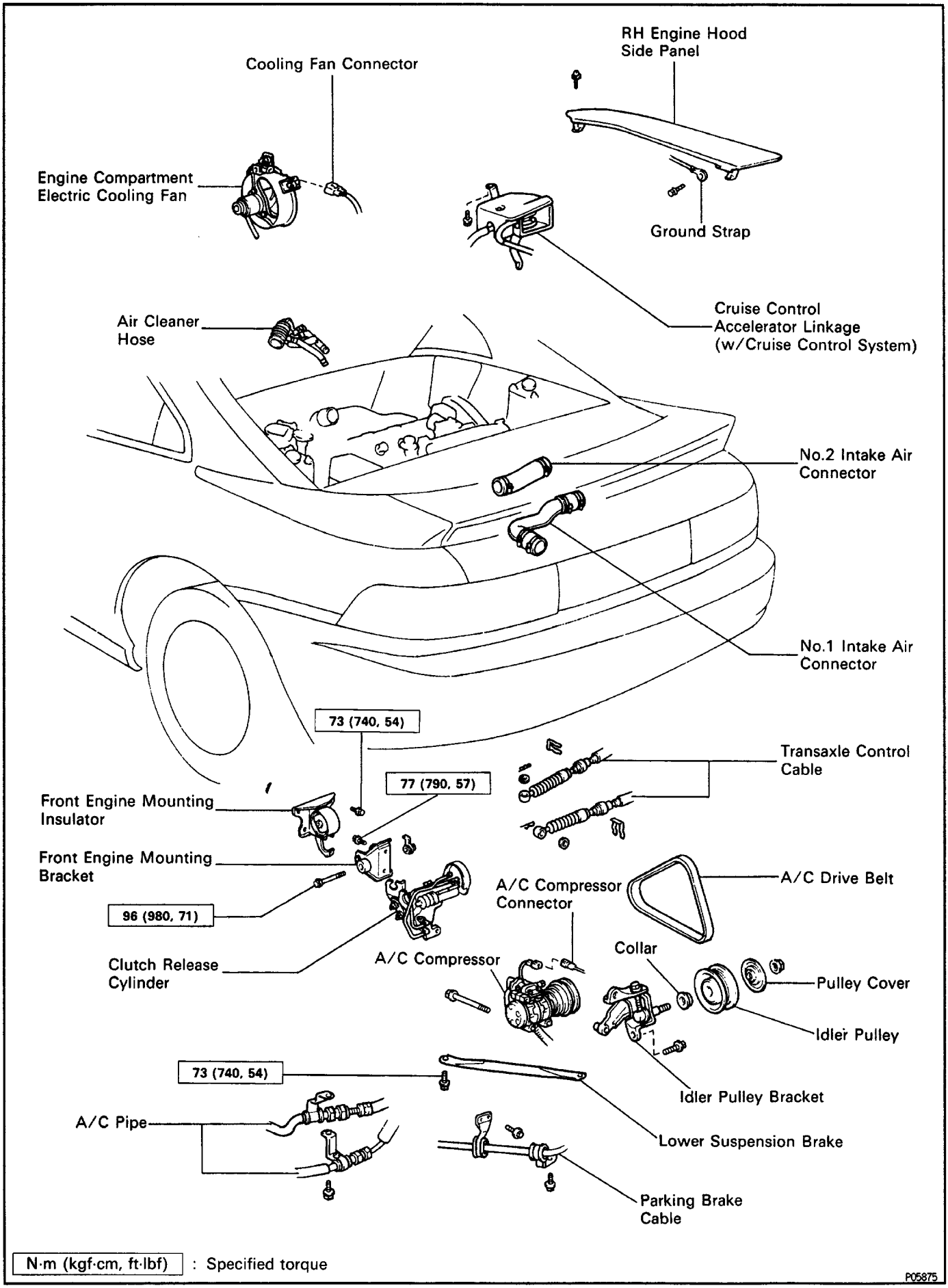
RH Engine Hood Side Panel
Cooling Fan Connector
Engine Compartment Electric Cooling Fan
Ground Strap
Cruise Control Accelerator Linkage (w/Cruise Control System)
Air Cleaner Hose
No.2 Intake Air Connector
No.1 Intake Air Connector
73 (740, 54)
77 (790, 57)
Transaxle Control Cable
Front Engine Mounting Insulator
Front Engine Mounting Bracket
96 (980, 71)
A/C Compressor Connector
A/C Drive Belt
Clutch Release Cylinder
A/C Compressor
Collar
Pulley Cover
Idler Pulley
73 (740, 54)
Idler Pulley Bracket
A/C Pipe
Lower Suspension Brake
Parking Brake Cable
N·m (kgf·cm, ft·lbf) : Specified torque
P05875

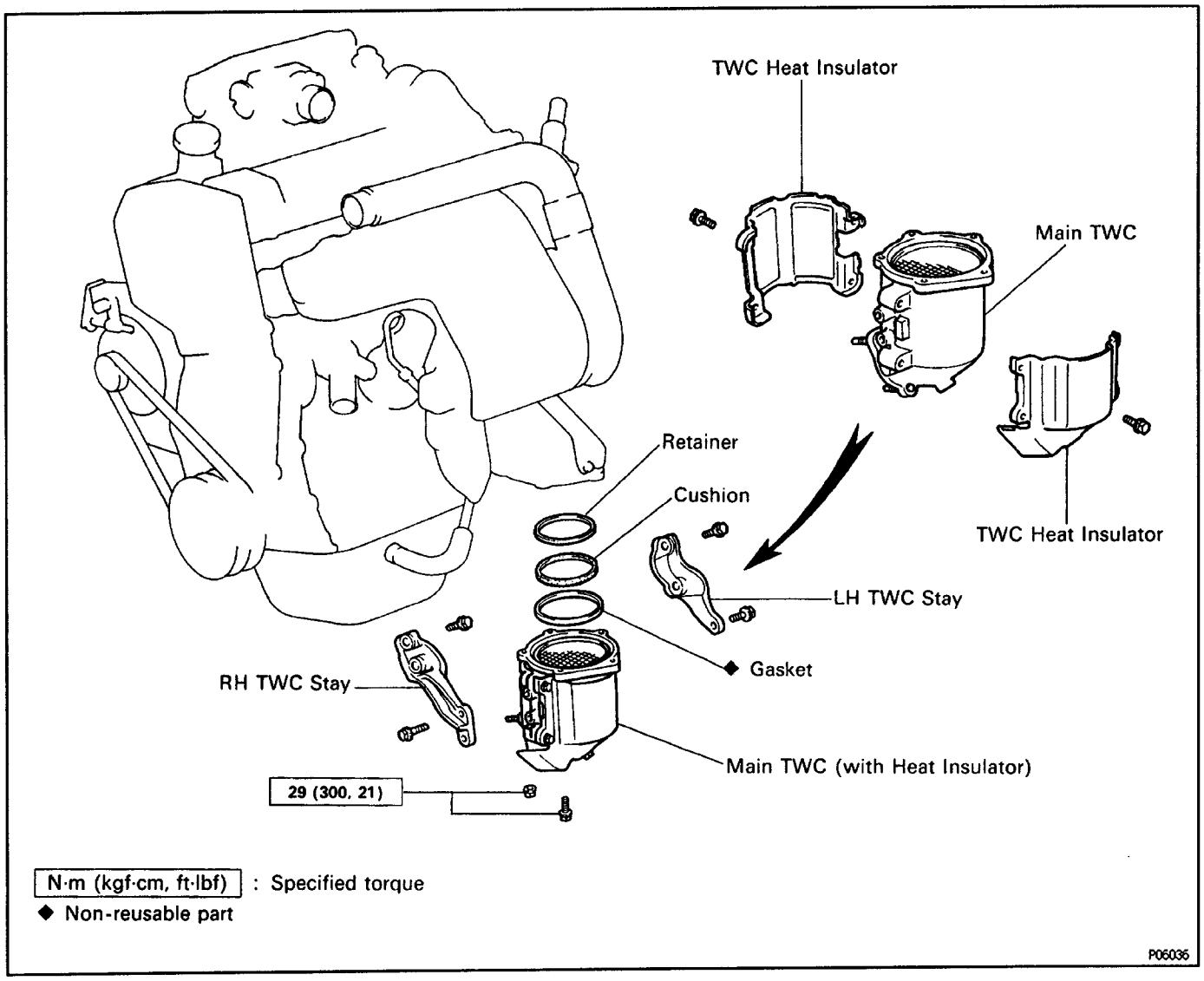

EGGXH–01

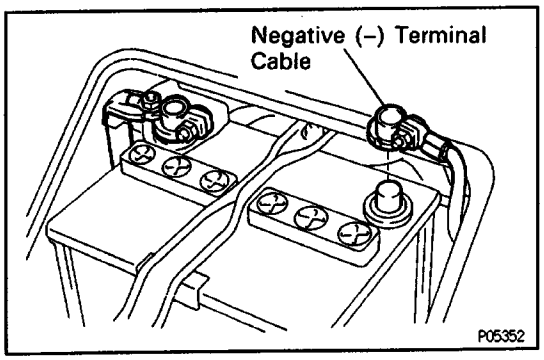

MAIN TWC REPLACEMENT

(See Components for Removal and Installation)

CAUTION: Check that the TWC is cool.

1. DISCONNECT CABLE FROM NEGATIVE TERMINAL OF BATTERY

CAUTION: Turn the ignition switch to "LOCK". Disconnect the negative terminal from the battery. Wait at least 20 seconds before proceeding with work.

2. REMOVE ENGINE UNDER COVERS

3. REMOVE RH ENGINE HOOD SIDE PANEL

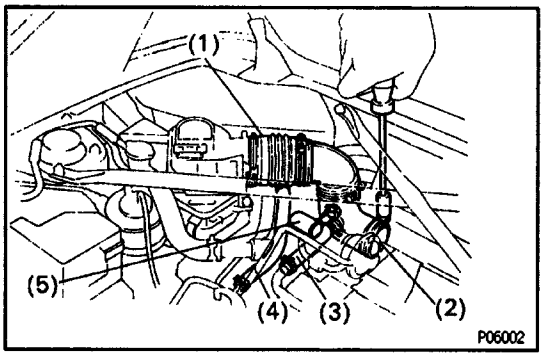

4. REMOVE AIR CLEANER HOSE

Disconnect the following hoses, and remove the air cleaner hose:

(1) Air cleaner hose from air flow sensor
(2) Air cleaner hose from turbocharger
(3) PCV hose from cylinder head cover
(4) Air hose from No.2 air hose
(5) Air hose from air by–pass valve

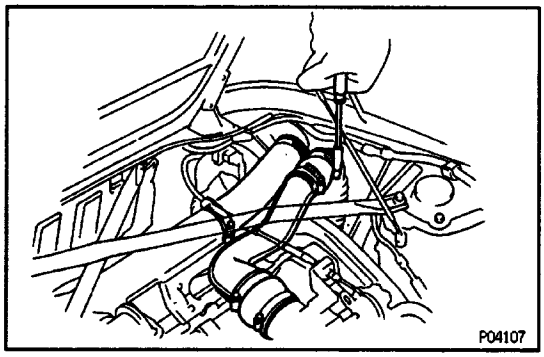

5. REMOVE NO.1 AND NO.2 INTAKE AIR CONNECTORS

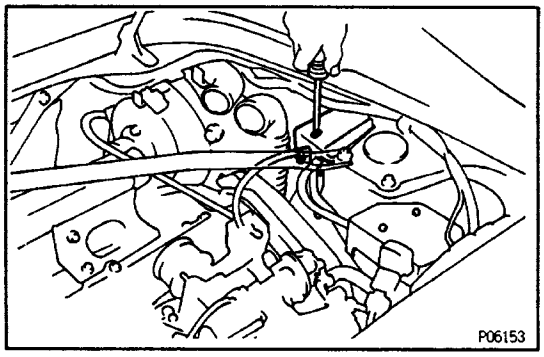

6. (w/ CRUISE CONTROL SYSTEM) REMOVE CRUISE CONTROL ACCELERATOR LINKAGE

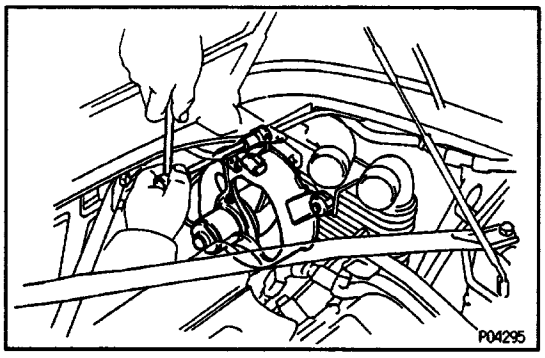

7. REMOVE ENGINE COMPARTMENT ELECTRIC COOLING FAN

(a) Disconnect the cooling fan connector.
(b) Loosen the three bolts, and remove the cooling fan.

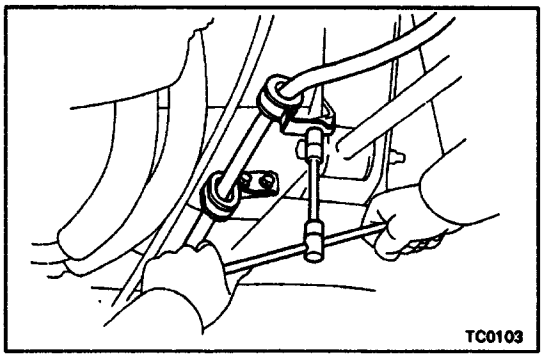

8. DISCONNECT A/C COMPRESSOR FROM ENGINE

(a) Remove the three clamp bolts, and disconnect the parking brake cable.

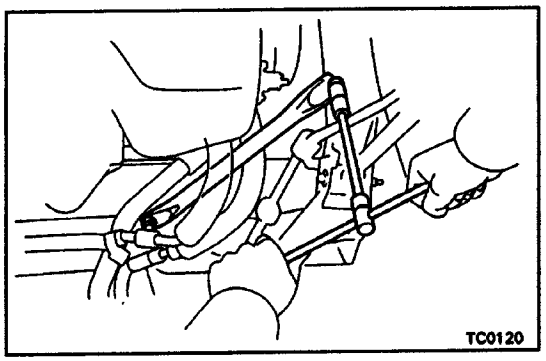

(b) Remove the two bolts and suspension brace.

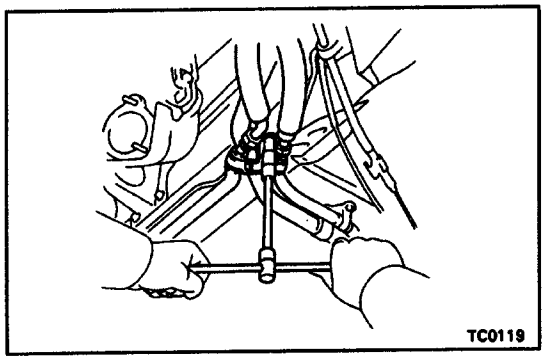

(c) Remove the clamp nut, and disconnect the two A/C pipes.

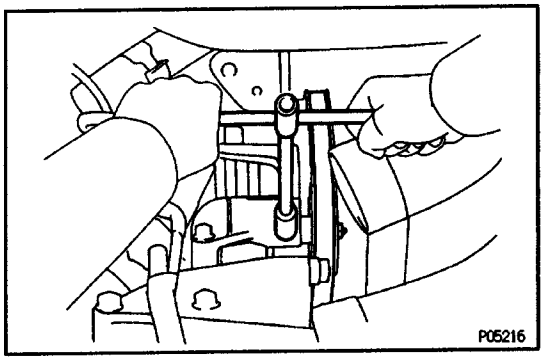

(d) Loosen the idler pulley nut.
(e) Loosen the adjusting bolt, and remove the drive belt.

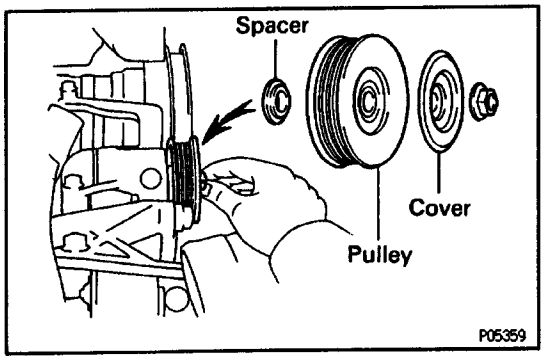

(f) Remove the nut, pulley cover, idler pulley and spacer.

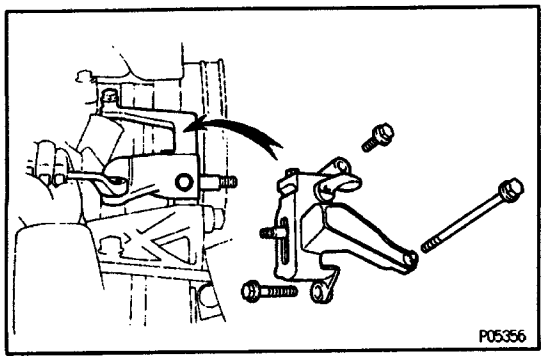

(g) Disconnect the A/C compressor connector.
(h) Remove the three bolts and idler pulley bracket.

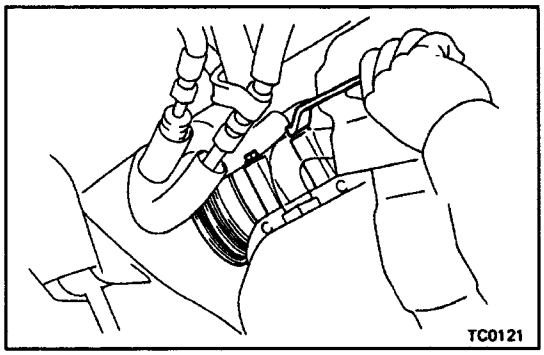

(i) Remove the two bolts, and disconnect the A/C compressor from the engine.

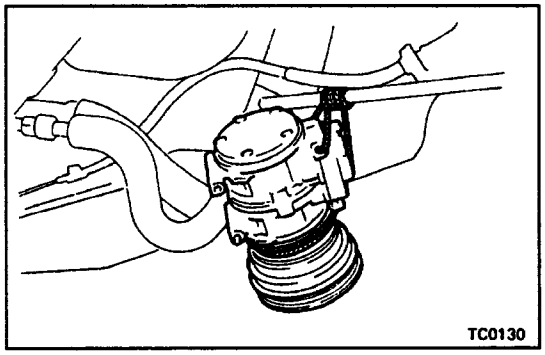

HINT: Suspend the A/C compressor to strut rod with a string.

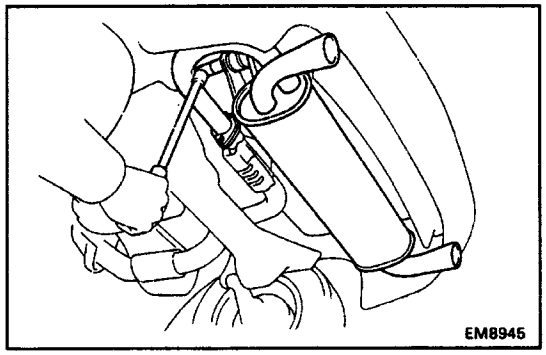

9. REMOVE TAILPIPE

(a) Remove the two bolts holding the front exhaust pipe to the tailpipe bracket.
(b) Remove the two bolts holding the front exhaust pipe to the tailpipe.
(c) Remove the two bolts, tailpipe and gasket.

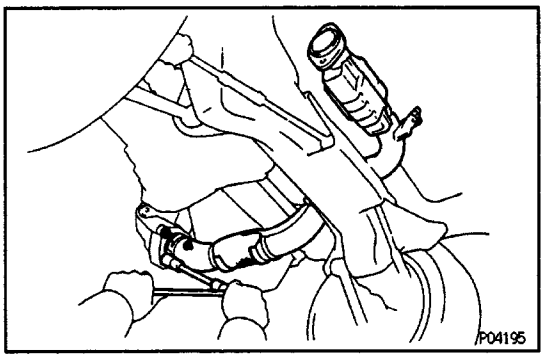

10. REMOVE FRONT EXHAUST PIPE
(See step 2 in Main TWC Replacement)

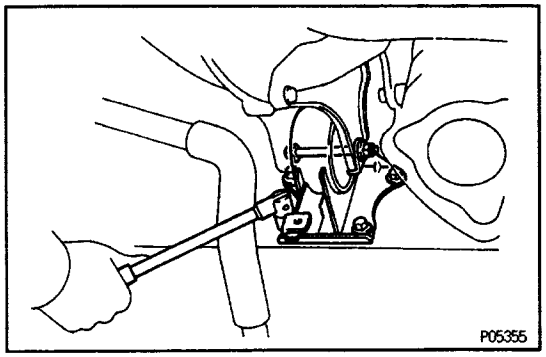

11. REMOVE FRONT ENGINE MOUNTING INSULATOR

(a) Remove the through bolt and nut holding the mounting insulator to the mounting bracket.
(b) Remove the four bolts and mounting insulator.

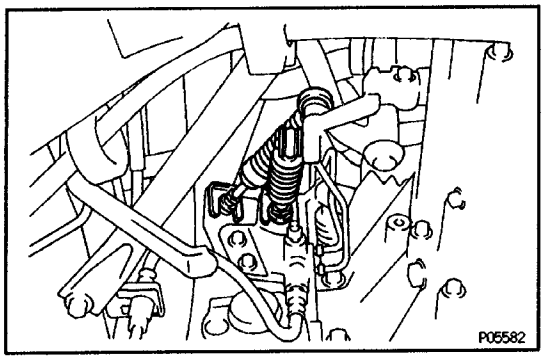

12. REMOVE FRONT ENGINE MOUNTING BRACKET AND CLUTCH RELEASE CYLINDER

(a) Disconnect the two transaxle control cables from the transaxle.

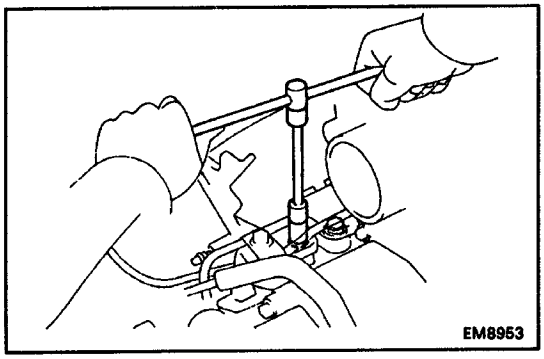

(b) Remove the two bolts holding the clutch release cyl–inder to the transaxle.

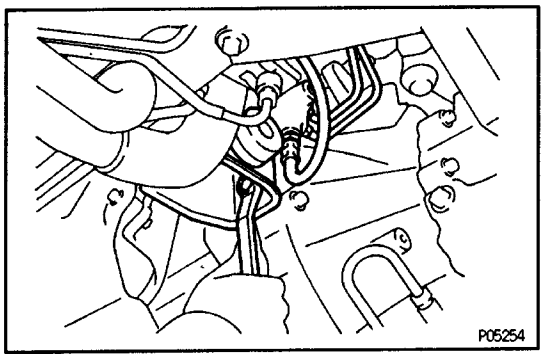

(c) Remove the two bolts and mounting bracket.

(d) Disconnect the clutch release cylinder from the tra–nsaxle.

Remove the three bolts and stiffener plate.

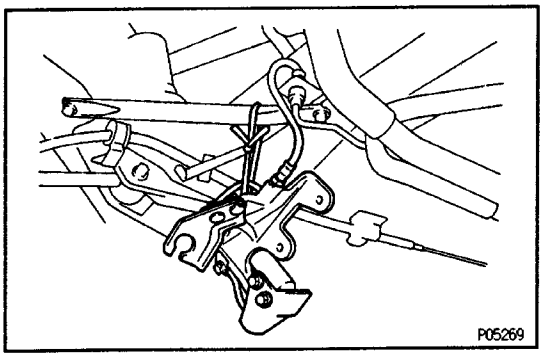

HINT: Suspend the clutch release cylinder to the suspension brace with a string.

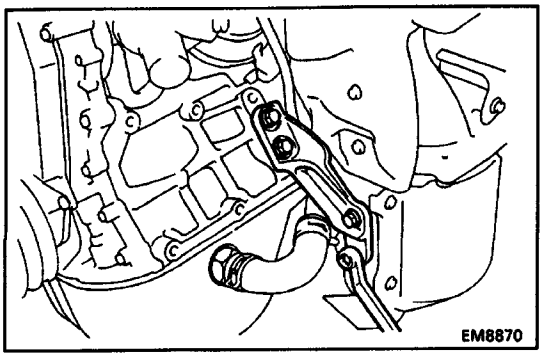

13. REMOVE MAIN TWC

(a) Remove the four bolts and RH TWC stay.

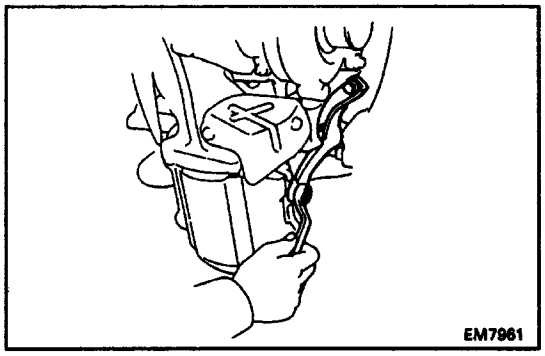

(b) Remove the three bolts and LH TWC stay.

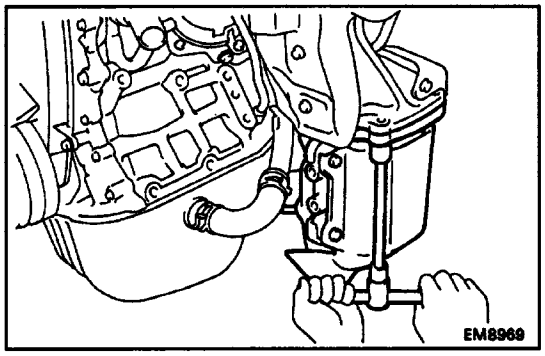

(c) Remove the three bolts, two nuts, TWC, gasket, retainer and cushion.

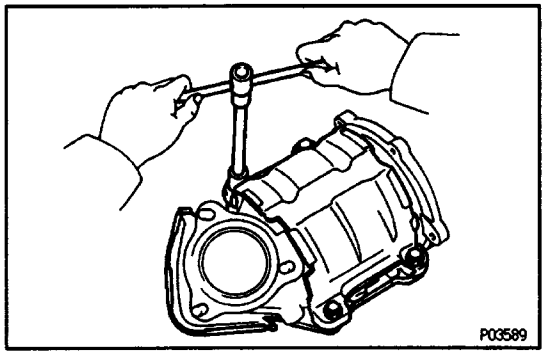

(d) Remove the nine bolts and two heat insulators from the TWC.

14. REINSTALL MAIN TWC

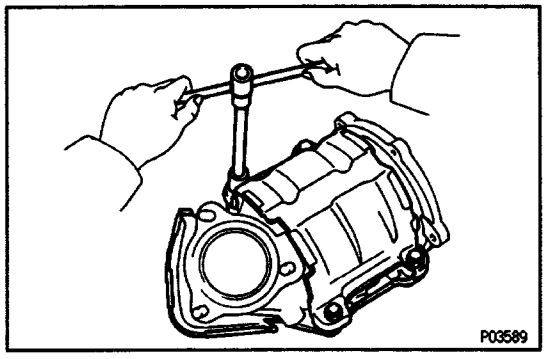

(a) Remove the two heat insulators to a new TWC with the nine bolts.

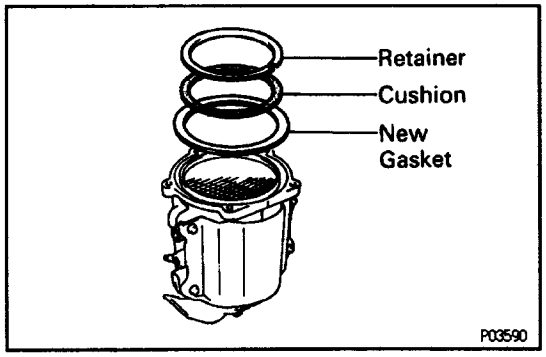

(b) Place the cushion, retainer and a new gasket on the TWC.

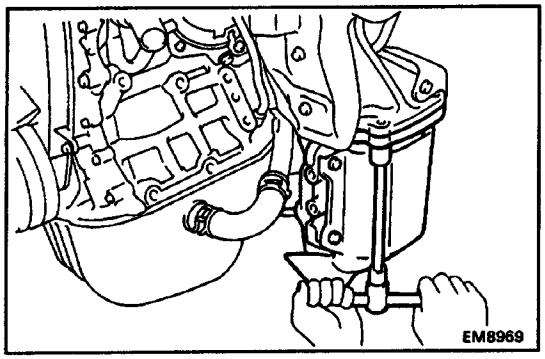

(c) Install the TWC with the three bolts and two nuts.
Torque: 29 N–m (300 kgf–cm, 21 ft–lbf)

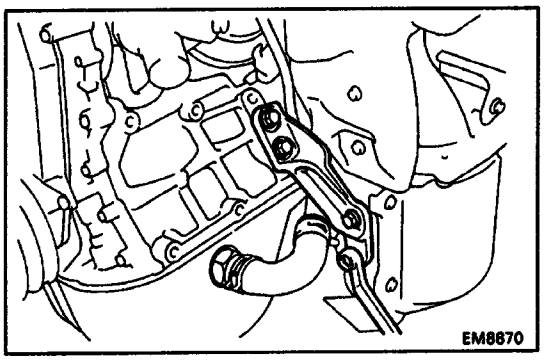

(d) Install the RH TWC stay with the four bolts.
Torque: 59 N–m (600 kgf–cm, 43 ft–lbf)

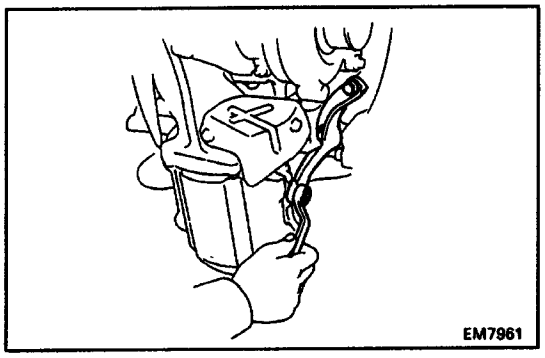

(e) Install the LH TWC stay with the three bolts.
Torque: 59 N–m (600 kgf–cm, 43 ft–lbf)

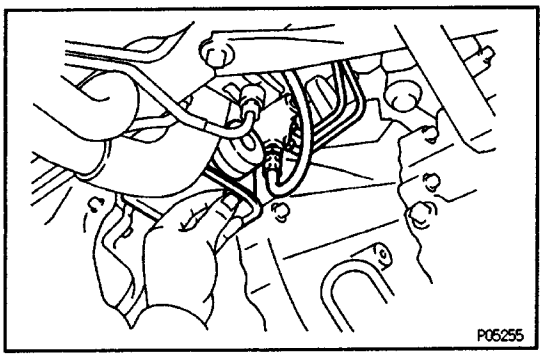

15. REINSTALL CLUTCH RELEASE CYLINDER AND FRONT ENGINE MOUNTING BRACKET

(a) Temporarily install the release cylinder and mounting bracket with the two bolts.

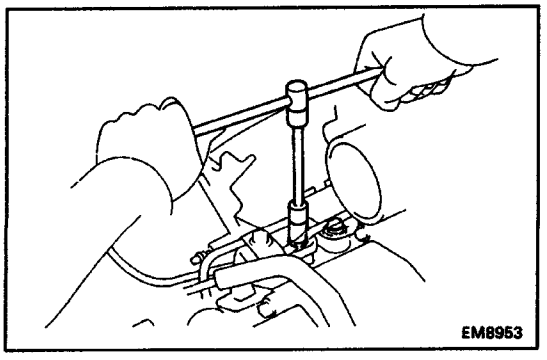

(b) Install the clutch release cylinder with the two bolts.
Torque: 12 N–m (120 kgf–cm. 9 ft–lbf)

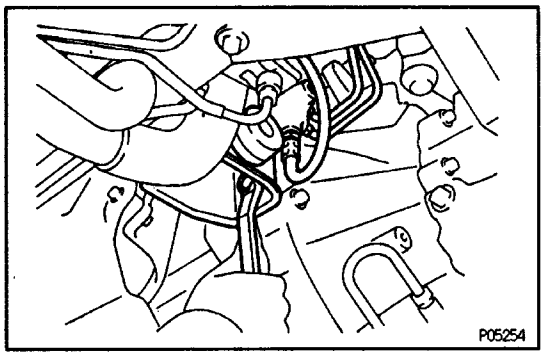

(c) Tighten the two bolts holding the clutch release cyl–inder to the transaxle.
Torque: 77 N–m (790 kgf–cm, 57 ft–lbf)

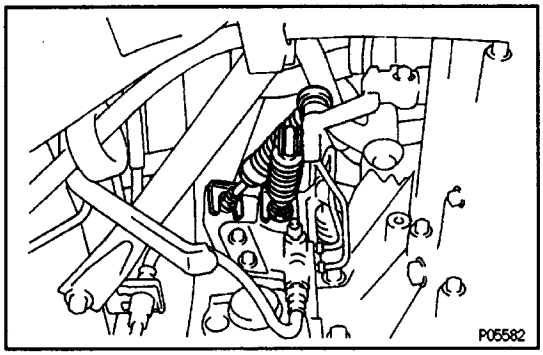

(d) Connect the two transaxle control cables to the tra–nsaxle.

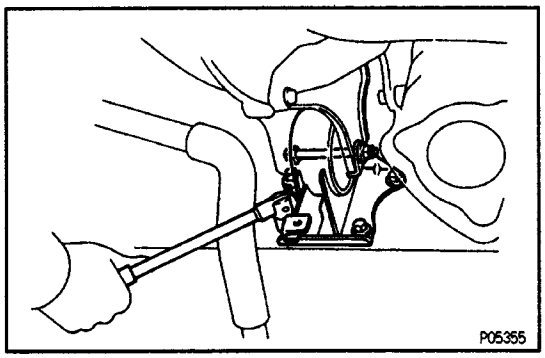

16. REINSTALL FRONT ENGINE MOUNTING INSULATOR

(a) Install the mounting insulator to the body with the four bolts.
Torque: 77 N–m (790 kgf–cm, 57 ft–lbf)

(b) Install the mounting insulator to the mounting bracket with the through bolt and nut.
Torque: 96 N–m (980 kgf–cm, 71 ft–lbf)

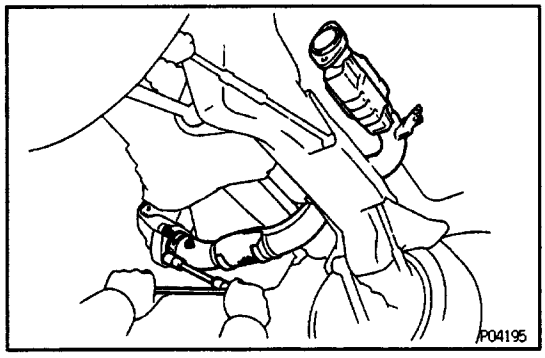

17. REINSTALL FRONT EXHAUST PIPE
(See step 3 in Main TWC Replacement)

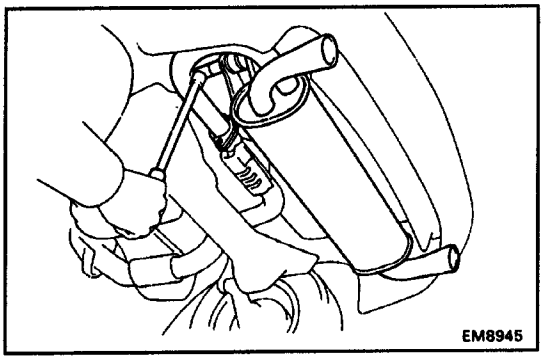

18. REINSTALL TAILPIPE

(a) Place a new gasket to the rear of the front exhaust pipe.

(b) Install the tailpipe to the body bracket with the two bolts and nut.

Torque:66 N–m (670 kgf–cm, 48 ft–lbf)

(c) Install the two bolts holding the front exhaust pipe to the tailpipe.

Torque: 43 N–m (440 kgf–cm, 32 ft–lbf)

(d) Install the two bolts holding the front exhaust pipe to the tailpipe bracket.

Torque: 19 N–m (190 kgf–cm, 14 ft–lbf)

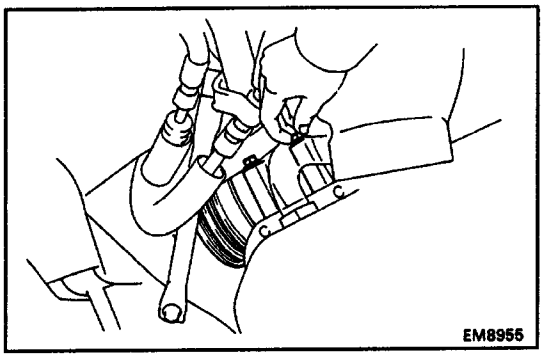

19. REINSTALL A/C COMPRESSOR

(a) Temporarily install the A/C compressor with the two bolts.

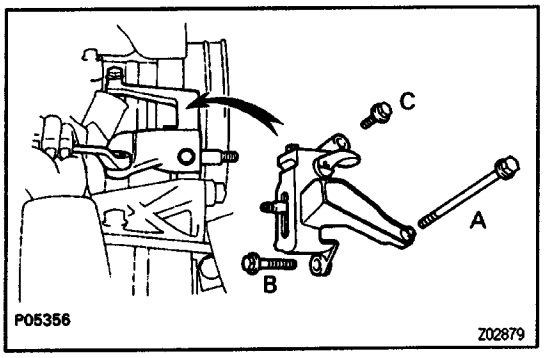

(b) Install the idler pulley bracket with the three bolts.

Torque:

25 N–m (250 kgf–cm, 18 ft–lbf) for A
27 N–m (275 kgf–cm, 20 ft–lbf) for B
37 N–m (375 kgf–cm, 27 ft–lbf) for C

(c) Connect the A/C compressor connector.

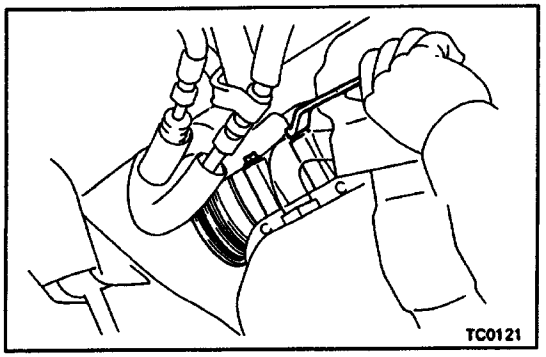

(d) Tighten the two bolts of the lower side of the A/C compressor.

Torque: 25 N–m (250 kgf–cm, 18 ft–lbf)

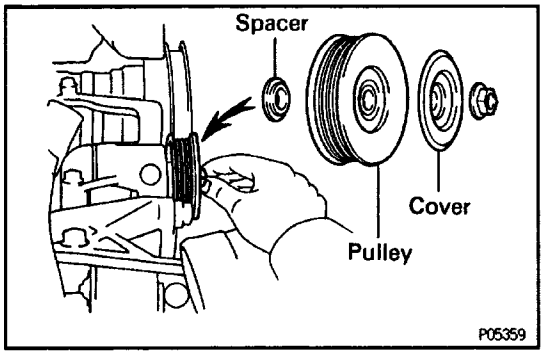

(e) Temporarily install the spacer, pulley and pulley cover with the nut.

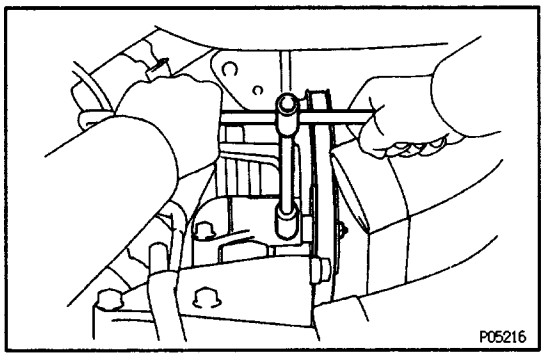

(f) Install the drive belt with the adjusting bolt.
(g) Tighten the idler pulley nut.

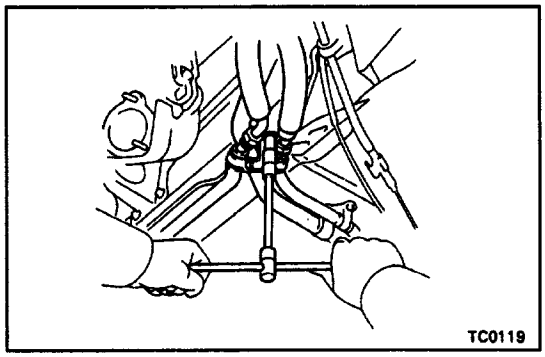

(h) Install the two A/C pipes with the nut.

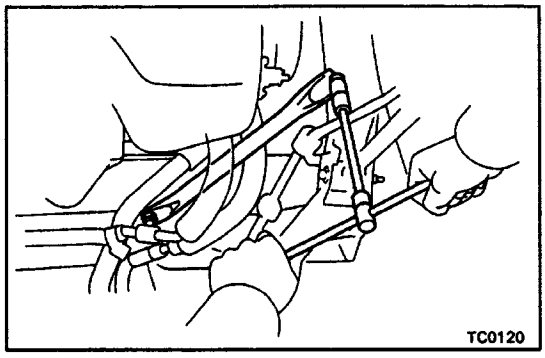

(i) Install the suspension brace with the two bolts.
Torque: 73 N–m (740 kgf–cm, 54 ft–lbf)

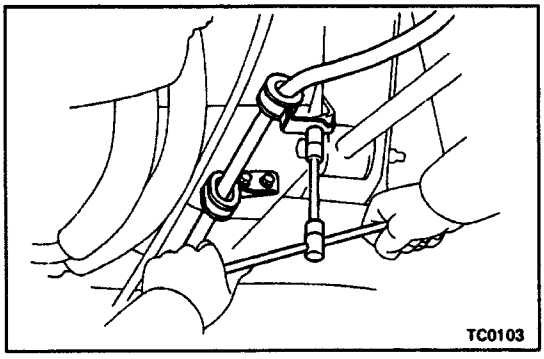

(j) Install the parking brake cable with the two clamp and three bolts.

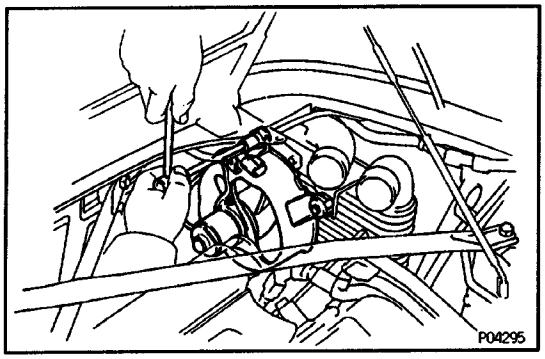

20. REINSTALL ENGINE COMPARTMENT ELECTRIC COOLING FAN

(a) Install the cooling fan with the three bolts.
(b) Connect the cooling fan connector.

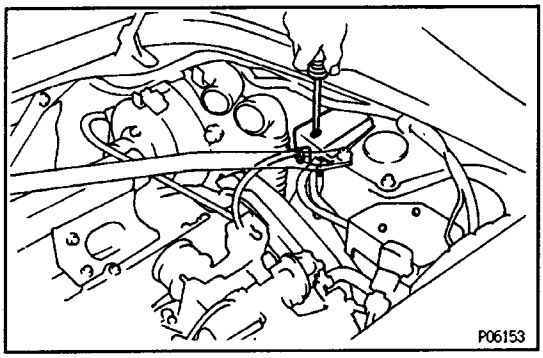

21. (w/ CRUISE CONTROL SYSTEM) REINSTALL CRUISE CONTROL ACCELERATOR LINKAGE

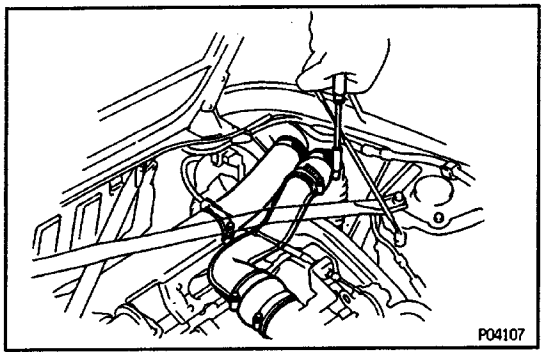

22. REINSTALL NO.1 AND NO.2 INTAKE AIR CONNECTORS

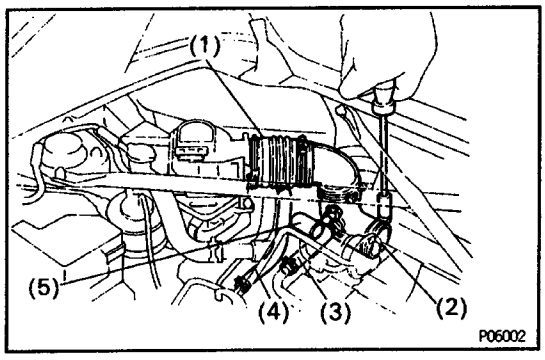

23. REINSTALL AIR CLEANER HOSE

Reconnect the following hoses, and install the air cleaner hose:
(1) Air cleaner hose to air flow sensor
(2) Air cleaner hose to turbocharger
(3) PCV hose to cylinder head cover
(4) Air hose to No.2 air hose
(5) Air hose to air by–pass valve

24. REINSTALL RH ENGINE HOOD SIDE PANEL
25. REINSTALL ENGINE UNDER COVERS
26. RECONNECT CABLE TO NEGATIVE TERMINAL OF BATTERY

COMPONENTS FOR REMOVAL AND INSTALLATION

EG06J–03

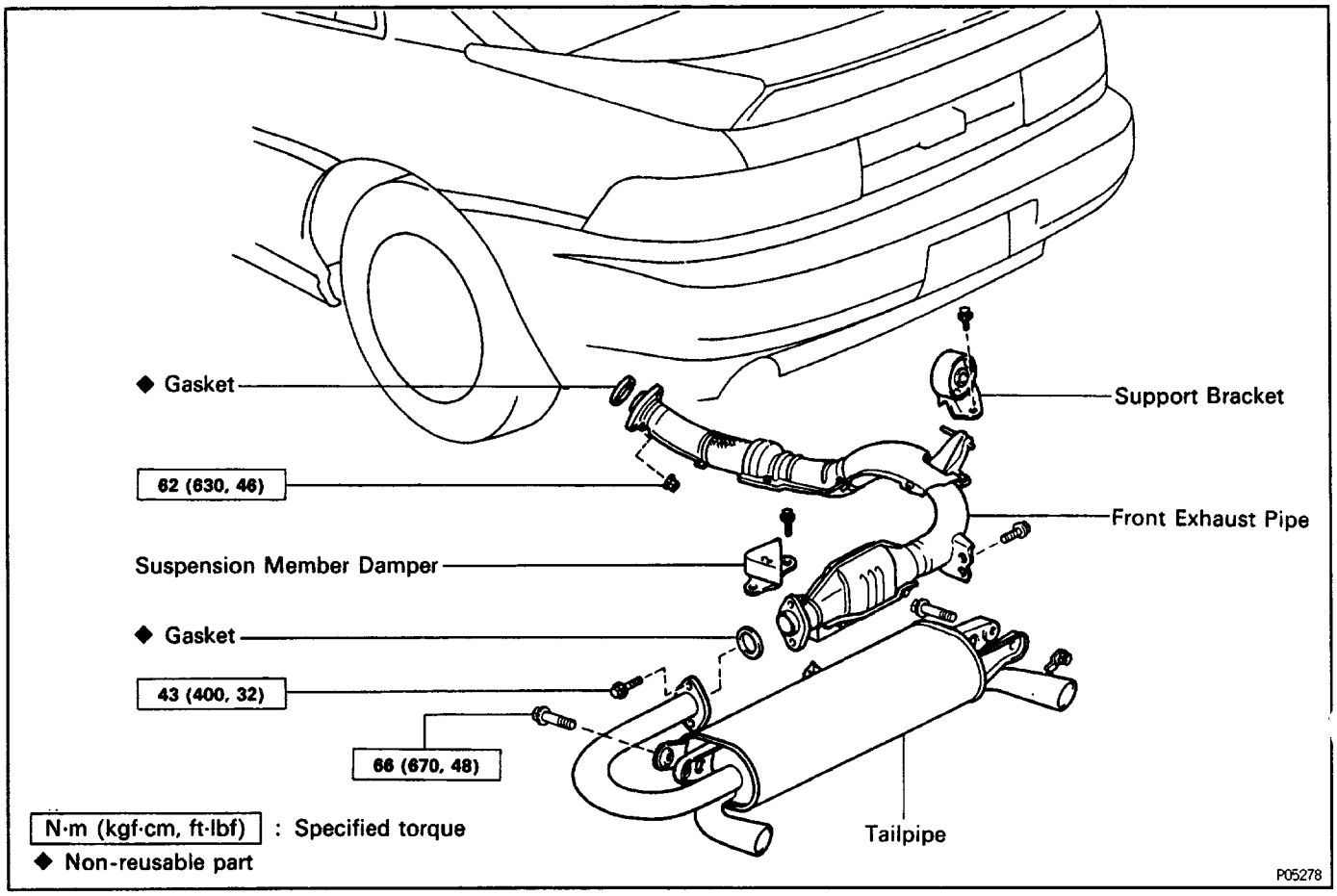

EG0XJ–01

SUB–TWC REPLACEMENT

(See Components for Removal and Installation)

1. REMOVE TAILPIPE

(a) Remove the two bolts holding the front exhaust pipe to the tailpipe bracket.

(b) Remove the two bolts holding the front exhaust pipe to the tailpipe.

(c) Remove the two bolts, tailpipe and gasket.

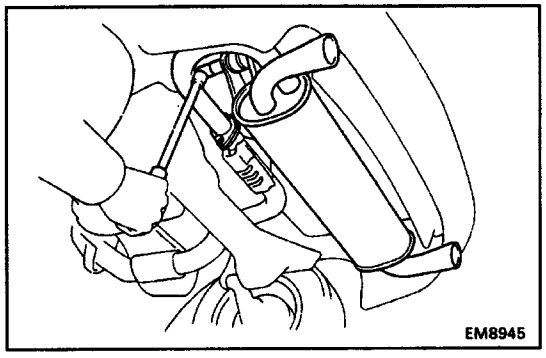

2. REMOVE FRONT EXHAUST PIPE (SUB–TWC)

(a) Remove the two bolts and damper.

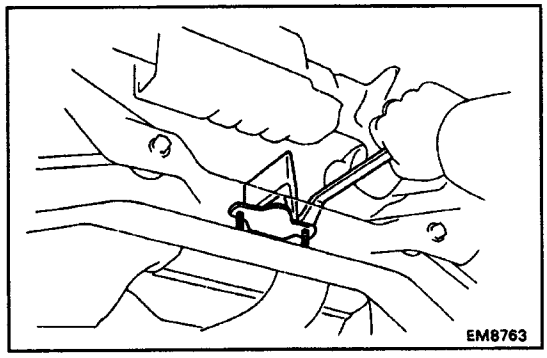

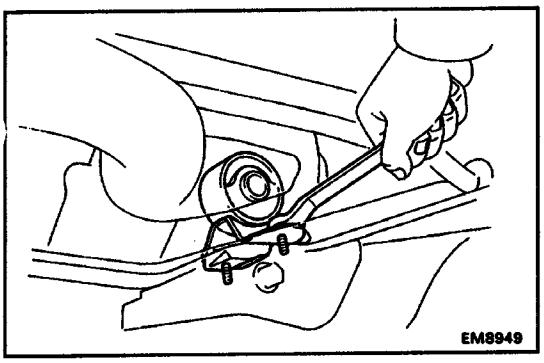

(b) Remove the two bolts and support bracket.

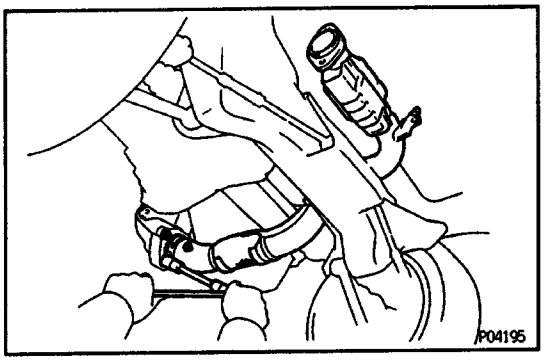

(c) Using a 14 mm deep socket wrench, remove the three nuts.
(d) Remove the front exhaust pipe and two gaskets.

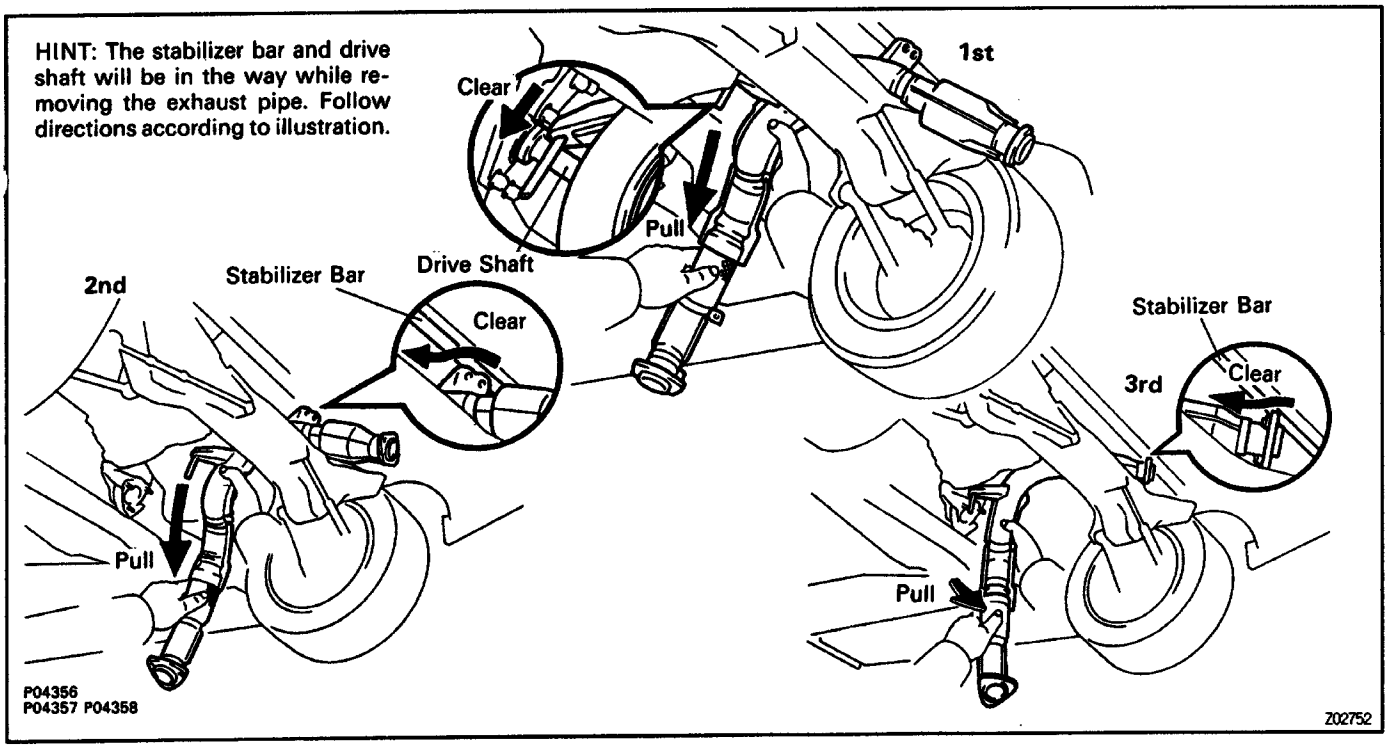

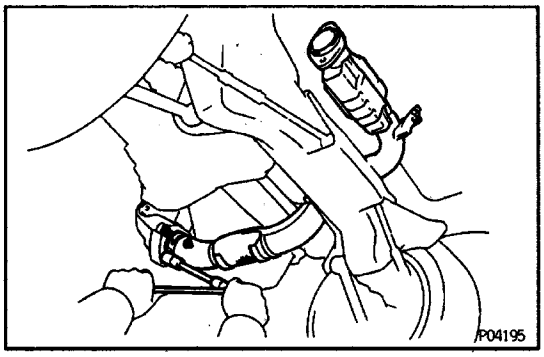

3. REINSTALL FRONT EXHAUST PIPE

(a) Place a new gasket to the front of the front exhaust pipe.

(b) Using a 14 mm deep socket wrench, install the front exhaust pipe with three new nuts.
Torque: 62 N–m (630 kgf–cm, 46 ft–lbf)

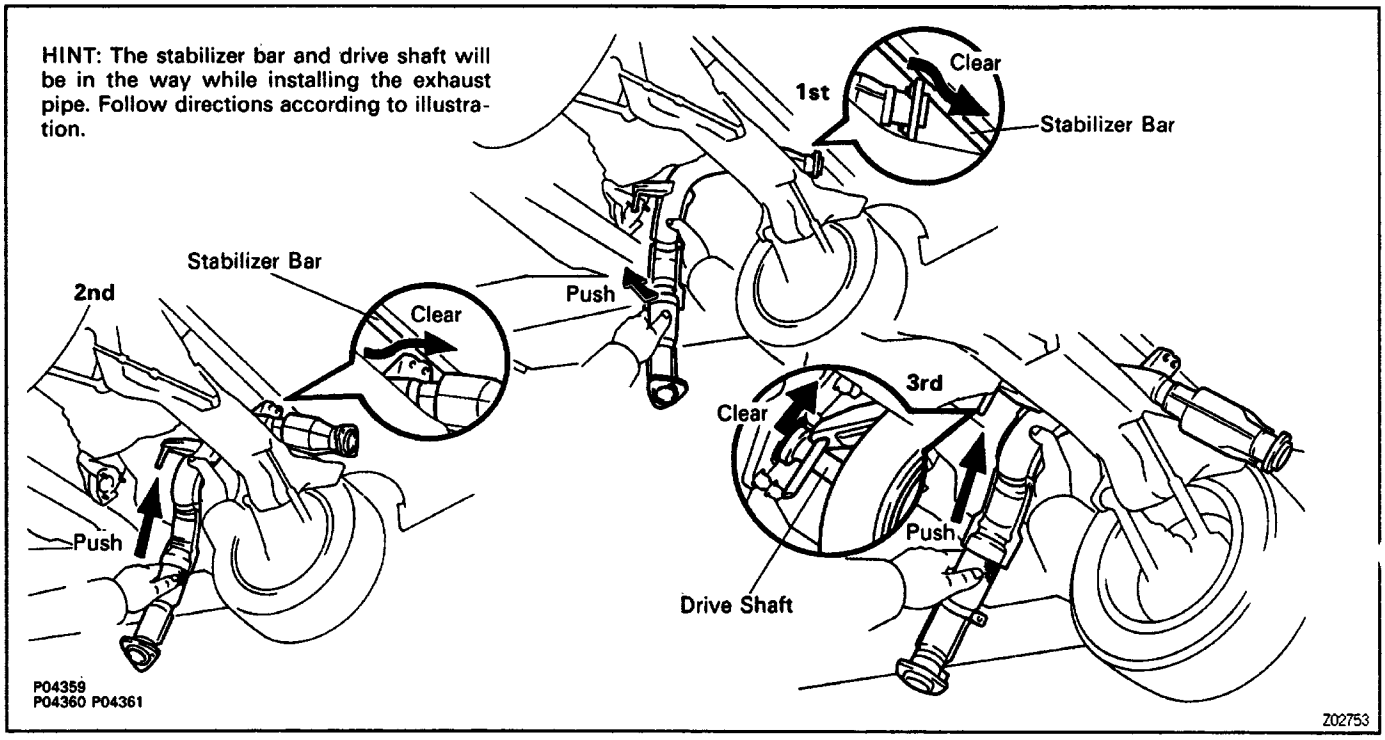

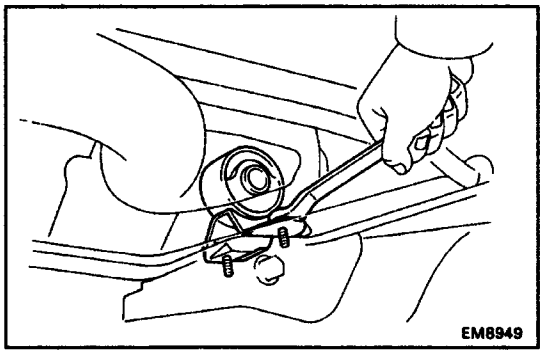

(c) Install the support bracket with the two bolts.
Torque: 21 N–m (210 kgf–cm, 15 ft–lbf)

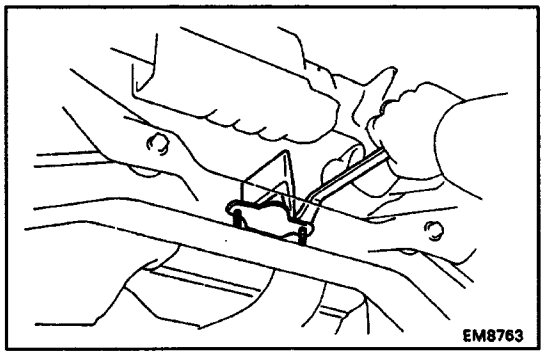

(d) Install the damper with the two bolts.
Torque: 21 N–m (210 kgf–cm, 15 ft–lbf)

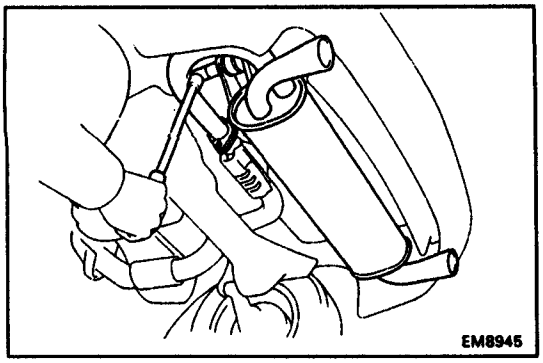

4. REINSTALL TAILPIPE

(a) Place a new gasket to the rear of the front exhaust pipe.

(b) Install the tailpipe to the body bracket with the two bolts and nut.

Torque:66 N–m (670 kgf–cm, 48 ft–lbf)

(c) Install the two bolts holding the front exhaust pipe to the tailpipe.

Torque: 43 N–m (440 kgf–cm, 32 ft–lbf)

(d) Install the two bolts holding the front exhaust pipe bracket to the tailpipe bracket.

Torque: 19 N–m (190 kgf–cm. 14 ft–lbf)

COMPRESSION CHECK

HINT: If there is lack of power, excessive oil con–sumption or poor fuel economy, measure the com–pression pressure.

1. WARM UP AND STOP ENGINE

Allow the engine to warm up to normal operating temperature.

2. DISCONNECT DISTRIBUTOR CONNECTOR

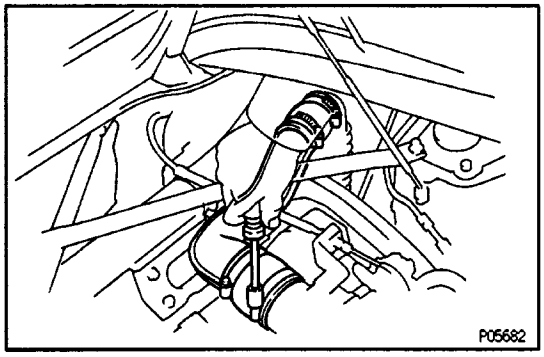

3. REMOVE NO.1 INTAKE AIR CONNECTOR

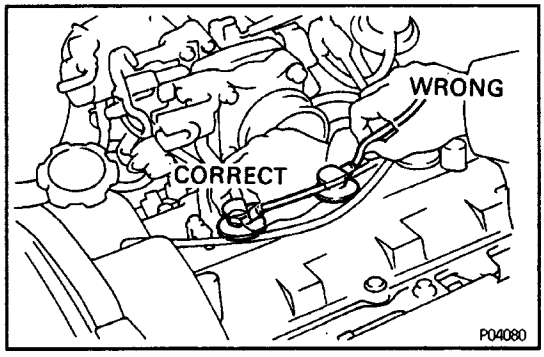

4. DISCONNECT HIGH–TENSION CORDS FROM SPARK PLUGS

Disconnect the high – tension cords at the rubber boot. Do not pull on the cords.

NOTICE: Pulling on or bending the cords may damage the conductor inside.

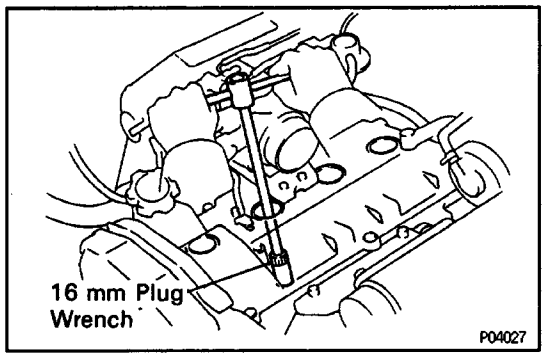

5. REMOVE SPARK PLUGS

Using a 16 mm plug wrench, remove the four spark plugs.

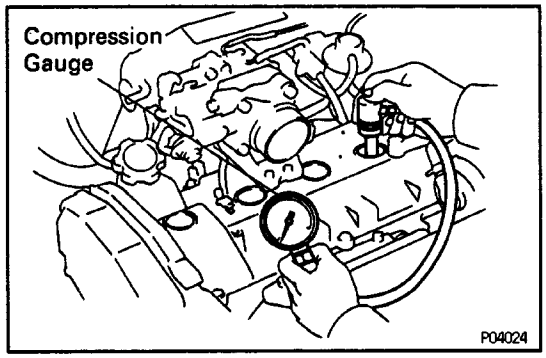

6. CHECK CYLINDER COMPRESSION PRESSURE

(a) Insert a compression gauge into the spark plug hole.

(b) Fully open the throttle.

(c) While cranking the engine, measure the compression pressure.

HINT: Always use a fully charged battery to obtain engine speed of 250 rpm or more.

(d) Repeat steps (a) through (c) for each cylinder.

NOTICE: This measurement must be done in as short a time as possible.

Compression pressure:

1,128 kPa (11.5 kg f/cm^2. 164 psi) or more

Minimum pressure:

883 kPa (9.0 kgf/cm^2, 128 psi)

Difference between each cylinder:

98 kPa (1.0 kg f/cm^2, 14 psi) or less

(e) If the cylinder compression in one or more cylinders is low, pour a small amount of engine oil into the cylin–der through the spark plug hole and repeat steps (a) through (c) for cylinders with low compression.

- If adding oil helps the compression, chances are that the piston rings and/or cylinder bore are worn or damage.
- If pressure stays low, a valve may be sticking or seating is improper, or there may be leakage past the gasket.

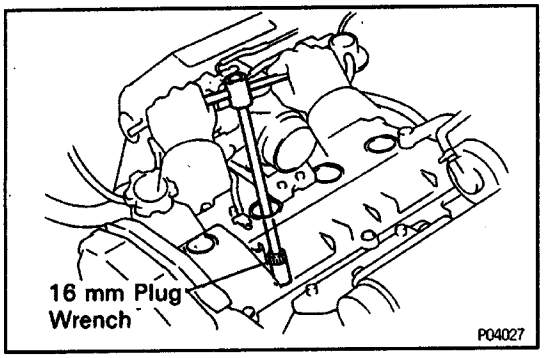

7. REINSTALL SPARK PLUGS

Using a 16 mm plug wrench, install the four spark plugs.

Torque: 18 N–m (180 kgf–cm, 13 ft–lbf)

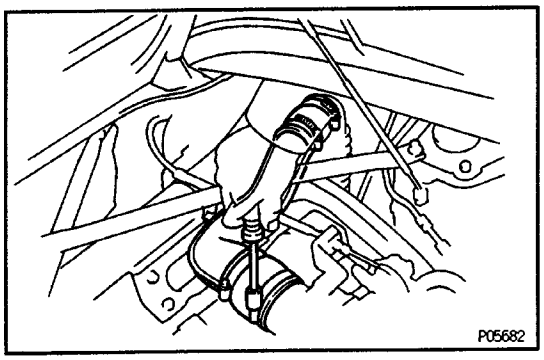

8. REINSTALL NO.1 INTAKE AIR CONNECTOR

9. RECONNECT HIGH–TENSION CORDS TO SPARK PLUGS

10. RECONNECT DISTRIBUTOR CONNECTOR

CYLINDER BLOCK

EG0WK–01

COMPONENTS FOR ENGINE REMOVAL AND INSTALLATION

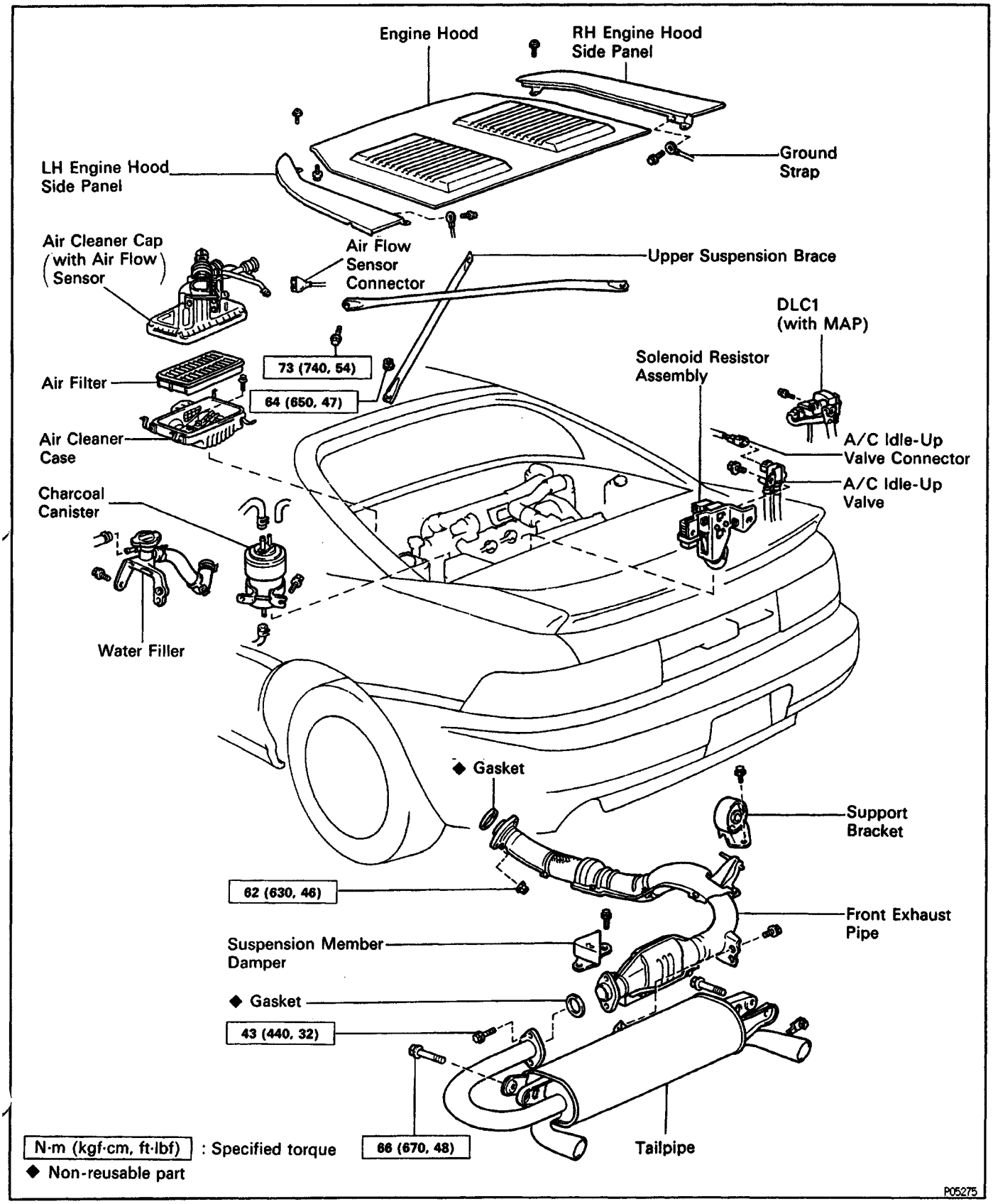

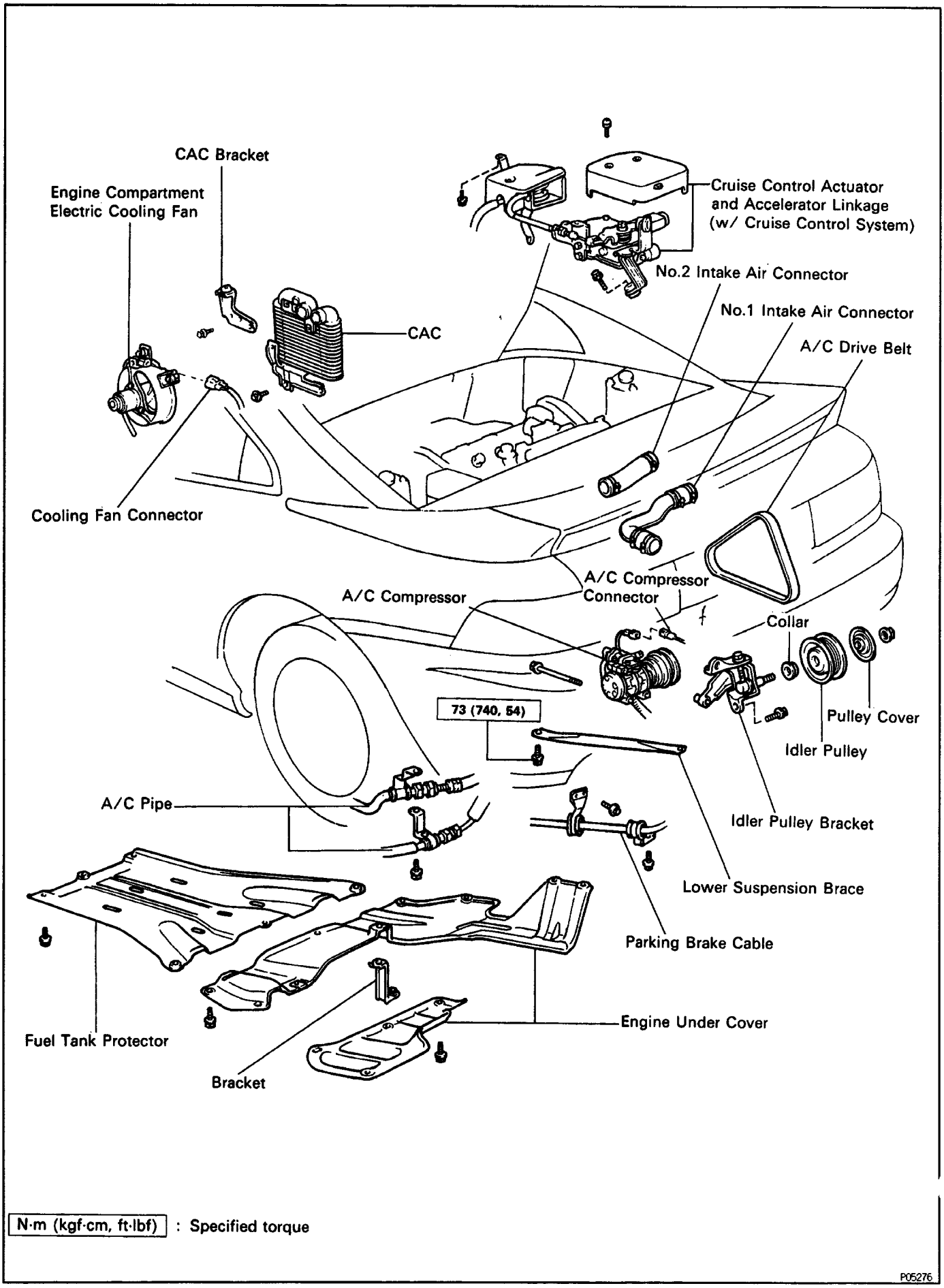
CAC Bracket
Engine Compartment Electric Cooling Fan
Cruise Control Actuator and Accelerator Linkage (w/ Cruise Control System)
No.2 Intake Air Connector
No.1 Intake Air Connector
A/C Drive Belt
CAC
Cooling Fan Connector
A/C Compressor Connector
A/C Compressor
Collar
Pulley Cover
Idler Pulley
73 (740, 54)
A/C Pipe
Idler Pulley Bracket
Lower Suspension Brace
Parking Brake Cable
Engine Under Cover
Fuel Tank Protector
Bracket
N·m (kgf·cm, ft·lbf) : Specified torque
P05276

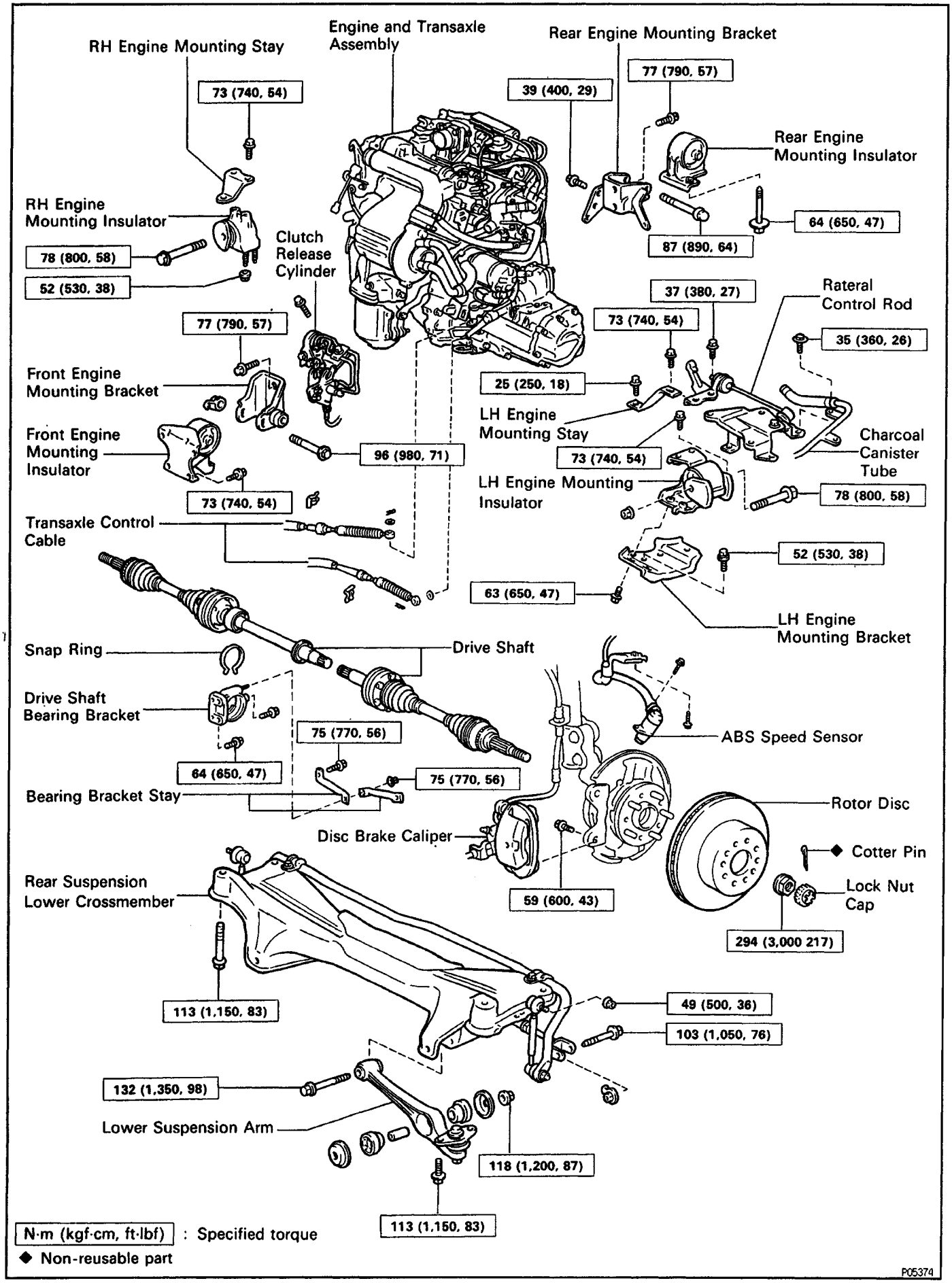
RH Engine Mounting Stay
Engine and Transaxle Assembly
Rear Engine Mounting Bracket
73 (740, 54)
39 (400, 29)
77 (790, 57)
Rear Engine Mounting Insulator
RH Engine Mounting Insulator
64 (650, 47)
78 (800, 58)
Clutch Release Cylinder
87 (890, 64)
52 (530, 38)
37 (380, 27)
Rateral Control Rod
77 (790, 57)
73 (740, 54)
35 (360, 26)
Front Engine Mounting Bracket
25 (250, 18)
LH Engine Mounting Stay
Front Engine Mounting Insulator
96 (980, 71)
73 (740, 54)
Charcoal Canister Tube
LH Engine Mounting Insulator
73 (740, 54)
78 (800, 58)
Transaxle Control Cable
52 (530, 38)
63 (650, 47)
LH Engine Mounting Bracket
Snap Ring
Drive Shaft
Drive Shaft Bearing Bracket
ABS Speed Sensor
75 (770, 56)
64 (650, 47)
75 (770, 56)
Bearing Bracket Stay
Rotor Disc
Disc Brake Caliper
◆ Cotter Pin
Rear Suspension Lower Crossmember
59 (600, 43)
Lock Nut Cap
294 (3,000 217)
113 (1,150, 83)
49 (500, 36)
103 (1,050, 76)
132 (1,350, 98)
Lower Suspension Arm
118 (1,200, 87)
113 (1,150, 83)
N·m (kgf·cm, ft·lbf) : Specified torque
◆ Non-reusable part
P05374

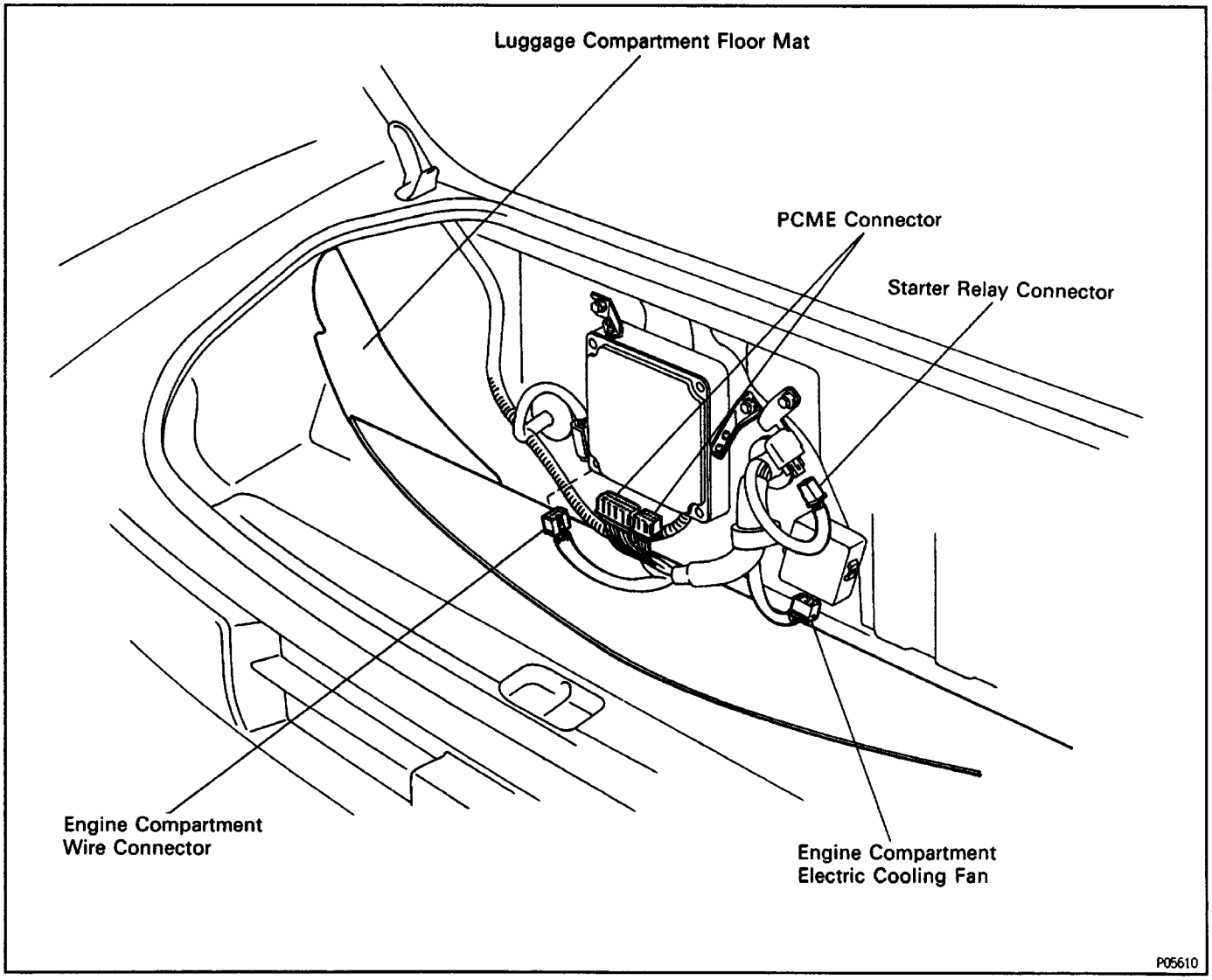

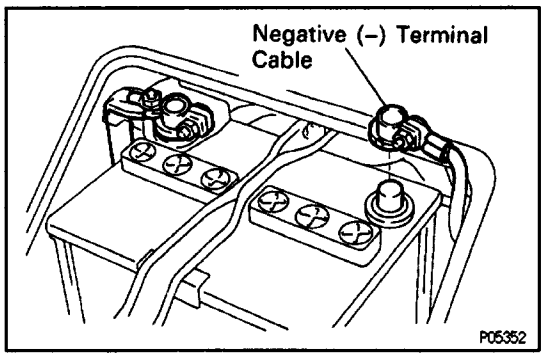

EGOWT–01

ENGINE REMOVAL

(See Components for Engine Removal and Installation)

1. DISCONNECT CABLE FROM NEGATIVE TERMINAL OF BATTERY

CAUTION: Turn the ignition switch to "LOCK". Disconnect the negative terminal from the battery. Wait at least 20 seconds before proceeding with work.

2. REMOVE ENGINE HOOD
3. REMOVE ENGINE HOOD SIDE PANELS
4. REMOVE ENGINE UNDER COVERS
5. DRAIN ENGINE COOLANT
6. DRAIN ENGINE OIL
7. DRAIN TRANSAXLE OIL

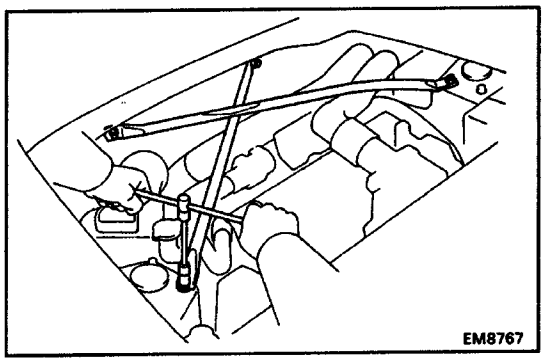

8. REMOVE UPPER SUSPENSION BRACE

Remove the two bolts, two nuts and suspension brace.

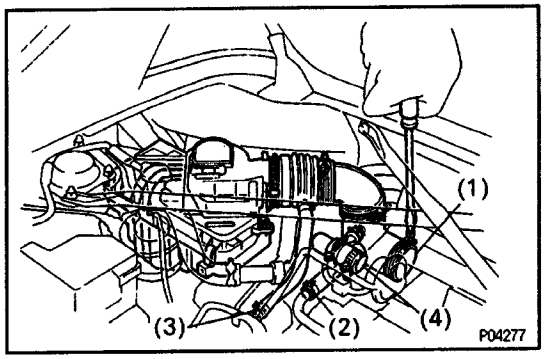

9. REMOVE AIR CLEANER HOUSING

(a) Disconnect the air flow sensor connector.
(b) Disconnect the following hoses:
  (1) Air cleaner hose from turbocharger
  (2) PCV hose from cylinder head cover
  (3) Air hose from No.2 air hose
  (4) Air hose from air by–pass valve

(c) Disconnect the four clamps, and remove the air cle–aner cap and air flow sensor assembly.
(d) Remove the air filter.
(e) Remove the three bolts and air cleaner case.

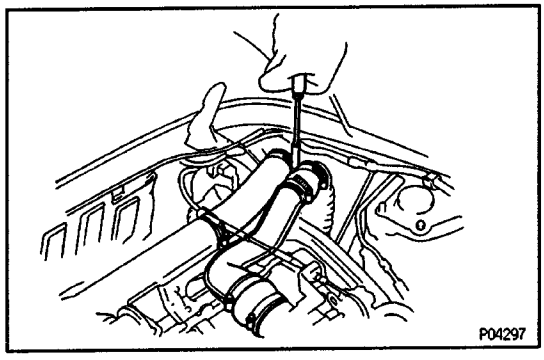

10. REMOVE N0.1 AND NO.2 INTAKE AIR CONNECTORS

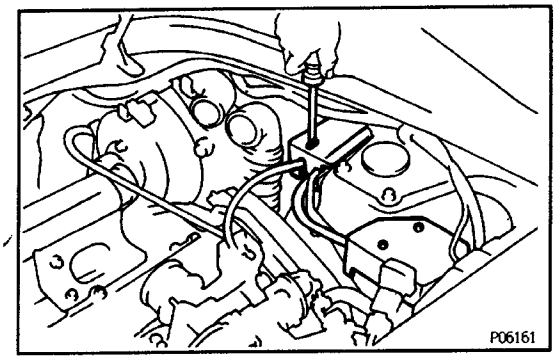

11. (w/ CRUISE CONTROL SYSTEM) REMOVE CRUISE CONTROL ACTUATOR AND ACCELERATOR LINKAGE

12. (w/o CRUISE CONTROL SYSTEM) DISCONNECT ACCELERATOR LINKAGE FROM THROTTLE BODY

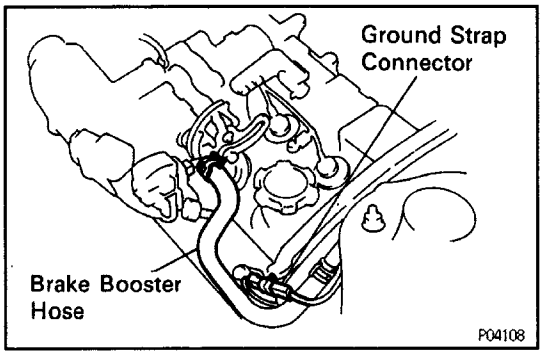

13. DISCONNECT GROUND STRAP CONNECTOR

14. DISCONNECT BRAKE BOOTER VACUUM HOSE

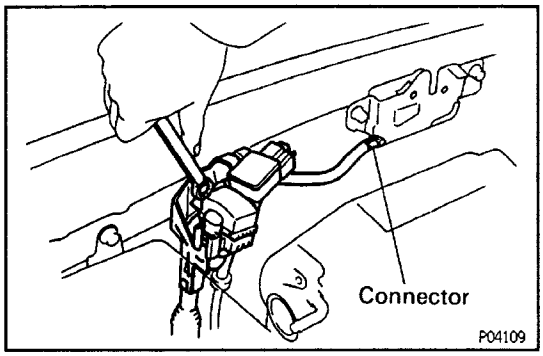

15. DISCONNECT DATA LINK CONNECTOR 1 AND MAP

(a) Disconnect the engine hood courtesy switch connector.

(b) Remove the bolt, and disconnect the data link connector 1 and MAP from the body.

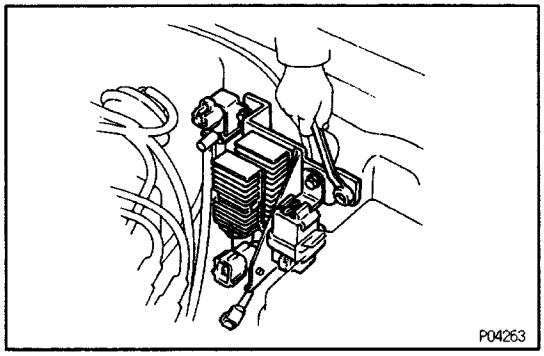

16. DISCONNECT A/C IDLE–UP VALVE, AND REMOVE SOLENOID RESISTOR ASSEMBLY

(a) Disconnect the following connectors:

- Solenoid resistor connector
- Fuel pump relay connector
- Fuel pump resistor connector

(b) Remove the two bolts, and disconnect the A/C idle – up from the body. Remove the solenoid resistor assembly.

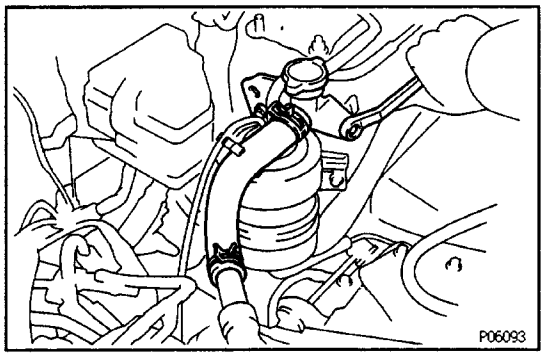

17. REMOVE WATER FILLER

(a) Disconnect the following hoses:

(1) Water filler hose

(2) Coolant reservoir hose

(b) Remove the two bolts and water filler.

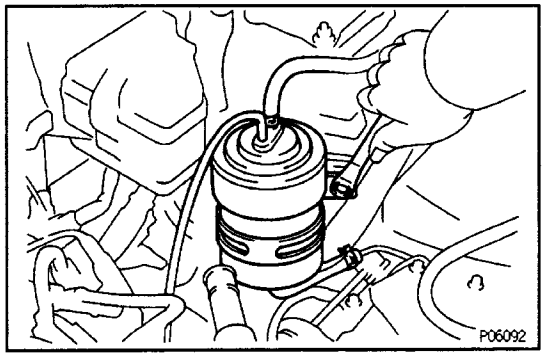

18. REMOVE CHARCOAL CANISTER

(a) Disconnect the three hoses from the charcoal canister.

(b) Remove the two bolts and charcoal canister.

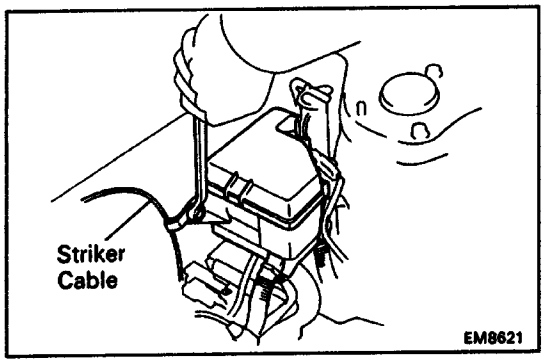

19. REMOVE ENGINE RELAY BOX, AND DISCONNECT ENGINE WIRE

(a) Remove the two bolts and relay box. Disconnect the luggage compartment striker cable.

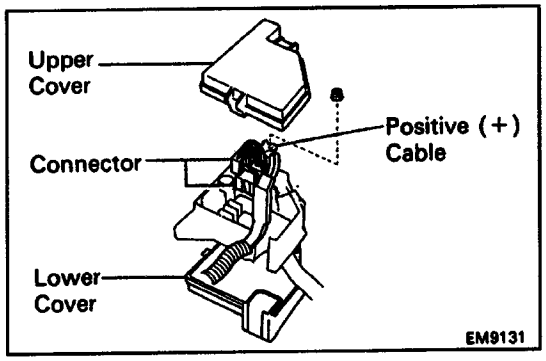

(b) Remove the upper and lower covers from the relay box.

(c) Disconnect the positive (+) cable and two connectors of the engine wire from the relay box.

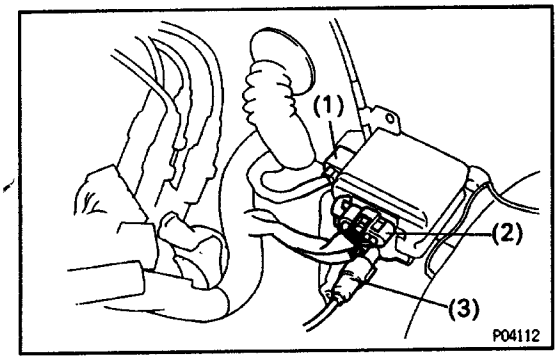

20. DISCONNECT CONNECTORS AND HIGH–TENSION CORD

Disconnect the following connectors and cord:

(1) Noise filter connector

(2) Igniter connector

(3) High–tension cord from ignition coil

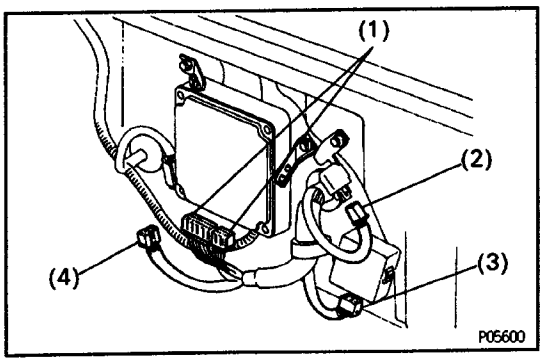

21. DISCONNECT ENGINE WIRE FROM LUGGAGE COMPARTMENT

(a) Disconnect the following connectors:

(1) Two PCME connectors

(2) Starter relay connector

(3) Engine compartment electric cooling fan con–nector

(4) Engine compartment wire connector

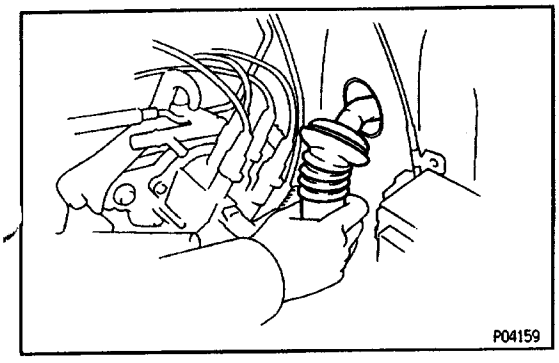

(b) Pull out the engine wire from the luggage compart–ment.

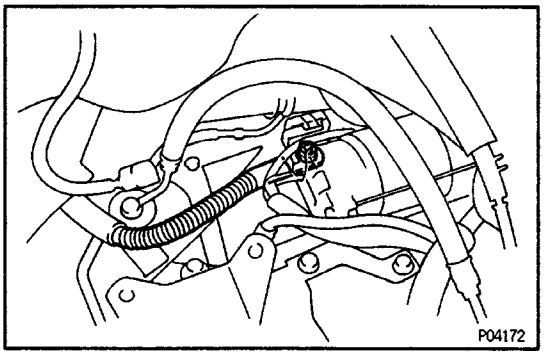

22. DISCONNECT STARTER CABLE

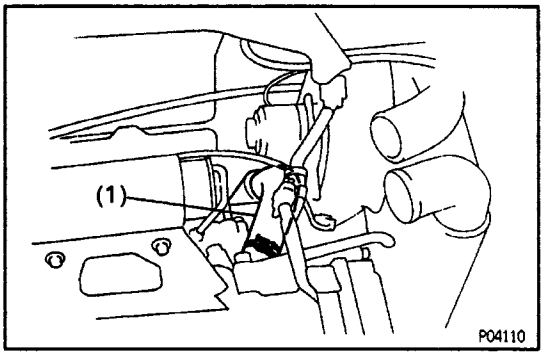

23. DISCONNECT HOSES

Disconnect the following connectors:
(1) Radiator hose from water inlet

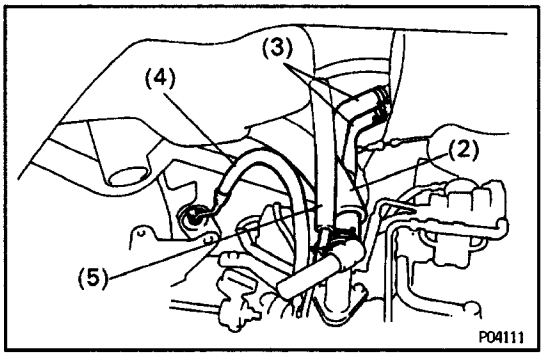

(2) Radiator hose from water outlet
(3) Two heater water hoses
(4) Fuel inlet hose from fuel filter
(5) Fuel return hose
CAUTION: Catch leaking fuel in a container.

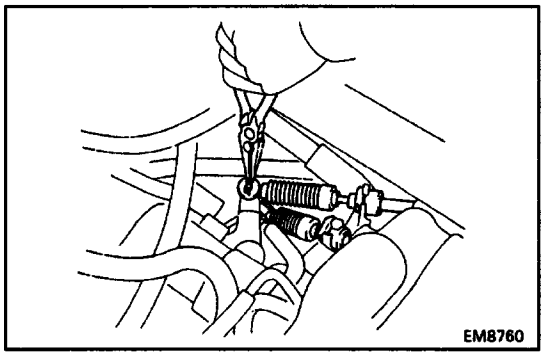

24. DISCONNECT TRANSAXLE CONTROL CABLES FROM TRANSAXLE

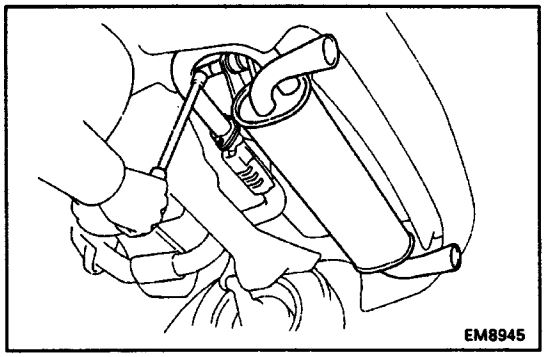

25. REMOVE TAILPIPEE

(a) Remove the two bolts holding the front exhaust pipe bracket to the tailpipe bracket.
(b) Remove the two bolts holding the front exhaust pipe to the tailpipe.
(c) Remove the two bolts, tailpipe and gasket.

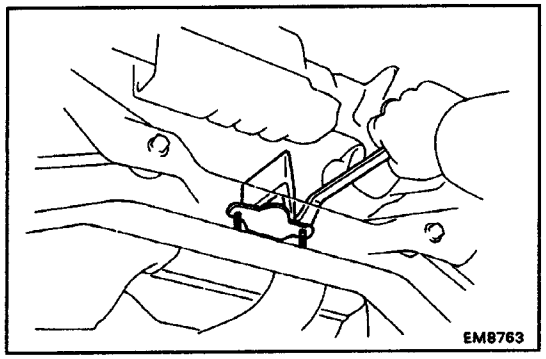

26. REMOVE FRONT EXHAUST PIPE

(a) Remove the two bolts and damper.

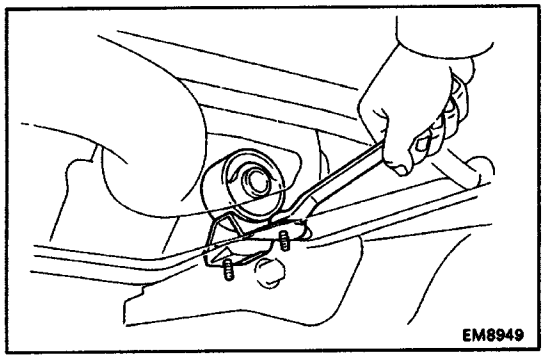

(b) Remove the two bolts and support bracket.

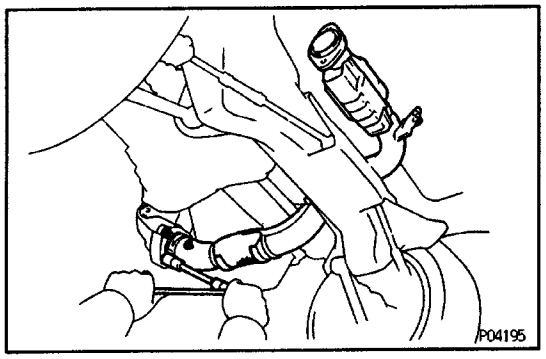

(c) Using a 14 mm deep wrench, remove the three nuts.
(d) Remove the exhaust pipe and gasket.

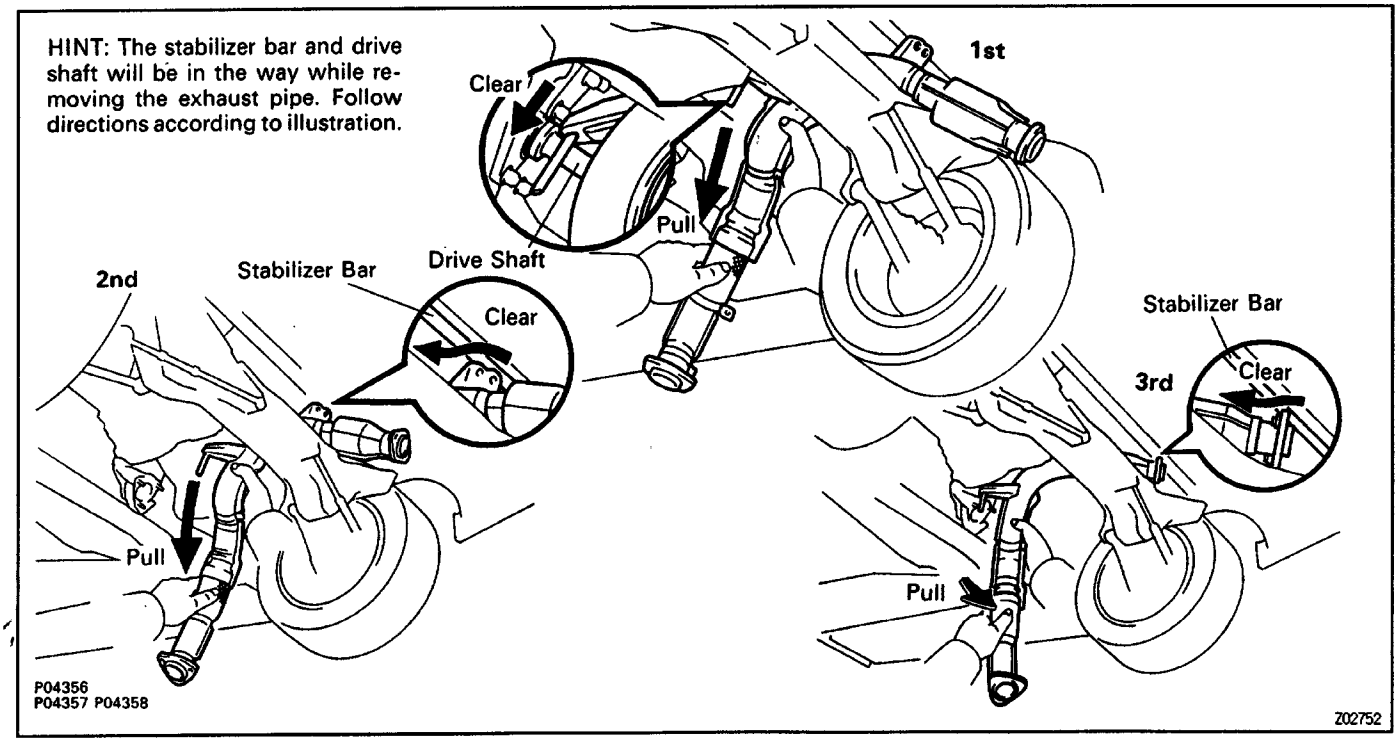

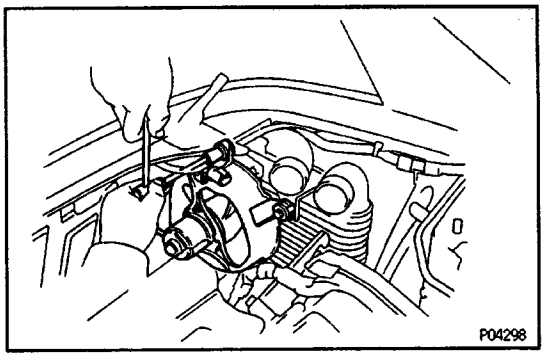

27. REMOVE ENGINE COMPARTMENT ELECTRIC COOLING FAN

(a) Disconnect the cooling fan connector.
(b) Loosen the three bolts, and remove the cooling fan.

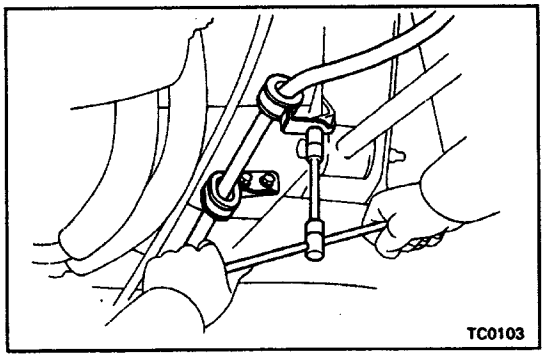

28. DISCONNECT A/C COMPRESSOR FROM ENGINE

(a) Remove the three clamp bolts, and disconnect the parking brake cable.

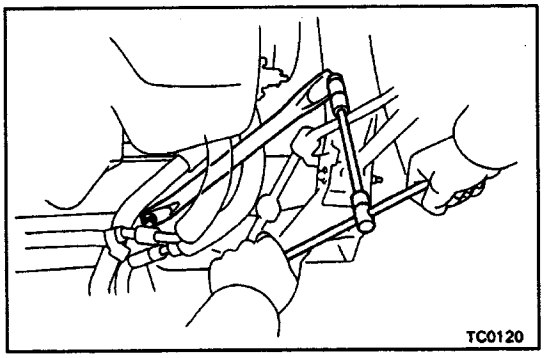

(b) Remove the two bolts and lower suspension brace.

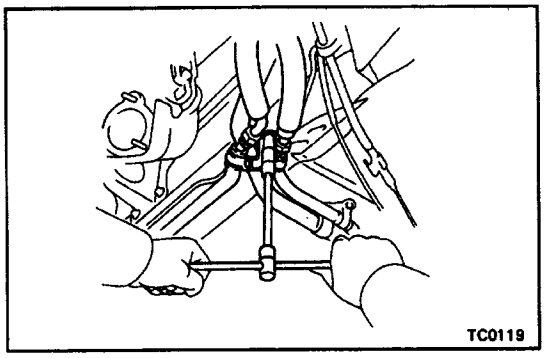

(c) Remove the clamp nut, and disconnect the two A/C pipes.

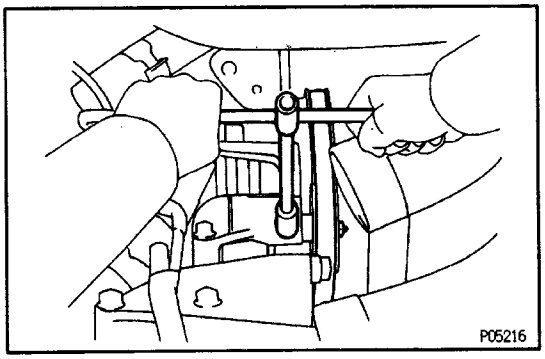

(d) Loosen the idler pulley nut.
(e) Loosen the adjusting bolt, and remove the drive belt,

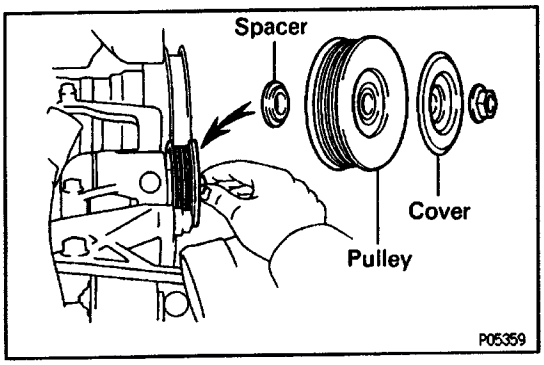

(f) Remove the nut, pulley cover, idler pulley and spacer.

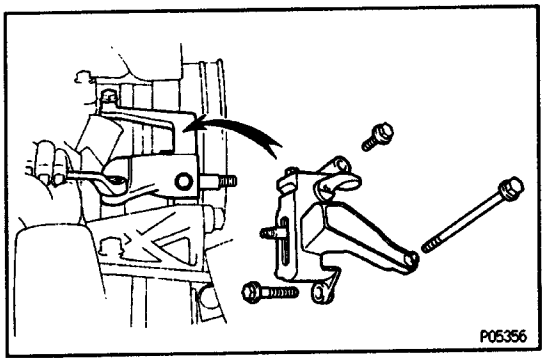

(g) Disconnect the A/C compressor connector.
(h) Remove the three bolts and idler pulley bracket.

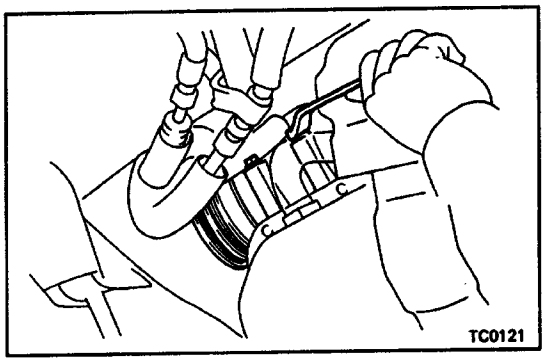

(i) Remove the two bolts, and disconnect the A/C compressor from the engine.

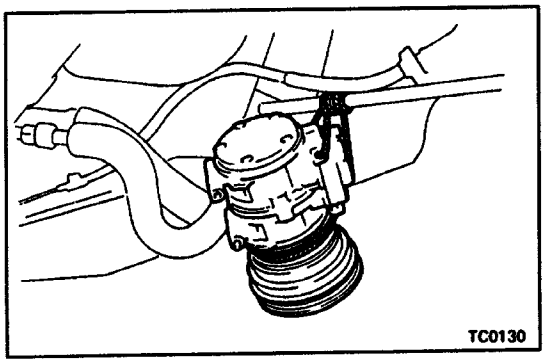

HINT: Suspend the A/C compressor to strut rod with a string.

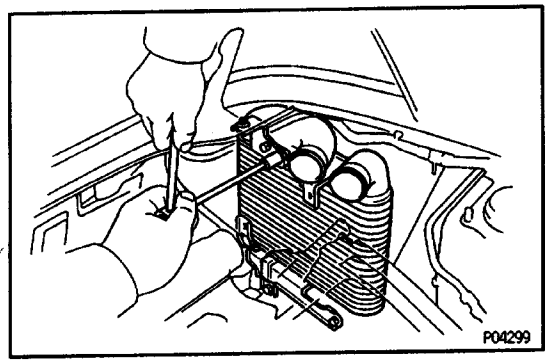

29. REMOVE CAC

(a) Remove the two bolts holding the CAC to the upper bracket.
(b) Remove the three bolts, upper bracket and CAC.

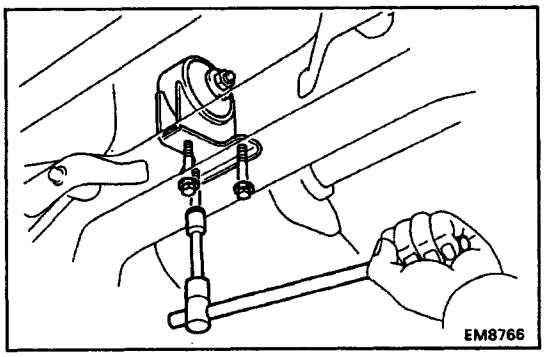

30. REMOVE REAR ENGINE MOUNTING INSULATOR

(a) Remove the through bolt holding the mounting insulator to the mounting bracket.

(b) Remove the three bolts and mounting insulator.



31. REMOVE DRIVE SHAFTS

(See Drive Shaft Removal in SA section)

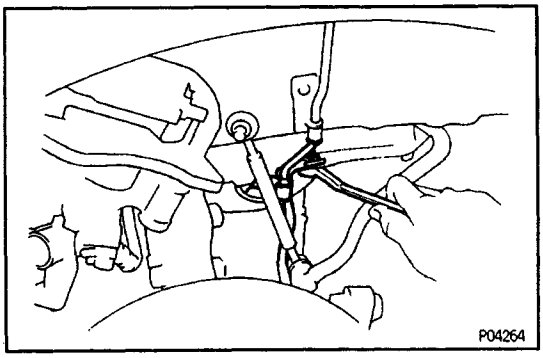

32. REMOVE REAR SUSPENSION CROSSMEMBER

(a) Remove the lower suspension arms.
(See Lower Suspension arm Removal in SA section)

(b) Remove the bolt, and disconnect the wire clamp of the ABS speed sensor from the suspension crossmember.

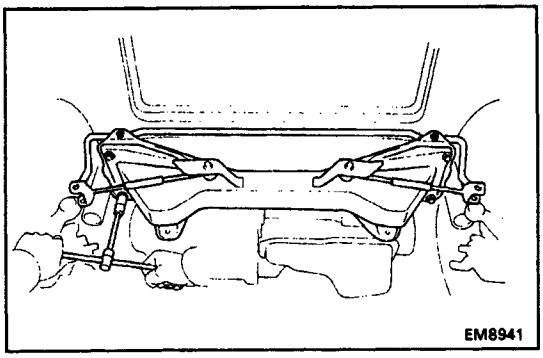

(c) Remove the four bolts and lower crossmember.

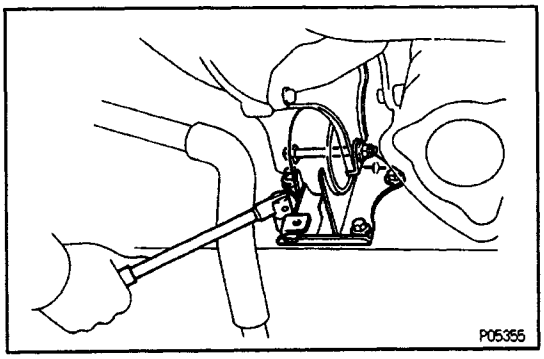

33. REMOVE FRONT ENGINE MOUNTING INSULATOR

(a) Remove the through bolt and nut holding the mounting insulator to the mounting bracket.

(b) Remove the four bolts and mounting insulator.

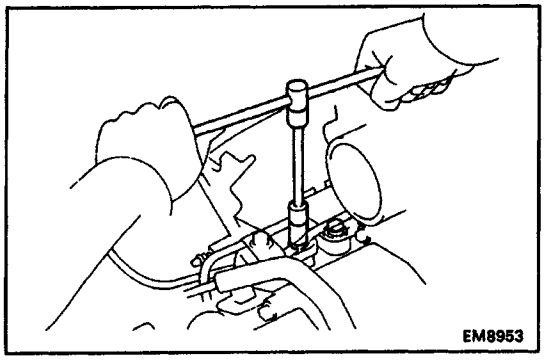

34. REMOVE FRONT ENGINE MOUNTING BRACKET

(a) Remove the two bolts holding the clutch release cyl–inder to the transaxle.

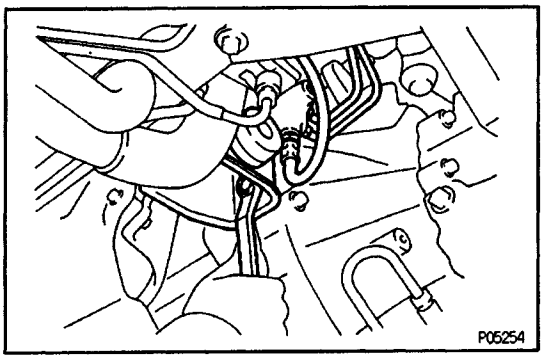

(b) Remove the two bolts and mounting bracket. Dis–connect the clutch release cylinder from the transaxle.

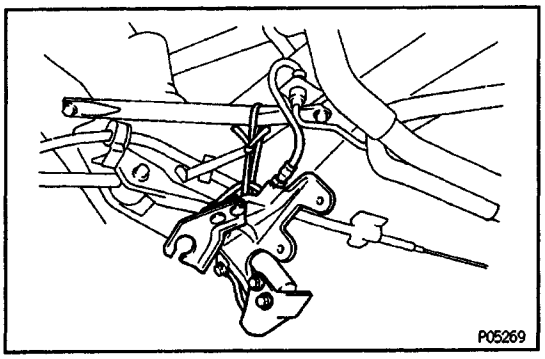

HINT: Suspend the clutch release cylinder to the suspension brace with a string.

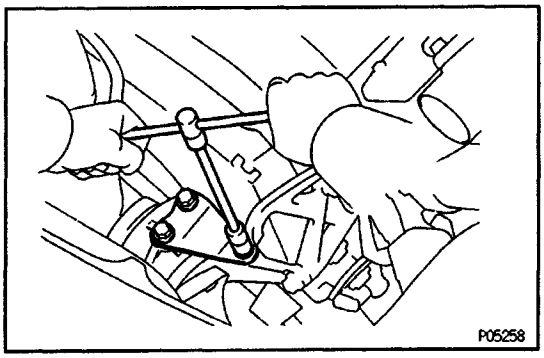

35. REMOVE RH ENGINE MOUNTING STAY

Remove the three bolts and mounting stay.

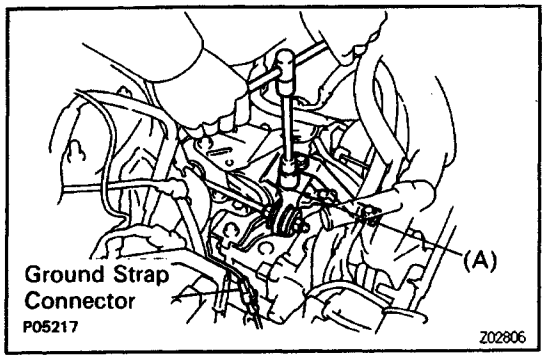

36. REMOVE LH ENGINE MOUNTING STAY

Remove the two bolts and mounting stay.

37. DISCONNECT LATERAL CONTROL ROD FROM LH ENGINE MOUNTING INSULATOR

Remove the bolt (A), and disconnect the lateral con–trol rod from the mounting insulator.

38. DISCONNECT GROUND STRAP CONNECTOR

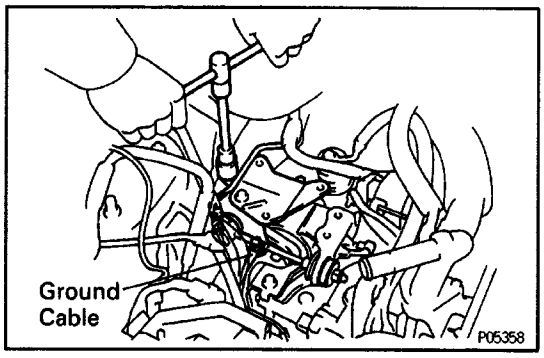

39. REMOVE LATERAL CONTROL ROD

Remove the four bolts and lateral control rod. Dis–connect the ground strap connector.

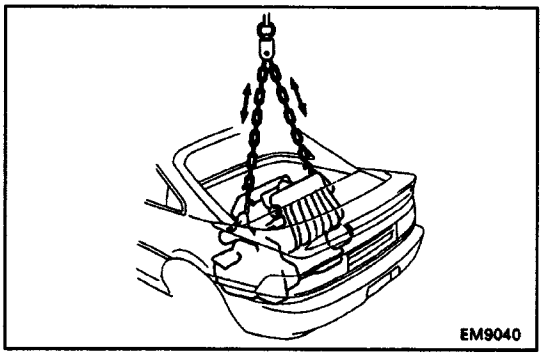

40. REMOVE ENGINE AND TRANSAXLE ASSEMBLY FROM VEHICLE

(a) Attach the engine sling device to the engine hangers.

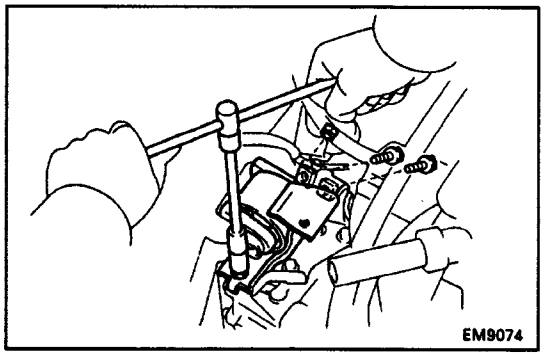

(b) Remove the through bolt, nut, three bolts and LH mounting insulator.

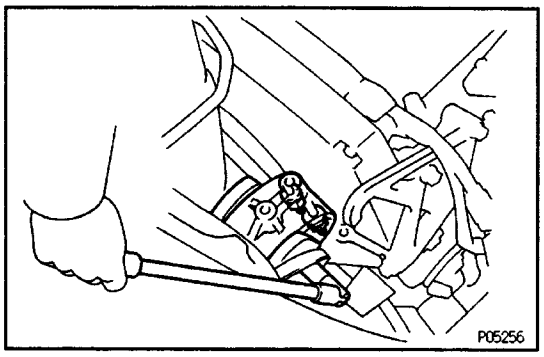

(c) Remove the through bolt, two nuts and RH mounting insulator.

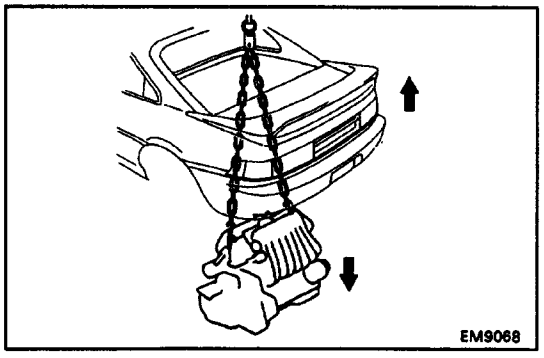

(d) Lower the engine out of the vehicle slowly and care–fully, and raise the vehicle.
HINT: Make sure the engine is clear of all wiring, hoses and cables.

(e) Place the engine and transaxle assembly onto the stand.

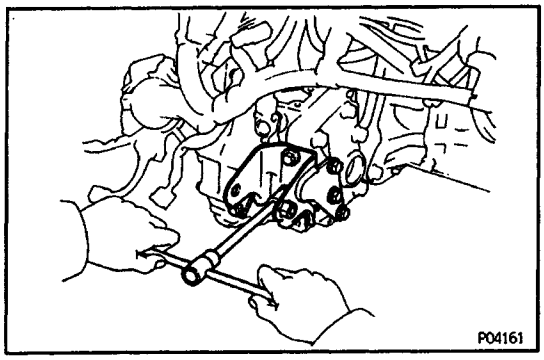

41. REMOVE REAR ENGINE MOUNTING BRACKET

Remove the six bolts and mounting bracket.

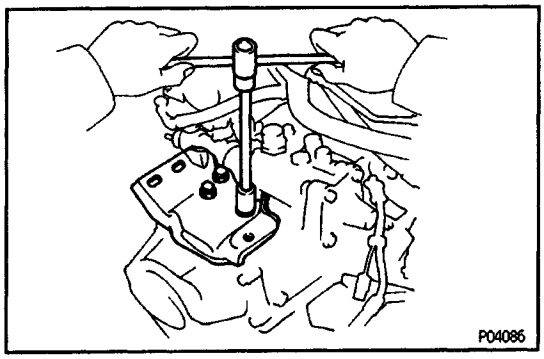

42. REMOVE LH ENGINE MOUNTING BRACKET

Remove the three bolts and mounting bracket.

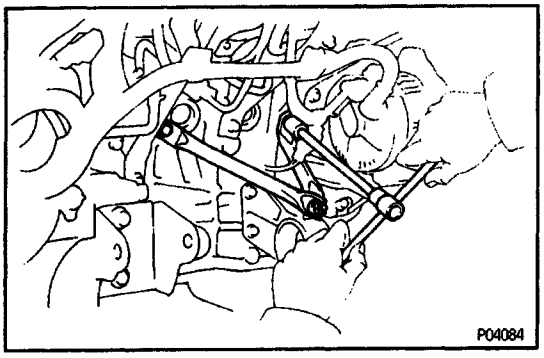

43. REMOVE DRIVE SHAFT BEARING BRACKET

(a) Remove the two bolts, nut and bearing bracket stay.

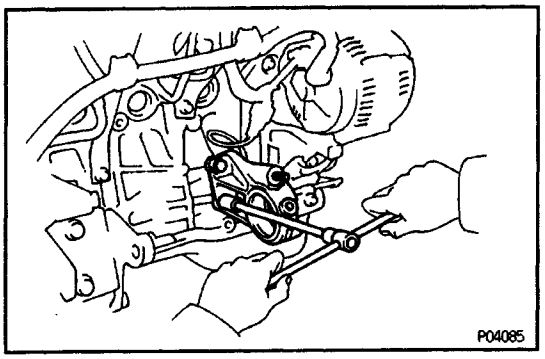

(b) Remove the two bolts and bearing bracket.

COMPONENTS FOR ENGINE & TRANSAXLE SEPARATION AND ASSEMBLY

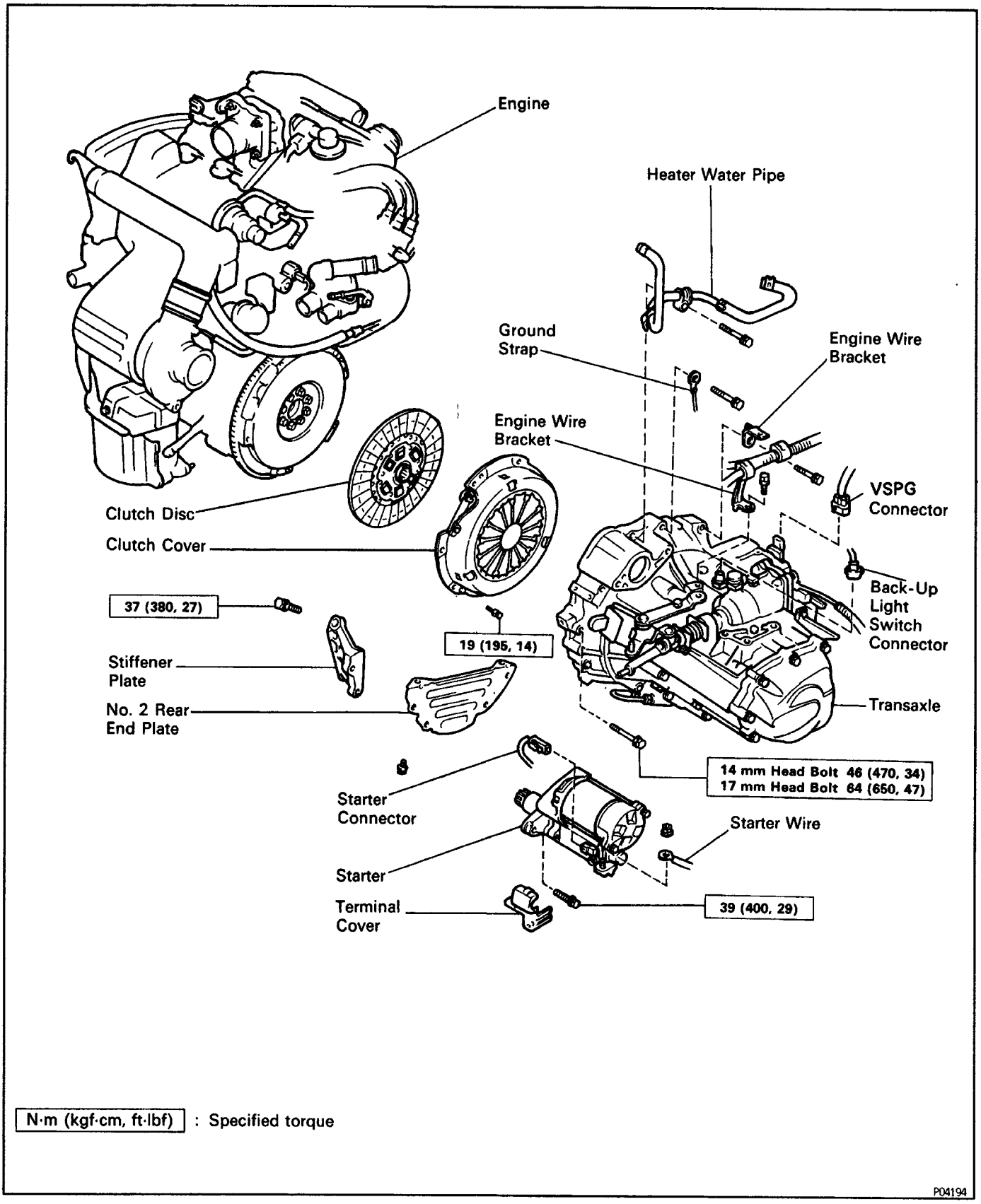

ENGINE AND TRANSAXLE SEPARATION

(Components for Engine & Transaxle Separation and Assembly)

1. DISCONNECT ENGINE WIRE

(a) Remove the terminal cover from the starter.

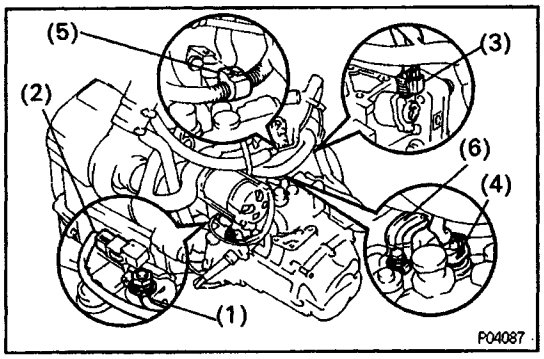

(b) Disconnect the following parts:

(1) Starter wire
(2) Starter connector
(3) Vehicle speed pulse generator connector
(4) Back–up light switch connector
(5) Engine wire clamp
(6) Engine wire bracket

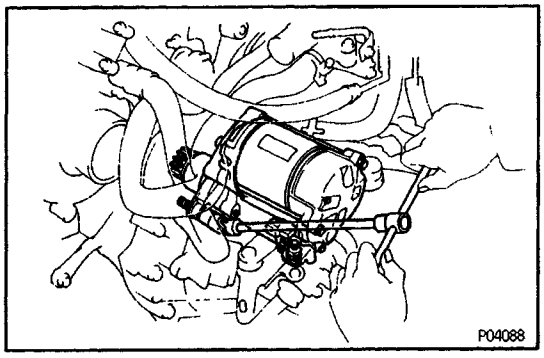

2. REMOVE STARTER

Remove the two bolts and starter.

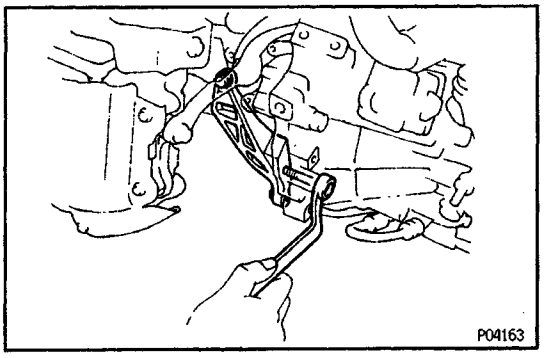

3. REMOVE STIFFENER PLATE

Remove the three bolts and stiffener plate.

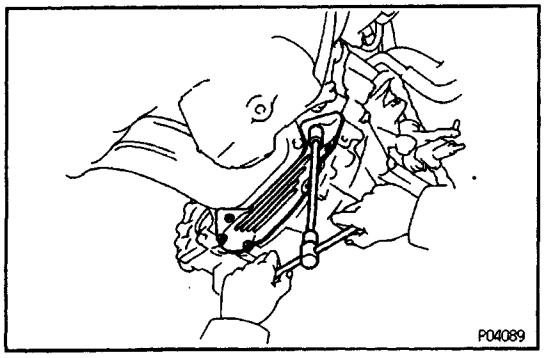

4. REMOVE N0.2 REAR END PLATE

Remove the four bolts and rear end plate.

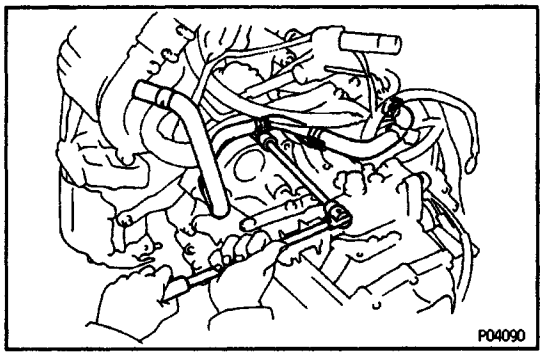

6. REMOVE HEATER WATER PIPE

(a) Disconnect the water hose from the water by–pass pipe.

(b) Remove the two bolts and heater water pipe.

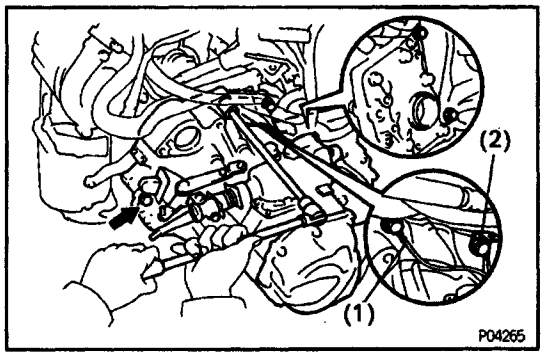

6. REMOVE TRANSAXLE

(a) Remove the five bolts and following parts:

(1) Ground strap

(2) Engine wire bracket

(b) Separate the transaxle and engine.

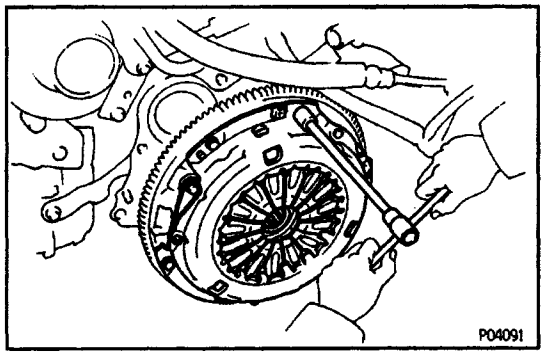

7. REMOVE CLUTCH COVER AND DISC

Remove the six bolts, clutch cover– and disc.

COMPONENTS FOR CYLINDER BLOCK DISASSEMBLY AND ASSEMBLY

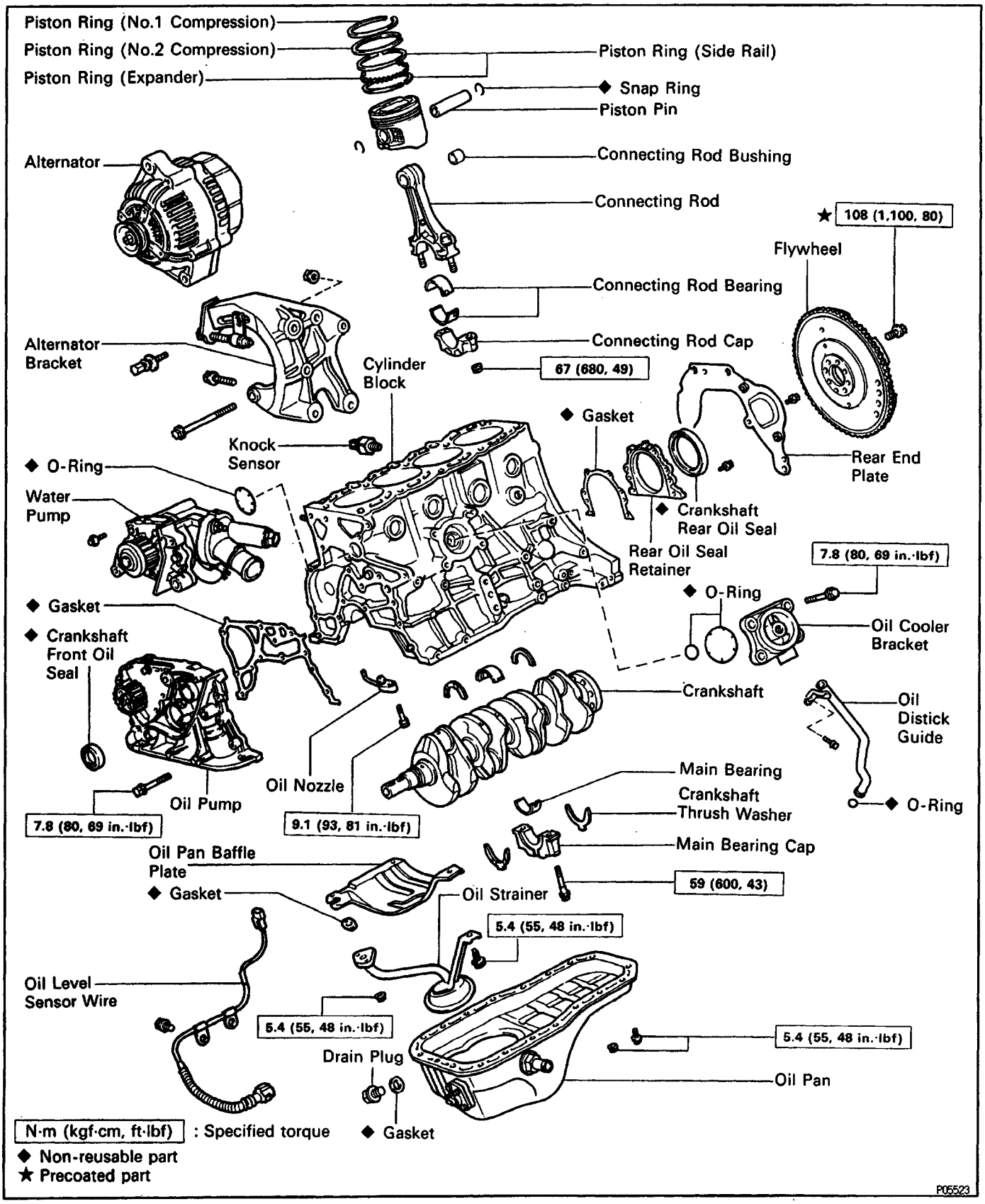

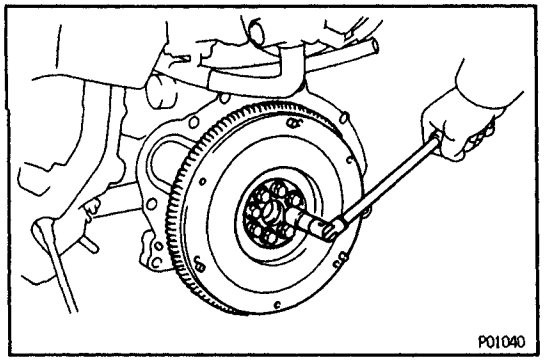

PREPARATION FOR DISASSEMBLY

EGOWR–01

1. REMOVE FLYWHEEL

Remove the eight bolts and flywheel.

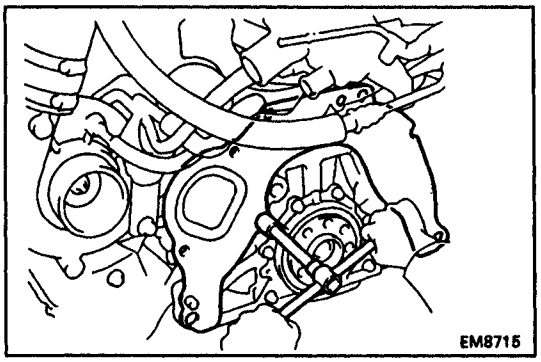

2. REMOVE REAR END PLATE

Remove the bolt and end plate.

3. INSTALL ENGINE TO ENGINE STAND FOR DISASSEMBLY

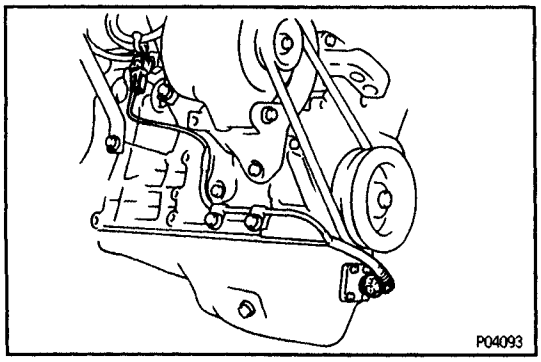

4. REMOVE OIL LEVEL SENSOR WIRE

(a) Disconnect the two connectors.

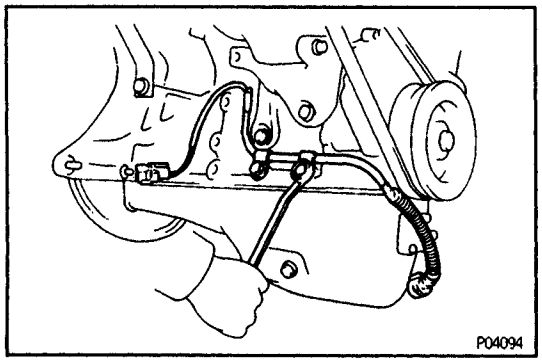

(b) Remove the two bolts and sensor wire.

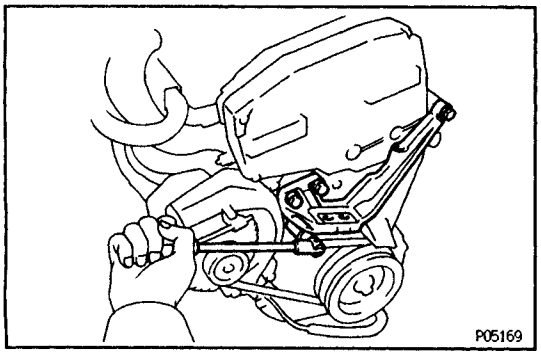

5. REMOVE RH ENGINE MOUNTING BRACKET

Remove the four bolts and mounting bracket.

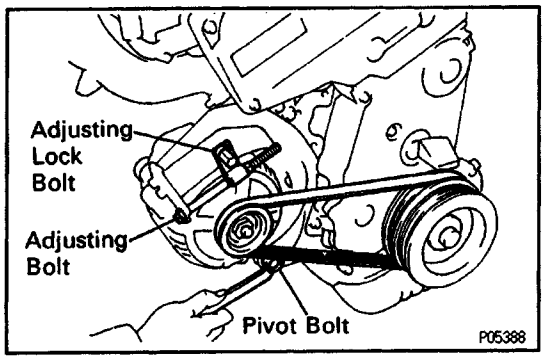

6. REMOVE ALTERNATOR

(a) Loosen the pivot bolt and adjusting lock bolt.

(b) Loosen the adjusting bolt, and disconnect the drive belt from the alternator.

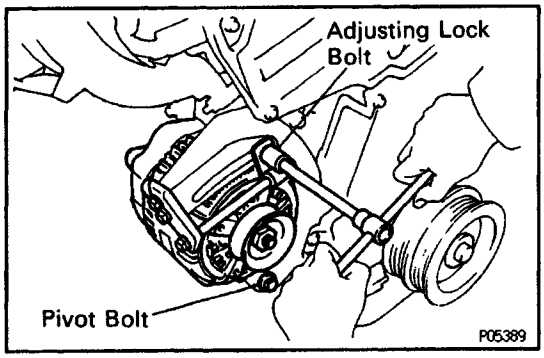

(c) Remove the pivot bolt and adjusting lock bolt, and disconnect the alternator from the bracket.

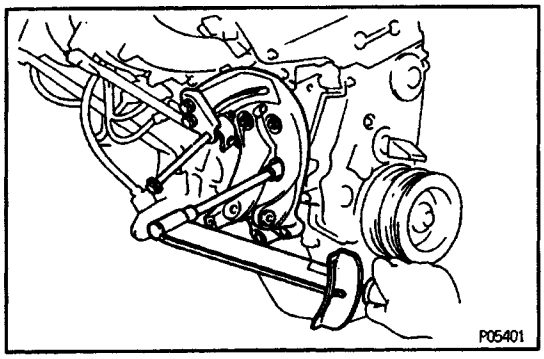

7. REMOVE ALTERNATOR BRACKET

Remove the three bolts, two nuts and alternator bracket.

8. REMOVE TIMING BELT AND PULLEYS
(See Timing Belt Removal)

9. REMOVE CYLINDER HEAD
(See Cylinder Head Removal)

10. REMOVE OIL PAN AND OIL PUMP
(See Oil Pump Removal)

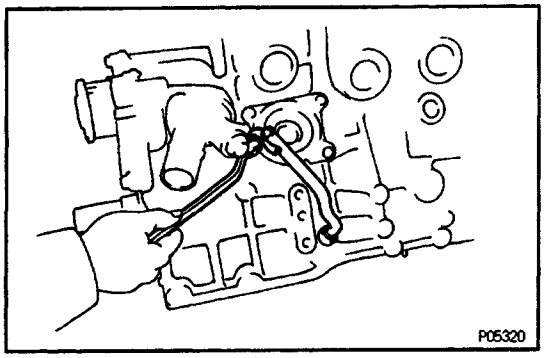

11. REMOVE OIL DIPSTICK GUIDE

Remove the bolt, and pull out the dipstick guide.

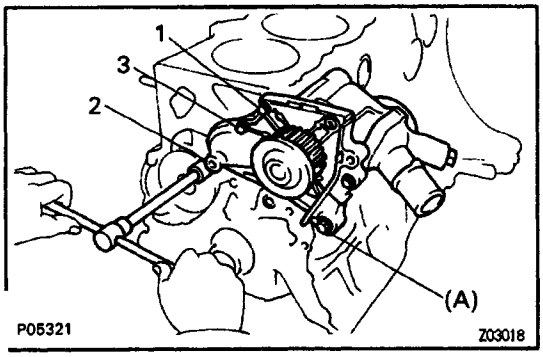

12. REMOVE WATER PUMP

(a) (w/o A/C)

Remove the bolt (A).

(b) Remove the three bolts in the sequence shown.

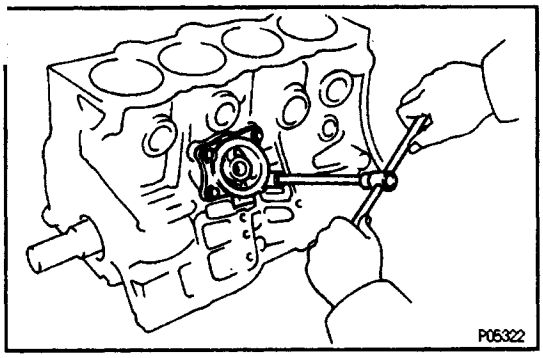

13. REMOVE OIL COOLER BRACKET

(a) Remove the four bolts and oil cooler bracket.

(b) Remove the two 0–rings from the oil cooler bracket.

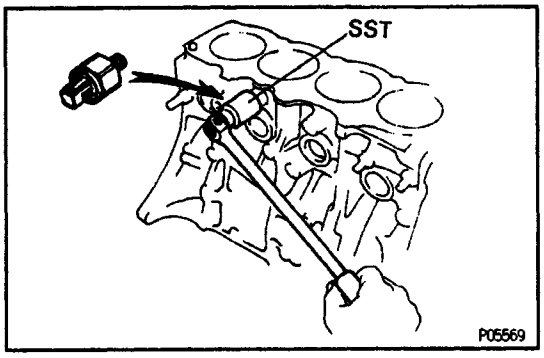

14. REMOVE KNOCK SENSOR

Using SST, remove the knock sensor.

SST 09816 – 30010

CYLINDER BLOCK DISASSEMBLY EGGWS–01

(See Components for Cylinder Block Disassembly and Assembly)

1. REMOVE REAR OIL SEAL RETAINER

Remove the six bolts, retainer and gasket.

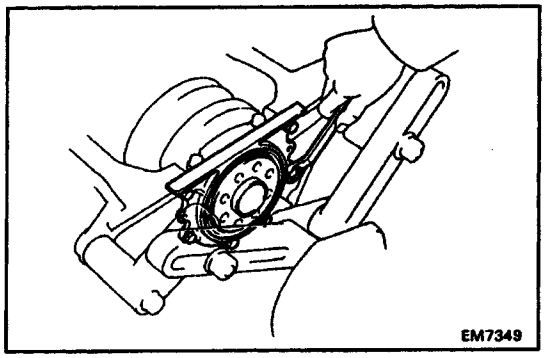

2. CHECK CONNECTING ROD THRUST CLEARANCE

Using a dial indicator, measure the thrust clearance while moving the connecting rod back and forth.

Standard thrust clearance: .

0.160 – 0.312 mm (0.0063 – 0.0123 in.)

Maximum thrust clearance:

0.35 mm (0.0138 in.)

If the thrust clearance is greater than maximum, re–place the connecting rod assembly. If necessary, re–place the crankshaft.

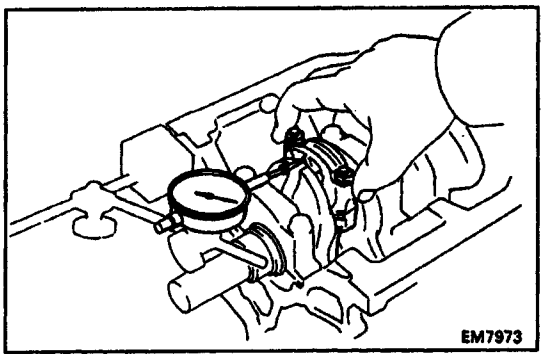

3. REMOVE CONNECTING ROD CAPS AND CHECK OIL CLEARANCE

(a) Check the matchrnarks on the connecting rod and cap to ensure correct reassembly.

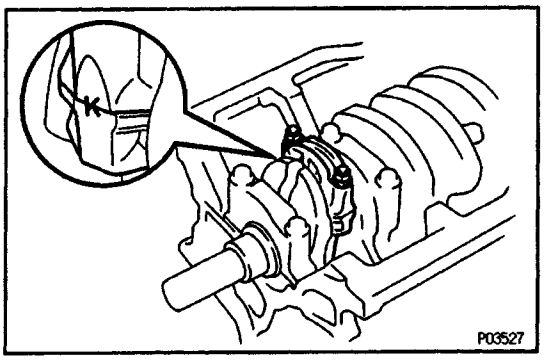

(b) Remove the connecting rod cap nuts.

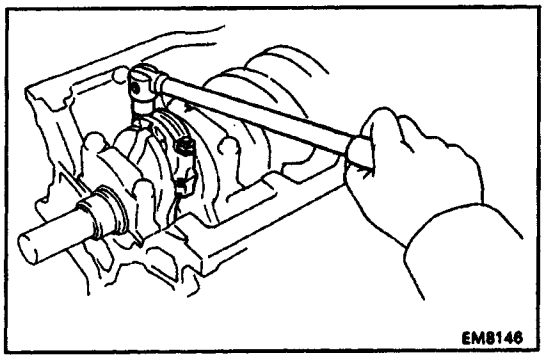

(c) Using a plastic–faced hammer, lightly tap the con–necting rod bolts and lift off the connecting rod cap.
HINT: Keep the lower bearing inserted with the con–necting cap.

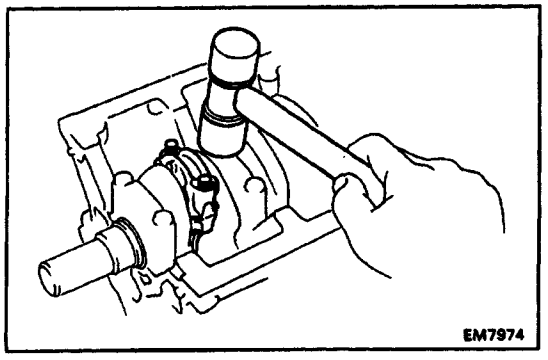

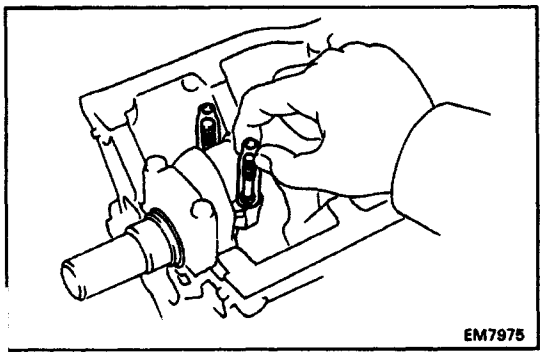

(d) Cover the connecting rod bolts with a short piece of hose to protect the crankshaft from damage.

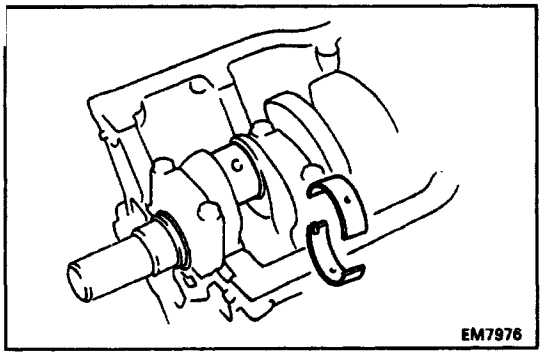

(e) Clean the crank pin and bearing.
(f) Check the crank pin and bearing for pitting and scr–atches.
If the crank pin or bearing is damaged, replace the bearings. If necessary, grind or replace the crankshaft.

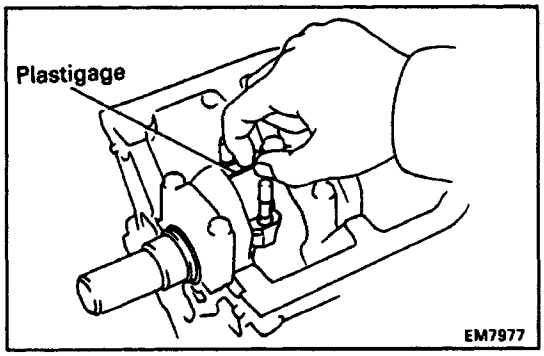

(g) Lay a strip of Plastigage across the crank pin.

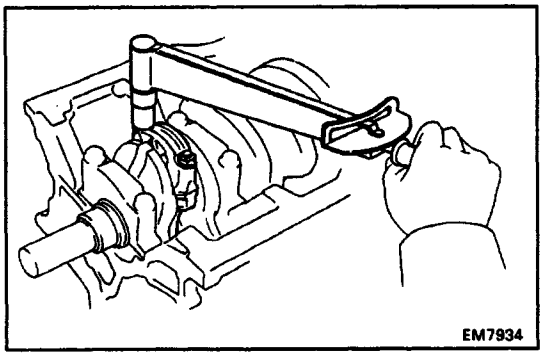

(h) Install the connecting rod cap.
(See step 6 in Cylinder Block Assembly)
Torque: 67 N–m (680 kgf–cm, 49 ft–lbf)
NOTICE: Do not turn the crankshaft.

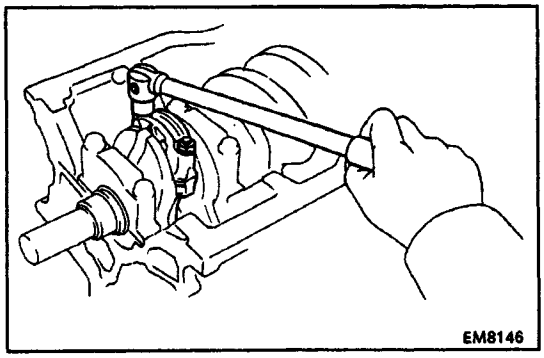

(i) Remove the connecting rod cap.
(See procedure (b) and (c) above)

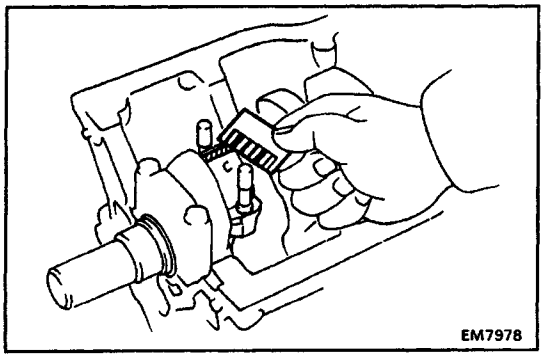

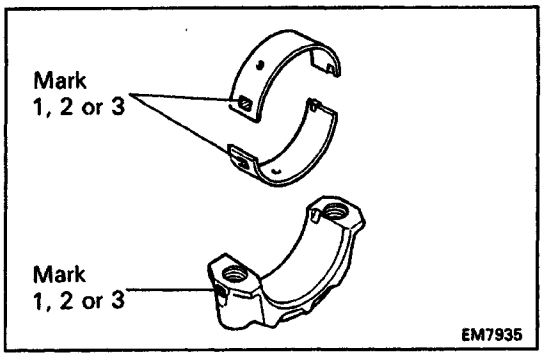

(j) Measure the Plastigage at its widest point.

Standard oil clearance:

STD

0.024 – 0.055 mm (0.0009 – 0.0022 in.)

U/S 0.25

0.023 – 0.069 mm (0.0009 – 0.0027 in.)

Maximum oil clearance:

0.08 mm (0.0031 in.)

If the oil clearance is greater than maximum, replace the bearings. If necessary, grind or replace the cra–nkshaft.

HINT: If using a standard bearing, replace it with one having the same number marked on the connecting rod cap. There are three sizes of standard bearings, marked "'1", "2" and "3" accordingly.

Standard sized bearing center wall thickness:

Mark '1'

1.484 – 1.488 mm (0.0584 – 0.0586 in.)

Mark '2'

1.488 – 1.492 mm (0.0586 – 0.0587 in.)

Mark '3'

1.492 – 1.496 mm (0.0587 – 0.0589 in.)

(k) Completely remove the Plastigage.

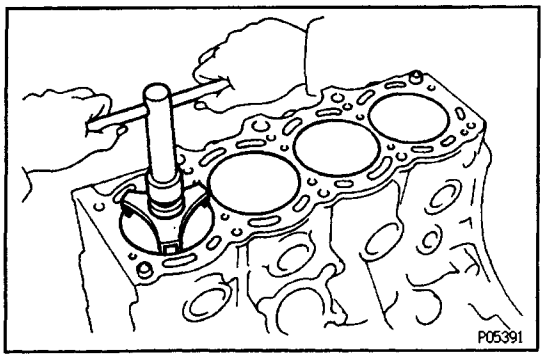

4. REMOVE PISTON AND CONNECTING ROD ASSEMBLIES

(a) Using a ridge reamer, remove all the carbon from the top of the cylinder.

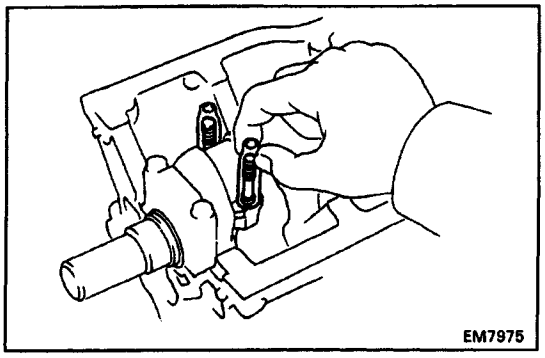

(b) Cover the connecting rod bolts with a short piece of hose to protect the crankshaft from damage.

(c) Push the piston, connecting rod assembly and upper bearing through the top of the cylinder block.

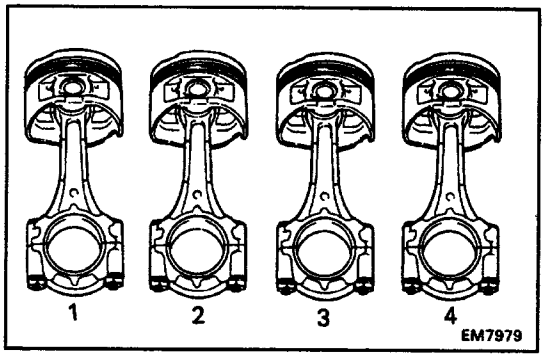

HINT:

- Keep the bearings, connecting rod and cap together.
- Arrange the piston and connecting rod assemblies in correct order.

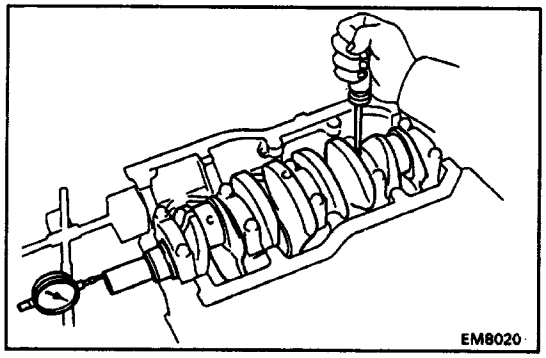

5. CHECK CRANKSHAFT THRUST CLEARANCE

Using a dial indicator, measure the thrust clearance while prying the crankshaft back and forth with a screwdriver.

Standard thrust clearance:

0.020 – 0.220 mm (0.0008 – 0.0087 in.)

Maximum thrust clearance:

0.30 mm (0.0118 in.)

If the thrust clearance is greater than maximum, replace the thrust washers as a set.

Thrust washer thickness:

2.440 – 2.490 mm (0.0961 – 0.0980 in.)

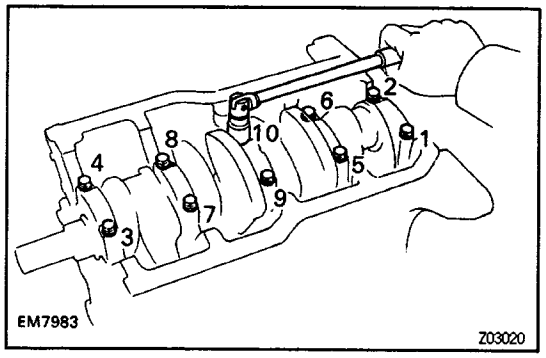

6. REMOVE MAIN BEARING CAPS AND CHECK OIL CLEARANCE

(a) Uniformly loosen and remove the main bearing cap bolts in several passes, in the sequence shown.

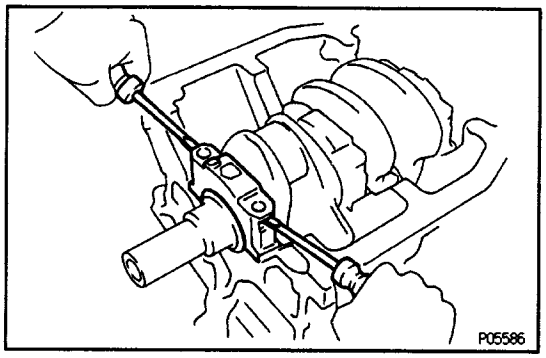

(b) Using two screwdrivers, pry out the main bearing cap, and remove the main bearing caps, lower bearing and remove the main bearing caps, lower bearings and lower and lower thrust washers (No.3 main bearing cap only).

HINT:

- Keep the lower bearing and main bearing cap together.
- Arrange the main bearing caps and lower thrust washers in correct order.

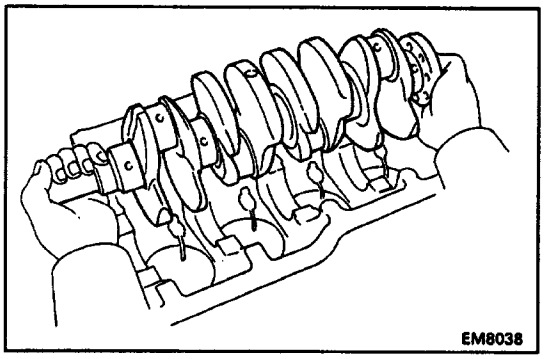

(c) Lift out the crankshaft.

HINT: Keep the upper bearing and upper thrust washers together with the cylinder block.

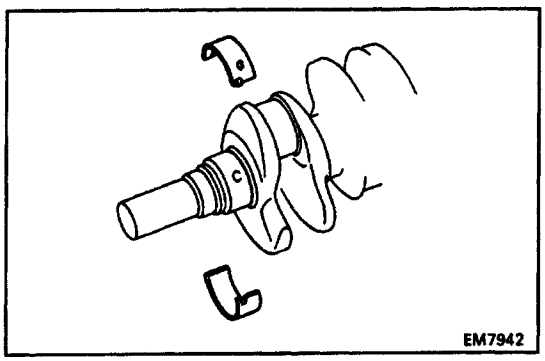

(d) Clean each main journal and bearing.
(e) Check each main journal and bearing for pitting and scratches.
If the journal or bearing is damaged, replace the bearings. If necessary, grind or replace the crankshaft.

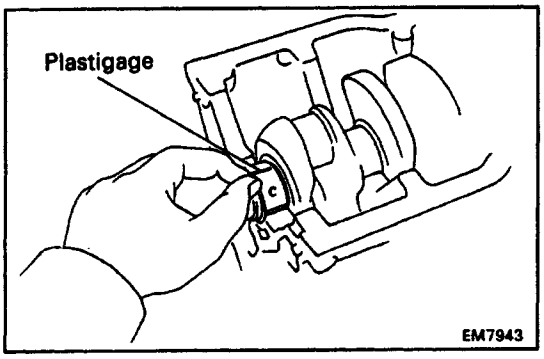

(f) Place the crankshaft on the cylinder block.
(g) lay a strip of Plastigage across each journal.

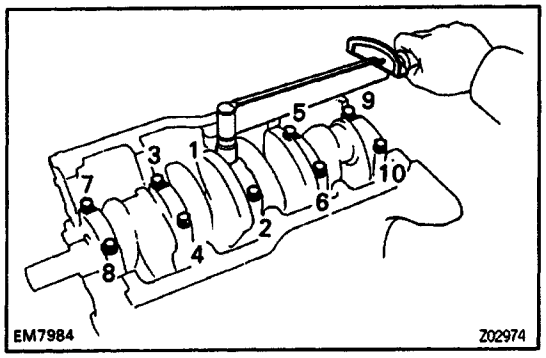

(h) Install the main bearing caps.
(See step 4 in Cylinder Block Assembly)
Torque: 59 N–m (600 kgf–cm, 43 ft–lbf)
NOTICE: Do not turn the crankshaft.

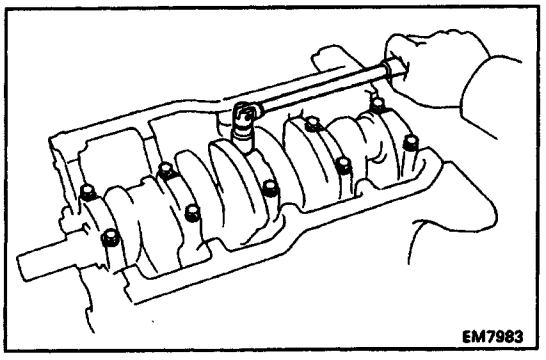

(i) Remove the main bearing caps.
(See procedure (a) and (b) above)

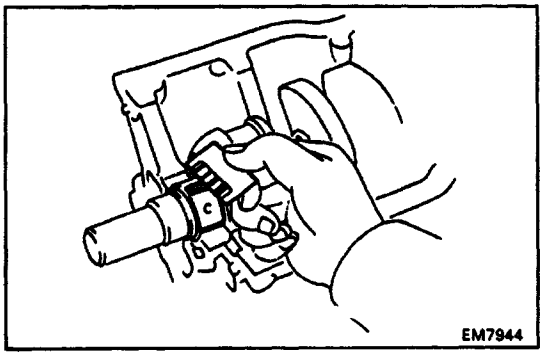

(j) Measure the Plastigage at its widest point.

Standard clearance:

N o.3

STD

0.025 – 0.044 mm (0.0010 – 0.0017 in.)

U/S 0.25

0.021 – 0.061 mm (0.0008 – 0.0024 in.)

Others

STD

0.015 – 0.034 mm (0.0006 – 0.0013 in.)

U/S 0.25

0.029 – 0.069 mm (0.0011 – 0.0027 in.)

Maximum clearance:

0.08 mm (0.0031 in.)

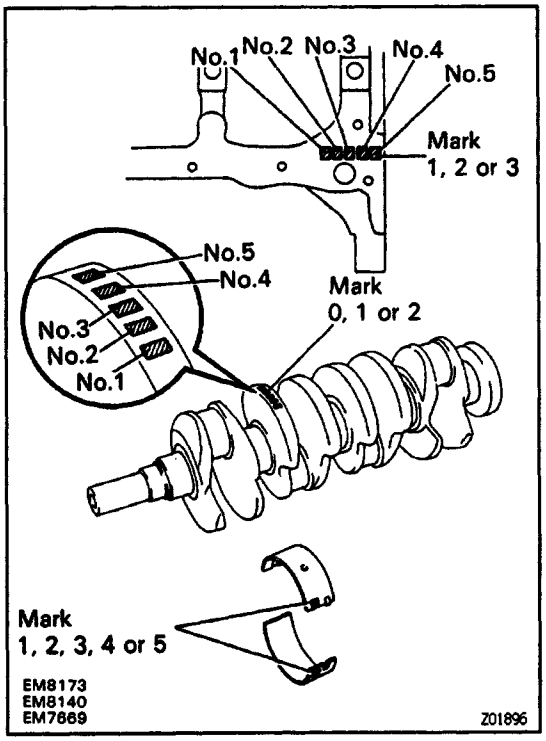

HINT: If replacing the cylinder block subassembly, the bearing standard clearance will be:

No.3

0.027 – 0.054 mm (0.0011 – 0.0021 in.)

Others

0.017 – 0.044 mm (0.0007 – 0.0017 in.)

If the oil clearance is greater than maximum, replace the bearings. If necessary, grind or replace the cra–nkshaft.

HINT: If using a standard bearing, replace it with one having the same number. If the number of the bearing cannot be determined, select the correct bearing by adding together the numbers imprinted on the cylin–der block and crankshaft, then selecting the bearing with the same number as the total. There are five sizes

of standard bearings, marked ’1’, ”2”, ”3”, ”4” and ”5” accordingly.

	Number marked								
Cylinder block	1			2			3		
Crankshaft	0	1	2	0	1	2	0	1	2
Use bearing	1	2	3	2	3	4	3	4	5

EXAMPLE: Cylinder block ”2” + Crankshaft ”1”
= Total number 3 (Use bearing ”3”)

V00240

(Reference)
Cylinder block main journal bore diameter:
Mark ’1’
59.020 – 59.026 mm (2.3236 – 2.3239 in.)
Mark ’2’
59.026 – 59.032 mm (2.3239 – 2.3241 in.)
Mark ”3”
59.032 – 59.038 mm (2.3241 – 2.3243 in.)
Crankshaft journal diameter:
Mark ’0”
54.998 – 55.003 mm (2.1653 – 2.1655 in.)
Mark ’1’
54.993 – 54.998 mm (2.1651 – 2.1653 in.)
Mark ’2’
54.988 – 54.993 mm (2.1649 – 2.1651 in.)
Standard sized bearing center wall thickness:
N o.3
Mark ”I”
1.992 – 1.995 mm (0.0784 – 0.0785 in.)
Mark ”2”
1.995 – 1.998 mm (0.0785 – 0.0787 in.)
Mark ’3’
1.998 – 2.001 mm (0.0787 – 0.0788 in.)
Mark ’4’
2.001 – 2.004 mm (0.0788 – 0.0789 in.)
Mark ”5”
2.004 – 2.007 mm (0.0789 – 0.0790 in.)
Others
Mark ’1’
1.997 – 2.000 mm (0.0786 – 0.0787 in.)
Mark ’2’
2.000 – 2.003 mm (0.0787 – 0.0789 in.)
Mark ’3”
2.003 – 2.006 mm (0.0789 – 0.0790 in.)
Mark ’4”
2.006 – 2.009 mm (0.0790 – 0.0791 in.)
Mark ’5”
2.009 – 2.012 mm (0.0791 – 0.0792 in.)

(k) Completely remove the Plastigage.

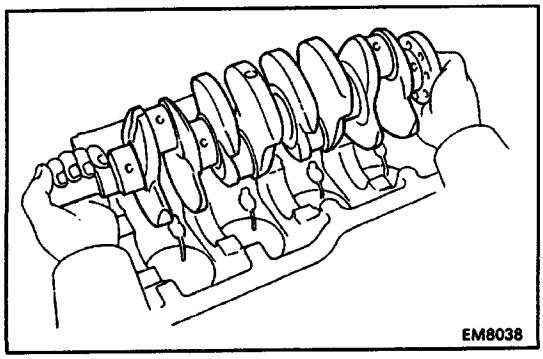

7. REMOVE CRANKSHAFT

(a) Lift out the crankshaft.
(b) Remove the upper bearings and upper thrust washers from cylinder block.

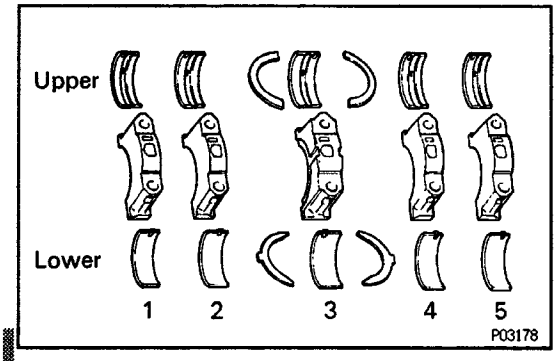

HINT: Arrange the main bearing caps, bearings and thrust washers in correct order.

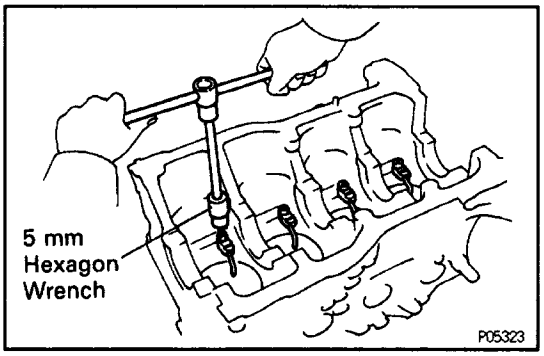

8. REMOVE OIL NOZZLES

Using a 5 mm hexagon wrench, remove the bolt and oil nozzle. Remove the four oil nozzles.

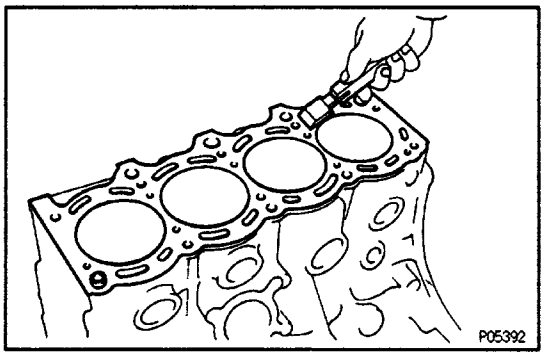

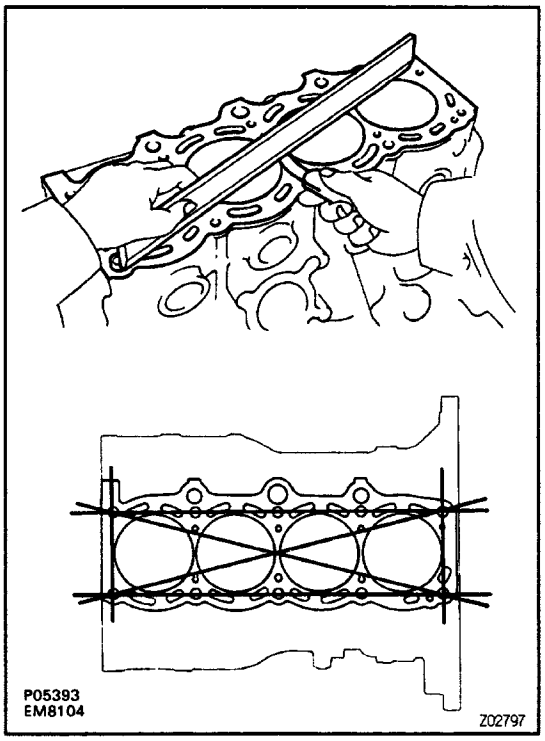

CYLINDER BLOCK INSPECTION

EG0BU–02

1. CLEAN CYLINDER BLOCK

A. Remove gasket material

Using a gasket scraper, remove all the gasket material from the top surface of the cylinder block.

B. Clean cylinder block

Using a soft brush and solvent, thoroughly clean the cylinder block.

2. INSPECT TOP SURFACE OF CYLINDER BLOCK FOR FLATNESS

Using a precision straight edge and feeler gauge, measure the surfaces contacting the cylinder head gasket for warpage.

Maximum warpage:

0.05 mm (0.0020 in.)

If warpage is greater than maximum, replace the cyl–inder block.

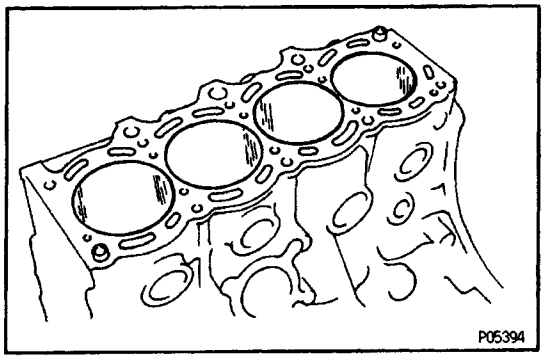

3. INSPECT CYLINDER FOR VERTICAL SCRATCHES

Visually check the cylinder for vertical scratches.
If deep scratches are present, rebore all the four cylinders. If necessary, replace the cylinder block.

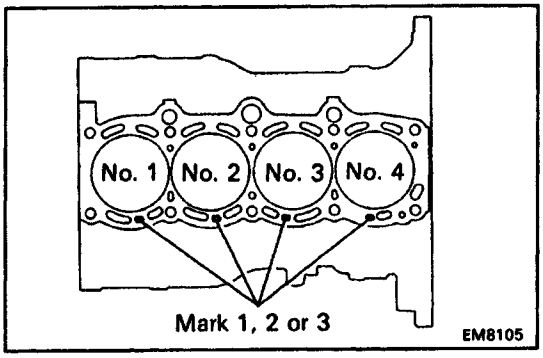

4. INSPECT CYLINDER BORE DIAMETER

HINT: There are three sizes of the standard cylinder bore diameter, marked "'1", "2" and "3" accordingly. The mark is stamped on the top of the cylinder block.

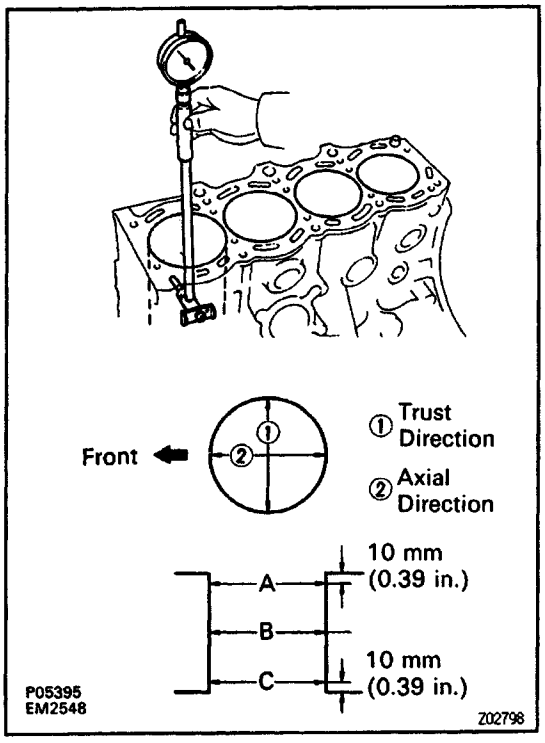

Using a cylinder gauge, measure the cylinder bore diameter at positions A, B and C in the thrust and axial directions.

Standard diameter:

Mark '1'

86.000 – 86.010 mm (3.3858 – 3.3862 in.)

Mark "2'

86.010 – 86.020 mm (3.3862 – 3.3866 in.)

Mark "3'

86.020 – 86.030 mm (3.3866 – 3.3870 in.)

Maximum diameter:

86.23 mm (3.4342 in.)

If the diameter is greater than maximum, rebore all the four cylinders. If necessary, replace the cylinder block.

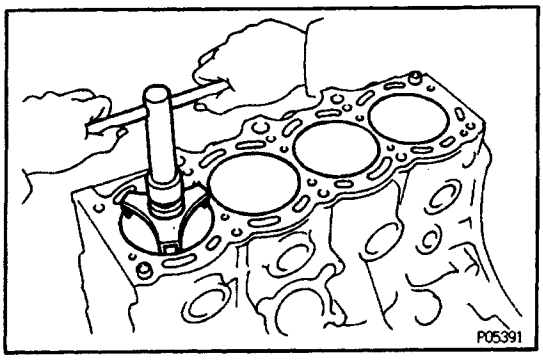

5. REMOVE CYLINDER RIDGE

If the wear is less than 0.2 mm (0.008 in.), using a ridge reamer, grind the top of the cylinder.

EGOBV–03

PISTON AND CONNECTING ROD DISASSEMBLY

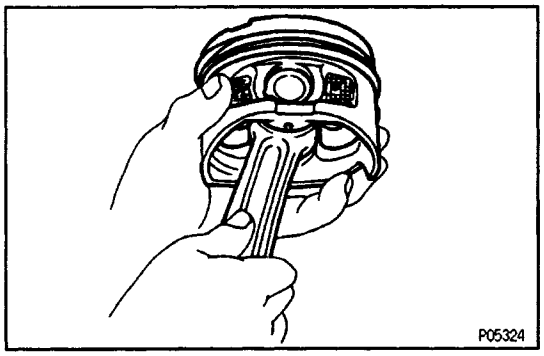

1. CHECK FIT BETWEEN PISTON AND PISTON PIN

Try to move the piston back and forth on the piston pin.

If any movement is felt, replace the piston and pin as a set.

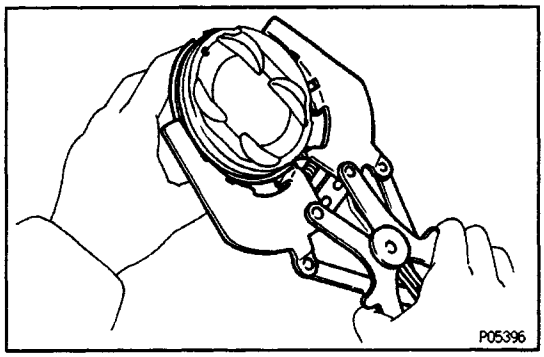

2. REMOVE PISTON RINGS

(a) Using a piston ring expander, remove the two compression rings.

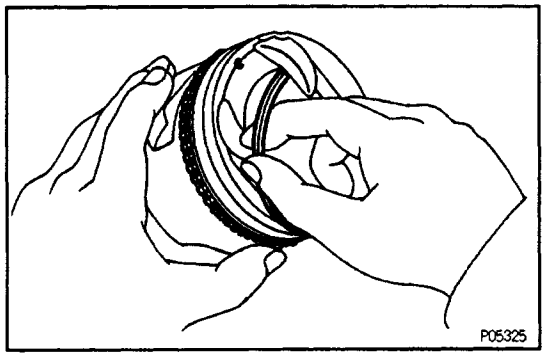

(b) Remove the two side rails and oil ring by hand.

HINT: Arrange the piston rings in correct order only.

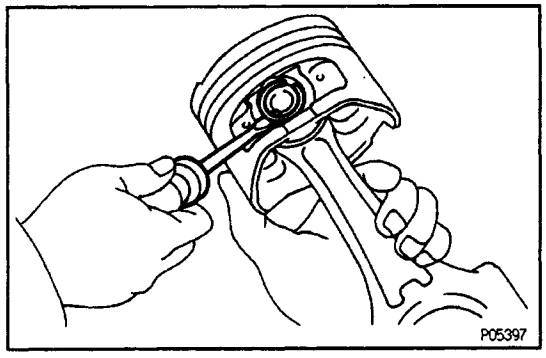

3. DISCONNECT CONNECTING ROD FROM PISTON

(a) Using a small screwdriver, pry out the two snap rings.

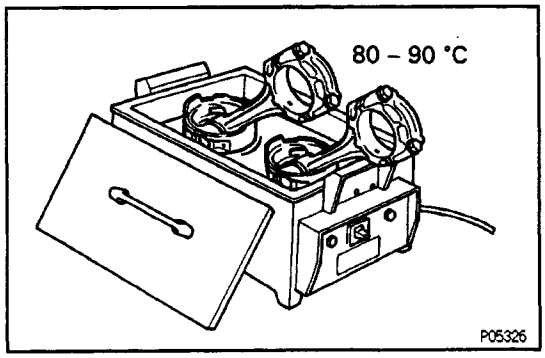

(b) Gradually heat the piston to 80 – 90˚C (176 – 194˚F).

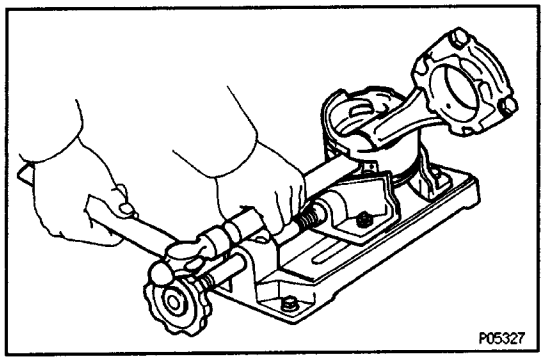

(c) Using plastic–faced hammer and brass bar, lightly tap out the piston pin and remove the connecting rod.

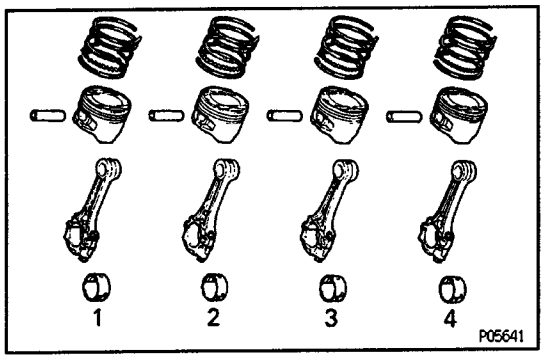

HINT:

- The piston and pin are a matched set.
- Arrange the pistons, pins, rings, connecting rods and bearings in correct order.

EGOWM–01

PISTON AND CONNECTING ROD INSPECTION

1. CLEAN PISTON

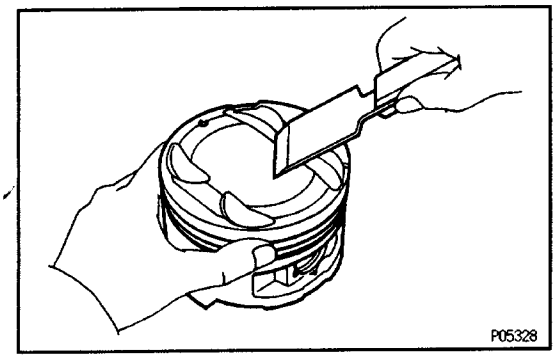

(a) Using a gasket scraper, remove the carbon from the piston top.

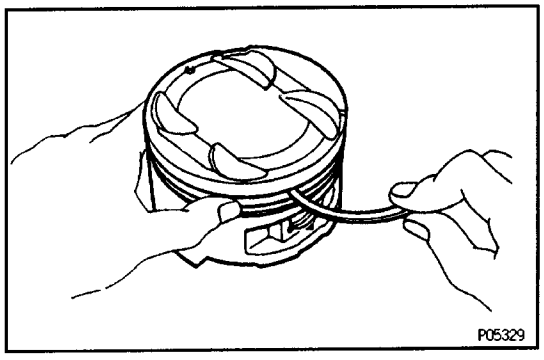

(b) Using a groove cleaning tool or broken ring, clean the piston ring grooves.

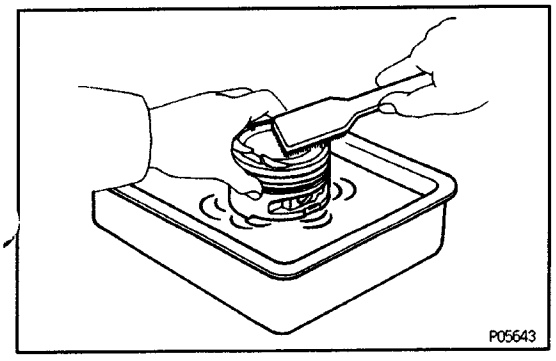

(c) Using solvent and a brush, thoroughly clean the piston.

NOTICE: Do not use a wire brush.

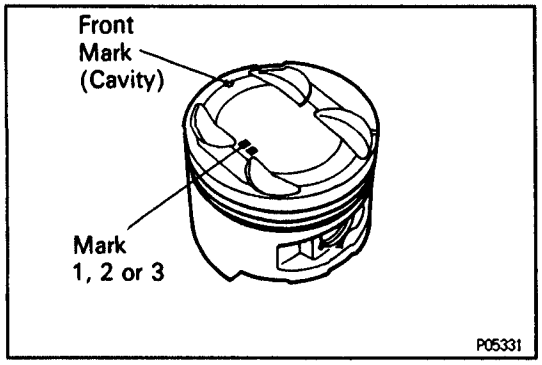

2. INSPECT PISTON

A. Inspect piston oil clearance

HINT: There are three sizes of the standard piston diameter, marked "'1", "2" and "3" accordingly. The mark is stamped on the piston top.

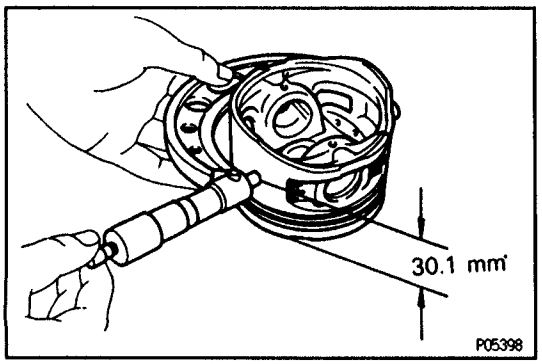

(a) Using a micrometer, measure the piston diameter at ring angles to the piston pin center line, 30.1 mm (1.185 in.) from the piston head.

Piston diameter:

Mark '1"

85.920 – 85.930 mm (3.3827 – 3.3831 in.)

Mark '2"

85.930 – 85.940 mm (3.3831 – 3.3835 in.)

Mark '3'

85.940 – 85.950 mm (3.3835 – 3.3839 in.)

(b) Measure the cylinder bore diameter in the thrust di–rections. (See step 4 in Cylinder Block Inspection)

(c) Subtract the piston diameter measurement from the cylinder bore diameter measurement.

Standard oil clearance:

0.070 – 0.090 mm (0.0028 – 0.0035 in.)

Maximum oil clearance:

0.11 mm (0.0043 in.)

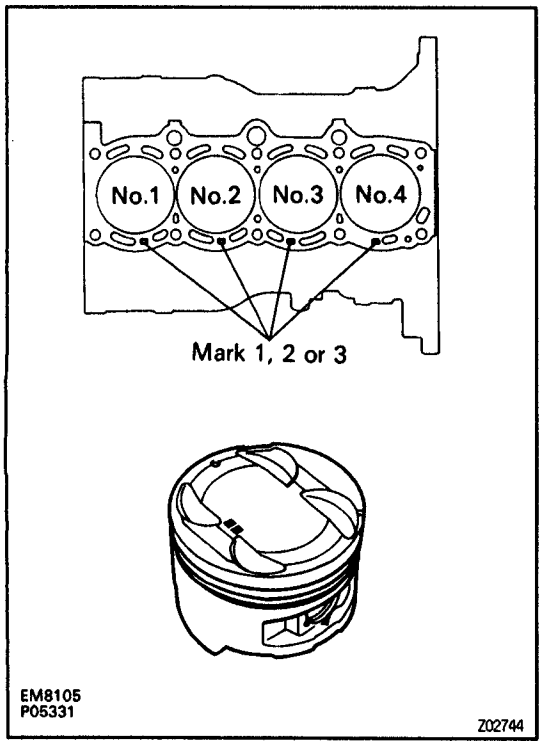

If the oil clearance is greater than maximum, replace all the four pistons and rebore all the four cylinders. If necessary, replace the cylinder block.

HINT (Use new cylinder block): Use a piston with the same number mark as the cylinder bore diameter marked on the cylinder block.

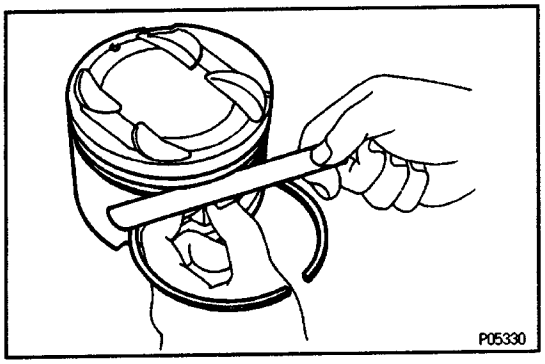

B. Inspect piston ring groove clearance

Using a feeler gauge, measure the clearance between new piston ring and the wall of the piston ring groove.

Ring groove clearance:

No.1

0.040 – 0.080 mm (0.0016 – 0.0031 in.)

No.2

0.030 – 0.070 mm (0.0012 – 0.0028 in.)

If the clearance is greater than maximum, replace the piston.

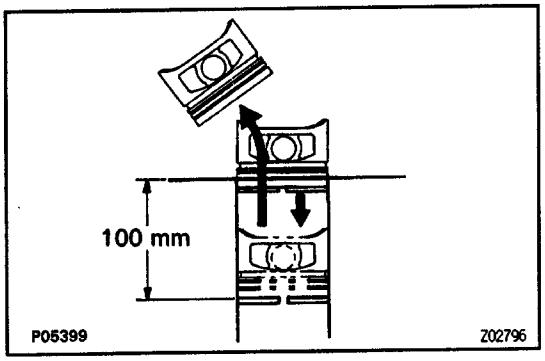

C. Inspect piston ring end gap

(a) Insert the piston ring into the cylinder bore.

(b) Using a piston, push the piston ring a little beyond the bottom of the ring travel, 100 mm (3.94 in.) from the top of the cylinder block.

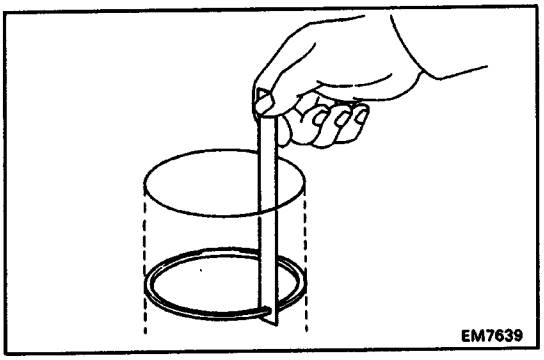

(c) Using a feeler gauge, measure the end gap.

Standard end gap:

No.1

0.330 – 0.550 mm (0.0130 – 0.0217 in.)

N o.2

0.450 – 0.670 mm (0.0177 – 0.0264 in.)

Oil (Side rail)

0.200 – 0.600 mm (0.0079 – 0.0236 in.)

Maximum end gap:

N o.1

0.85 mm (0.0335 in.)

No.2

0.97 mm (0.0382 in.)

Oil (Side rail)

0.90 mm (0.0354 in.)

If the end gap is greater than maximum, replace the piston ring. If the end gap is greater than maximum, even with a new piston ring, rebore all the four cyl–inders or replace the cylinder block.

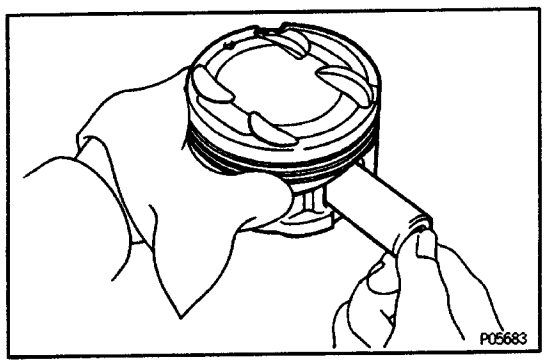

D. Inspect piston pin fit

At 60* C (140˚ F), you should be able to push the piston pin into the piston pin hole with your thumb.

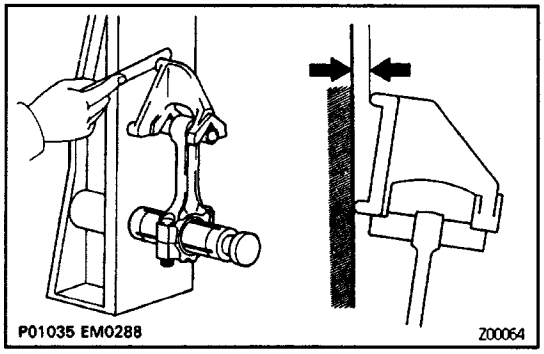

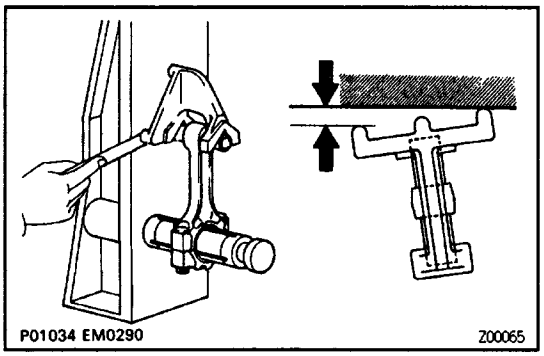

3. INSPECT CONNECTING ROD

A. Inspect connecting rod alignment

Using a rod aligner and thickness gauge, check the connecting rod alignment.

- Check for bend.

Maximum bend:

0.05 mm (0.0020 in.) per 100 mm (3.94 in.)

If bend is greater than maximum, replace the connecting rod assembly.

- Check for twist

Maximum twist:

0.15 mm (0.0059 in.) per 100 mm (3.94 in.)

If twist is greater than maximum, replace the connecting rod assembly.

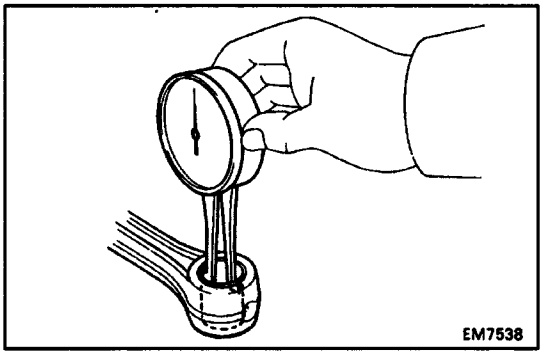

B. Inspect piston pin oil clearance

(a) Using a caliper gauge, measure the inside diameter of the connecting rod bushing.

Bushing inside diameter:

22.005 – 22.017 mm (0.8663 – 0.8668 in.)

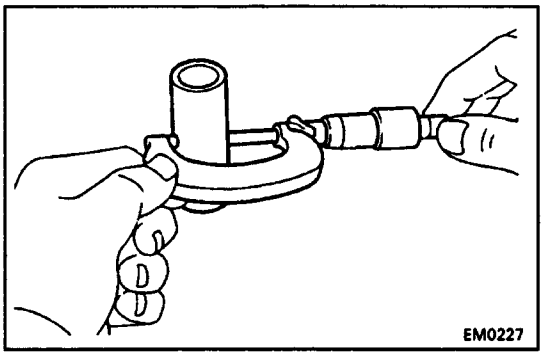

(b) Using a micrometer, measure the piston pin diameter.

Piston pin diameter:

21.997 – 22.009 mm (0.8660 – 0.8665 in.)

(c) Subtract the piston pin diameter measurement from the bushing inside diameter measurement.

Standard oil clearance:

0.005 – 0.011 mm (0.0002 – 0.0004 in.)

Maximum oil clearance:

0.05 mm (0.0020 in.)

If the oil clearance is greater than maximum, replace the bushing. If necessary, replace the piston and piston pin as a set.

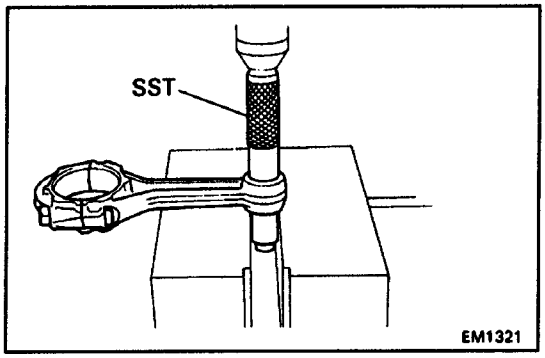

C. If necessary, replace connecting rod bushing

(a) Using SST and a press, press out the bushing.
SST 09222–30010

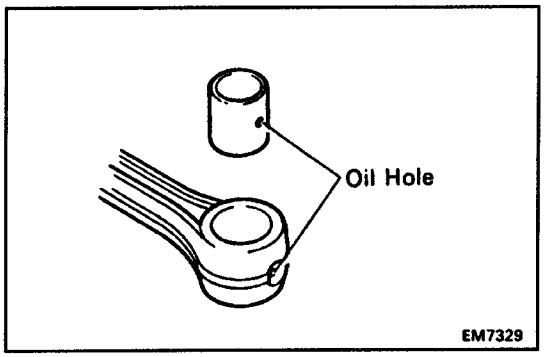

(b) Align the oil holes of a new bushing and the conne–cting rod.

(c) Using SST and a press, press in the bushing.
SST 09222–30010

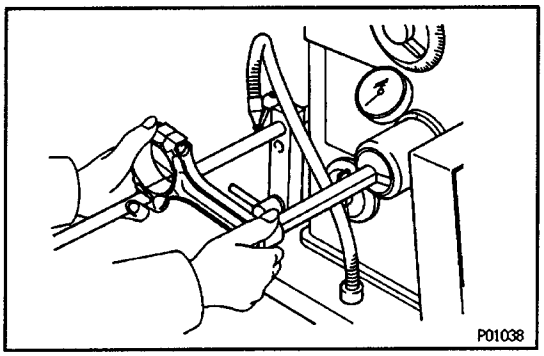

(d) Using a pin hole grinder, hone the bushing to obtain the standard specified clearance (see step B above) between the bushing and piston pin.

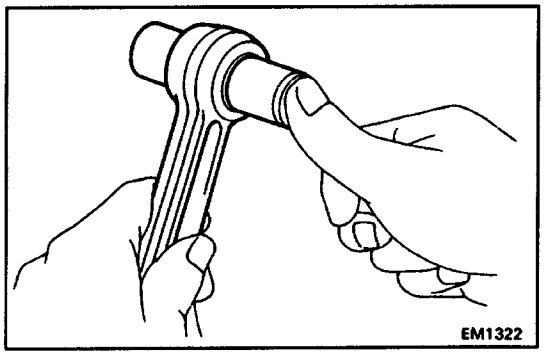

(e) Check the piston pin fit at normal room temperature. Coat the piston pin with engine oil, and push it into the connecting rod with your thumb.

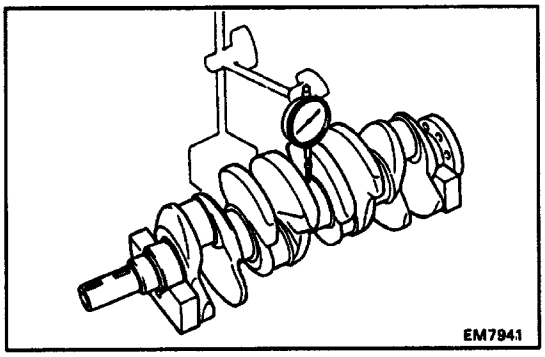

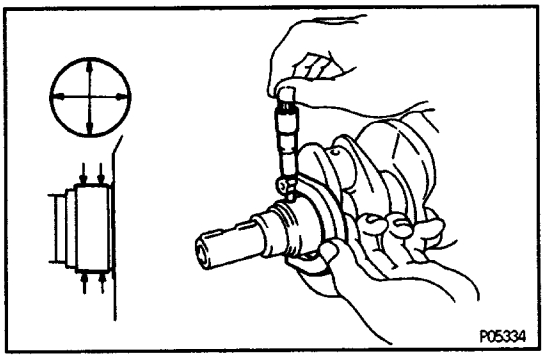

CRANKSHAFT INSPECTION AND REPAIR

1. INSPECT CRANKSHAFT FOR CIRCLE RUNOUT

(a) Place the crankshaft on V–blocks.

(b) Using a dial indicator, measure the circle runout at the canter journal.

Maximum circle runout:
0.06 mm (0.0024 in.)

If the circle runout is greater than maximum, replace the crankshaft.

2. INSPECT MAIN JOURNALS AND CRANK PINS

(a) Using a micrometer, measure the diameter of each main journal and crank pin.

Main journal diameter:
STD size
54.988 – 55.003 mm (2.1653 – 2.1655 in.)
U/S 0.25
54.745 – 54.755 mm (2.1553 – 2.1557 in.)
Crank pin diameter:
STD size
47.985 – 48.000 mm (1.8892 –1.8898 in.)
U/S 0.25
47.745 – 47.755 mm (1.8797 – 1.8801 in.)

If the diameter is not as specified, check the oil cle–arance. (See steps 3 and 6 in Cylinder Block Disas–sembly) If necessary, grind or replace the crankshaft:

(b) Check each main journal and crank pin for taper and out–of–round as shown.

Maximum taper and out–of–round:
0.02 mm (0.0008 in.)

If the taper and out–of–round is greater than maximum, replace the crankshaft.

3. IF NECESSARY, GRIND AND HONE MAIN JOUR–NALS AND/OR CRANK PINS

Grind and hone the main journals and/or crank pins to the fin-ished undersized diameter (See procedure in step 2).

Install new main journal and/or crankshaft pin undersized bear-ings.

CRANKSHAFT OIL SEALS REPLACEMENT

HINT: There are two methods (A and B) to replace the oil seal which are as follows:

1. REPLACE CRANKSHAFT FRONT OIL SEAL

A. If oil pump is removed from cylinder block:

(a) Using a screwdriver and hammer, tap out the oil seal.

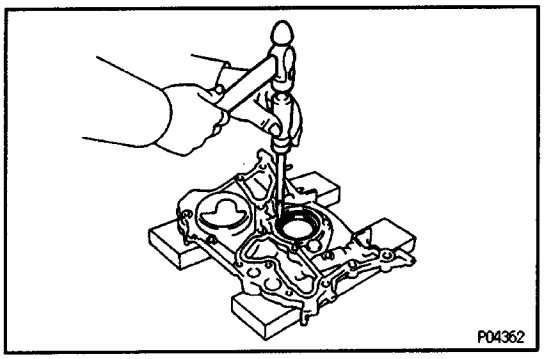

(b) Using SST and a hammer, tap in a new oil seal until its surface is flush with the oil pump case edge.

(c) Apply MP grease to the oil seal lip.

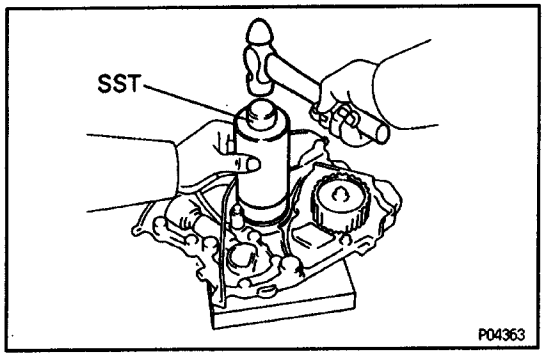

B. If oil pump is installed to the cylinder block:

(a) Using a knife, cut off the oil seal lip.

(b) Using a screwdriver, pry out the oil seal.

NOTICE: Be careful not to damage the crankshaft. Tape the screwdriver tip.

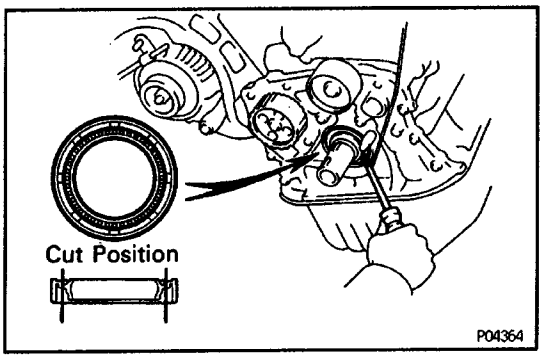

(c) Apply MP grease to a new oil seal lip.

(d) Using SST and a hammer, tap in the oil seal until its surface is flush with the oil pump case edge.
SST 09226–10010

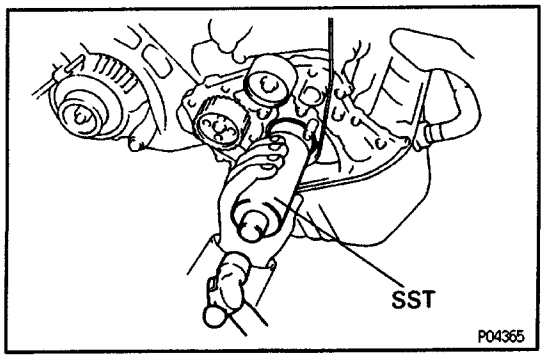

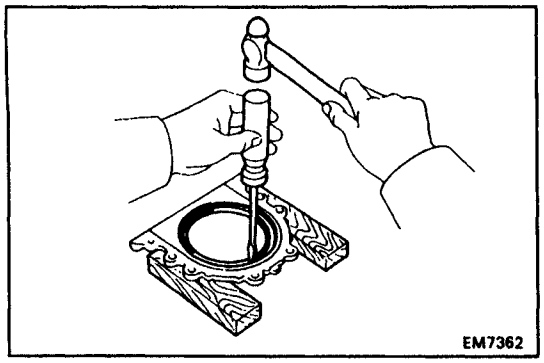

2. REPLACE CRANKSHAFT REAR OIL SEAL

A. If rear oil seal retainer is removed from cylinder block:

(a) Using a screwdriver and hammer, tap out the oil seal.

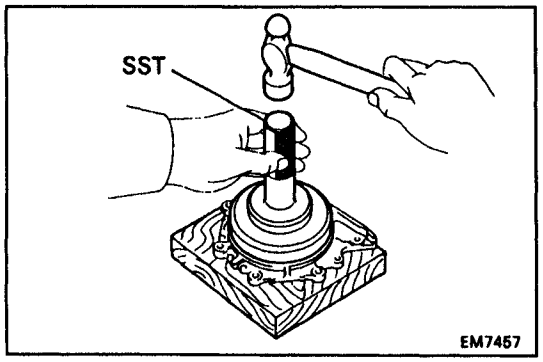

(b) Using SST and a hammer, tap in a new oil seal until its surface is flush with the rear oil seal edge.
SST 09223–63010

(c) Apply MP grease to the oil seal lip.

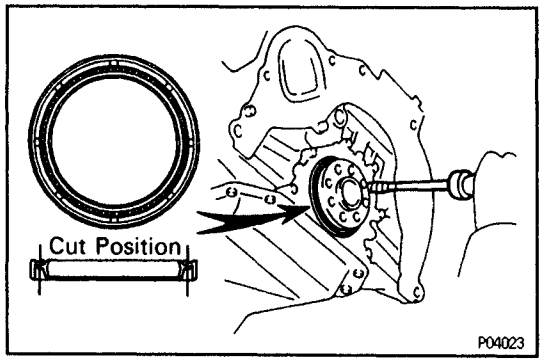

B. If rear oil seal retainer is installed to cylinder block:

(a) Using a knife, cut off the oil seal lip.

(b) Using a screwdriver, pry out the oil seal.

NOTICE: Be careful not to damage the crankshaft. Tape the screwdriver tip.

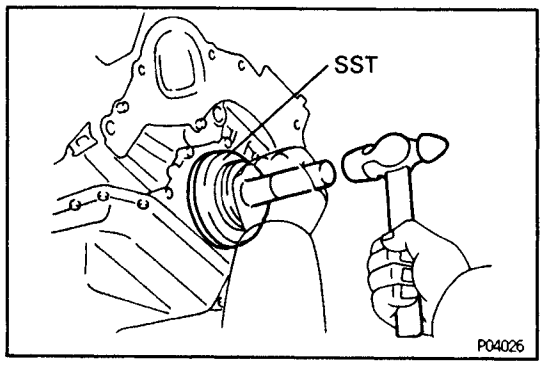

(c) Apply MP grease to a new oil seal lip.

(d) Using SST and a hammer, tap in the oil seal until its surface is flush with the rear oil seal retainer edge.
SST 09223–63010

EGOC1–03

PISTON AND CONNECTING ROD ASSEMBLY

1. ASSEMBLE PISTON AND CONNECTING ROD

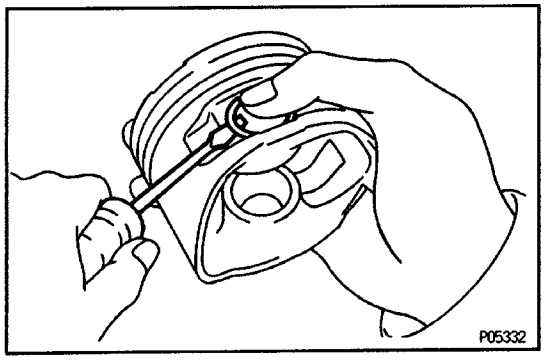

(a) Using a small screwdriver, Install a new snap ring on one side of the piston pin hole.

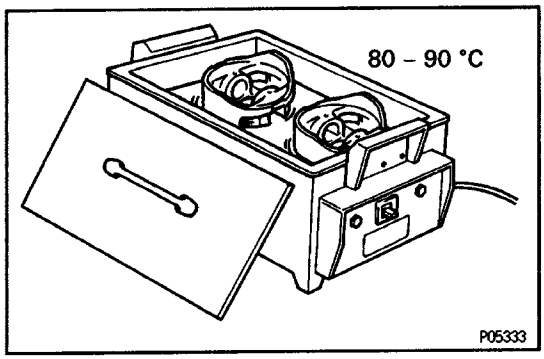

(b) Gradually heat the piston to 80 – 90˚C (176 – 194˚ F).

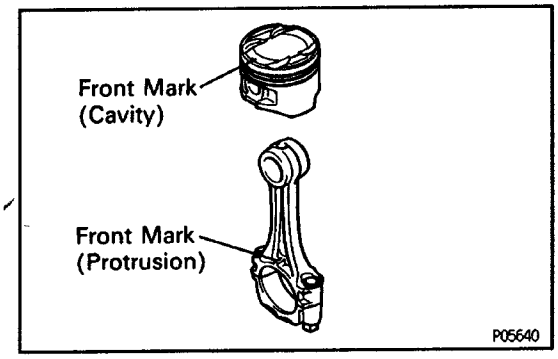

(c) Coat the piston pin with engine oil.
(d) Align the front marks of the piston and connecting rod, and push in the piston pin with your thumb.

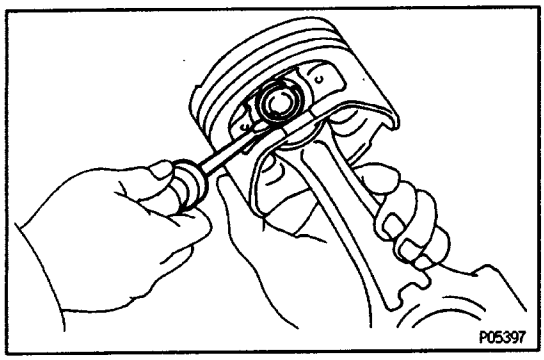

(e) Using a small screwdriver, Install a new snap ring on the other side of the piston pin hole.

2. INSTALL PISTON RINGS

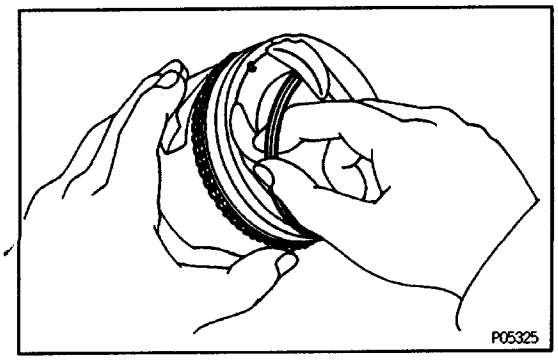

(a) Install the oil ring expander and two side rails by hand.

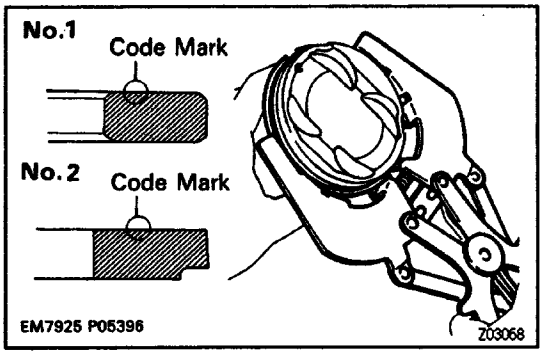

(b) Using a piston ring expander, install the two com–pression rings with the code mark facing upward.
Code mark:
R

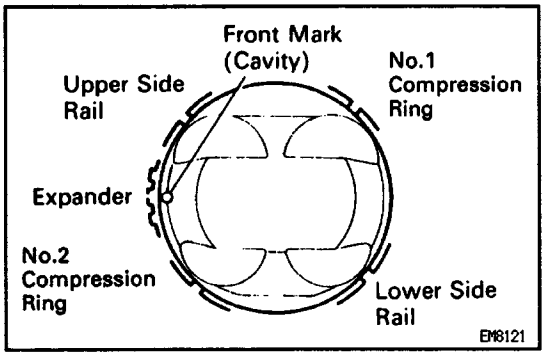

(c) Position the piston rings so that the ring ends are as shown.
NOTICE: Do not align the piston ring ends.

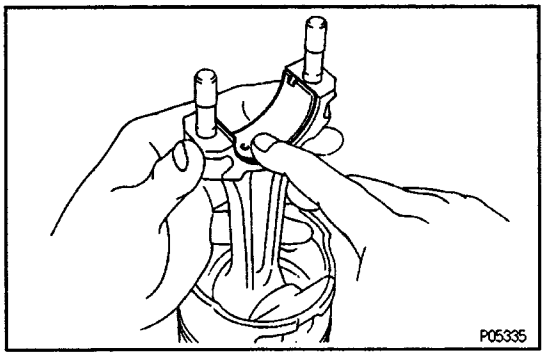

3. INSTALL BEARINGS
(a) Align the bearing claw with the groove of the con–necting rod or connecting cap.
(b) Install the bearings in the connecting rod and conne–cting rod cap.

EGOWN–01

CYLINDER BLOCK ASSEMBLY

(See Components for Cylinder Block Disassembly and Assembly)
HINT:

- Thoroughly clean all parts to be assembled.
- Before installing the parts, apply new engine oil to all sliding and rotating surfaces.
- Replace all gaskets, 0–rings and oil seals with new parts.

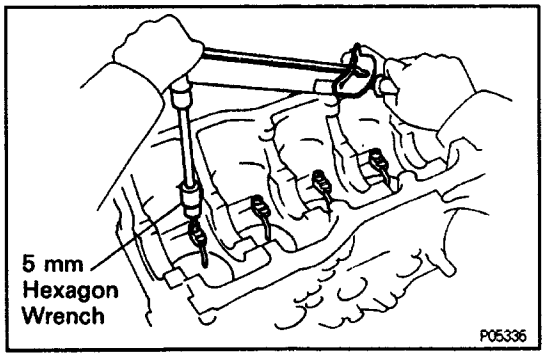

1. INSTALL OIL NOZZLES
Using a 5 mm hexagon wrench, install the oil nozzle with the bolt. Install the four oil nozzles.
Torque: 9.1 N–m (93 kgf–cm, 81 in.–lbf)

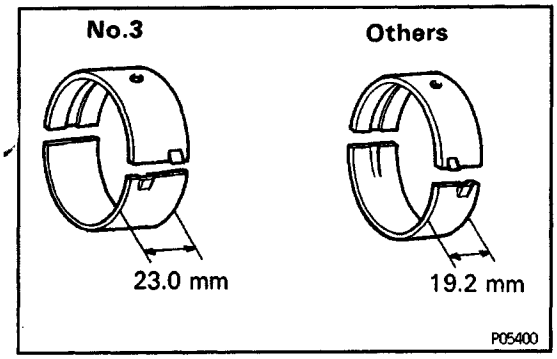

2. INSTALL MAIN BEARINGS

HINT:

- Main bearings come in widths of 19.2 mm (0.756 in.) and 23.0 mm (0.906 in.). Install the 23.0 mm (0.906 in.) bearings in the No.3 cylinder block journal position with the main bearing cap. Install the 19.2 mm (0.756 in.) bearings in the other positions.
- Upper bearings have an oil groove and oil holes; lower bearings do not.

(a) Align the bearing claw with the claw groove of the cylinder block, and push in the five upper bearings.

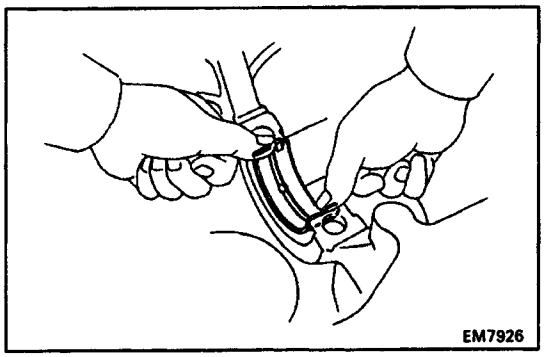

(b) Align the bearing claw with the claw groove of the main bearing cap, and push in the five lower bearings.
HINT: A number is marked on each main bearing cap to indicate the installation position.

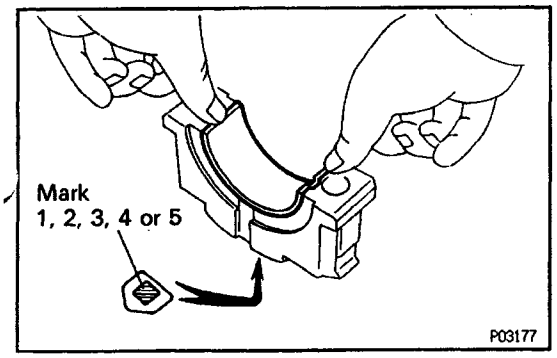

3. INSTALL UPPER THRUST WASHERS

Install the two thrust washers under the No.3 journal position of the cylinder block with the oil grooves facing outward.

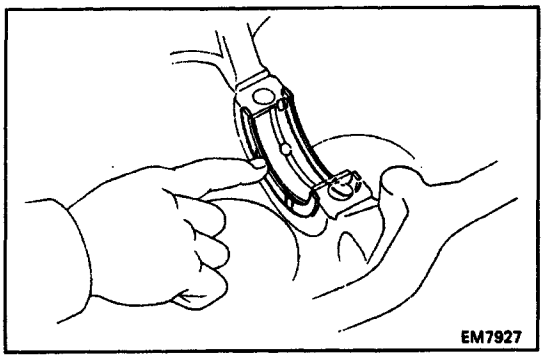

4. PLACE CRANKSHAFT ON CYLINDER BLOCK

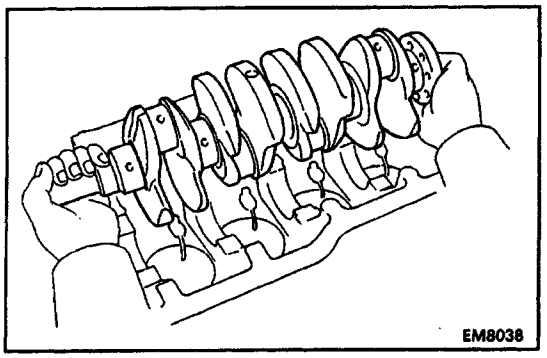

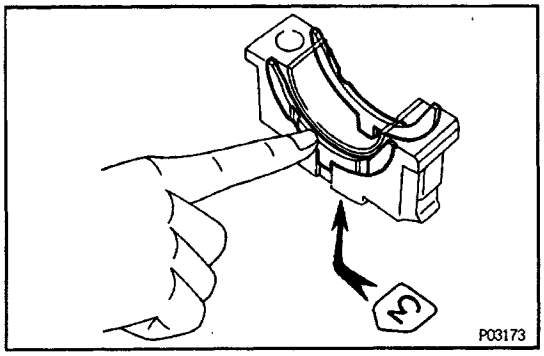

5. INSTALL MAIN BEARING CAPS AND LOWER THRUST WASHERS

(a) install the two thrust washers on the No.3 bearing cap with the grooves facing outward.

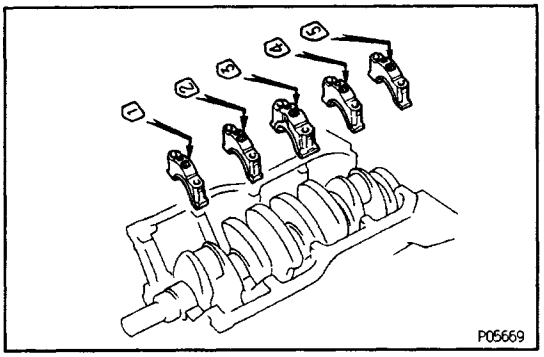

(b) Install the five main bearing caps in their proper locations.
HINT: Each bearing cap has a number and front mark.

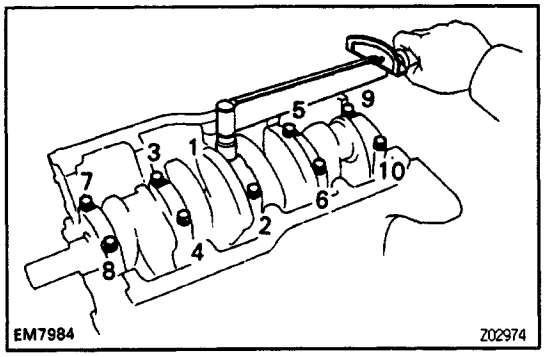

(c) Apply a light coat of engine oil on the threads and under the heads of the main bearing cap bolts.
(d) Install and uniformly tighten the ten bolts of the main bearing cap bolts in several passes, in the sequence shown.
Torque: 59 N–m (600 kgf–cm, 43 ft–lbf)
(e) Check that the crankshaft turns smoothly.

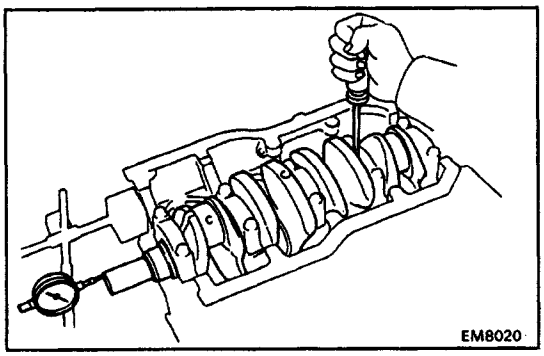

(f) Check the crankshaft thrust clearance.
- Using a dial indicator, measure the thrust clearance while prying the crankshaft back an forth with a screwdriver.

Standard thrust clearance:
0.020 – 0.220 mm (0.0008 – 0.0087 in.)
Maximum thrust clearance:
0.30 mm (0.0118 in.)
If the thrust clearance is greater than maximum, replace the thrust washers as a set.

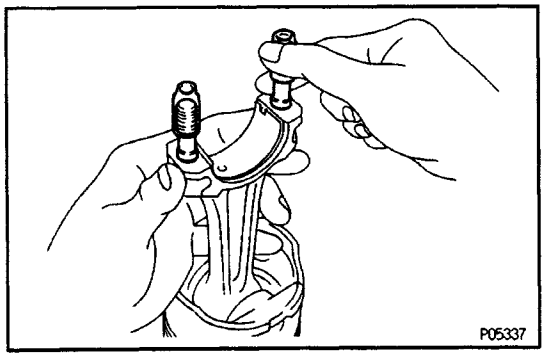

6. INSTALL PISTON AND CONNECTING ROD ASSEMBLES

(a) Cover the connecting rod bolts with a short piece of hose to protect the crankshaft from damage.

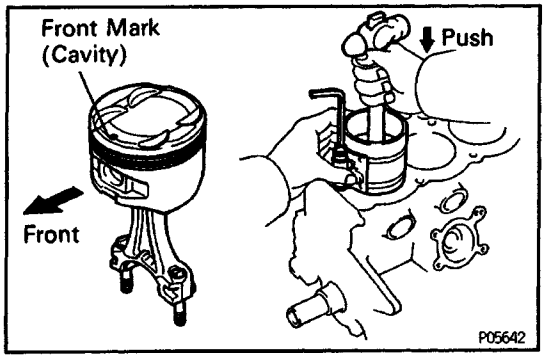

(b) Using a piston ring compressor, push the correctly numbered piston and connecting rod assemblies into each cylinder with the front mark of the piston facing forward.

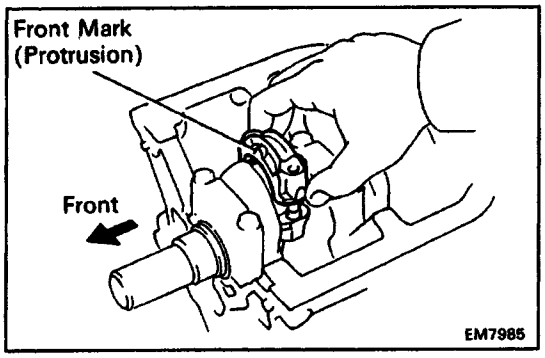

7. INSTALL CONNECTING ROD CAPS

(a) Match the numbered connecting rod cap with the connecting rod.

(b) Install the connecting rod cap with the front mark facing forward.

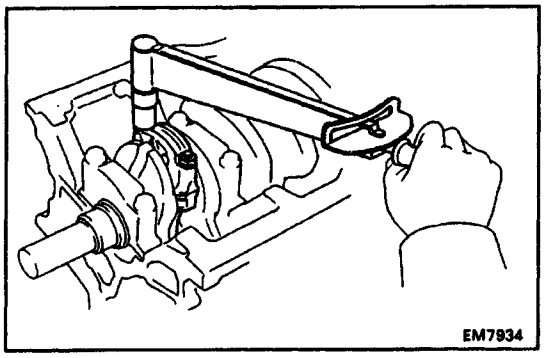

(c) Apply a light of engine oil on the threads and under the nuts of the connecting rod cap.

(d) Install and alternately tighten the cap nuts in several passes.

Torque: 67 N–m (680 kgf–cm, 49 ft–lbf)

(e) Check that the crankshaft turns smoothly.

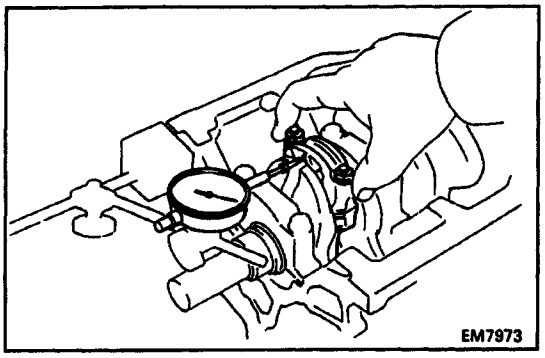

(f) Check the connecting rod thrust clearance.

- Using a dial indicator, measure the thrust clearance while moving the connecting rod back an forth.

Standard thrust clearance:

0.160 – 0.312 mm (0.0063 – 0.0123 in.)

Maximum thrust clearance:

0.35 mm (0.0138 in.)

If the thrust clearance is greater than maximum, replace the connecting rod assembly. If necessary, replace the crankshaft.

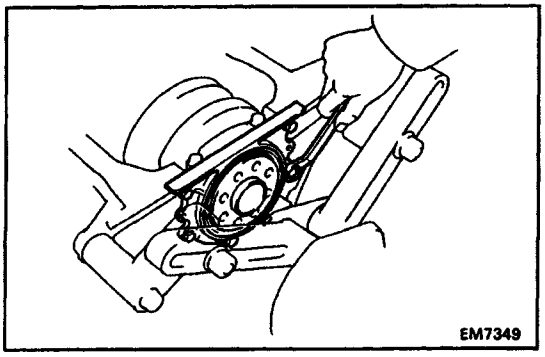

8. INSTALL REAR OIL SEAL RETAINER

Install a new gasket and the retainer with the six bolts.

Torque: 9.3 N–m (95 kgf–cm, 82 in.–lbf)

EG0WU–01

POST ASSEMBLY

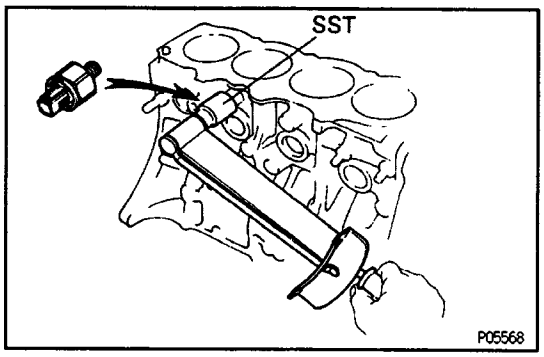

1. INSTALL KNOCK SENSOR

Using SST, install the knock sensor.

SST 09816–30010

Torque: 37 N–m (380 kgf–cm, 27 ft–lbf)

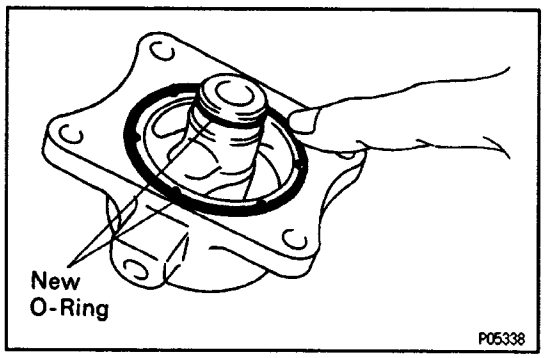

2. INSTALL OIL COOLER BRACKET

(a) Install two new 0–rings to the oil cooler bracket.

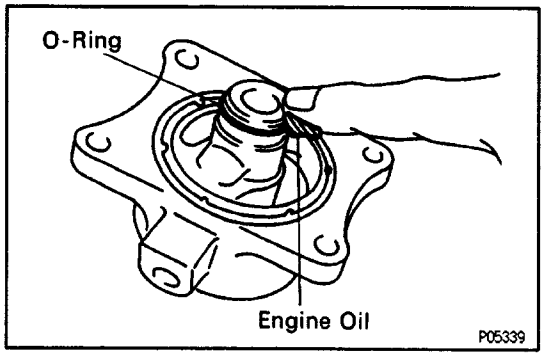

(b) Apply a light coat of engine oil on the small O–ring.

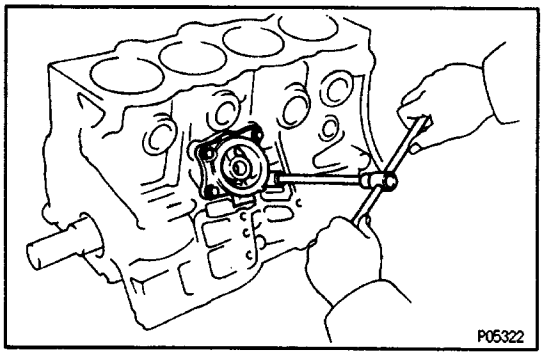

(c) Install the oil cooler bracket with the four bolts.

Torque: 7.8 N–m (80 kgf–cm, 69 in.–lbf)

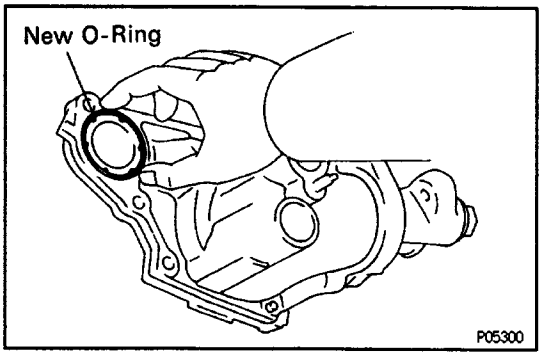

3. INSTALL WATER PUMP AND WATER PUMP COVER ASSEMBLY

(a) Install a new 0–ring to the water pump cover.

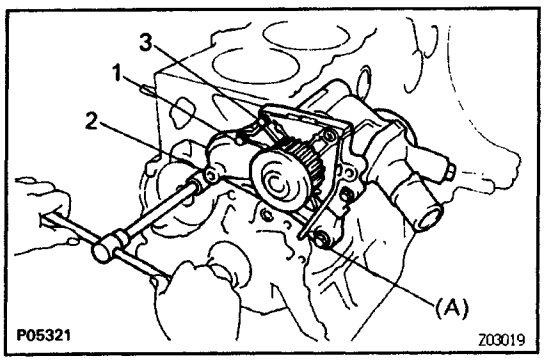

(b) Install the water pump with the three bolts. Tighten the bolts in the sequence shown.
Torque: 7.8 N–m (80 kgf–cm, 69 in.–lbf)
(c) (w/o A/C)
Install the bolt (A).
Torque: 27 N–m (275 kgf–cm, 20 ft–lbf)

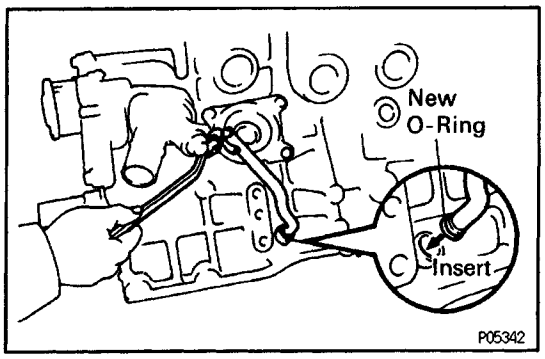

4. INSTALL OIL DIPSTICK GUIDE
(a) Install a new O–ring to the dipstick guide.
(b) Apply soapy water to the 0–ring.
(c) Insert the dipstick guide into the guide hole of the cylinder block.
(d) Install the dipstick guide with the bolt.

5. INSTALL OIL PUMP AND AND OIL PAN
(See Oil Pump Installation)
6. INSTALL CYLINDER HEAD
(See Cylinder Head Installation)
7. INSTALL TIMING BELT AND PULLEYS
(See Timing Belt Installation)

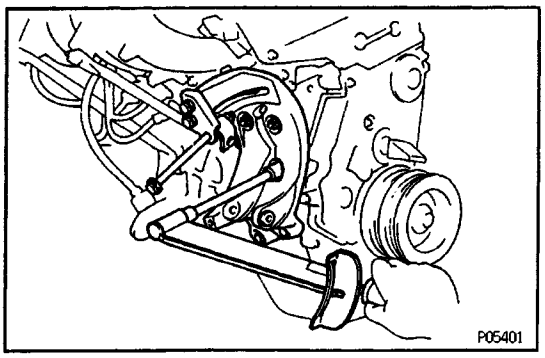

8. INSTALL ALTERNATOR BRACKET
Install the alternator bracket with the three bolts and two nuts.
Torque: 43 N–m (440 kgf–cm, 32 ft–lbf)

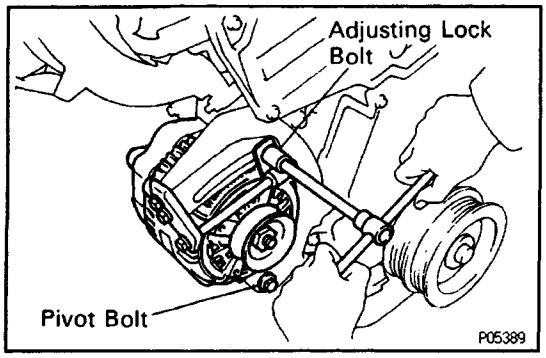

9. INSTALL ALTERNATOR
(a) Mount the alternator on the alternator bracke with the pivot bolt and adjusting lock bolt. Do not tighten the bolts yet.

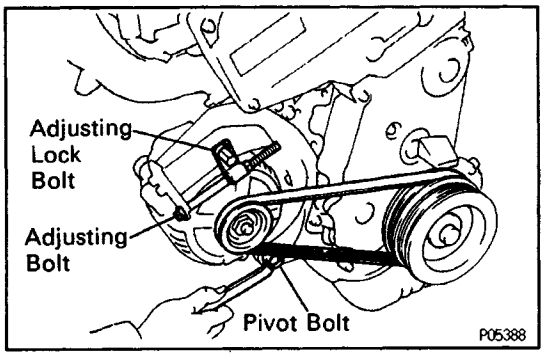

(b) Install the drive belt with the adjusting bolt.
(c) Adjust the drive belt with the adjusting bolt.

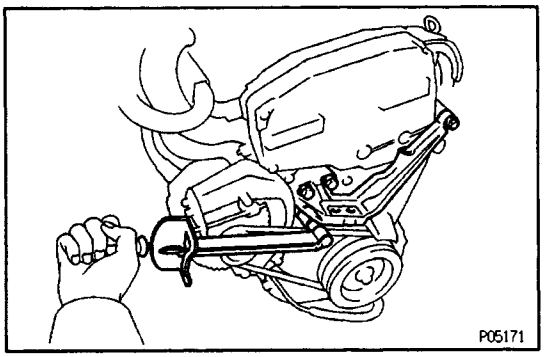

10. INSTALL RH ENGINE MOUNTING BRACKET

Install the mounting bracket with the four– bolts.
Torque: 61 N–m (620 kgf–cm, 45 ft–lbf)

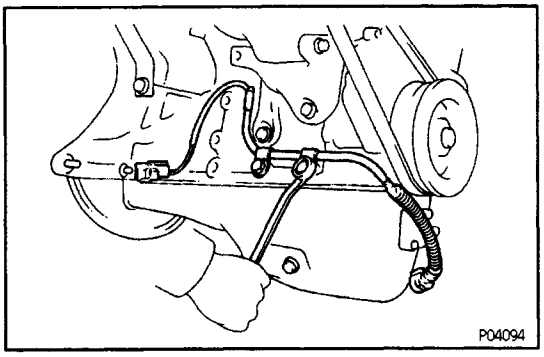

11. INSTALL OIL LEVEL SENSOR WIRE

(a) Install the sensor wire with the two bolts.

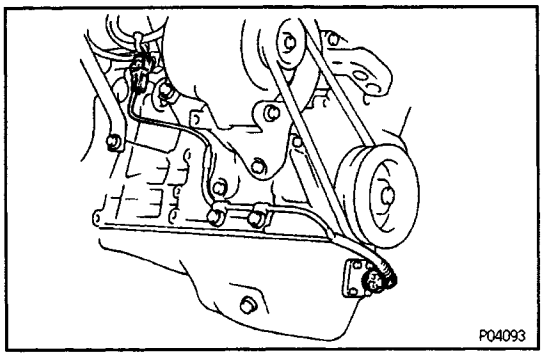

(b) Connect the two connectors.

12. DISCONNECT ENGINE FROM ENGINE STAND

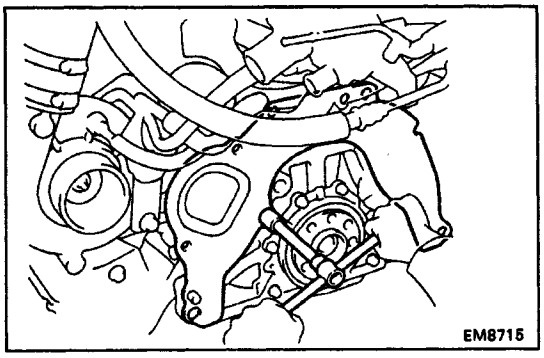

13. INSTALL REAR END PLATE

Install the rear end plate with the bolt.
Torque: 9.3 N–m (95 kgf–cm, 82 in.–lbf)

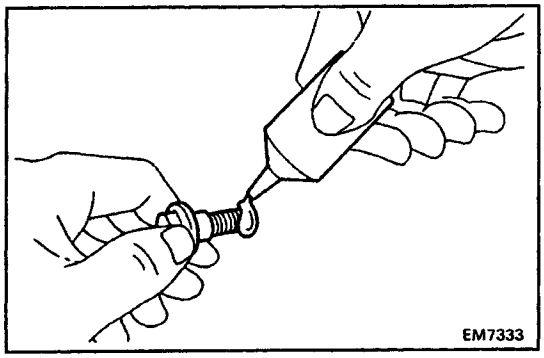

14. INSTALL FLYWHEEL

(a) Apply adhesive to two or three threads of the mou–nting bolt end.

Adhesive:

Part No. 08833–00070, THREE BOND 1324 or equivalent

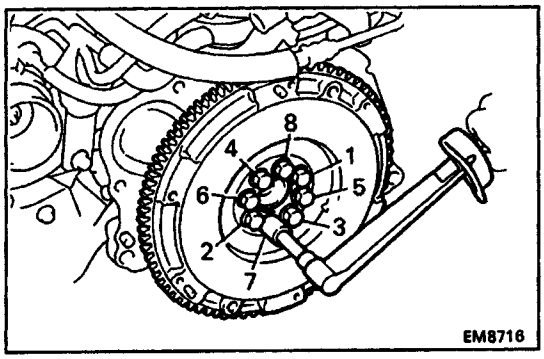

(b) Install the flywheel on the crankshaft.

(c) Install and uniformly tighten the mounting bolts in several passes, in the sequence shown.

Torque: 108 N–m (1,100 kgf–cm, 80 ft–lbf)

ENGINE AND TRANSAXLE ASSEMBLY

(See Components for Engine & Transaxle Separation and Assembly)

1. INSTALL CLUTCH DISC AND COVER

Using SST, install the disc and cover with the six bolts. Uniformly tighten the bolts in several passes.

SST 09301–17010

Torque: 19 N–m (195 kgf–cm, 14 ft–lbf)

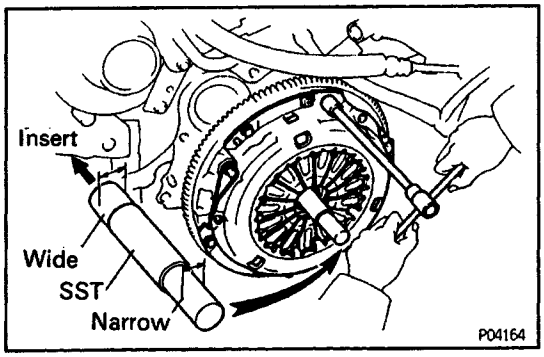

2. INSTALL TRANSAXLE TO ENGINE

(a) Attach the transaxle to the engine.

(b) Install the five bolts together with the following parts:

(1) Ground strap

(2) Engine wire bracket

Torque:

46 N–m (470 kgf–cm, 34 ft–lbf) for 14 mm head

64 N–m (650 kgf–cm, 47 ft–lbf) for 17 mm head

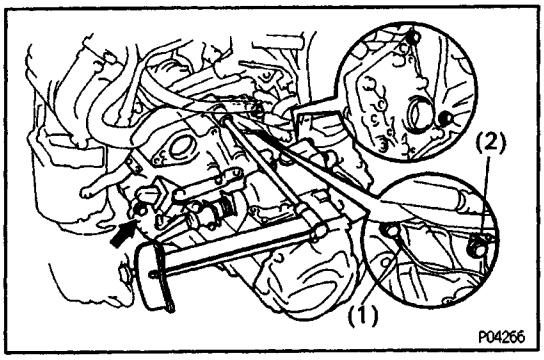

3. INSTALL HEATER WATER PIPE

(a) Install the water pipe with the two bolts.

(b) Connect the water hose to the water by–pass pipe.

Torque: 46 N–m (470 kgf–cm, 34 ft–lbf)

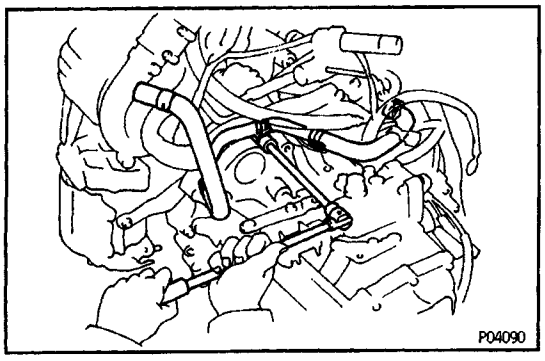

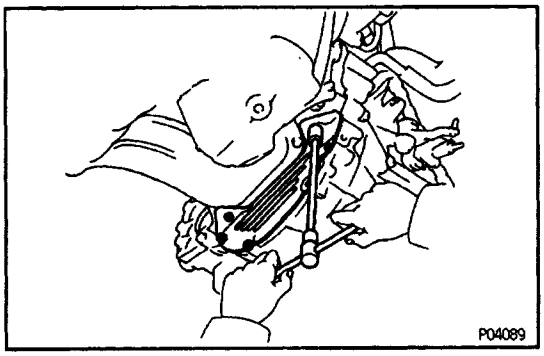

4. INSTALL N4.2 REAR END PLATE

Install the rear end plate with the four bolts.

Torque:

9.3 N–m (95 kgf–cm, 82 In.–lbf) for 10 mm head

19 N–m (195 kgf–cm, 14 ft–lbf) for 12 mm head

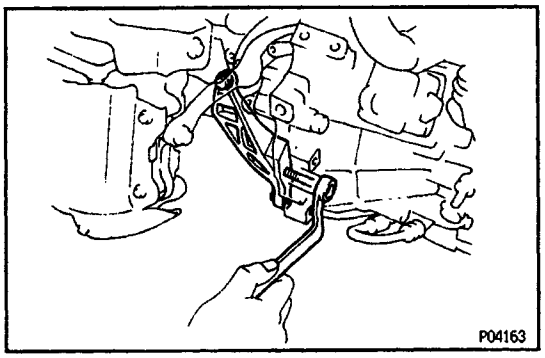

5. INSTALL STIFFENER PLATE

Install the stiffener plate with the three bolts.

Torque: 37 N–m (380 kgf–cm, 27 ft–lbf)

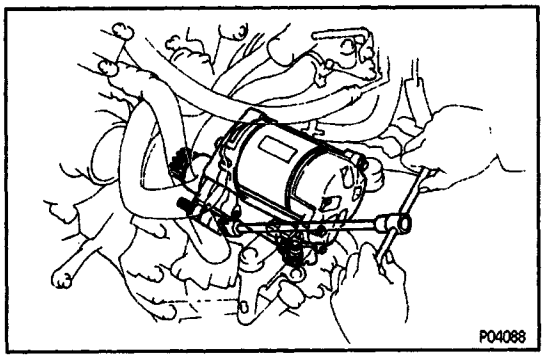

6. INSTALL STARTER

Install the stater with the two bolts.

Torque: 39 N–m (400 kgf–cm, 29 ft–lbf)

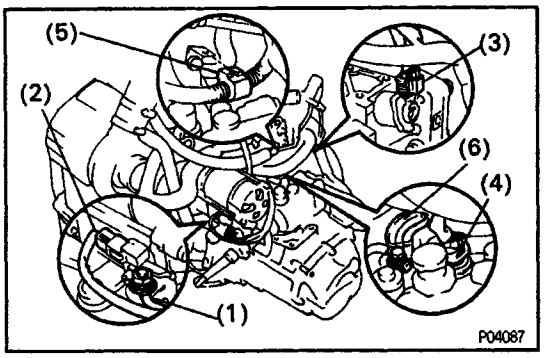

7. CONNECT ENGINE WIRE

(a) Connect the following parts:

(1) Starter wire
(2) Starter connector
(3) Vehicle speed pulse generator connector
(4) Back–up light switch connector
(5) Engine wire clamp
(6) Engine wire bracket

(b) Install the terminal cover to the starter.

ENGINE INSTALLATION

EG0WV–01

(See Components for Engine Removal and Installation)

1. INSTALL DRIVE SHAFT BEARING BRACKET

(a) Install the bearing bracket with the two bolts.

Torque: 64 N–m (650 kgf–cm, 47 ft–lbf)

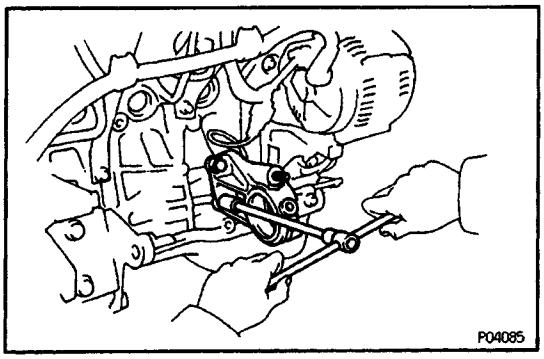

(b) Install the bearing bracket stay with the two bolts and nut.

Torque: 75 N–m (770 kgf–cm, 56 ft–lbf)

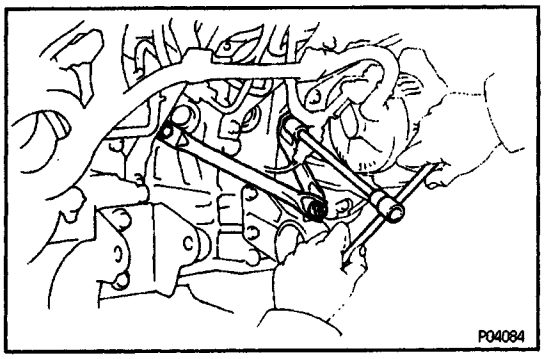

2. INSTALL LH ENGINE MOUNTING BRACKET

Install the mounting bracket with the three bolts.

Torque: 52 N–m (530 kgf–cm, 38 ft–lbf)

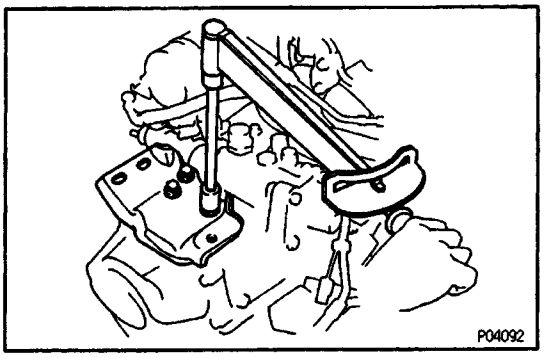

3. INSTALL REAR ENGINE MOUNTING BRACKET

Install the mounting bracket with the six bolts.

Torque:

39 N–m (400 kgf–cm, 29 ft–lbf) for RH side

77 N–m (790 kgf–cm, 57 ft–lbf) for rear side

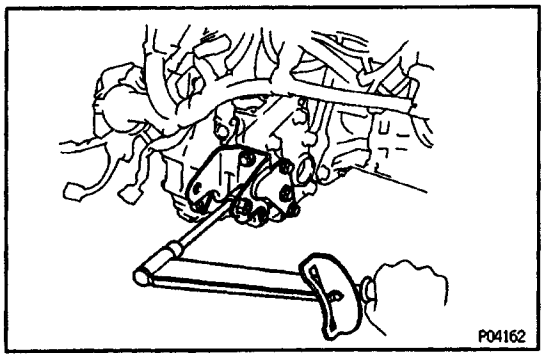

4. INSTALL ENGINE AND TRANSAXLE ASSEMBLY IN VEHICLE

(a) Attach the engine chain hoist to the engine hangers.

(b) Slowly lower the vehicle, and raise the engine.

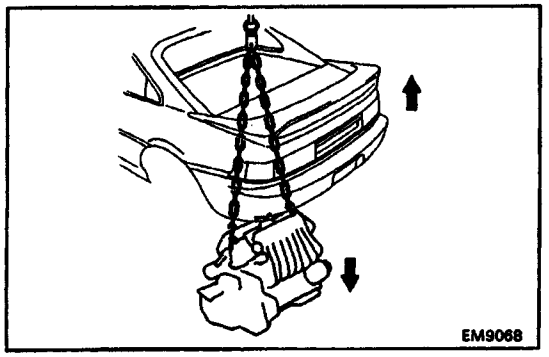

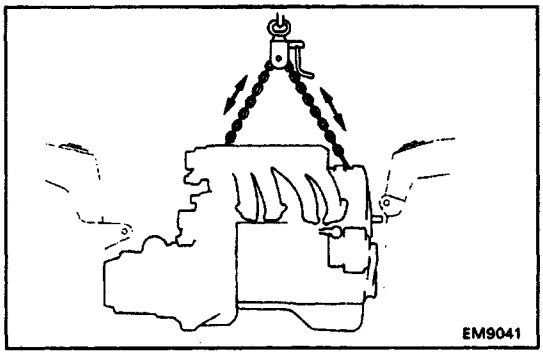

(c) Keep the engine level, and align RH and LH mounting with the body mountings.

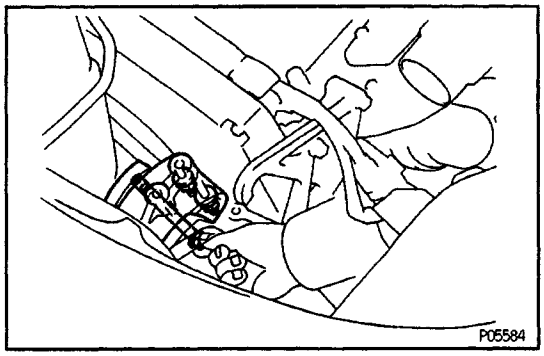

(d) Attach the RH mounting insulator to the body, and temporarily install the through bolt.
(e) Attach the RH mounting insulator to the mounting bracket, and temporarily install the two nuts.

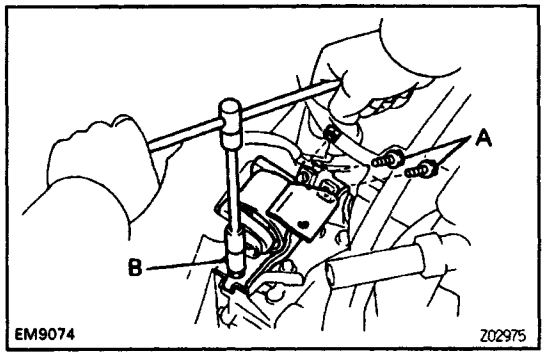

(f) Attach the LH mounting insulator to the body, and temporarily install the through bolt.
(g) Attach the LH mounting insulator to the mounting bracket, and install the three bolts.
Torque:
63 N–m (650 kgf–cm. 47 ft–lbf) for A
73 N–m (740 kgf–cm, 54 ft–lbf) for B

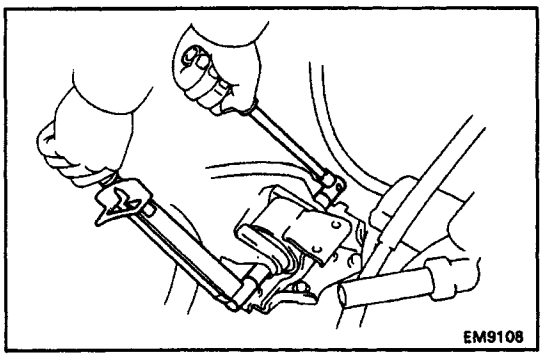

(h) Tighten the through bolt holding the LH mounting insulator to the body.
Torque: 78 N–m (800 kgf–cm, 58 ft–lbf)

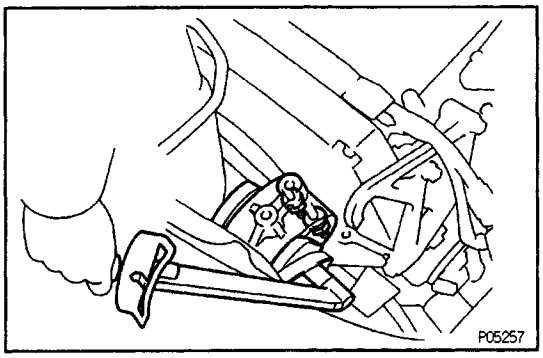

(i) Tighten the two nuts holding the RH mounting insu–lator to the mounting bracket.
Torque: 52 N–m (530 kgf–cm, 38 ft–lbf)
(j) Tighten the through bolt holding the RH mounting insulator to the body.
Torque: 78 N–m (800 kgf–cm, 58 ft–lbf)
(k) Disconnect the engine sling device from the engine.

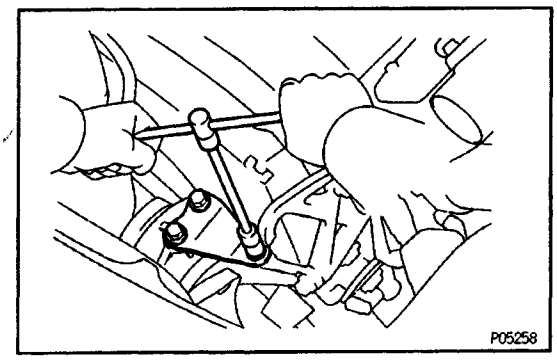

5. INSTALL RH ENGINE MOUNTING STAY

Install the mounting stay with the three bolts.

Torque: 73 N–m (740 kgf–cm, 54 ft–lbf)

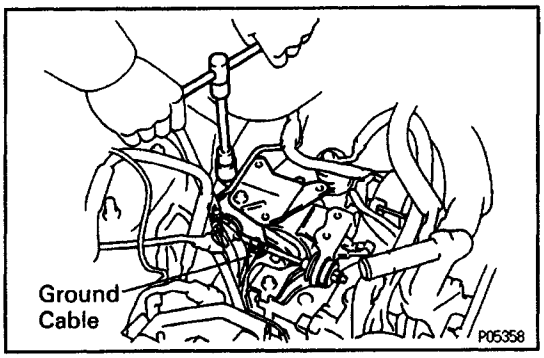

6. INSTALL LATERAL CONTROL ROD TO BODY

Install the control rod and charcoal canister tube with the four bolts. Connect the ground cable.

Torque: 35 N–m (360 kgf–cm, 26 ft–lbf)

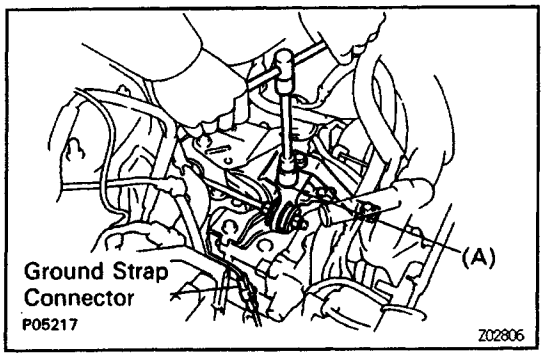

7. INSTALL LATERAL CONTROL ROD (TO LH ENGINE MOUNTING INSULATOR)AND LH ENGINE MOUNTING STAY

(a) Temporarily install the lateral control rod with the bolt (A).

(b) Install the LH mounting stay with the two bolts.

Torque:

25 N–m (250 kgf–cm, 18 ft–lbf) for transaxle side

73 N–m (740 kgf–cm, 54 ft–lbf) for insulator side

(c) Tighten the bolt (A).

Torque: 37 N–m (380 kgf–cm, 27 ft–lbf)

8. CONNECT GROUND STRAP CONNECTOR

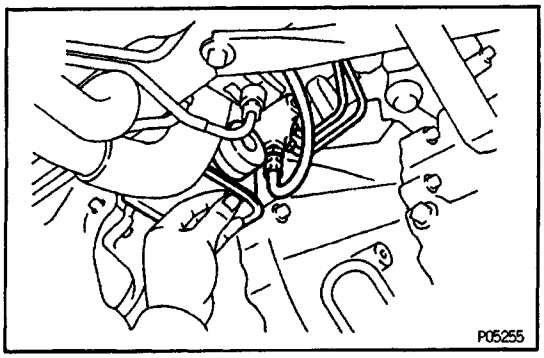

9. INSTALL FRONT ENGINE MOUNTING BRACKET

(a) Temporarily install the clutch release cylinder and mounting bracket with the two bolts.

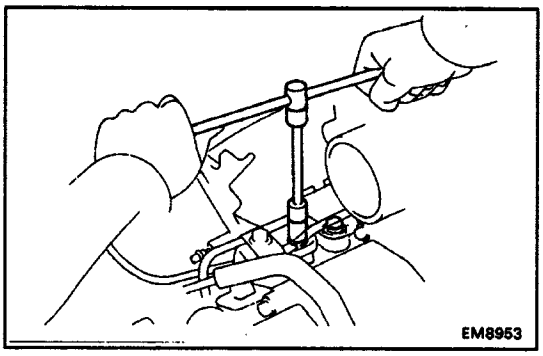

(b) Tighten the two bolts holding the clutch release cyl–inder to the transaxle.
Torque: 12 N–m (120 kgf–cm, 9 ft–lbf)

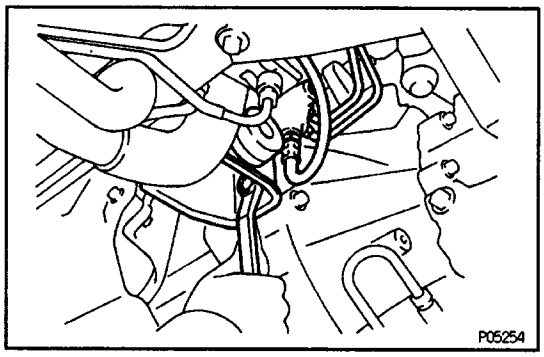

(c) Tighten the two bolts holding the mounting bracket to to the transaxle.
Torque: 77 N–m (790 kgf–cm, 57 ft–lbf)

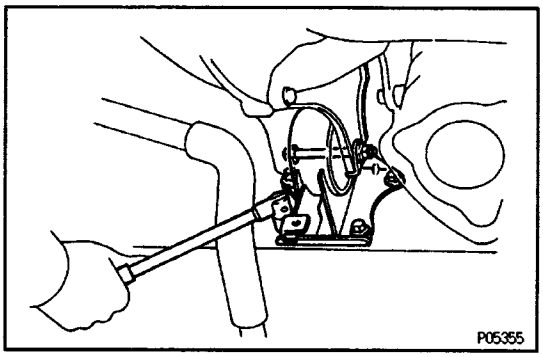

10. INSTALL FRONT ENGINE MOUNTING INSULATOR
(a) Install the mounting insulator to the body with the four bolts.
Torque: 73 N–m (740 kgf–cm, 54 ft–lbf)
(b) Temporarily install the through bolt and nut holding the mounting insulator to the mounting bracket.

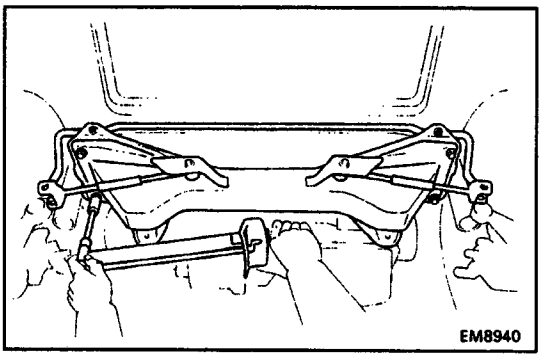

11. INSTALL REAR SUSPENSION LOWER CROSSMEMBER
(a) Install the lower crossmember with the four bolts.
Torque: 113 N–m (1,150 kgf–cm, 83 ft–lbf)

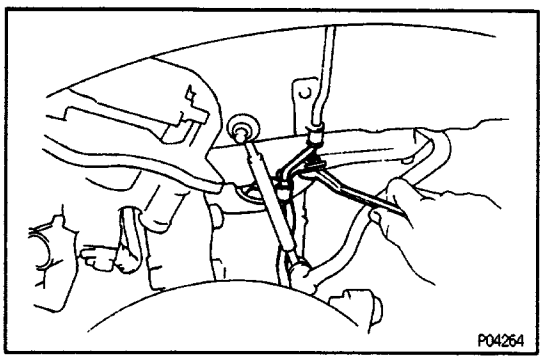

(b) Install the wire clamp of the speed sensor to the lower crossmember with the bolt. Install the two wire clamps.
(c) Install the lower suspension arm.
(See Lower Suspension Arm Installation in SA section)



12. INSTALL DRIVE SHAFTS
(See Drive Shaft Installation in SA section)

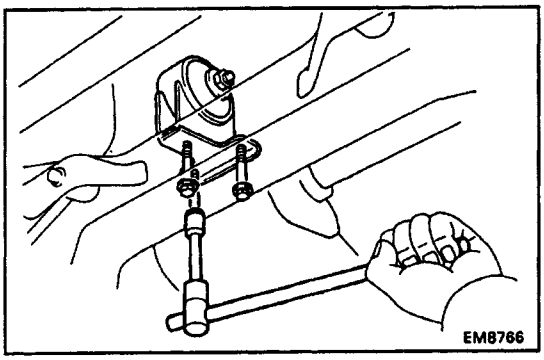

13. INSTALL REAR ENGINE MOUNTING INSULATOR
(a) Temporarily install the mounting bracket to the body with the three bolts.
(b) Temporarily install the through bolt holding the mou–nting insulator to the mounting bracket.
(c) Tighten the three bolts holding the mounting bracket to the lower crossmember.
Torque: 64 N–m (650 kgf–cm, 47 ft–lbf)

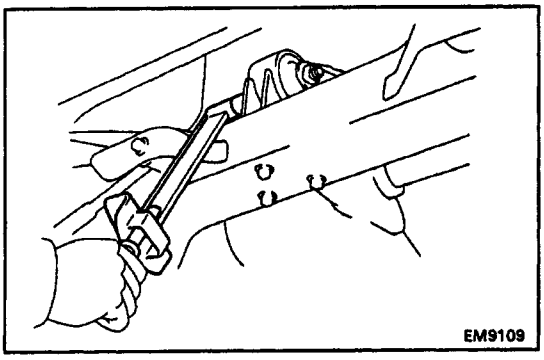

(d) Tighten the through bolt holding the mounting insu–lator to the mounting bracket.
Torque: 87 N–m (890 kgf–cm, 64 ft–lbf)

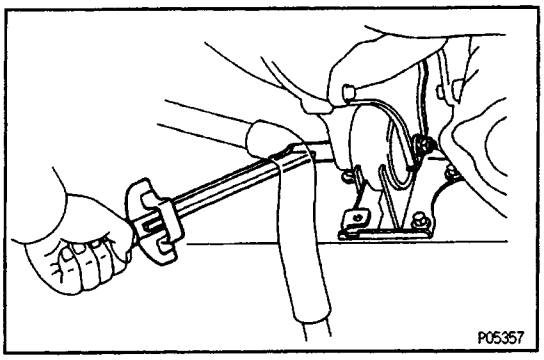

14 TIGHTEN FRONT ENGINE MOUNTING THROUGH BOLT
Torque: 96 N–m (980 kgf–cm, 71 ft–lbf)

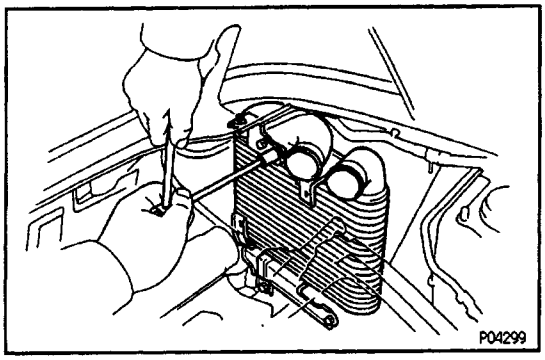

15. INSTALL CAC
Install the CAC and upper bracket with the five bolts.

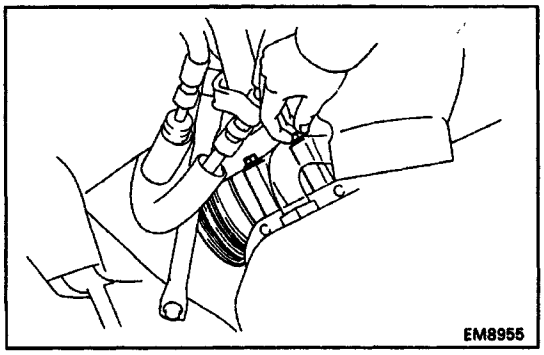

16. INSTALL A/C COMPRESSOR

(a) Temporarily install the A/C compressor with the two bolts.

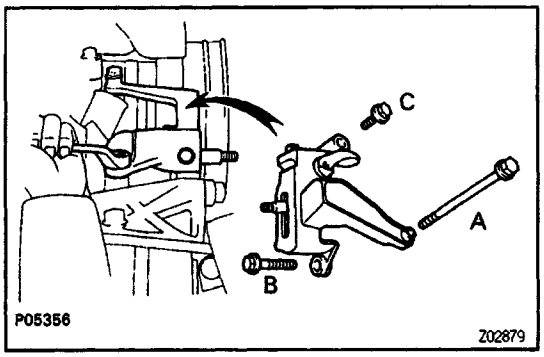

(b) Install the idler pulley bracket with the three bolts.

Torque:

25 N–m (250 kgf–cm, 18 ft–lbf) for A

27 N–m (275 kgf–cm. 20 ft–lbf) for B

37 N–m (375 kgf–cm, 27 ft–lbf) for C

(c) Connect the A/C compressor connector.

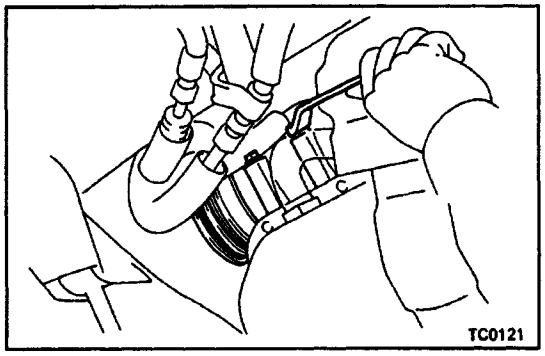

(d) Tighten the two bolts of the lower side of the A/C compressor.

Torque: 25 N–m (250 kgf–cm, 18 ft–lbf)

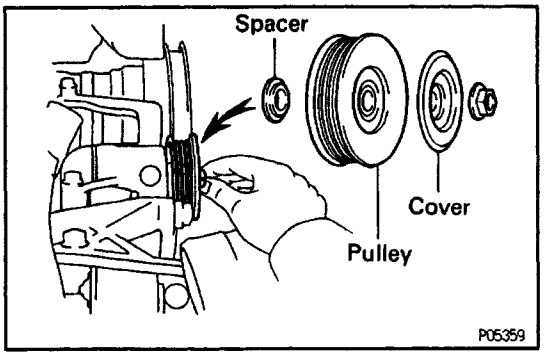

(e) Temporarily install the spacer, idler pulley and pulley cover with the nut.

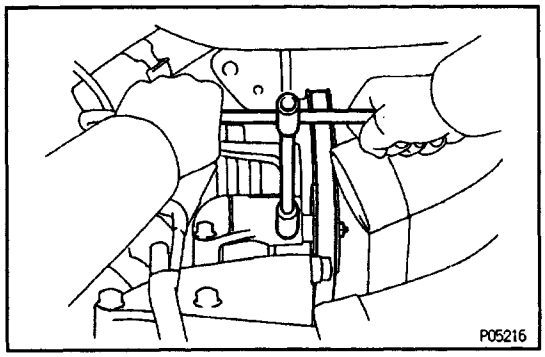

(f) Install the drive belt with the adjusting bolt.

(g) Tighten the idler pulley nut.

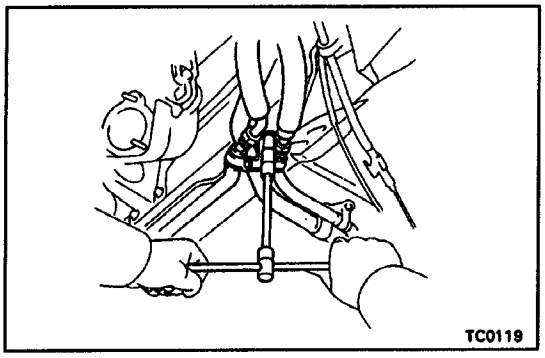

(h) Install the A/C pipes with the two clamps and nut.

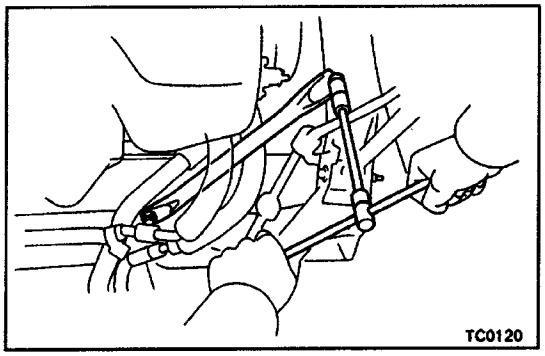

(i) Install the lower suspension brace with the two bolts.
Torque: 73 N–m (740 kgf–cm, 64 ft–lbf)

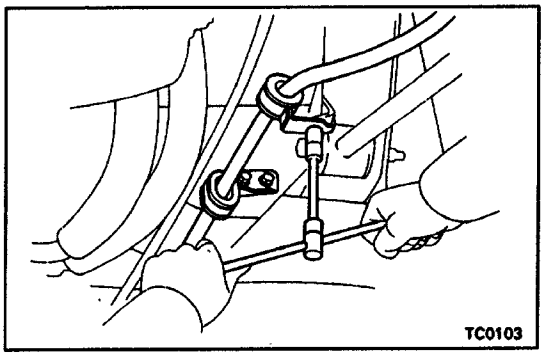

(j) Install the parking brake cable with the two clamp and three bolts.

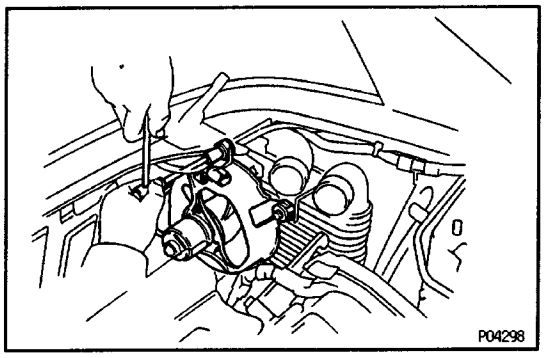

17. INSTALL ENGINE COMPARTMENT ELECTRIC COOLING FAN

(a) Install the cooling fan with the three bolts.
(b) Connect the cooling fan connector.

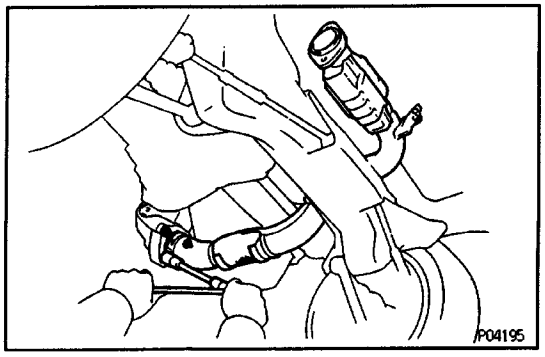

18. INSTALL FRONT EXHAUST PIPE

(a) Place a new gasket to the front of the front exhaust pipe.
(b) Using a 14 mm deep socket wrench, install the front exhaust pipe with three new nuts.
Torque: 62 N–m (630 kgf–cm, 46 ft–lbf)

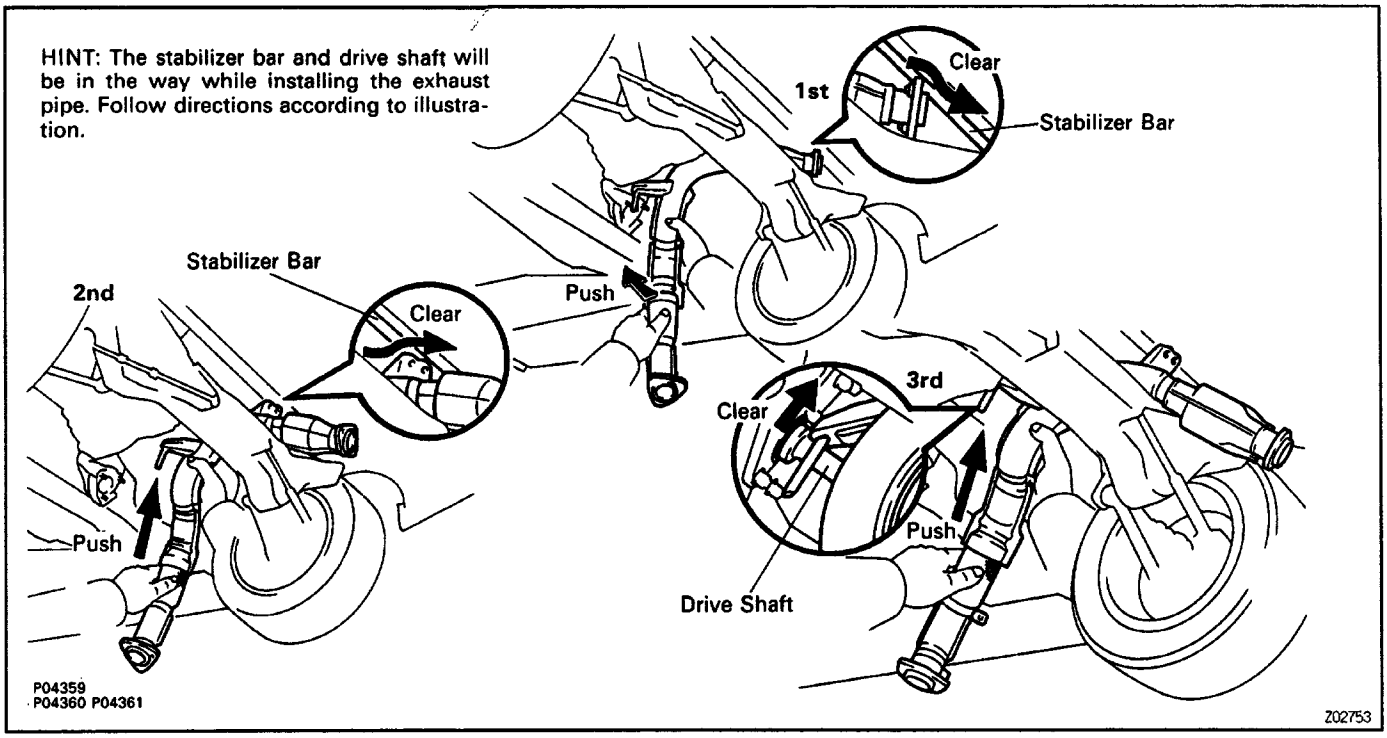

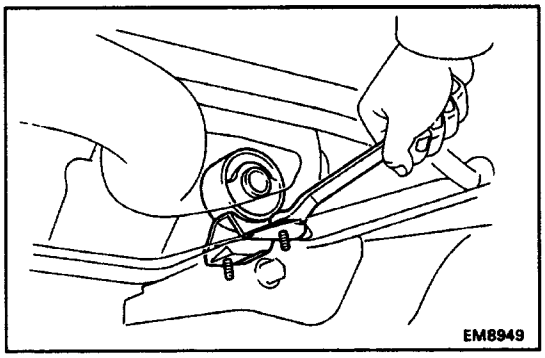

(c) Install the support bracket with the two bolts.
Torque: 21 N–m (210 kgf–cm, 15 ft–lbf)

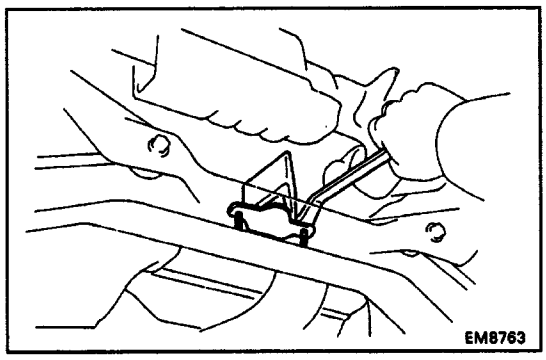

(d) Install the damper with the two bolts.
Torque: 21 N–m (210 kgf–cm, 15 ft–lbf)

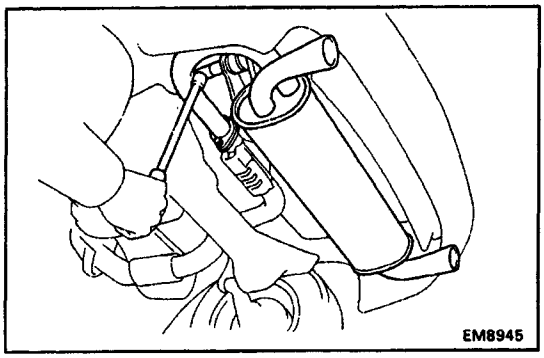

19. INSTALL TAILPIPE

(a) Place a new gasket to the rear of the front exhaust pipe.

(b) Install the tailpipe to the body bracket with the two bolts and nut.

Torque: 66 N–m (670 kgf–cm, 48 ft–lbf)

(c) Install the two bolts holding the front exhaust pipe to the tailpipe.

Torque: 43 N–m (440 kgf–cm, 32 ft–lbf)

(d) Install the two bolts holding the front exhaust pipe bracket to the tailpipe bracket.

Torque: 19 N–m (190 kgf–cm, 14 ft–lbf)

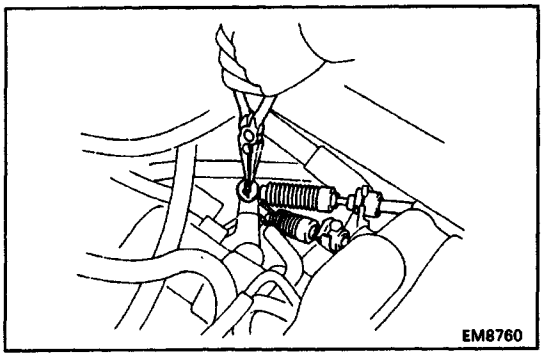

20. CONNECT TRANSAXLE CONTROL CABLES TO TRANSAXLE

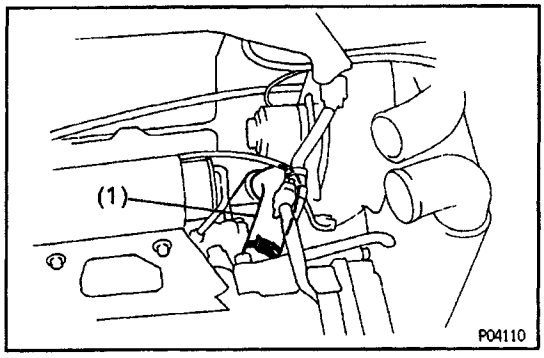

21. CONNECT HOSES

Connect the following connectors:

(1) Radiator hose to water inlet

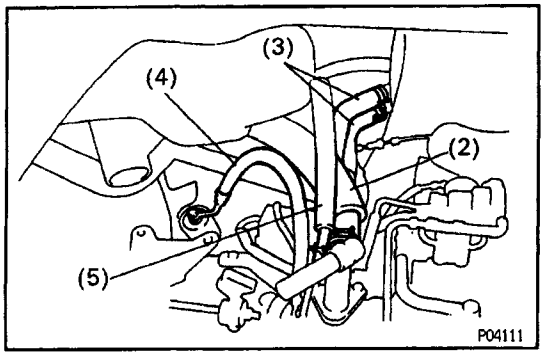

(2) Radiator hose to water outlet

(3) Two heater water hoses

(4) Fuel inlet hose to fuel filter

(5) Fuel return hose

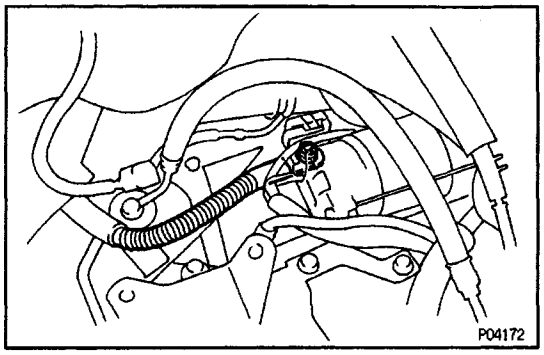

22. CONNECT STARTER CABLE

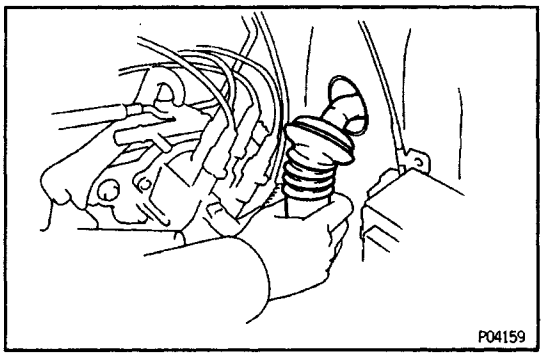

23. CONNECT ENGINE WIRE TO LUGGAGE COMPARTMENT

(a) Push in the engine wire through the luggage com–partment.

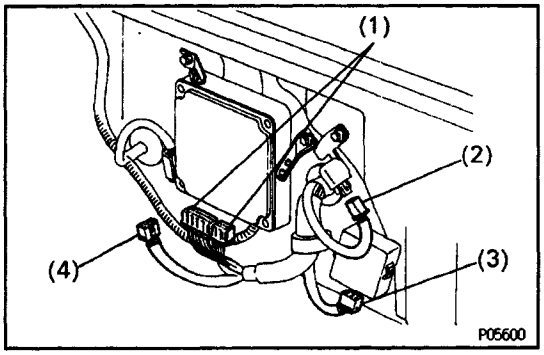

(b) Connect the following connectors:
(1) Two PCME connectors
(2) Starter relay connector
(3) Engine compartment electric cooling fan con–nector
(4) Engine compartment wire connector

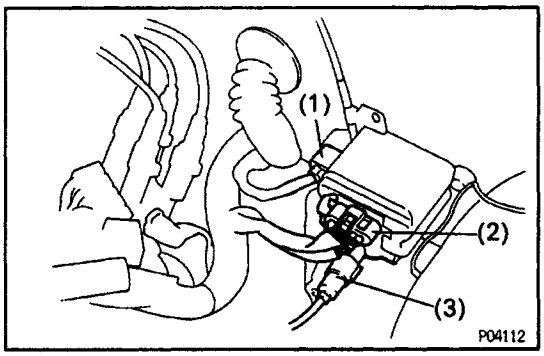

24. CONNECT CONNECTORS AND HIGH–TENSION CORD

Connect the following connectors and cord:
(1) Noise filter connector
(2) Igniter connector
(3) High–tension cord to ignition coil

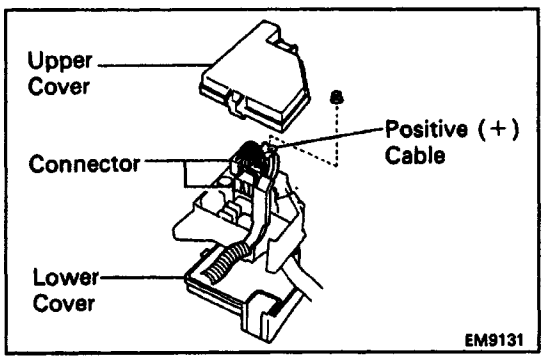

25. CONNECT ENGINE WIRE, AND INSTALL ENGINE RELAY BOX

(a) Connect the two connectors and positive (+) cable of the engine wire to the relay box.
(b) Install the upper and lower covers to the relay box.

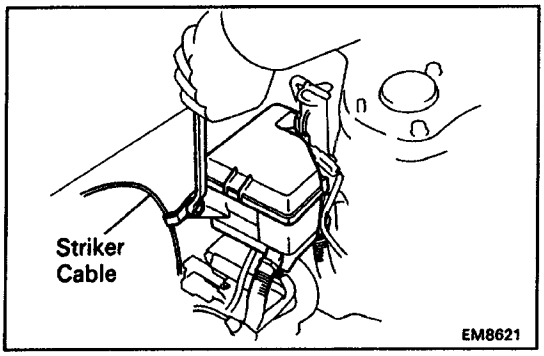

(c) Install the relay box with the two bolts. Install the luggage compartment striker cable.

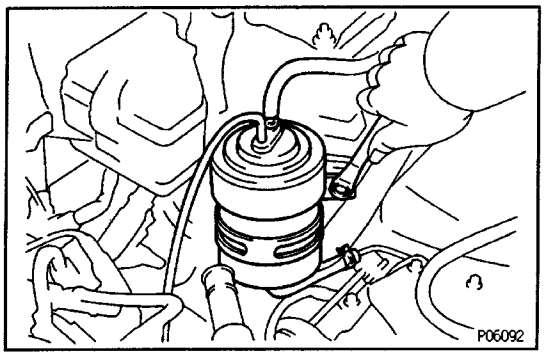

26. INSTALL CHARCOAL CANISTER

(a) Install the charcoal canister with the two bolts.
(b) Connect the three hoses.

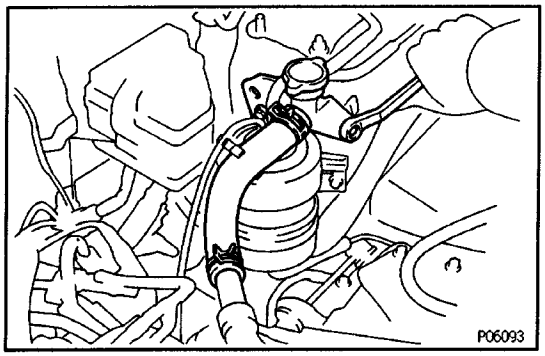

27. INSTALL WATER FILLER

(a) Install the water filler with the two bolts.
(b) Connect the following hoses:
  (1) Water filler hose
  (2) Coolant reservoir hose

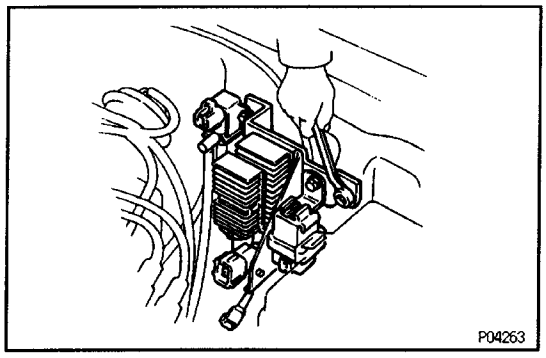

28. INSTALL SOLENOID RESISTOR ASSEMBLY AND A/C IDLE–UP VALVE

(a) Install the solenoid resistor assembly and A/C idle–up valve with the two bolts.
(b) Connect the following connectors:
- Solenoid resistor connector
- Fuel pump relay connector
- Fuel pump resistor connector

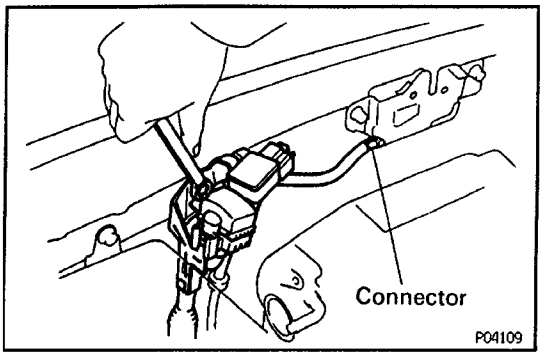

29. CONNECT DATA LINK CONNECTOR 1 AND MAP

(a) Install the data link connector 1 and MAP to the body with the bolt.
(b) Connect the engine hood courtesy switch connector.

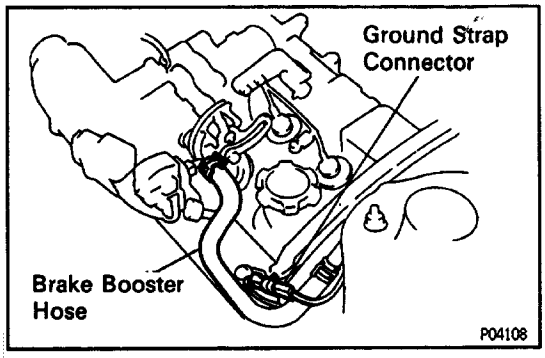

30. CONNECT BRAKE BOOSTER VACUUM HOSE
31. CONNECT GROUND STRAP CONNECTOR

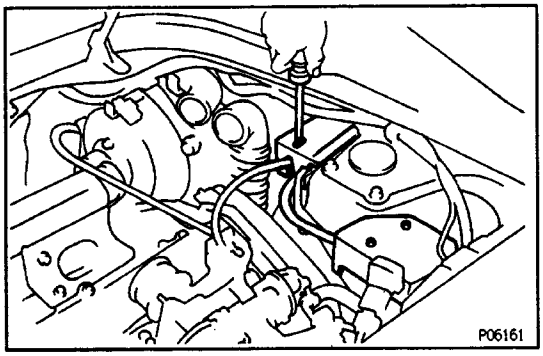

32. (w/ CRUISE CONTROL SYSTEM)
INSTALL CRUISE CONTROL ACTUATOR AND ACCELERATOR LINKAGE
33. (w/o CRUISE CONTROL SYSTEM)
CONNECT ACCELERATOR LINKAGE TO THROTTLE BODY

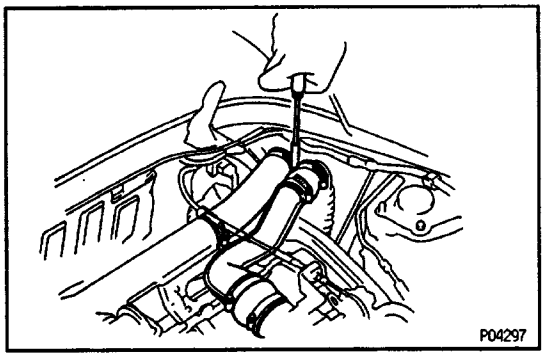

34. INSTALL NO.1 AND NO.2 INTAKE AIR CONNECTORS

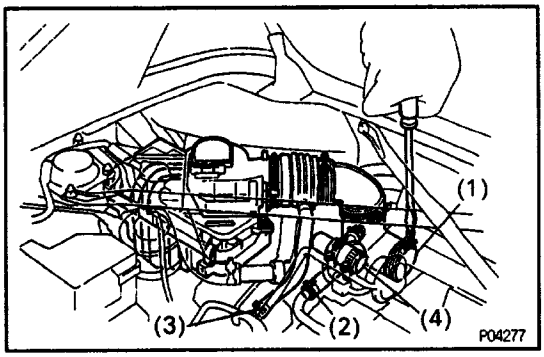

35. INSTALL AIR CLEANER HOUSING
(a) Install the air cleaner case with the three bolts.
(b) Install the air filter.
(c) Install the air cleaner cap and air flow sensor assembly with the four clips.
(d) Connect the following hoses:
(1) Air cleaner hose to turbocharger
(2) PCV hose to cylinder head cover
(3) Air hose to No.2 air tube
(4) Air hose to air by–pass valve
(e) Connect the air flow sensor connector.

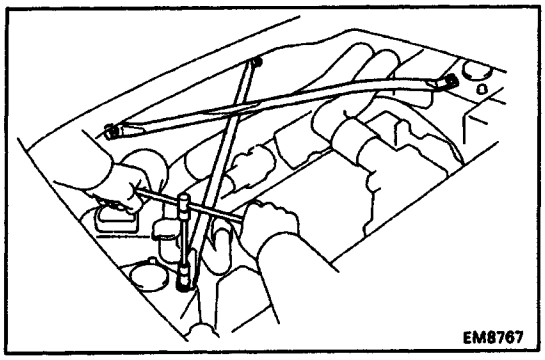

36. INSTALL UPPER SUSPENSION BRACE

Install the upper brace with the two bolts and two nuts.

Torque:
73 N–m (740 kgf–cm, 54 ft–lbf) for bolt
64 N–m (650 kgf–cm, 47 ft–lbf) for nut

37. CONNECT CABLE TO NEGATIVE TERMINAL OF BATTERY

38. FILL WITH ENGINE COOLANT

39. FILL WITH ENGINE OIL

40. START ENGINE AND CHECK FOR LEAKS

41. PERFORM ENGINE ADJUSTMENT (See Tune–Up)

42. INSTALL ENGINE UNDER COVERS

43. INSTALL ENGINE HOOD

44. INSTALL ENGINE HOOD SIDE PANELS

45. PERFORM ROAD TEST

Check for abnormal noise, shock slippage, correct shift points and smooth operation.

46. RECHECK ENGINE COOLANT AND OIL LEVELS

CYLINDER HEAD

EGOWC–01

COMPONENTS FOR REMOVAL AND INSTALLATION

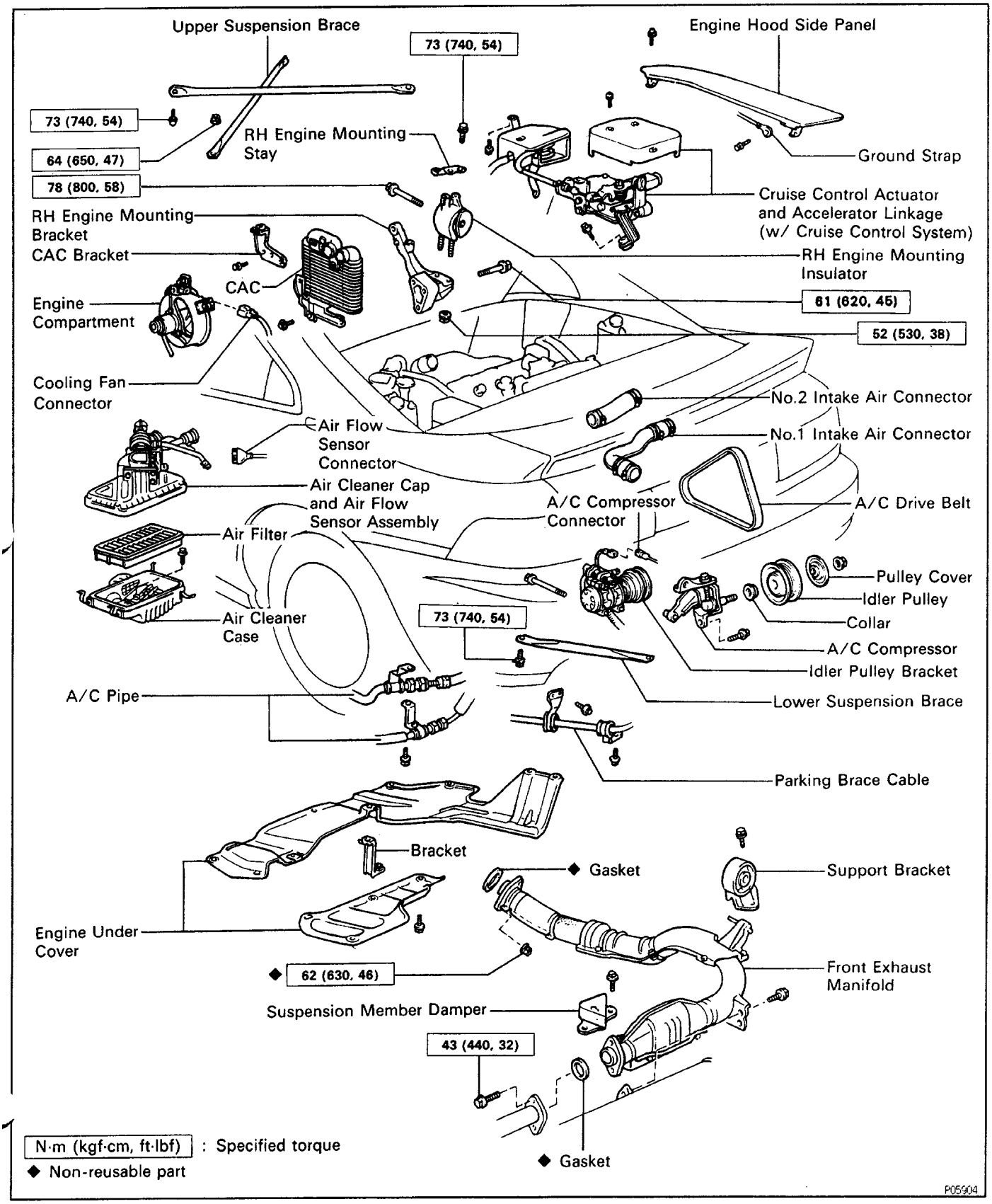

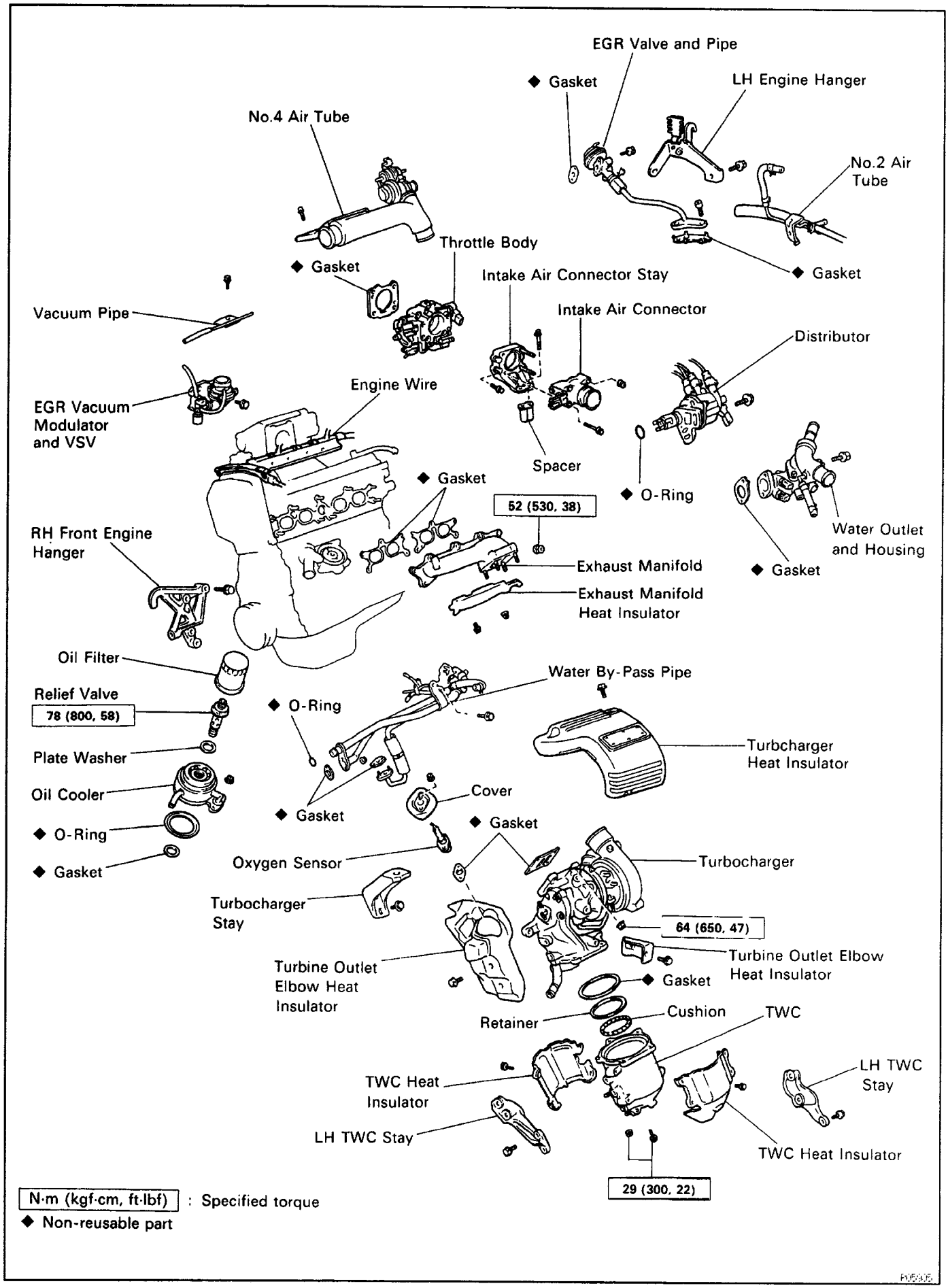
EGR Valve and Pipe
◆ Gasket
LH Engine Hanger
No.4 Air Tube
No.2 Air Tube
Throttle Body
◆ Gasket
◆ Gasket
Intake Air Connector Stay
Intake Air Connector
Vacuum Pipe
Distributor
EGR Vacuum Modulator and VSV
Engine Wire
Spacer
◆ O-Ring
◆ Gasket
52 (530, 38)
Water Outlet and Housing
RH Front Engine Hanger
Exhaust Manifold
◆ Gasket
Exhaust Manifold Heat Insulator
Oil Filter
Water By-Pass Pipe
Relief Valve
78 (800, 58)
◆ O-Ring
Turbcharger Heat Insulator
Plate Washer
Cover
Oil Cooler
◆ Gasket
◆ Gasket
◆ O-Ring
Turbocharger
Oxygen Sensor
◆ Gasket
Turbocharger Stay
64 (650, 47)
Turbine Outlet Elbow Heat Insulator
Turbine Outlet Elbow Heat Insulator
◆ Gasket
Retainer
Cushion
TWC
TWC Heat Insulator
LH TWC Stay
LH TWC Stay
TWC Heat Insulator
29 (300, 22)
N·m (kgf·cm, ft·lbf) : Specified torque
◆ Non-reusable part

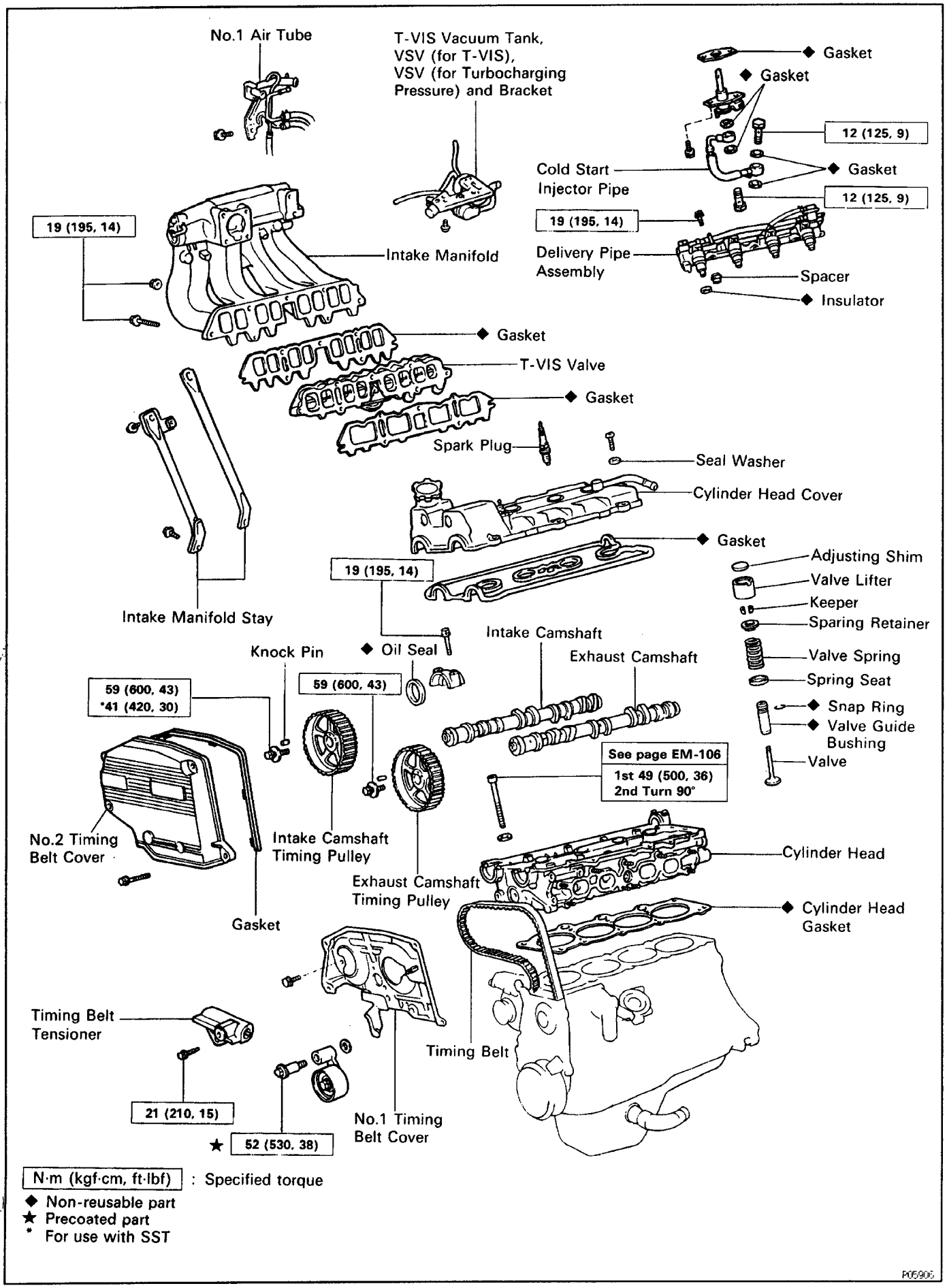

N·m (kgf·cm, ft·lbf) : Specified torque
◆ Non-reusable part
★ Precoated part
* For use with SST

P05905

EGOWD–01

REMOVAL OF CYLINDER HEAD

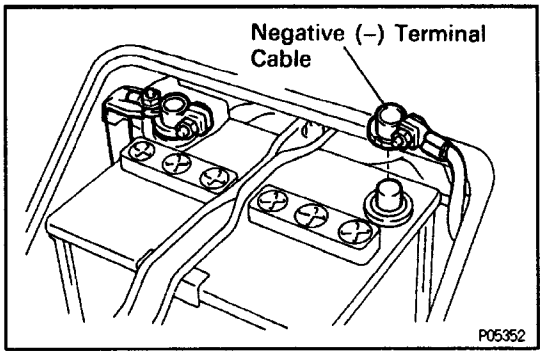

(See Components for Removal and Installation)

1. DISCONNECT CABLE FROM NEGATIVE TERMINAL OF BATTERY

CAUTION: Turn the ignition switch to ”LOCK”. Disconnect the negative terminal from the battery. Wait at least 20 seconds before proceeding with work.

2. DRAIN ENGINE COOLANT

3. REMOVE ENGINE UNDER COVERS

4. REMOVE ENGINE HOOD SIDE PANELS

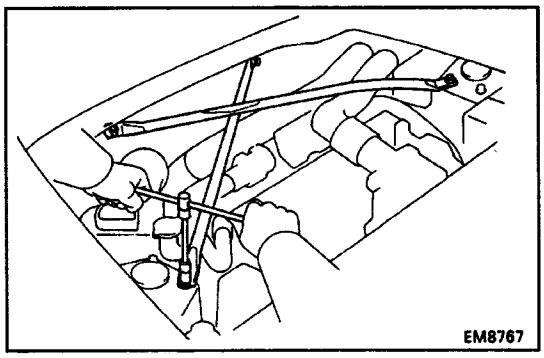

5. REMOVE UPPER SUSPENSION BRACE

Remove the two bolts, two nuts and upper brace.

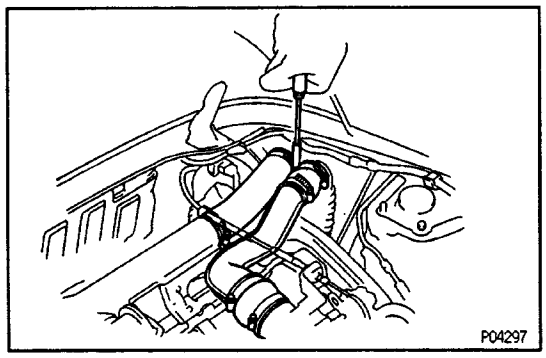

6. REMOVE N4.1 AND NO.2 INTAKE AIR CONNECTORS

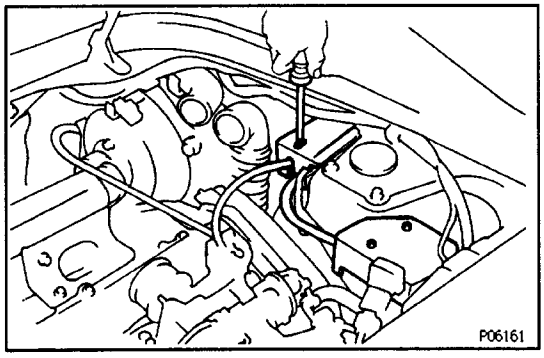

7. (w/ CRUISE CONTROL SYSTEM) REMOVE CRUISE CONTROL ACTUATOR AND ACCELERATOR LINKAGE

8. (w/o CRUISE CONTROL SYSTEM) DISCONNECT ACCELERATOR LINKAGE FROM THROTTLE BODY

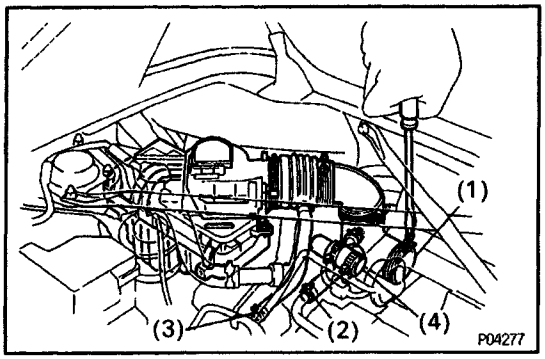

8. REMOVE AIR CLEANER HOUSING

(a) Disconnect the air flow sensor connector.
(b) Disconnect the following hoses:
(1) Air cleaner hose from turbocharger
(2) PCV hose from cylinder head cover
(3) Air hose from No.2 air hose
(4) Air hose from air by–pass valve
(c) Disconnect the four clamps, and remove the air cle–aner cap and air flow sensor assembly.
(d) Remove the air filter.
(e) Remove the three bolts and air cleaner case.

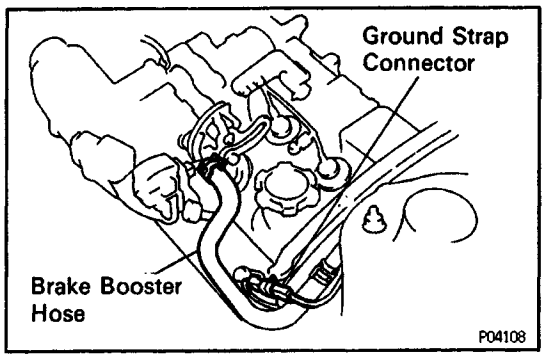

10. DISCONNECT GROUND STRAP CONNECTOR

11. DISCONNECT BRAKE BOOTER VACUUM HOSE

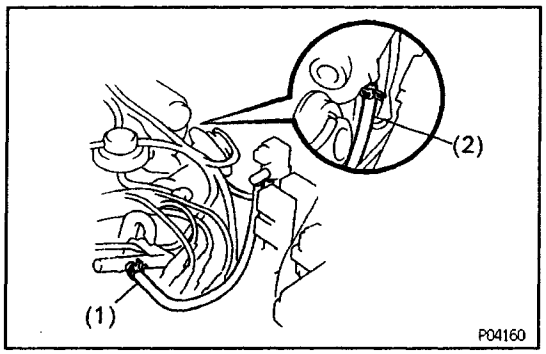

12. DISCONNECT A/C IDLE–UP AIR HOSES

Disconnect the following hose:
(1) Air hose from No.2 air tube
(2) Air hose from intake manifold

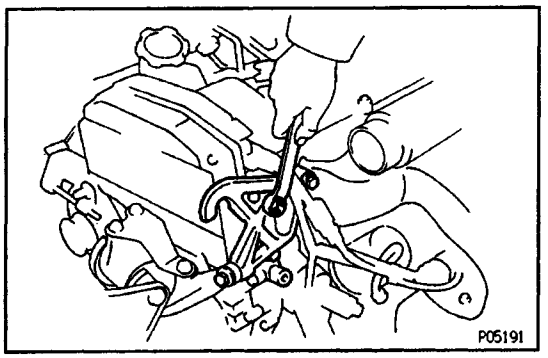

13. REMOVE RH FRONT ENGINE HANGER

Remove the four bolts and engine hanger.

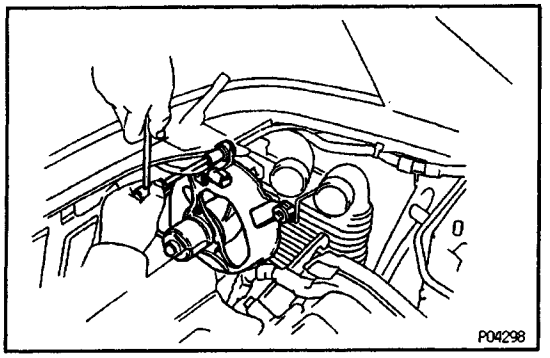

14. REMOVE ENGINE COMPARTMENT ELECTRIC COOLING FAN

(a) Disconnect the cooling fan connector.
(b) Loosen the three bolts, and remove the cooling fan.

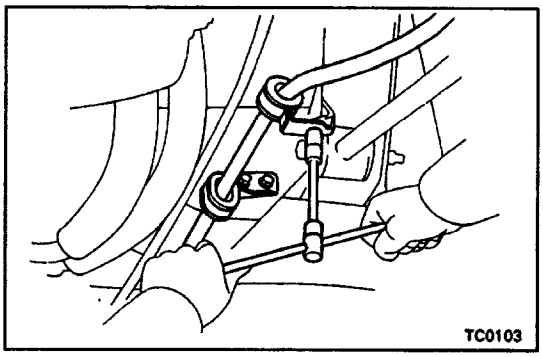

15. DISCONNECT A/C COMPRESSOR FROM ENGINE

(a) Remove the three clamp bolts, and disconnect the parking brake cable.

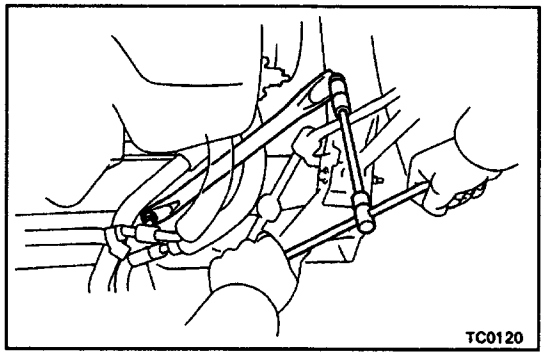

(b) Remove the two bolts and lower suspension brace.

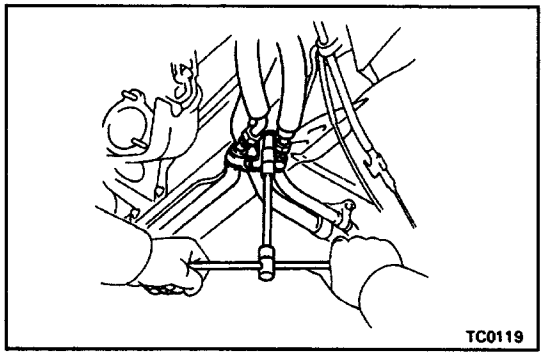

(c) Remove the clamp nut, and disconnect the two A/C pipes.

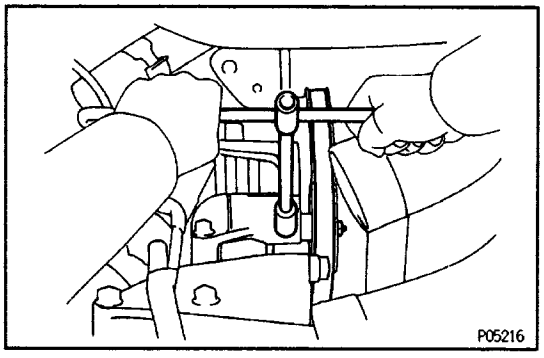

(d) Loosen the idler pulley nut.
(e) Loosen the adjusting bolt, and remove the drive belt.

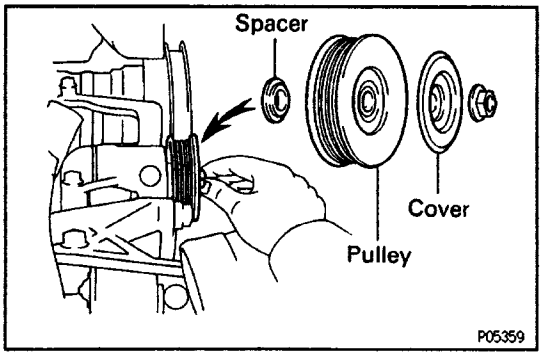

(f) Remove the nut, pulley cover, idler pulley and spacer.

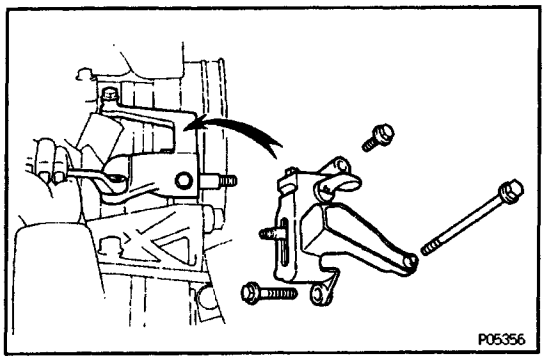

(g) Disconnect the A/C compressor connector.
(h) Remove the three bolts and idler pulley bracket.

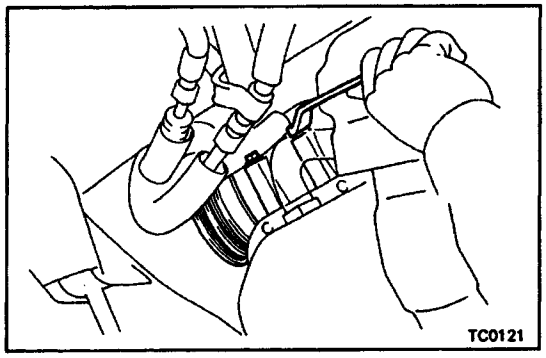

(i) Remove the two bolts, and disconnect the A/C compressor from the engine.

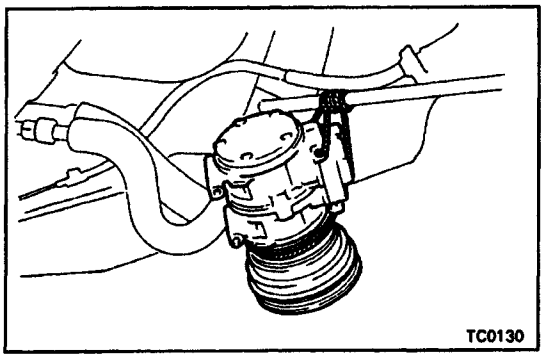

HINT: Suspend the A/C compressor to strut rod with a string.

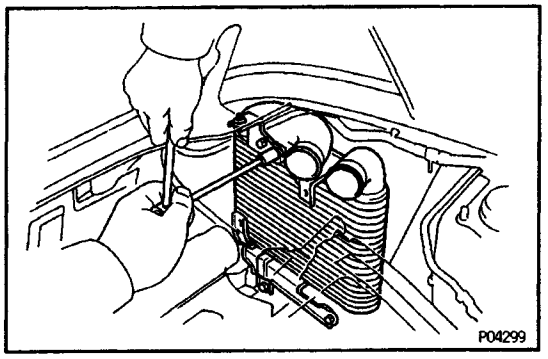

16. REMOVE CAC

(a) Remove the two bolts holding the CAC to the upper bracket.
(b) Remove the three bolts, upper bracket and CAC.

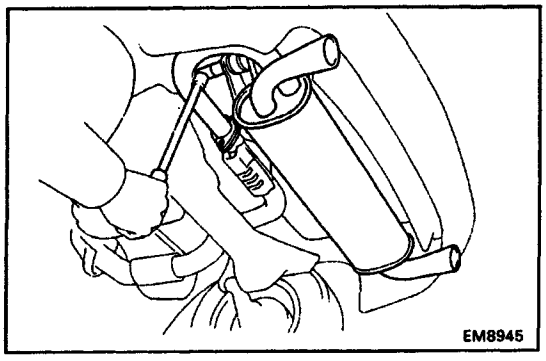

17. REMOVE TAILPIPE

(a) Remove the two bolts holding the front exhaust pipe to the tailpipe bracket.
(b) Remove the two bolts holding the front exhaust pipe to the tailpipe.
(c) Remove the two bolts, tailpipe and gasket.

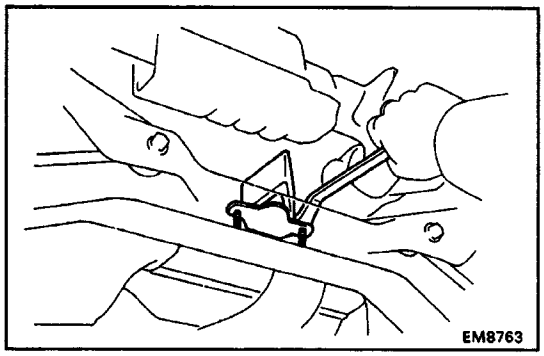

18. REMOVE FRONT EXHAUST PIPE

(a) Remove the two bolts and damper.

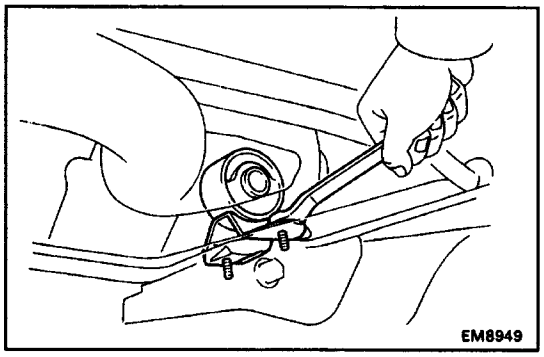

(b) Remove the two bolts and support bracket.

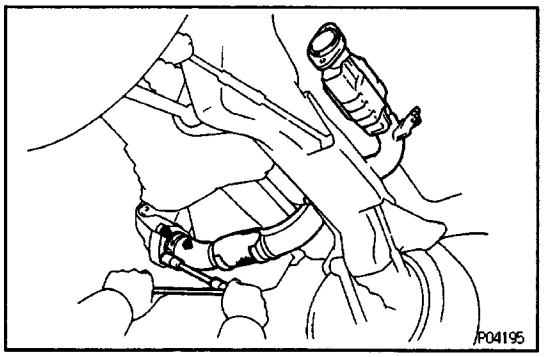

(c) Using a 14 mm deep socket wrench, remove the three nuts.

(d) Remove the front exhaust pipe and gasket.

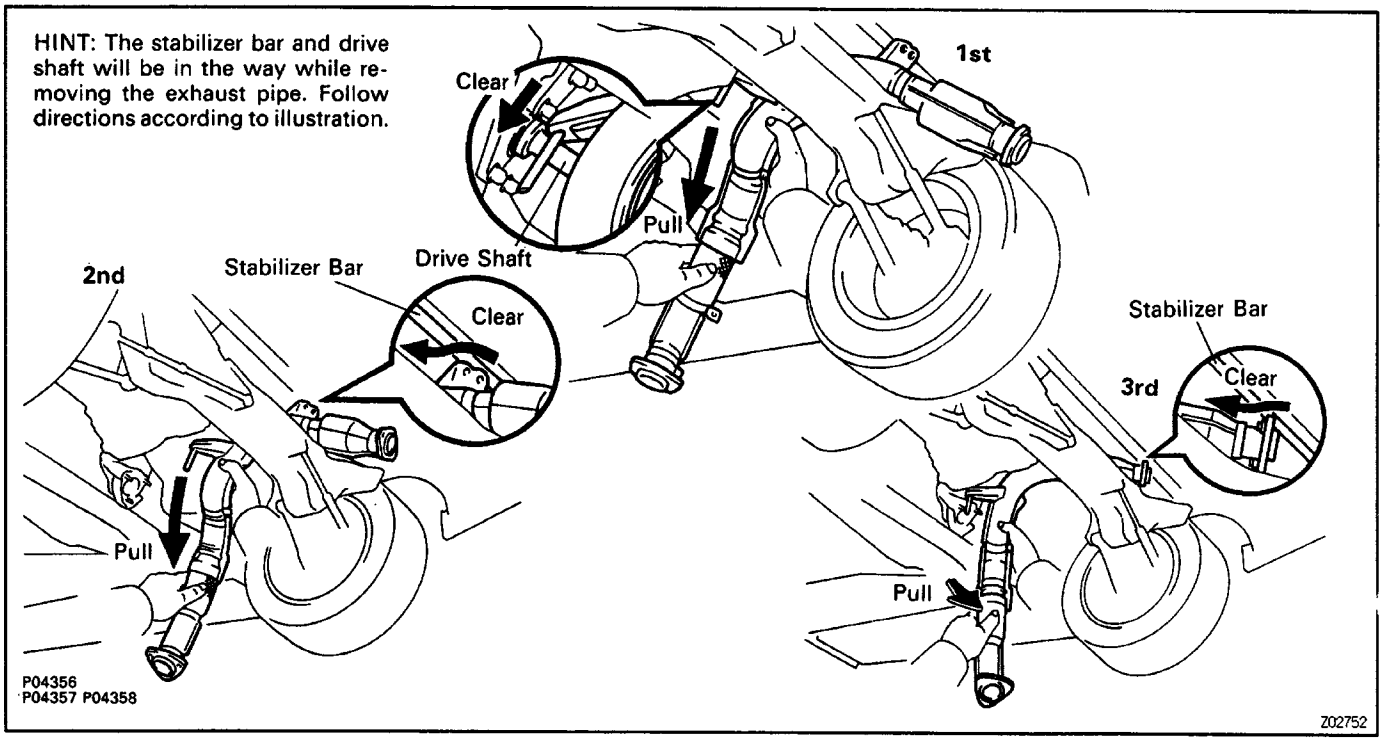

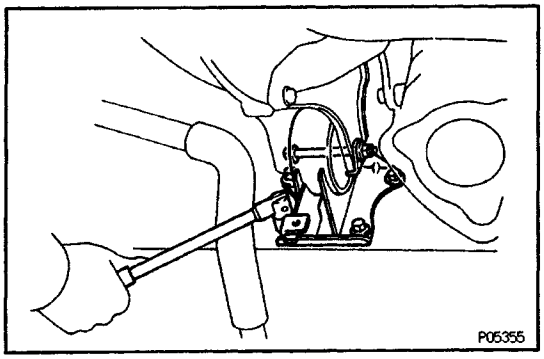

19. REMOVE FRONT ENGINE MOUNTING INSULATOR

(a) Remove the through bolt and nut holding the mount–ing insulator to the mounting bracket.

(b) Remove the four bolts and mounting insulator.

20. REMOVE FRONT ENGINE MOUNTING BRACKET AND CLUTCH RELEASE CYLINDER

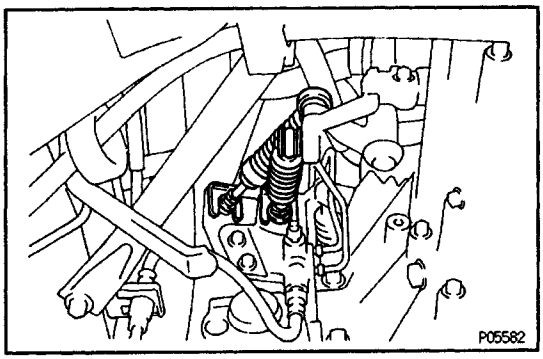

(a) Disconnect the two transaxle control cables from the transaxle.

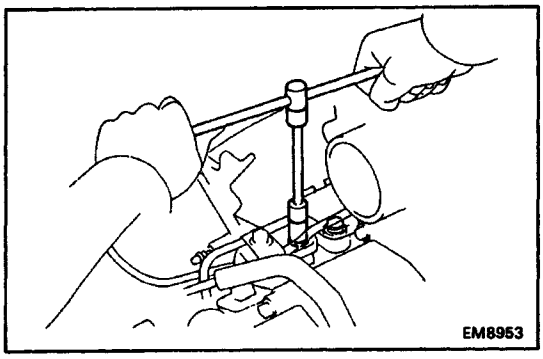

(b) Remove the two bolts holding the clutch release cyl–inder to the transaxle.

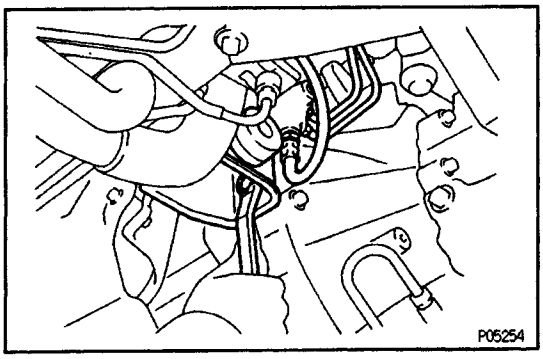

(c) Remove the two bolts and mounting bracket.

(d) Disconnect the clutch release cylinder from the tra–nsaxle.

Remove the three bolts and stiffener plate.

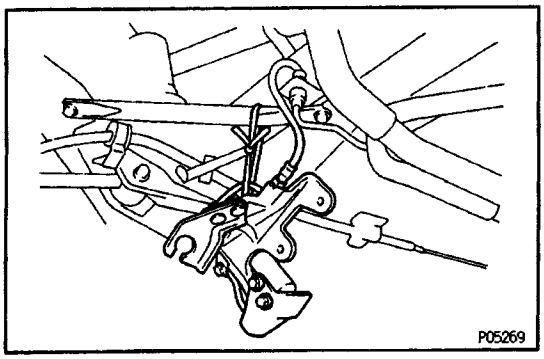

HINT: Suspend the clutch release cylinder to the suspension brace with a string.

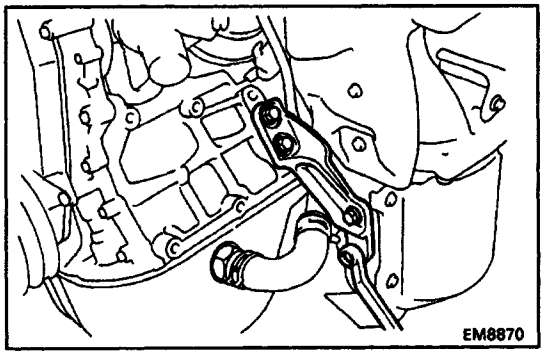

21. REMOVE MAIN TWC

(a) Remove the four bolts and RH TWC stay.

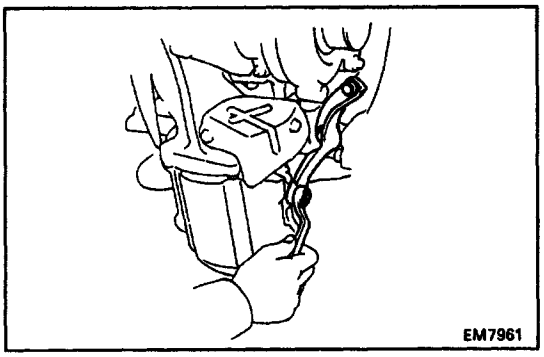

(b) Remove the three bolts and LH TWC stay.

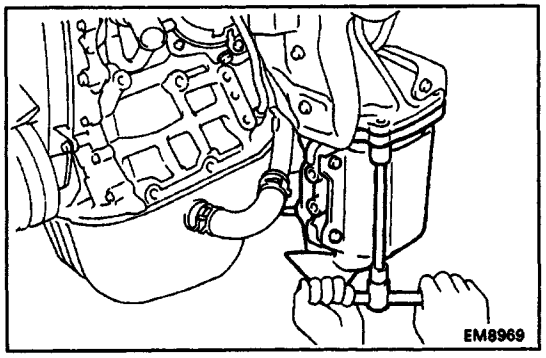

(c) Remove the three bolts, two nuts, TWC, gasket, retainer and cushion.

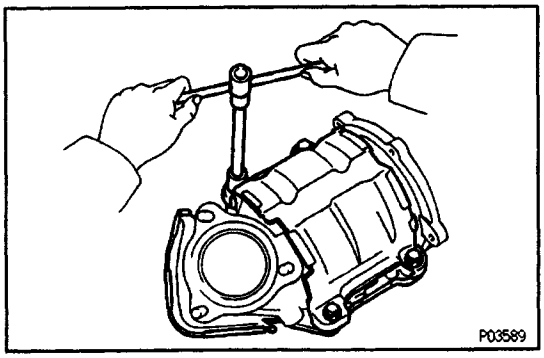

(d) Remove the nine bolts and two heat insulators from the TWC.

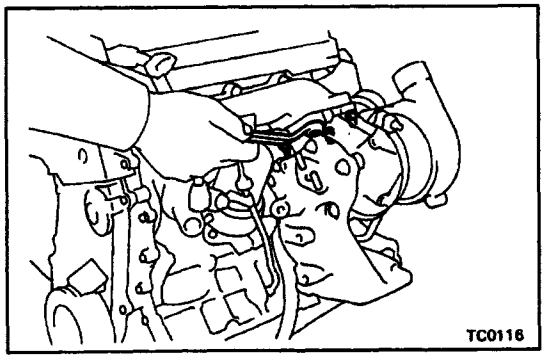

22. REMOVE TURBOCHARGER

(See Turbocharger Removal under Turbocharger System)

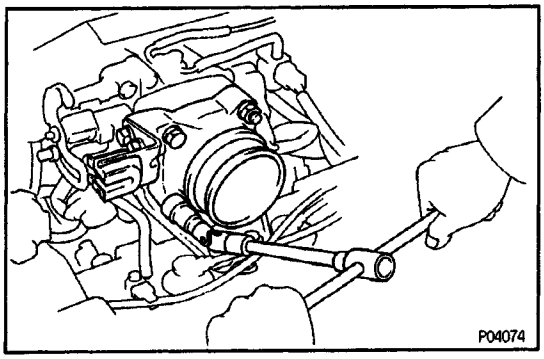

23. REMOVE INTAKE AIR CONNECTOR

Remove the two bolts, two nuts and intake air con–nector.

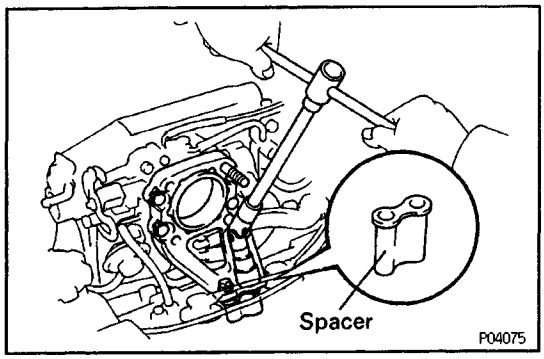

24. REMOVE INTAKE AIR CONNECTOR STAY

(a) Remove the six bolts and intake air connector stay.
(b) Remove the spacer.

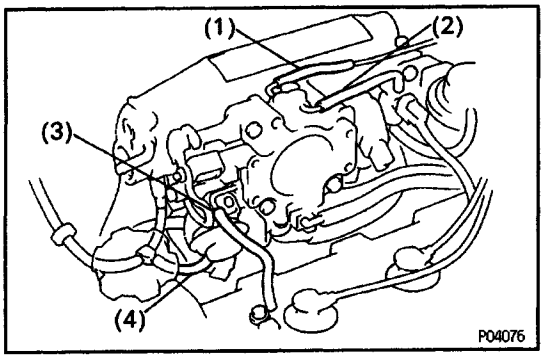

25. REMOVE THROTTLE BODY

(a) Disconnect the following connector:
- Throttle position sensor connector
- IACV connector

(b) Disconnect the following hoses:
(1) Vacuum hose from port ”P” of throttle body
(2) Vacuum hose from port ”E” of throttle body
(3) PCV hose from port PCV of throttle body
(4) Vacuum hose from throttle body opener

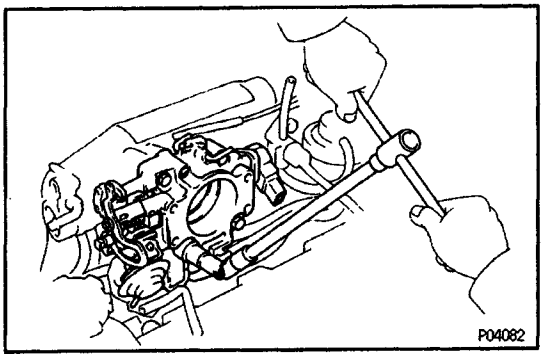

(c) Remove the four bolts, and disconnect the throttle body from the intake manifold.
(d) Remove the throttle body gasket.

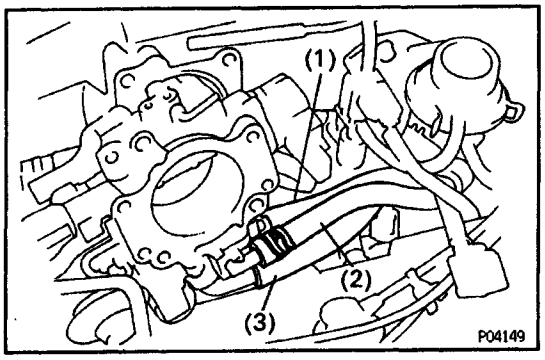

(e) Disconnect the following hoses from the throttle body, and remove the throttle body:
(1) Water by–pass hose (from upper side of No.1 air tube)
(2) Water by–pass hose (from lower side of No. 1 air tube)
(3) Air hose (from No. 1 air tube)

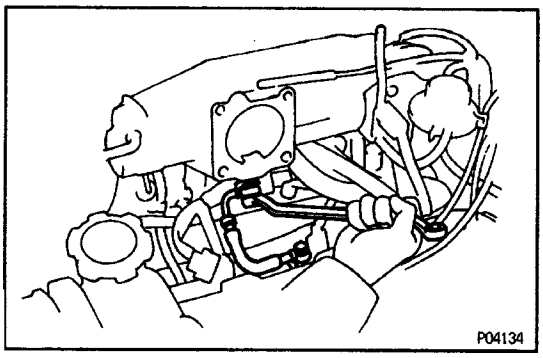

26. REMOVE COLD START INJECTOR PIPE

Remove the two union bolts, four gaskets and cold start injector pipe.

CAUTION:

- Put a suitable container or shop towel under the Injector pipe.
- Slowly loosen the union bolts.

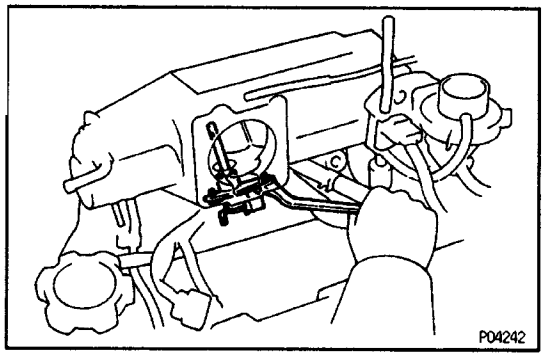

27. REMOVE COLD START INJECTOR

(a) Disconnect the cold start injector connector.
(b) Remove the two bolts, cold start injector and gasket.

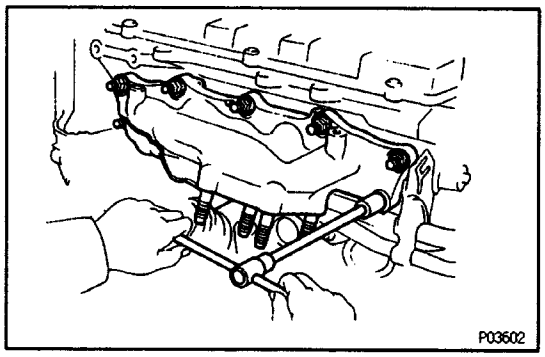

28. REMOVE EXHAUST MANIFOLD

(a) Remove the nine nuts, exhaust manifold and gasket.

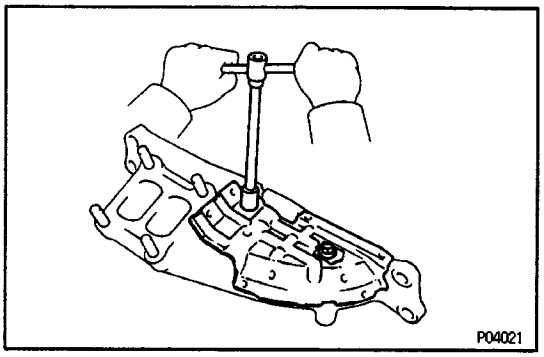

(b) Remove the bolt, nut and heat insulator.

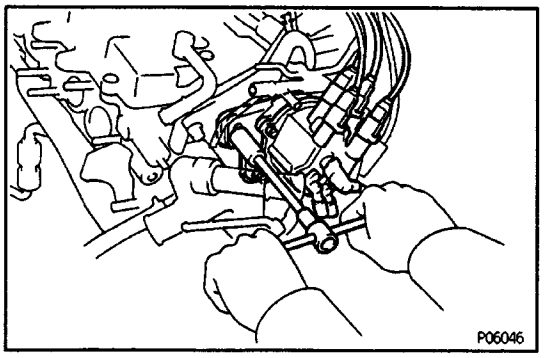

29. REMOVE DISTRIBUTOR

(a) Disconnect the high–tension cords from the spark plugs and ignition coil.
(b) Remove the two hold–down bolt, and pull out the distributor.
(c) Remove the 0–ring from the distributor housing.

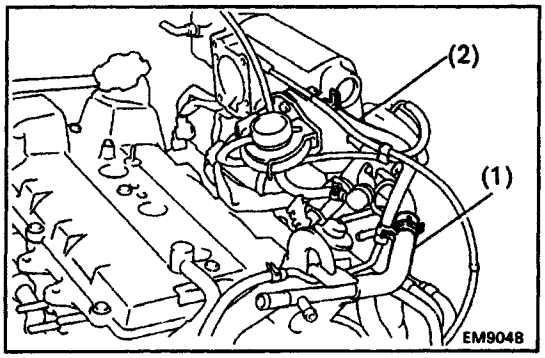

30. REMOVE NO.2 AIR TUBE

(a) Disconnect the following hoses:
(1) Air hose from No. 1 air tube
(2) Air hose from intake manifold

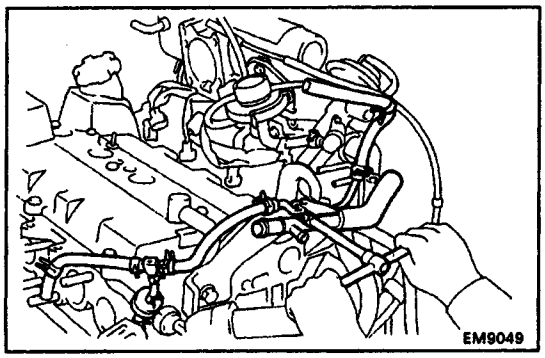

(b) Remove the bolt and No.2 air tube.

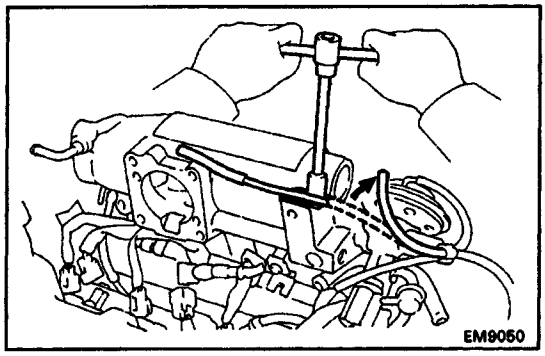

31. REMOVE LH ENGINE HANGER

Remove the two bolts and engine hanger.

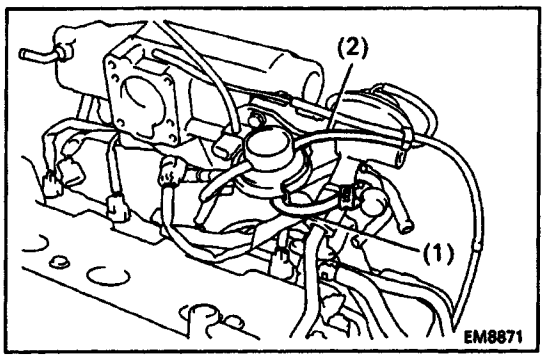

32. REMOVE EGR VACUUM MODULATOR AND VSV

(a) Disconnect the VSV connector.
(b) Disconnect the following hoses:
(1) EGR hose from EGR valve
(2) Vacuum hose from EGR vacuum modulator

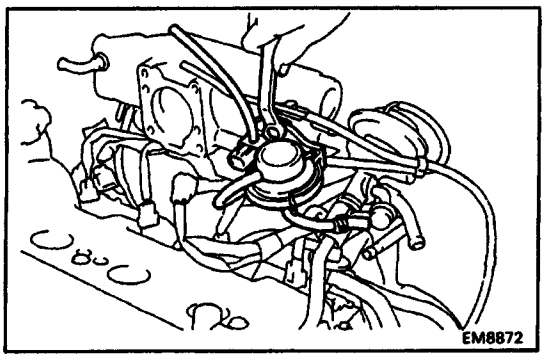

(c) Remove the bolt, the vacuum modulator and VSV assembly.



33. REMOVE VACUUM PIPE

(a) Disconnect the vacuum hose from the vacuum pipe.
(b) Remove the bolt and vacuum pipe.

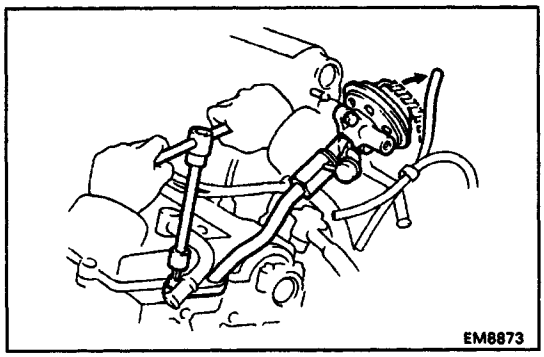

34. REMOVE EGR VALVE AND PIPE

(a) Disconnect the vacuum hose from the EGR valve.
(b) Remove the four bolts, the EGR valve, pipe assembly and two gaskets.

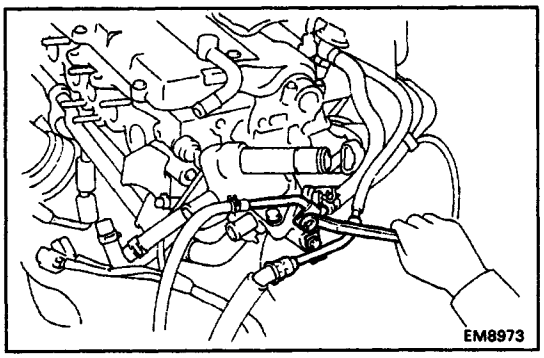

35. REMOVE WATER OUTLET AND HOUSING

(a) Disconnect the following connectors:
- Water temperature sender gauge connector
- ECTS connector
- Cold start injector time switch connector

(b) Remove the bolt, and disconnect the fuel inlet hose.
(c) Remove the bolt, and disconnect the fuel return hose.

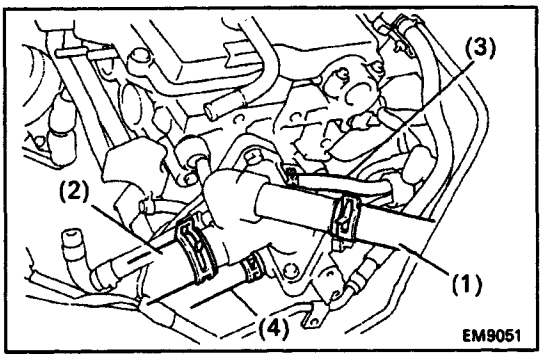

(d) Disconnect the following hoses:
(1) Water filler hose
(2) Radiator hose
(3) Water by–pass pipe hose from IACV
(4) Heater water hose

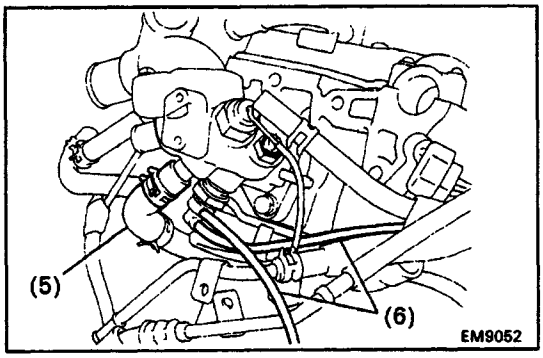

(5) Water by–pass hose from water by–pass pipe
(6) Two TVS (for EVAP) vacuum hoses

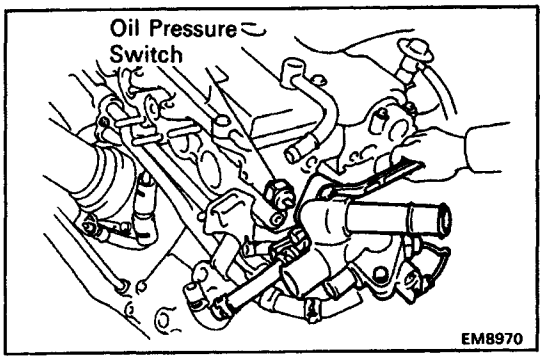

(e) Remove the two bolts, the water outlet, housing assembly and gasket.

36. REMOVE OIL PRESSURE SWITCH

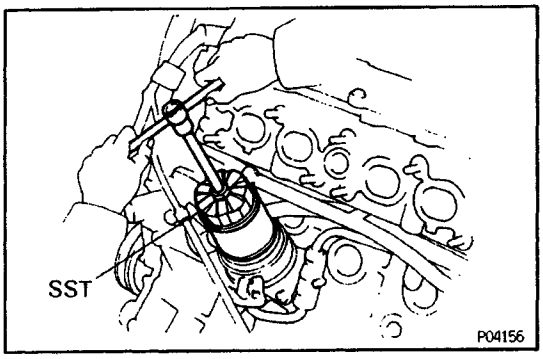

37. REMOVE OIL COOLER

(a) Using SST, remove the oil filter.
SST 09228–06500

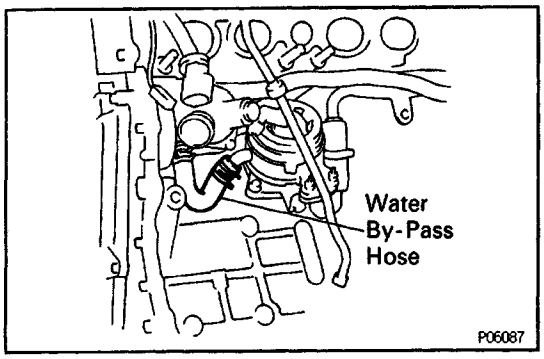

(b) Disconnect the water by – pass hose from the oil cooler.

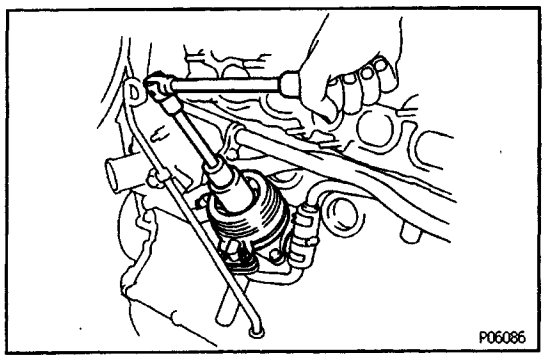

(c) Remove the relief valve and plate washer.
(d) Remove the two nuts and oil cooler.
(e) Remove the O–ring and gasket from the oil cooler.

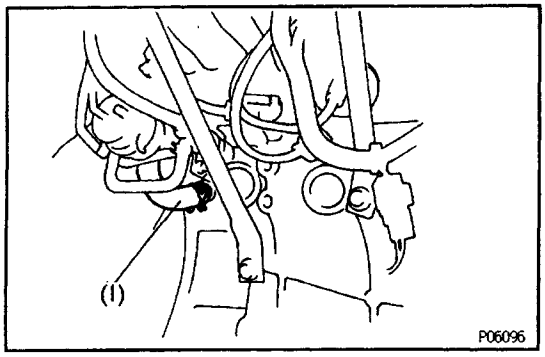

38. REMOVE WATER BY–PASS PIPE

(a) Disconnect the following hoses:
(1) Water by–pass hose from cylinder block

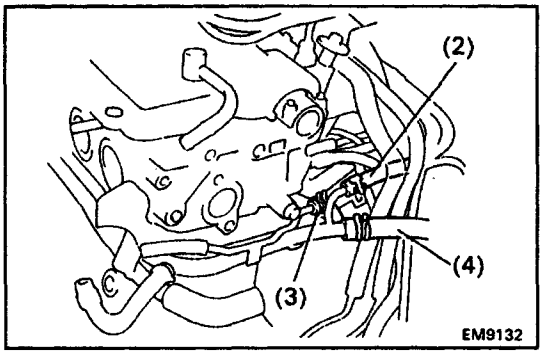

(2) Water by–pass hoses from No.1 air tube
(3) Air hose from turbocharging pressure VSV
(4) Heater water hose

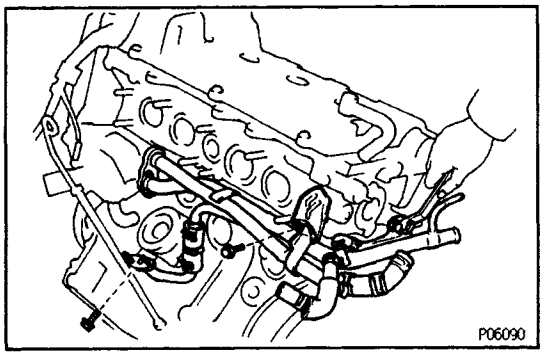

(b) Remove the three bolts, two nuts, water by–pass pipe, gasket and O–ring.

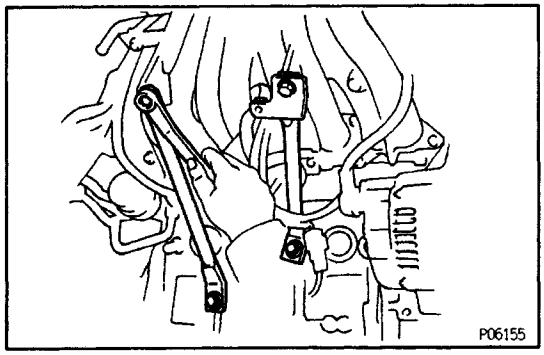

39. REMOVE INTAKE MANIFOLD STAYS

Remove the two bolts and manifold stay. Remove the two manifold stays.

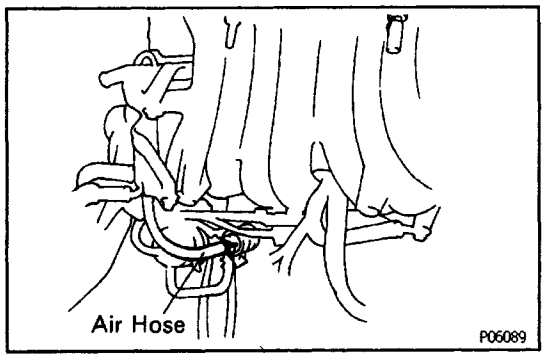

40. REMOVE NO.1 AIR TUBE

(a) Disconnect the air hose from the VSV (for turboch–arging pressure).

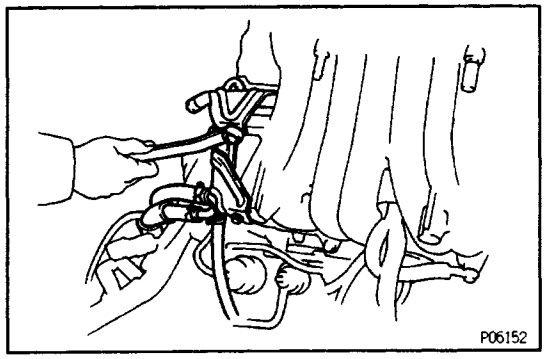

(b) Remove the two bolts and air tube.

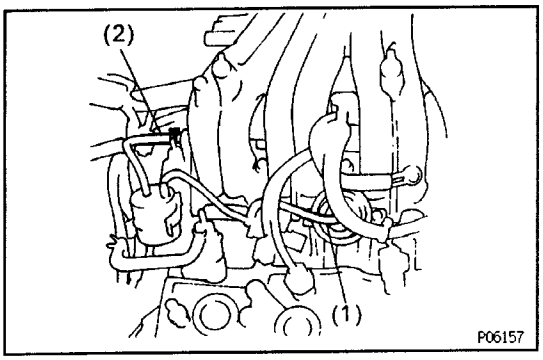

41. REMOVE T – VIS VACUUM TANK, VSV (FOR T – VIS), VSV (FOR TURBOCHARGING PRESSURE) AND BRACKET

(a) Disconnect the following connectors:
- VSV (for T–VIS) connector
- VSV (for turbocharging pressure) connector

(b) Disconnect the following hoses:
(1) Vacuum hose (from VSV for T–VIS) from T–VIS actuator
(2) Vacuum hose (from T–VIS vacuum tank) from intake manifold

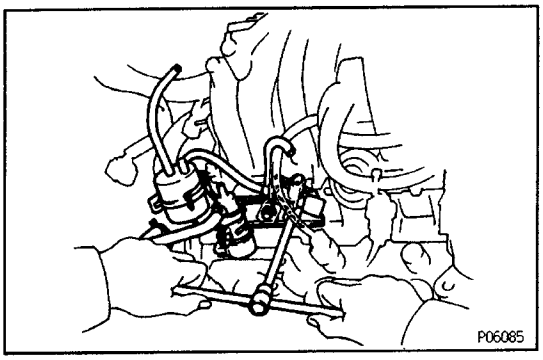

(c) Remove the two bolts, the T–VIS vacuum tank, VSV (for T–VIS), VSV (for turbocharging pressure) and bracket assembly.

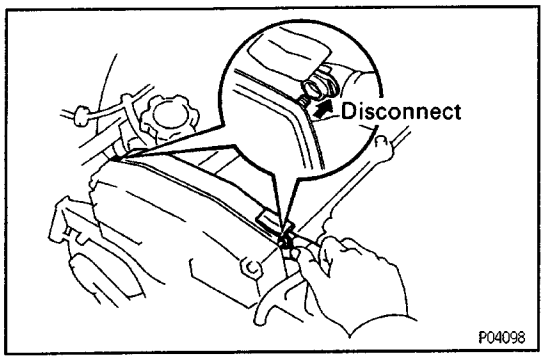

42. DISCONNECT ENGINE WIRE FROM INTAKE MANIFOLD

(a) Disconnect the two engine wire clamps from the mounting bolts on the No.2 timing belt covers.
(b) Disconnect the injector connector.

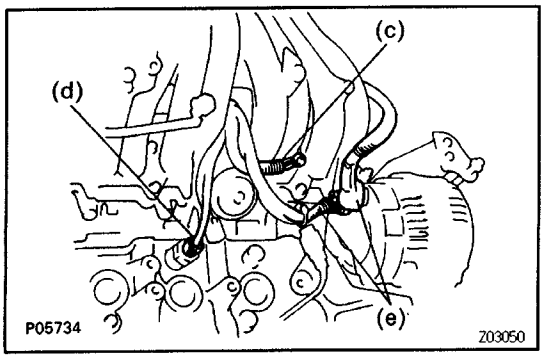

(c) Remove the bolt, and disconnect the ground strap.
(d) Disconnect the knock sensor connector.
(e) Disconnect the alternator wire and connector.

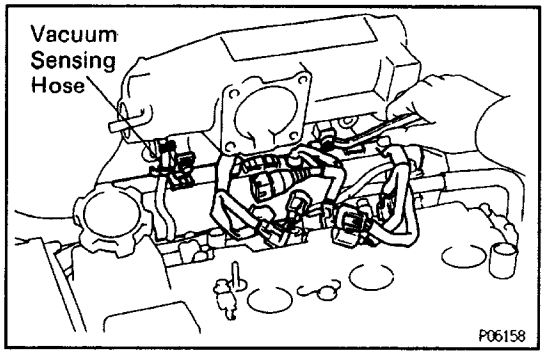

(f) Disconnect the vacuum sensing hose from the intake manifold.
(g) Remove the two bolts, and disconnect the engine wire from the intake manifold.

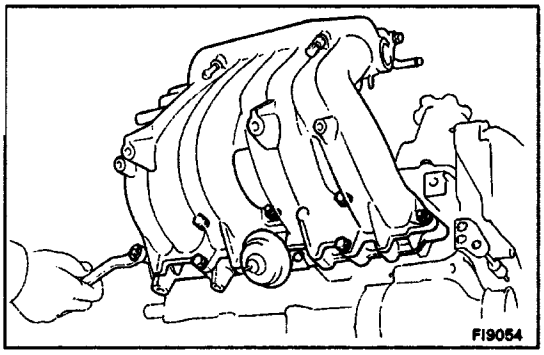

43. REMOVE INTAKE MANIFOLD AND T–VIS VALVE

Remove the four bolts, three nuts, intake manifold, T – VIS valve and two gaskets.

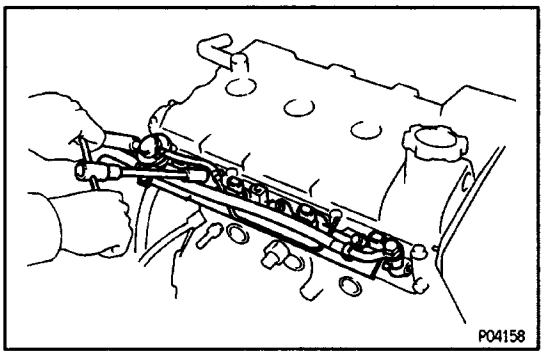

44. REMOVE DELIVERY PIPE ASSEMBLY

(a) Remove the three bolts and delivery pipe assembly.
(b) Remove the four insulators and three spacers.

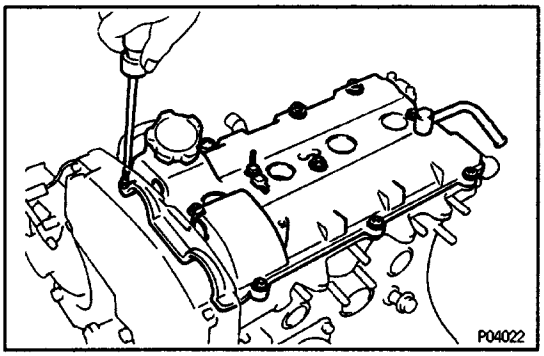

45. REMOVE CYLINDER HEAD COVER

Remove the ten screws, seal washers, head cover and two gaskets.

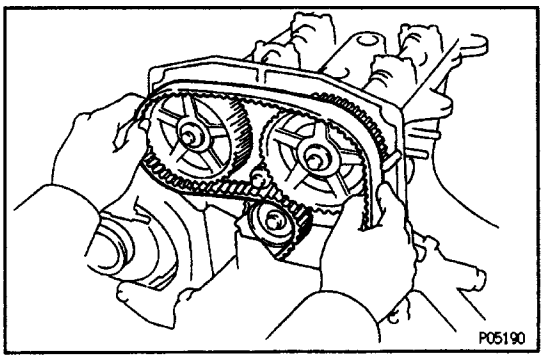

46. DISCONNECT TIMING BELT FROM CAMSHAFT TIMING PULLEYS

(See 11,13,16 to 18 and 23 to 26 under Timing Belt Removal)

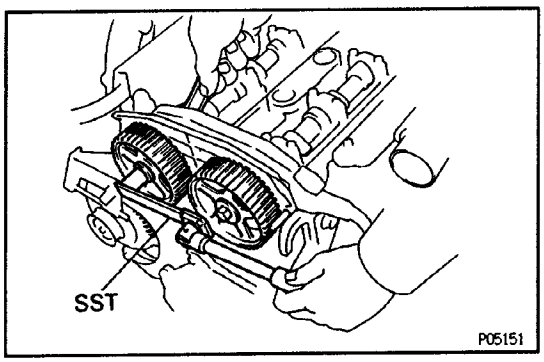

47. REMOVE CAMSHAFT TIMING PULLEYS

(a) Hold the hexagon wrench head portion of the cam–shaft with a wrench, and loosen the pulley bolt.
HINT (Intake camshaft timing pulley): Use SST.
SST 09249–63010

(b) Remove the bolt, timing pulley and pin. Remove the two timing pulleys.
HINT: Arrange the intake and exhaust timing pulleys.

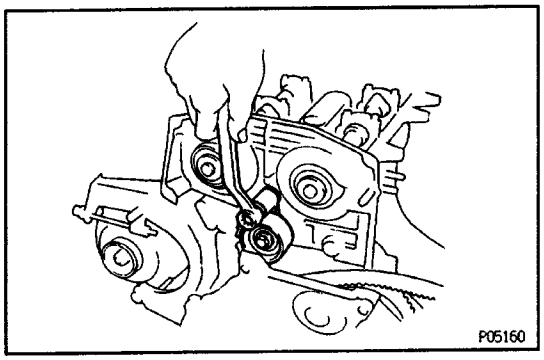

48. REMOVE NO.1 IDLER PULLEY

Remove the pivot bolt, pulley and plate washer.

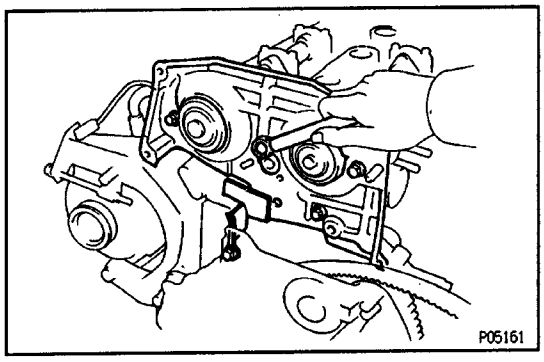

49. REMOVE NO.3 TIMING BELT COVER

Remove the five bolts and timing belt cover.

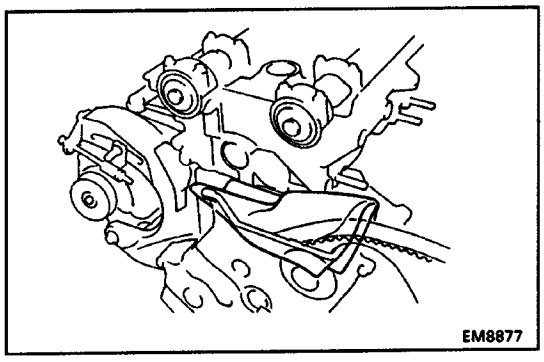

HINT:

- Support the timing belt, so that the meshing of the crankshaft timing pulley and timing belt does not shift.
- Be careful not to drop anything inside the timing belt cover.
- Do not allow the timing belt to come into contact with oil, water or dust.

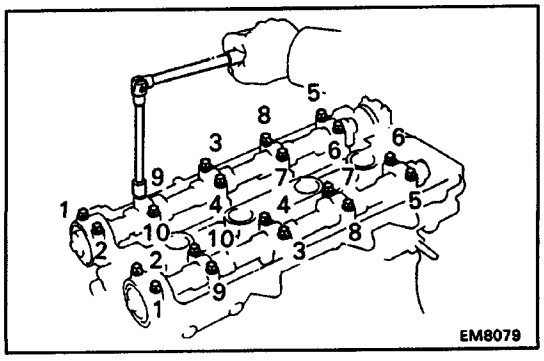

50. REMOVE CAMSHAFTS

Uniformly loosen and remove the tem bearing cap bolts in several passes, in the sequence shown, and remove the five bearing caps, oil seal and camshaft.
Remove the intake and exhaust camshafts.

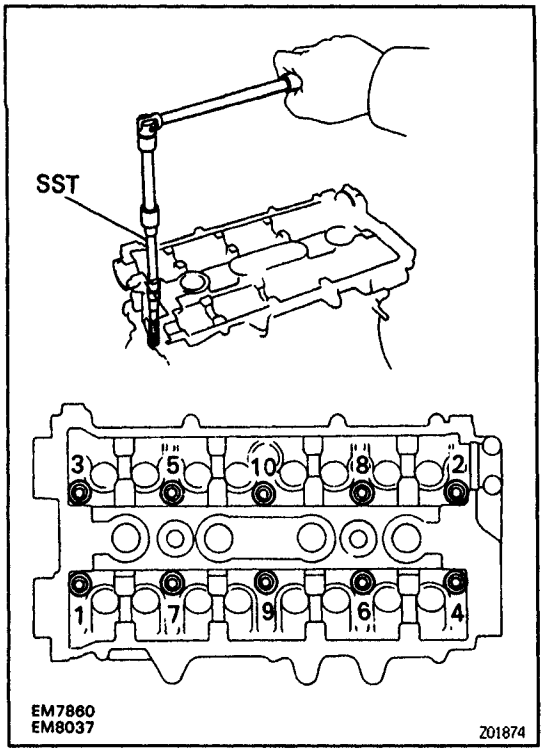

51. REMOVE CYLINDER HEAD

(a) Using SST, uniformly loosen and remove the ten cyl–inder head bolts in several passes, in the sequence shown.

SST 09043 – 38100

HINT: Cylinder head warpage or cracking could result from removing in the incorrect order.

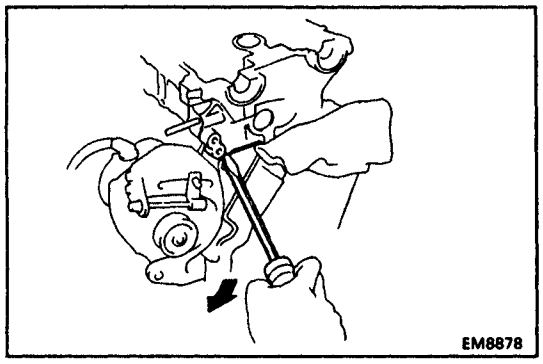

(b) Lift the cylinder head from the dowels on the cylinder block, and place the cylinder head on wooden blocks on a bench.

HINT: If the cylinder head is difficult to lift off, pry between the cylinder head and cylinder block with a screwdriver.

NOTICE: Be careful not to damage the contact surfaces of the cylinder head and cylinder block.

E80WE–01

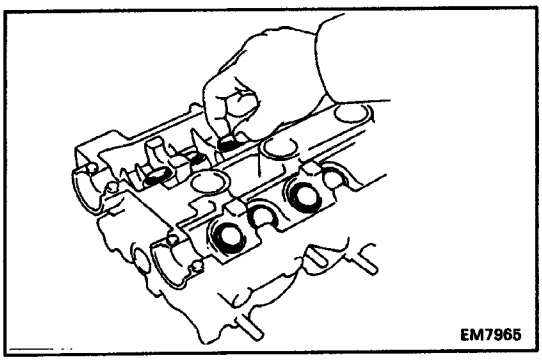

CYLINDER HEAD DISASSEMBLY
(See Components for Removal and Installation)
1. REMOVE VALVE LIFTERS AND SHIMS

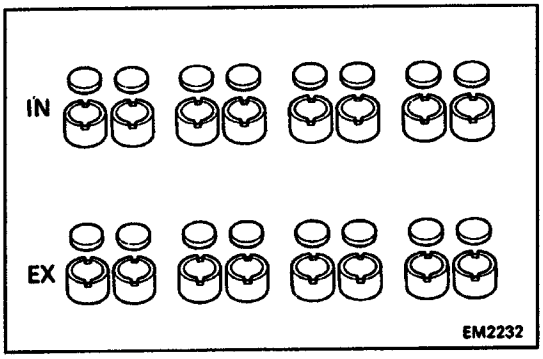

HINT: Arrange the valve lifters and shims in correct order.

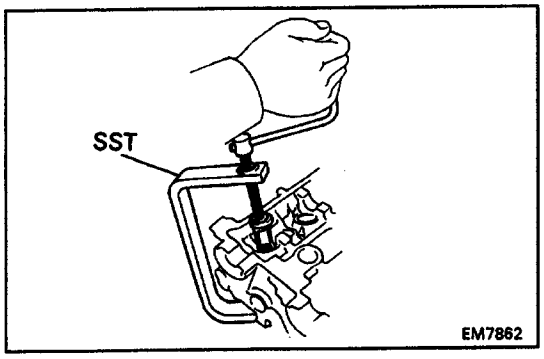

2. REMOVE VALVES

(a) Using SST, compress the valve spring and remove the two keepers.
SST 09202–70010

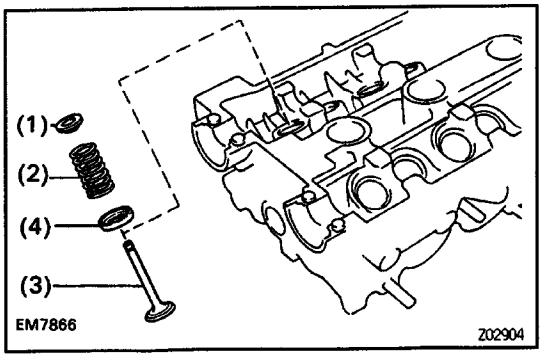

(b) Remove the following parts:
(1) Spring retainer
(2) Valve spring
(3) Valve
(4) Spring seat

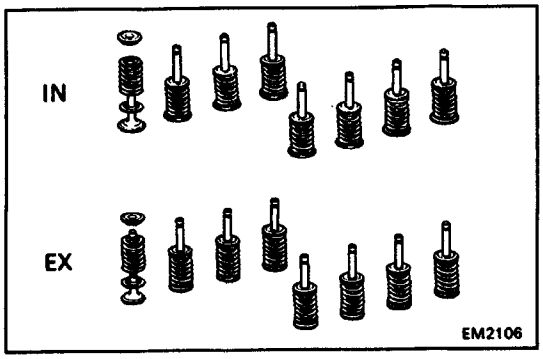

HINT: Arrange the valves, valve springs, spring seats and spring retainers incorrect order.

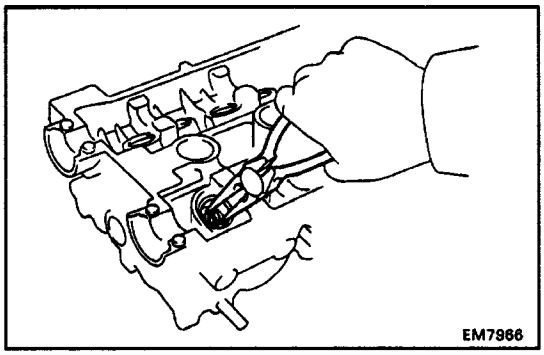

(c) Using needle –nose pliers, remove the oil seal.

EG0WF–01

CYLINDER HEAD COMPONENTS INSPECTION AND REPAIR

1. CLEAN TOP SURFACES OF PISTONS AND CYLIN– DER BLOCK

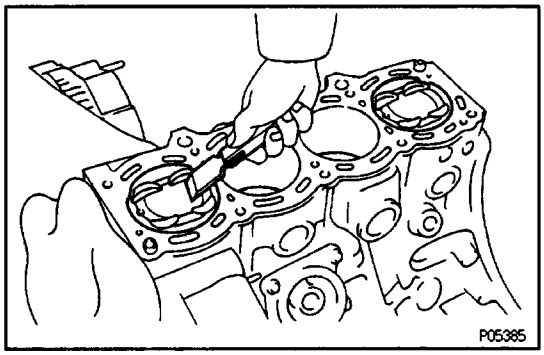

(a) Turn the crankshaft, and bring each piston to top dead center (TDC). Using a gasket scraper, remove all the carbon from the piston top surface.

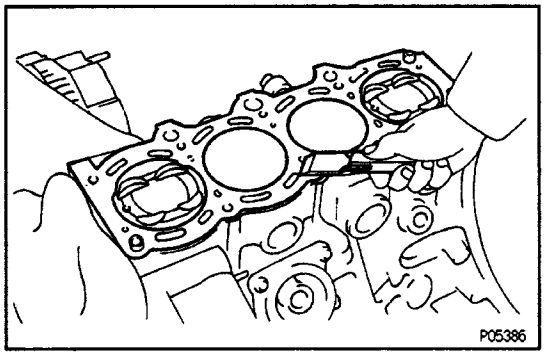

(b) Using a gasket scraper, remove all the gasket material from the cylinder block surface.

(c) Using compressed air, blow carbon and oil from the bolt holes.

CAUTION: Protect your eyes when using high – com– pressed air.

2. CLEAN CYLINDER HEAD

A. Remove gasket material

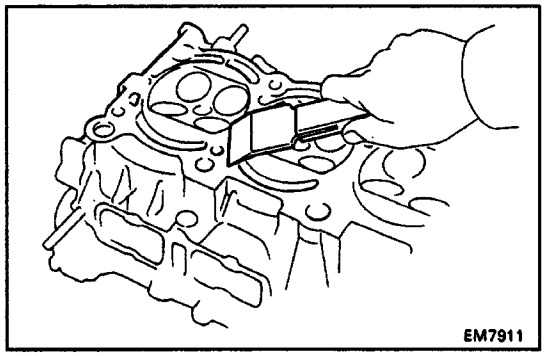

Using a gasket scraper, remove all the gasket material from the cylinder block contact surface.

NOTICE: Be careful not to scratch the cylinder block contact surface.

B. Clean combustion chambers

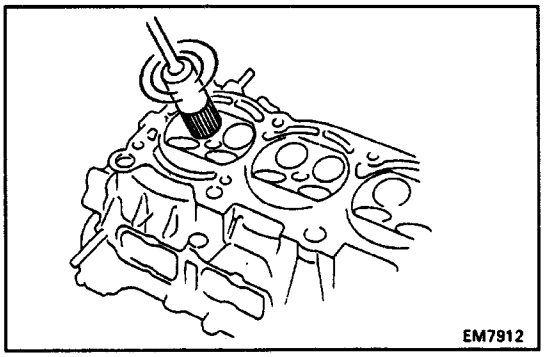

Using a wire brush, remove all the carbon from the combustion chambers.

NOTICE: Be careful not to scratch the cylinder block contact surface.

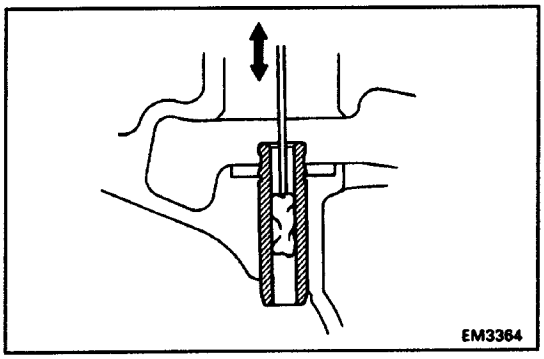

C. Clean valve guide bushings

Using a valve guide bushing brush and solvent, clean all the guide bushings.

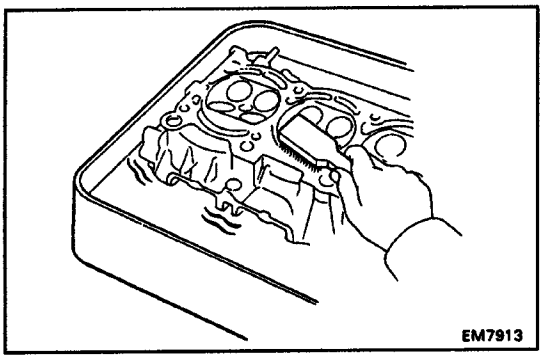

D. Clean cylinder head

Using a soft brush and solvent, thoroughly clean the cylinder head.

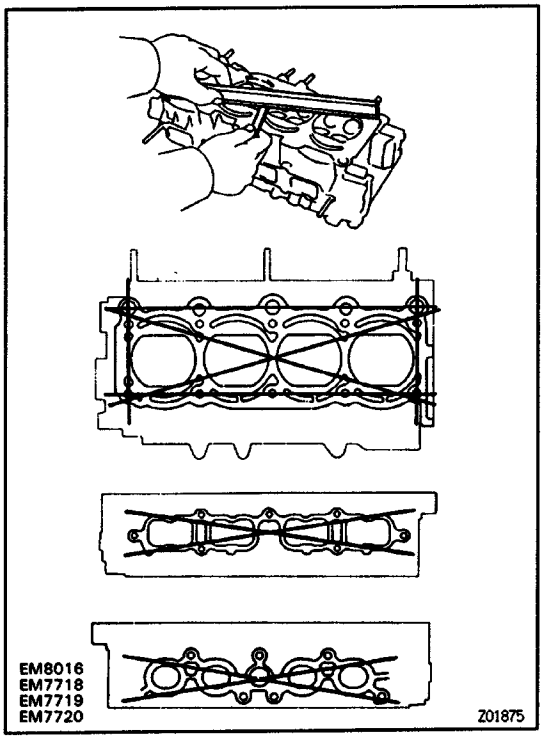

3. INSPECT CYLINDER HEAD

A. Inspect for flatness

Using precision straight edge and feeler gauge, measure the surfaces contacting the cylinder block, T–VIS valve and the manifold for warpage.

Maximum warpage:

Cylinder block side

0.20 mm (0.0079 in.)

T – VIS valve side

0.20 mm (0.0079 in.)

Exhaust manifold side

0.30 mm (0.0118 in.)

If warpage is greater than maximum, replace the cylinder head.

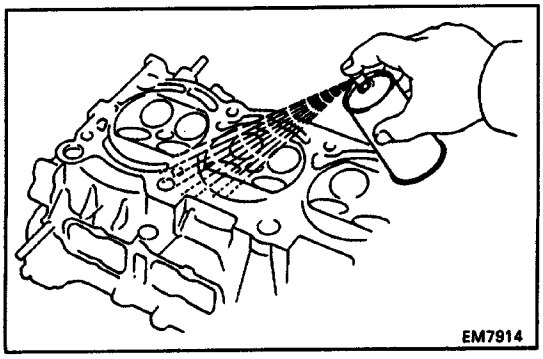

B. Inspect for cracks

Using a dye penetrant, check the combustion chamber, intake ports, exhaust ports and cylinder block surface for cracks.

If cracked, replace the cylinder head.

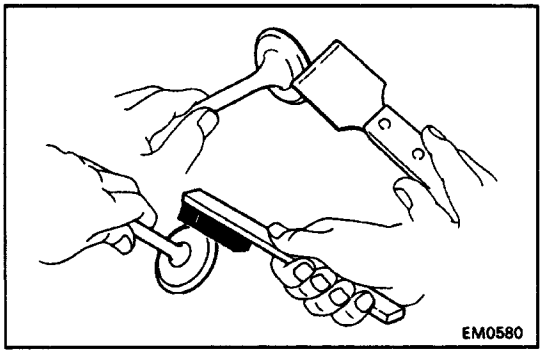

4. CLEAN VALVES

(a) Using a gasket scraper, chip off any carbon from the valve head.

(b) Using a wire brush, thoroughly clean the valve.

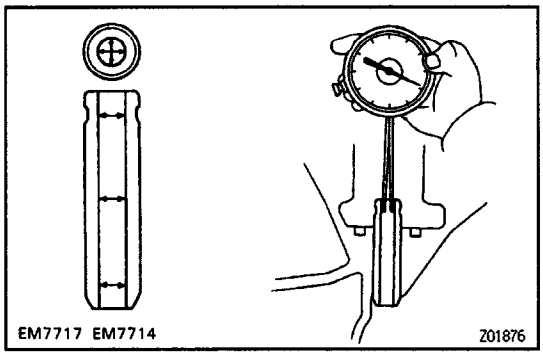

5. INSPECT VALVE STEMS AND GUIDE BUSHINGS

(a) Using a caliper gauge, measure the inside diameter of the guide bushing.

Bushing inside diameter:
6.000–6.018 mm (0.2362–0.2369 in.)

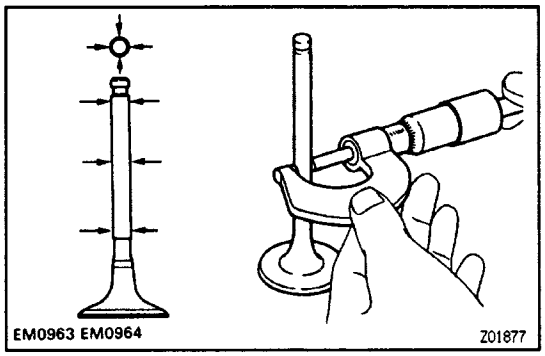

(b) Using a micrometer, measure the diameter of the valve stem.

Valve stem diameter:
Intake
5.960 – 5.975 mm (0.2346 – 0.2352 in.)
Exhaust
5.955 – 5.970 mm (0.2344 – 0.2350 in.)

(c) Subtract the valve stem diameter measurement from the guide bushing inside diameter measurement.

Standard oil clearance:
Intake
0.025 – 0.058 mm (0.0010 – 0.0023 in.)
Exhaust
0.030 – 0.063 mm (0.0012 – 0.0025 in.)
Maximum oil clearance:
Intake
0.08 mm (0.0031 in.)
Exhaust
0.10 mm (0.0039 in.)

If the clearance is greater than maximum, replace the valve and guide bushing.

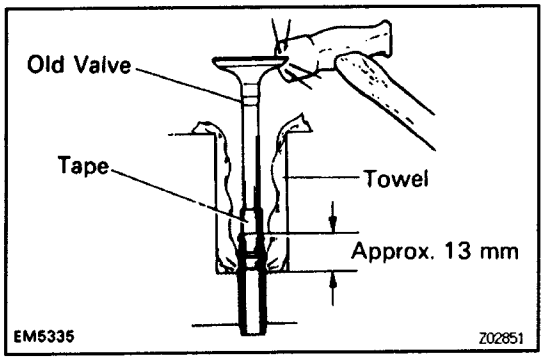

6. IF NECESSARY, REPLACE VALVE GUIDE BUSHINGS

(a) (w/ Snap Ring)

Insert an old valve wrapped with tape into the valve guide bushing, and break off the valve guide bushing by hitting it with a hammer. Remove the snap ring.

HINT: Wrap the tape approx. 13 mm (0.51 in.) from the valve stem end.

NOTICE: Be careful not to damage the valve lifter hole.

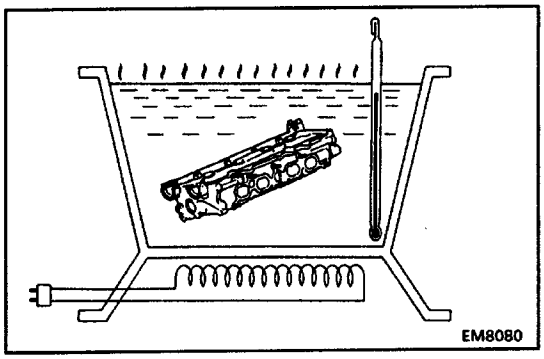

(b) Gradually heat the cylinder head to 80–100˚C (176–212˚ F).

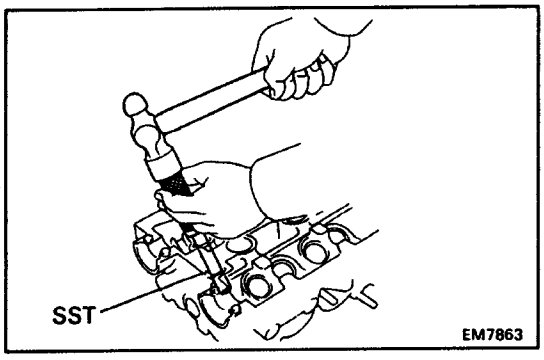

(c) Using SST and a hammer, tap out the guide bushing.
SST 09201 – 70010

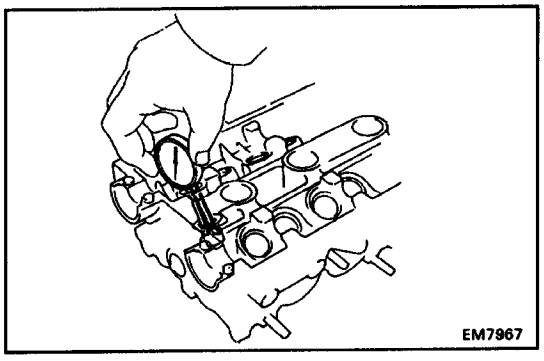

(d) Using a caliper gauge, measure the bushing bore diameter of the cylinder head.

Both intake and exhaust

Bushing bore diameter mm (in.)	Bushing size
10.988 – 11.006 (0.432fi – 0.4333)	Use STD
11.038 – 11.056 (0.4346 – 0.4353)	Use 0/S 0.05

(e) Select a new guide bushing (STD or O/S 0.05).

If the bushing bore diameter of the cylinder head is greater than 11.006 mm (0.4333 in.), machine the bushing bore to the following dimension:

11.038 – 11.056 mm (0.4346 – 0.4353 in.)

If the bushing bore diameter of the cylinder head is greater than 11.056 mm (0.4353 in.), replace the cylinder head.

V00866

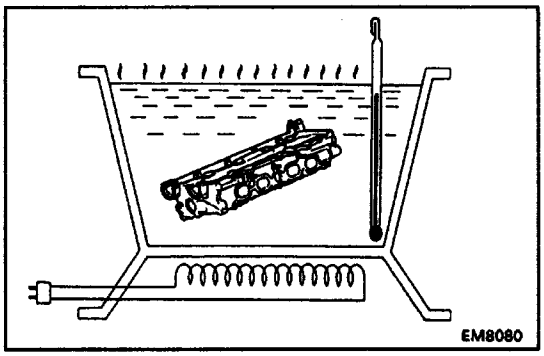

(f) Gradually heat the cylinder head to 80–100˚C (176–212” F).

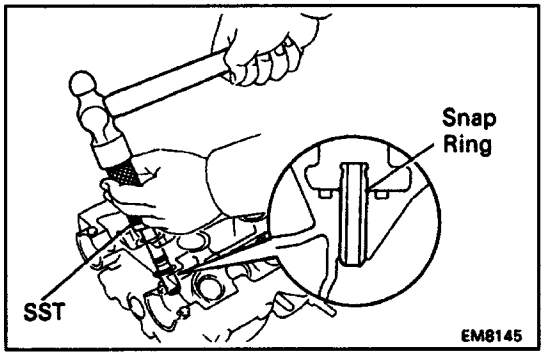

(g) Using SST and a hammer, tap in a new guide bushing until the snap ring makes contact with the cylinder head.
SST 09201– 70010

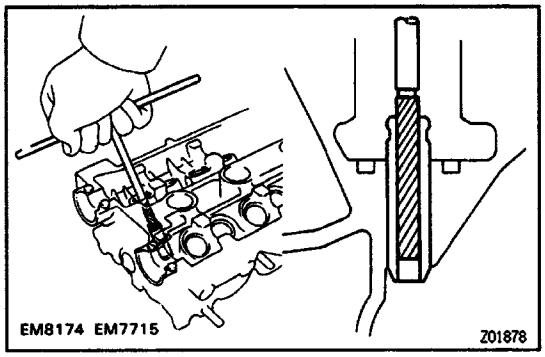

(h) Using a sharp 6 mm reamer, ream the guide bushing to obtain the specified clearance (see step 5 above) between the guide bushing and valve stem.

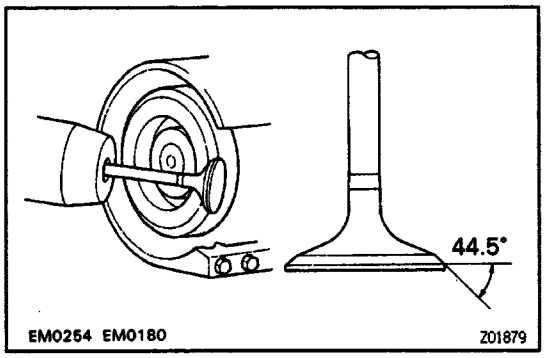

7. INSPECT AND GRIND VALVES

(a) Grind the valve enough to remove pits and carbon.

(b) Check that the valve is ground to the correct valve face angle.

Valve face angle:

44.5˚

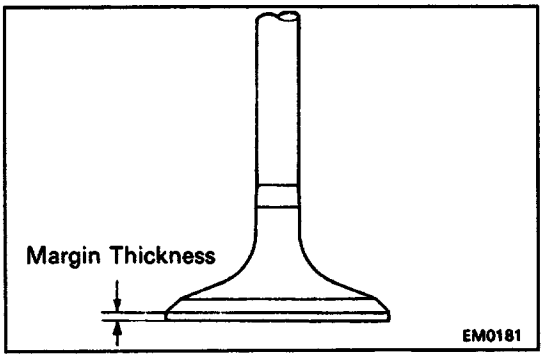

(c) Check the valve head margin thickness.

Standard margin thickness:

0.8 – 1.2 mm (0.031 – 0.047 in.)

Minimum margin thickness:

0.5 mm (0.020 in.)

If the margin thickness is less than minimum, replace the valve.

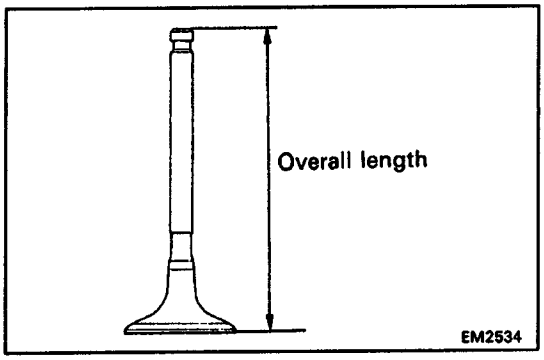

(d) Check the valve overall length.

Standard overall length:

Intake

105.50 mm (4.1535 in.)

Exhaust

99.55 mm (3.9193 in.)

Minimum overall length:

Intake

104.80 mm (4.1260 in.)

Exhaust

98.85 mm (3.8917 in.)

If the overall length is less than minimum, replace the valve.

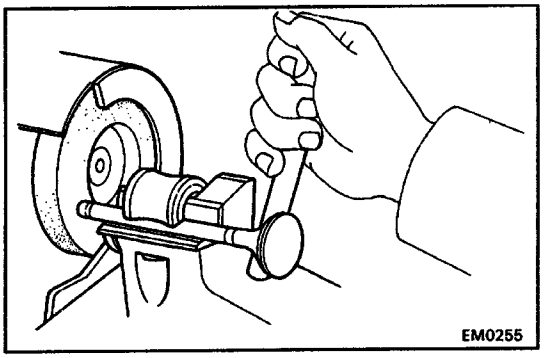

(e) Check the surface of the valve stem tip for wear.

If the valve stem tip is worn, resurface the tip with a grinder or replace the valve.

NOTICE: Do not grind off more than minimum.

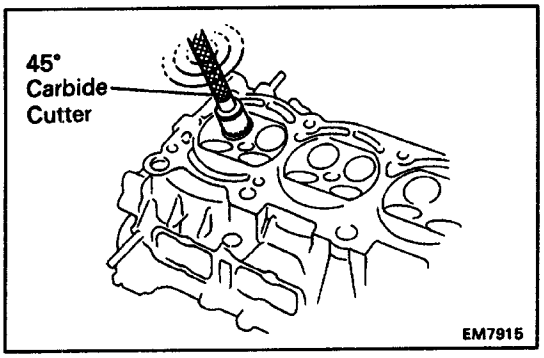

8. INSPECT AND CLEAN VALVE SEATS

(a) Using a 45° carbide cutter, resurface the valve seats.

Remove only enough metal to clean the seats.

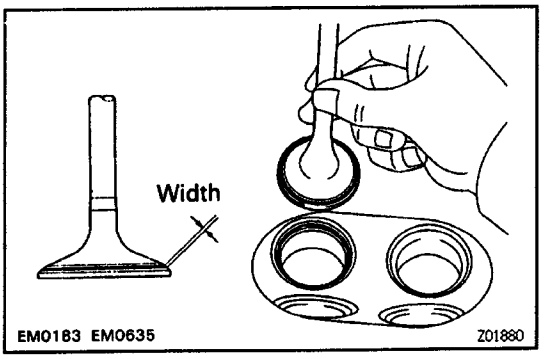

(b) Check the valve seating position.

Apply a light coat of Prussian blue (or white lead) to the valve face. Lightly press the valve against the seat. Do not rotate valve.

(c) Check the valve face and seat for the following:

- If blue appears 360° around the face, the valve is concentric. If not, replace the valve.
- If blue appears 380° around the valve seat, the guide and face are concentric. If not, resurface the seat.
- Check that the seat contact is in the middle of the valve face with the following width:

1.0 – 1.4 mm (0.039 – 0.055 in.)

If not, correct the valve seats as follows:

(1) If the seating is too high on the valve face, use 30° and 45° cutters to correct the seat.

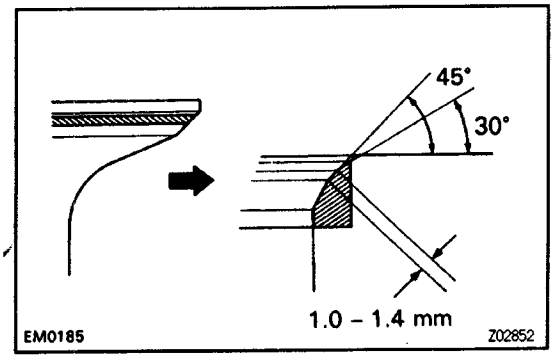

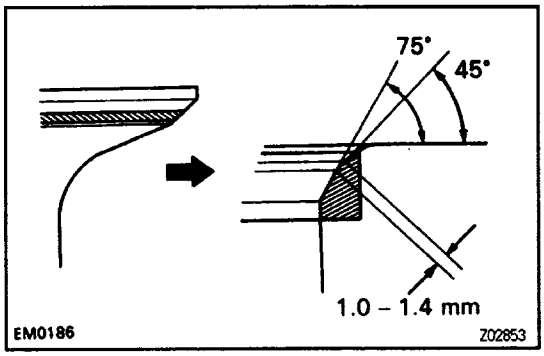

(2) If the seating is too low on the valve face, use 75° and 45° cutters to correct the seat.

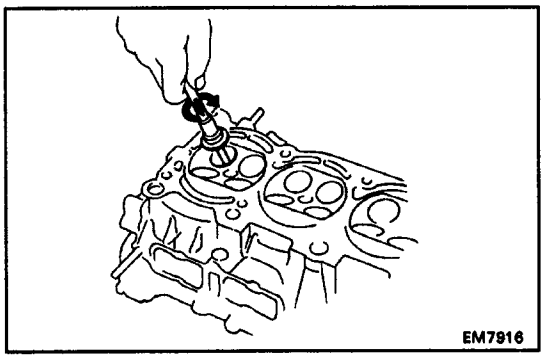

(d) Hand–lap the valve and valve seat with an abrasive compound.
(e) After hand–lapping, clean the valve and valve seat.

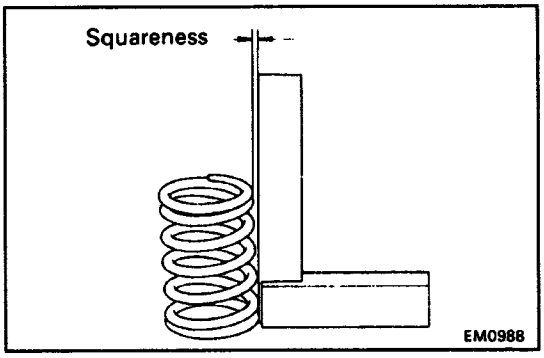

9. INSPECT VALVE SPRINGS

(a) Using a steel square, measure the squareness of the valve spring.

Maximum squareness:

2.0 mm (0.079 in.)

If the deviation is greater than maximum, replace the valve spring.

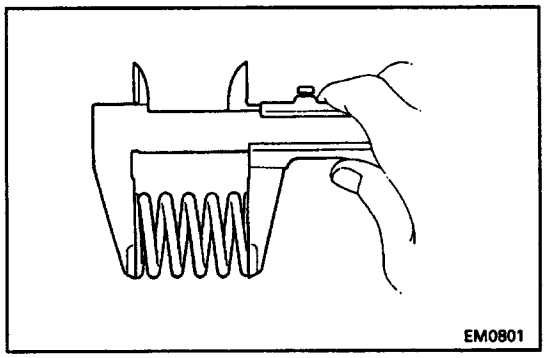

(b) Using a vernier caliper, measure the free length of the valve spring.

Free length: .

44.43 mm (1.7492 in.)

If the free length is not as specified, replace the valve spring.

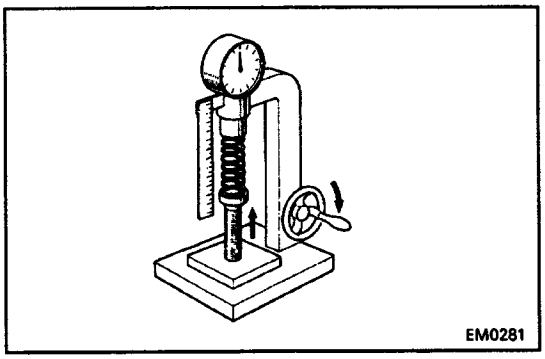

(c) Using a spring tester, measure the tension of the valve spring at the specified installed length.

Installed tension:

201 – 236 N (20.5 – 24.1 kgf, 45.2 – 53.1 lbf)

at 34.4 mm (1.354 in.)

If the installed tension is not as specified, replace the valve spring.

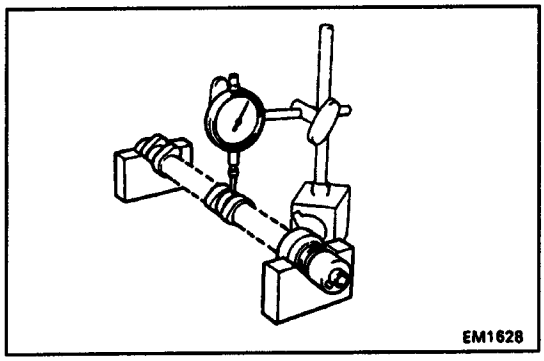

10. INSPECT CAMSHAFTS AND BEARINGS

A. Inspect camshaft for runout

(a) Place the camshaft on V – blocks.

(b) Using a dial indicator, measure the circle runout at the center journal.

Maximum circle runout:

0.06 mm 10.0024 in.)

If the circle runout is greater than maximum, replace the camshaft.

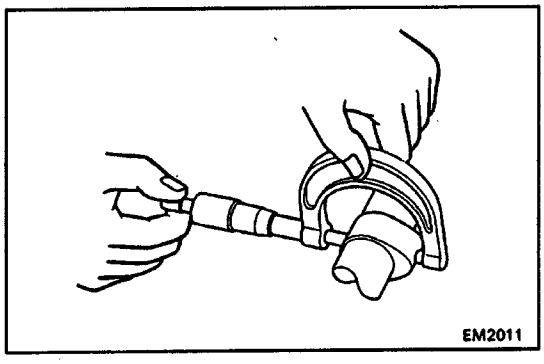

B. Inspect cam lobes

Using a micrometer, measure the cam lobe height.

Standard cam lobe height:

41.010 – 41.110 mm (1.6146 – 1.6185 in.)

Minimum cam lobe height:

39.90 mm, (1.5709 in.)

If the cam lobe height is less than minimum, replace the camshaft.

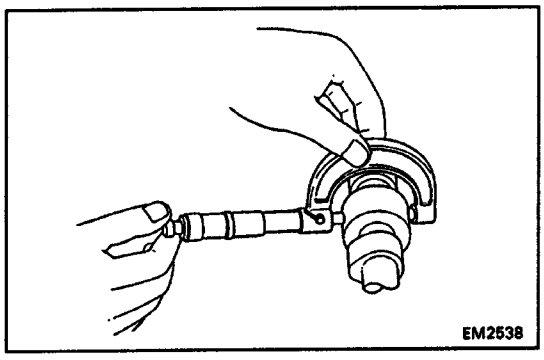

C. Inspect camshaft journals

Using a micrometer, measure the journal diameter.

Journal diameter:

26.959 – 26.975 mm (1.0614 – 1.0620 in.)

If the journal diameter is not as specified, check the oil clearance.

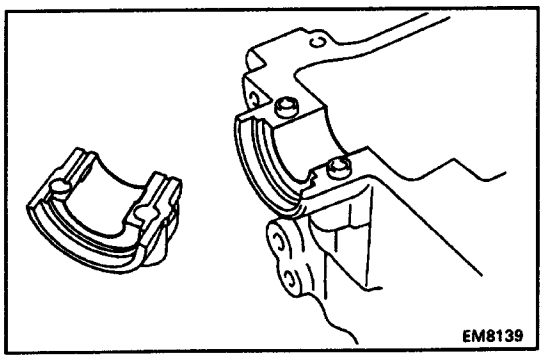

D. Inspect camshaft bearings

Check that bearings for flaking and scoring.

If the bearings are damaged, replace the bearing caps and cylinder head as a set.

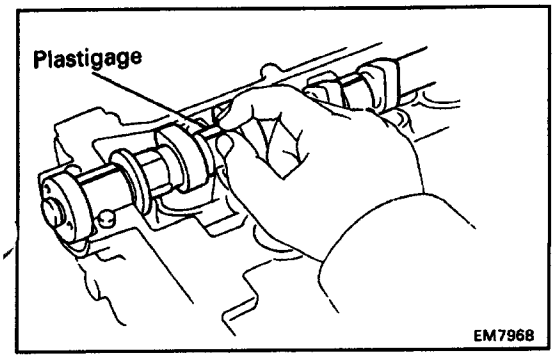

E. Inspect camshaft journal oil clearance

(a) Clean the bearing caps and camshaft journals.

(b) Place the camshafts on the cylinder head.

(c) Lay a strip of Plastigage across each of the camshaft journals.

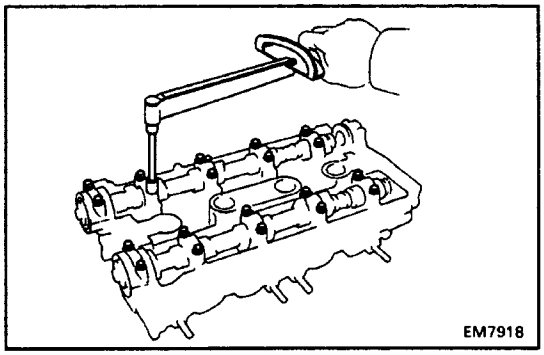

(d) Install the bearing caps.
(See step 2 in Cylinder Head Installation)
Torque: 19 N–m (190 kgf–cm, 14 ft–lbf)
NOTICE: Do not turn the camshaft.

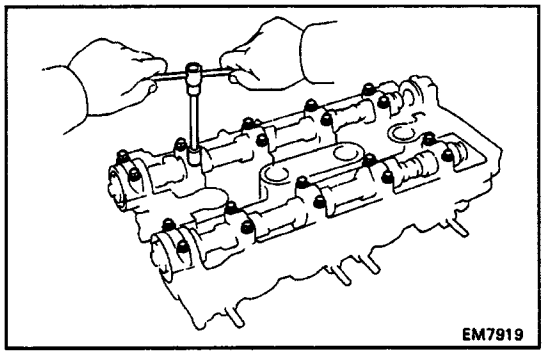

(e) Remove the bearing caps.

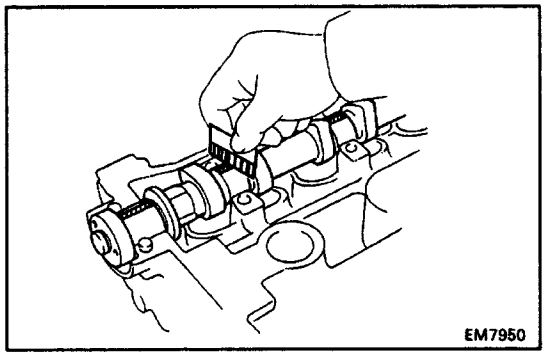

(f) Measure the Plastigage at its widest point.
Standard oil clearance:
0.025 – 0.062 mm (0.0010 – 0.0024 in.)
Maximum oil clearance:
0.08 mm (0.0031 in.)
If the oil clearance is greater than maximum, replace the camshaft. If necessary, replace the bearing caps and cylinder head as a set.
(g) Completely remove the Plastigage.

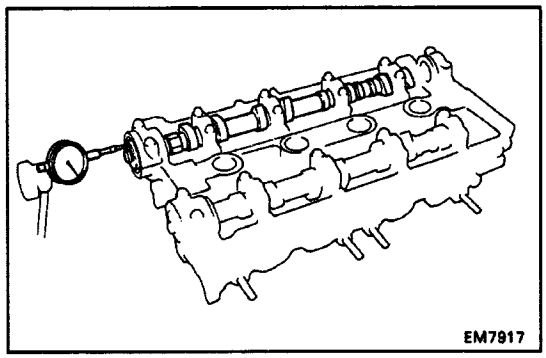

F. Inspect camshaft thrust clearance
(a) Install the camshaft.
(See step 2 in Cylinder Head Installation)
(b) Using a dial indicator, measure the thrust clearance while moving the camshaft back and forth.
Standard thrust clearance:
0.120 – 0.240 mm (0.0047 – 0.0094 in.)
Maximum thrust clearance:
0.30 mm (0.0118 in.)
If the thrust clearance is greater than maximum, re–place the camshaft. If necessary, replace the bearing caps and cylinder head as a set.

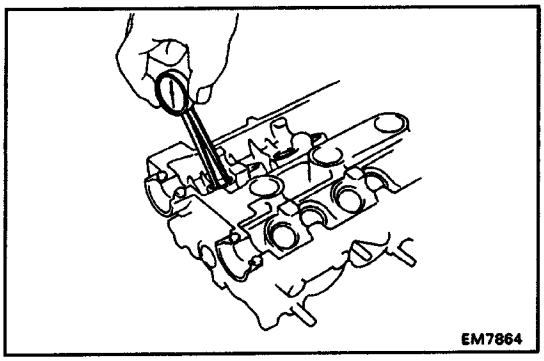

11. INSPECT VALVE LIFTERS AND LIFTER BORES

(a) Using a caliper gauge, measure the lifter bore diame–ter of the clinder head.

Lifter bore diameter:

28.000 – 28.021 mm (1.1024 – 1.1032 in.)

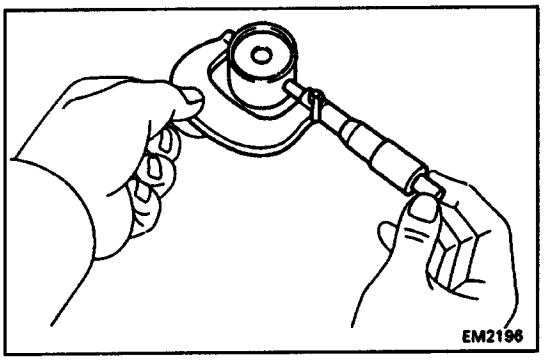

(b) Using a micrometer, measure the lifter diameter.

Lifter diameter:

27.975 – 27.985 mm (1.1014 – 1.1018 in.)

(c) Subtract the lifter diameter measurement from the lifter bore diameter measurement.

Standard oil clearance:

0.015 – 0.046 mm (0.0005 – 0.0018 in.)

Maximum oil clearance:

0.07 mm (0.0028 in.)

If the oil clearance is greater than maximum, replace the lifter. If necessary, replace the cylinder head.

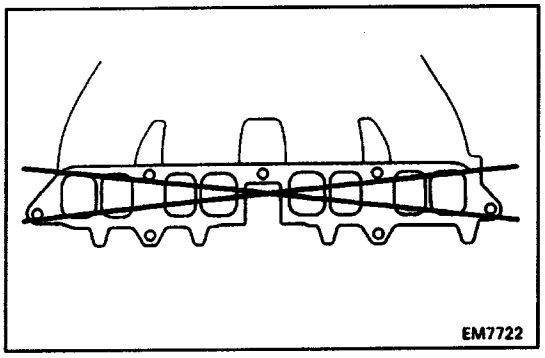

12. INSPECT MANIFOLDS

(intake manifold)

Using precision straight edge and feeler gauge, mea–sure the surface contacting the T – VIS valve for warpage.

Maximum warpage:

0.20 mm (0.0079 in.)

If warpage is greater than maximum, replace the intake manifold.

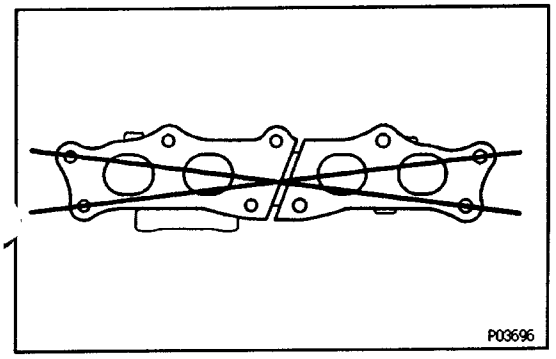

(Exhaust manifold)

Using precision straight edge and feeler– gauge, mea–sure the surface contacting the cylinder head for warpage.

Maximum warpage:

0.20 mm (0.0079 in.)

If warpage is greater than maximum, replace the ex–haust manifold.

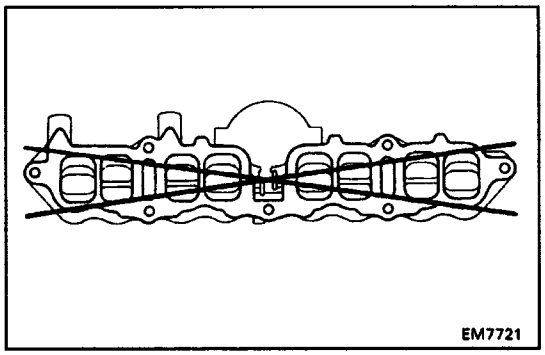

TOYOTA–VARIABLE INDUCTION SYSTEM (T–VIS) COMPONENTS INSPECTION

1. INSPECT T–VIS VALVE

A. Inspect for flantness

Using precision straight edge and feeler gauge, measure the surface contacting the cylinder head and intake manifold for warpage.

Maximum warpage:

0.20 mm (0.0079 in.)

If warpage is greater than maximum, replace the T–VIS valve.

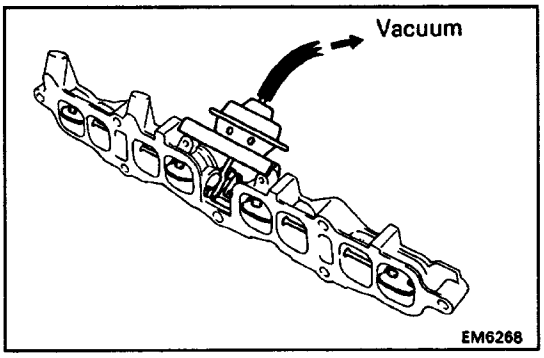

B. Inspect for operation

(a) With 53.3 kPa (400 mmHg, 15.75 in.Hg) of vacuum applied to the actuator, check that the control valve moves smoothly to the fully closed position.

(b) With the vacuum released, check that the control valve fully opens quickly.

If operation is not as specified, replace the T–VIS valve.

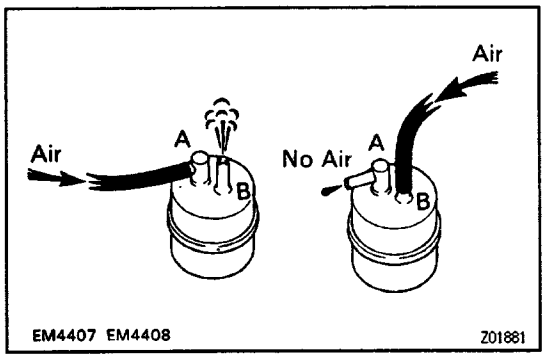

2. INSPECT VACUUM TANK

(a) Check that air flows from port A to port B.

(b) Check that air does not flow from ports B to A.

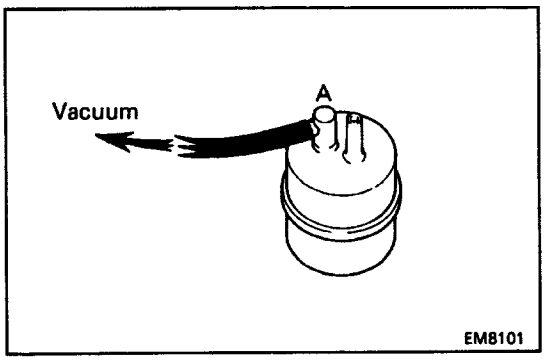

(c) Apply 67.7 kPa (500 mmHg, 19.69 in.Hg) of vacuum to port A, and check that there is no change in vacuum after one minute.

If operation is not as specified, replace the vacuum tank.

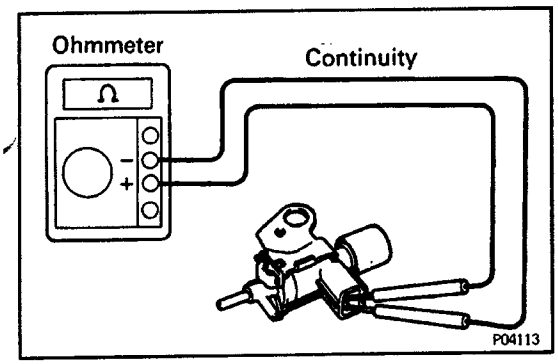

3. INSPECT VSV

A. Inspect VSV for open circuit

Using an ohmmeter, check that there is continuity between the terminals.

Resistance (Cold):

33–39 Ω

If there is no continuity, replace the VSV.

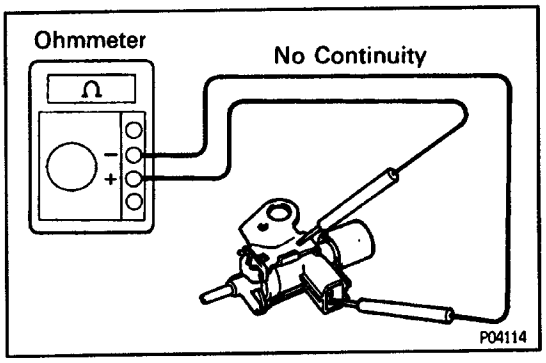

B. Inspect VSV for ground

Using an ohmmeter, check that there is no continuity between each terminal and the body.

If there is continuity, replace the VSV.

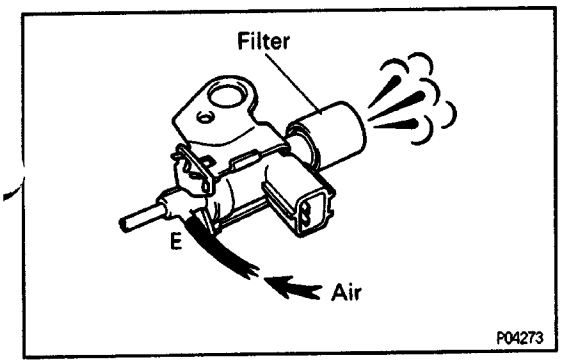

C. Inspect VSV operation

(a) Check that the air flows from port E to the filter.

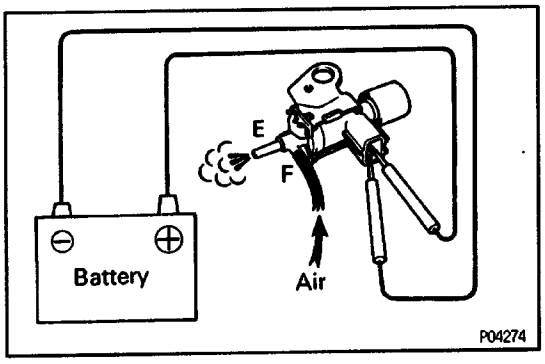

(b) Apply battery voltage across the terminals.

(c) Check that the air flows from port E to port F.

If operation is not as specified, replace the VSV.

CYLINDER HEAD ASSEMBLY

EG0WH–01

(See Components for Removal and Installation)

HINT:

- Thoroughly clean all parts to be assembled.
- Before installing the parts, apply new engine oil to all sliding and rotating surfaces.
- Replace all gaskets and oil seals with new ones.

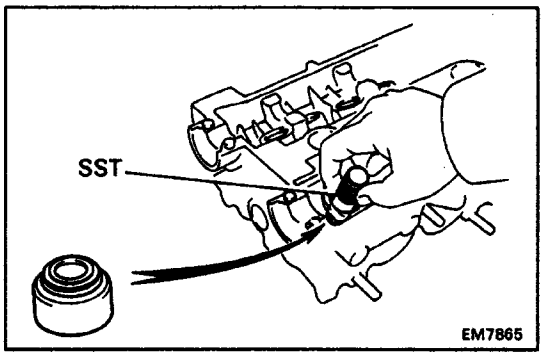

1. INSTALL VALVES

(a) Using SST, push in a new oil seal.

SST 09201–41020

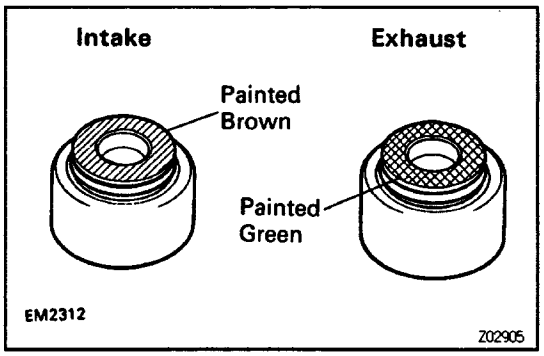

HINT: The intake valve oil seal is brown and the exhaust valve oil seal is green.

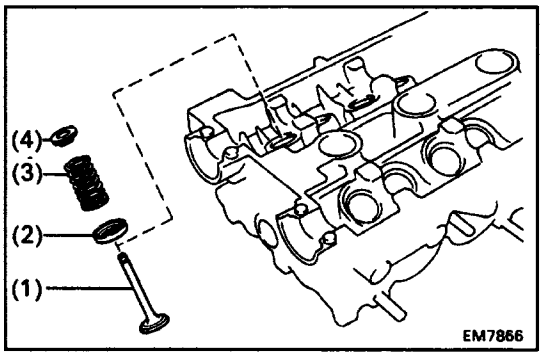

(b) Install the following parts:

(1) Valve
(2) Spring seat
(3) Valve spring
(4) Spring retainer

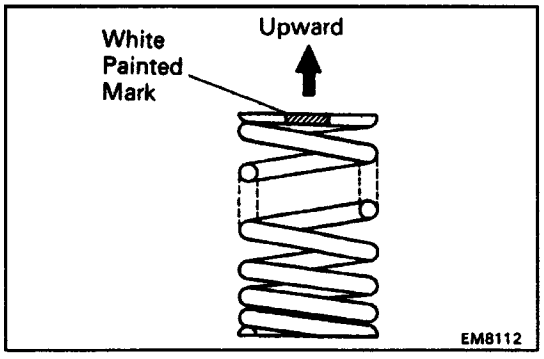

HINT: Install the valve spring, facing the white painted
mark upward.

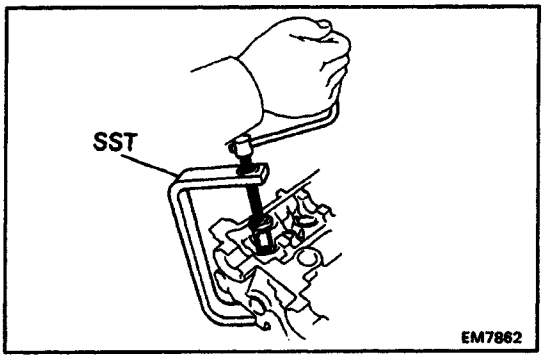

(c) Using SST, compress the valve spring and place the two keepers around the valve stem.
SST 09202–70010

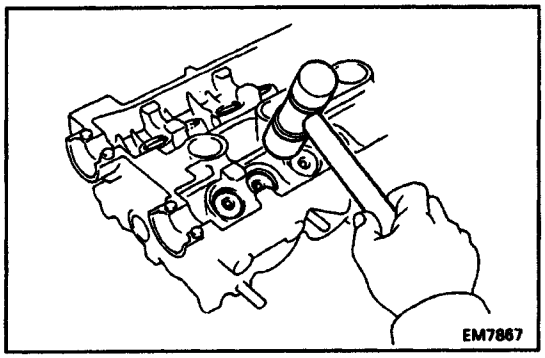

(d) Using a plastic–faced hammer, lightly tap the valve stern tip to assure proper fit.

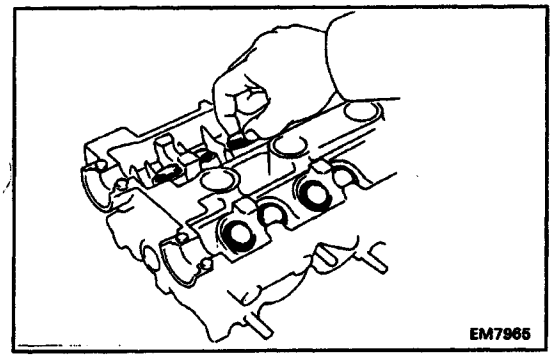

2. INSTALL VALVE LIFTERS AND SHIMS

(a) Install the valve lifter and shim.

(b) Check that the valve lifter rotates smoothly by hand.

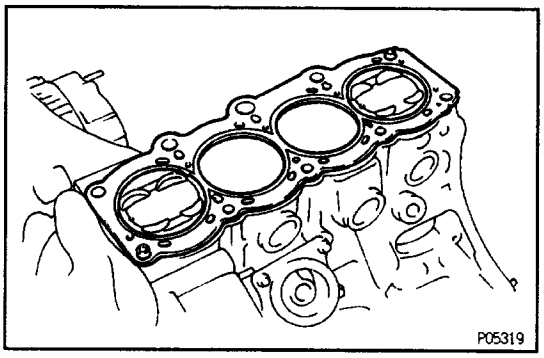

CYLINDER HEAD INSTALLATION

EG0WJ–01

(See Components for Removal and Installation)

1. INSTALL CYLINDER HEAD

A. Place cylinder head on cylinder block

(a) Place a new cylinder head gasket in position on the cylinder block.

NOTICE: Be careful of the installation direction.

(b) Place the cylinder head in position on the cylinder head gasket.

B. Install cylinder head bolts

HINT:

- The cylinder head bolts are tightened in two progressive steps (steps (b) and (d)).
- If any cylinder head bolt is broken or deformed, replace it.

(a) Apply a light coat of engine oil on the threads and under the heads of the cylinder head bolts.

(b) Using SST, install and uniformly tighten the ten cyl–inder head bolts in several passes, in the sequence shown.

SST 09043 – 38100

Torque: 49 N–m (500 kgf–cm, 36 ft–lbf)

If any one of the cylinder head bolts does not meet the torque specification, replace the cylinder head bolt.

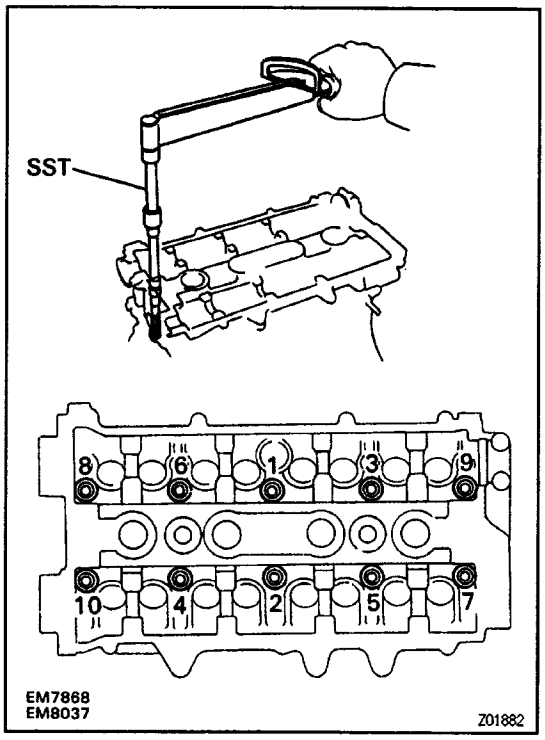

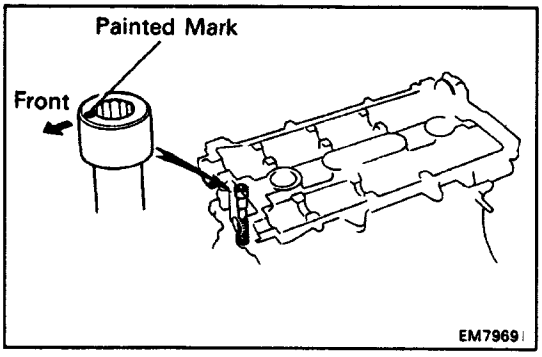

(c) Mark the front of the cylinder head bolt head with paint.

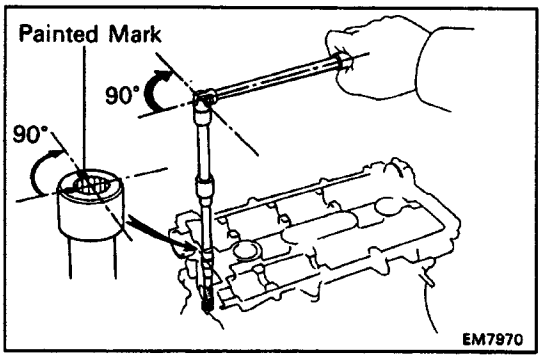

(d) Retighten the cylinder head bolts 90° in the numerical order shown.

(e) Check that the painted mark is now at a 90° angle to front.

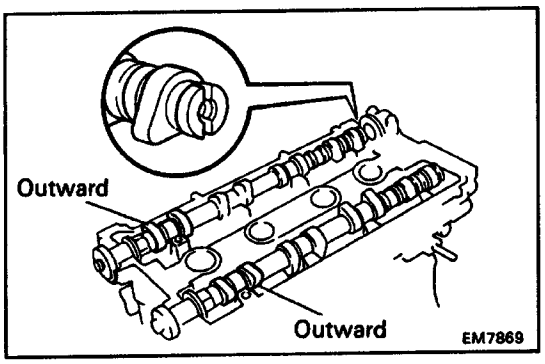

2. INSTALL CAMSHAFTS

(a) Place the camshaft on the cylinder head with the No. 1 cam lobe facing outward as shown.

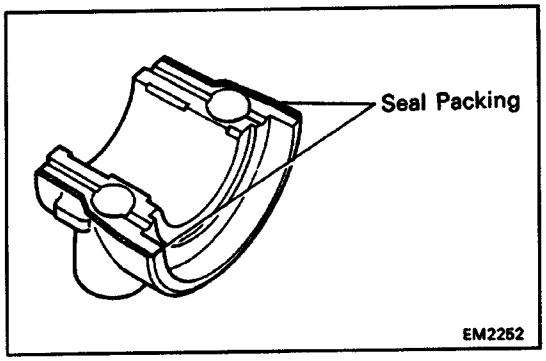

(b) Apply seal packing to the No. 1 bearing cap as shown.
Seal packing: Part No. 08826–00080 or equivalent

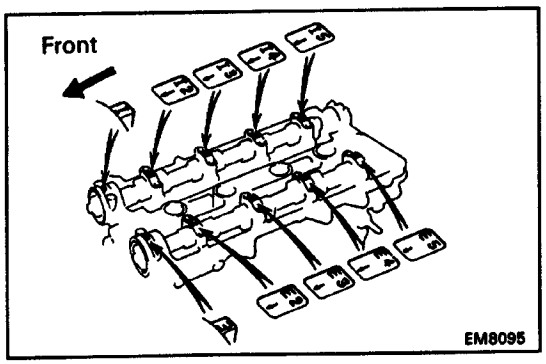

(c) Install the bearing caps in their proper locations.
HINT: Each bearing cap has a number and front mark.

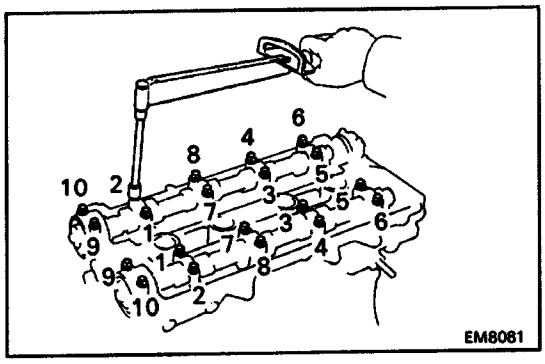

(d) Apply a light coat of engine oil on the threads and under the heads of the bearing cap bolts.

(e) Install and uniformly tighten the ten bearing cap bolts on one side in several passes, in the sequence shown.
Torque: 19 N–m (190 kgf–cm, 14 ft–lbf)

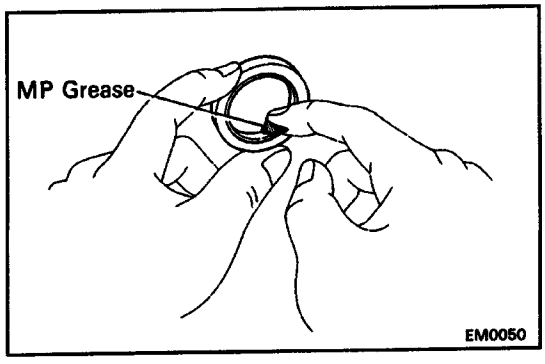

(f) Apply MP grease to a new oil seal lip.

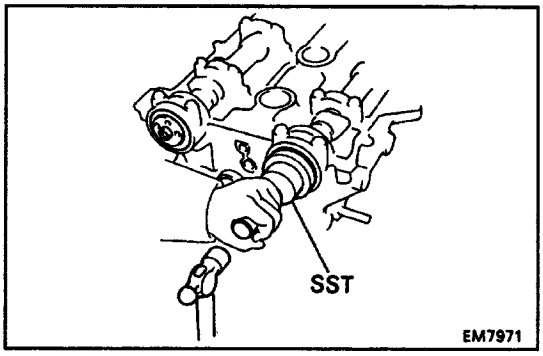

(9) Using SST, tap in the two camshaft oil seals.
SST 09223–50010

3. ADJUST VALVE CLEARANCE (See Tune–Up)

Turn the camshaft and position the cam lobe upward, check and adjust the valve clearance.

Valve clearance (Cold):

Intake

0.15 – 0.25 mm (0.006 – 0.010 in.)

Exhaust

0.28 – 0.38 mm (0.011 – 0.015 in.)

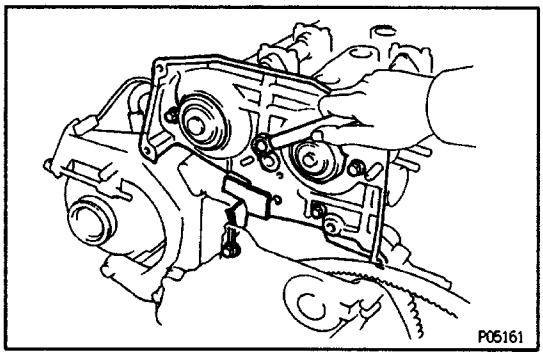

4. INSTALL NO–3 TIMING BELT COVER

Install the No.3 belt cover with the five bolts.
Torque: 8.8 N–m (90 kgf–cm, 78 ft–lbf)

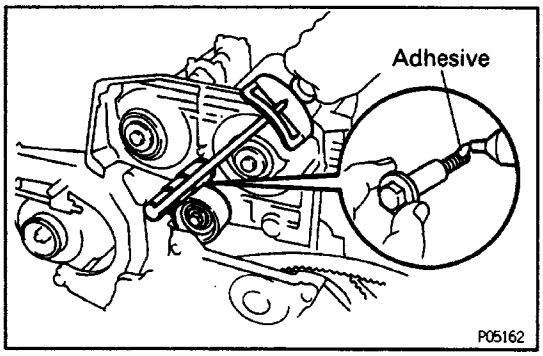

5. INSTALL NO.1 IDLER PULLEY

(a) Apply adhesive two or three threads of the pivot bolt.

Adhesive:

Part No. 08833–00080,THREE BOND 1344,
LOCTITE 242 or equivalent

(b) Install the plate washer and pulley with the pivot bolt.

Torque: 52 N–m (530 kgf–cm, 38 ft–lbf)

(c) Check that the idler pulley moves smoothly.

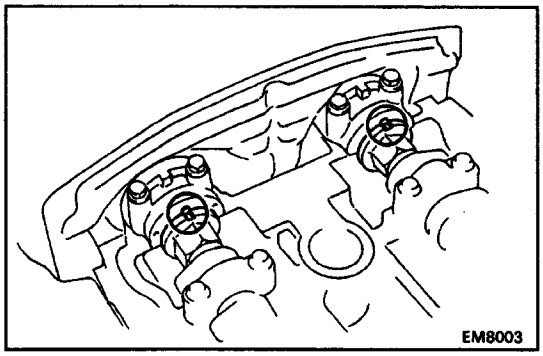

6. INSTALL CAMSHAFT TIMING PULLEY

(a) Using a wrench, turn and align the groove of the camshaft with the dot mark of the No.1 camshaft bearing cap.

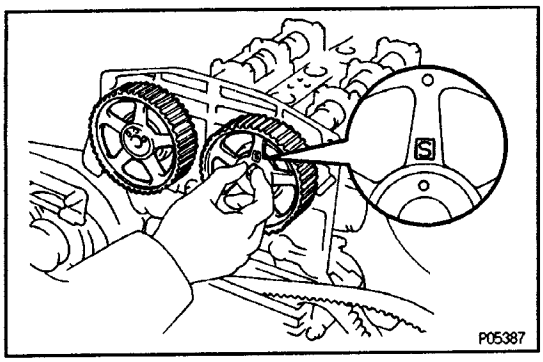

(b) Slide the timing pulley onto the camshaft facing mark "S" upward.
(c) Align the pin holes of the camshaft and timing pulley, and insert the knock pin.

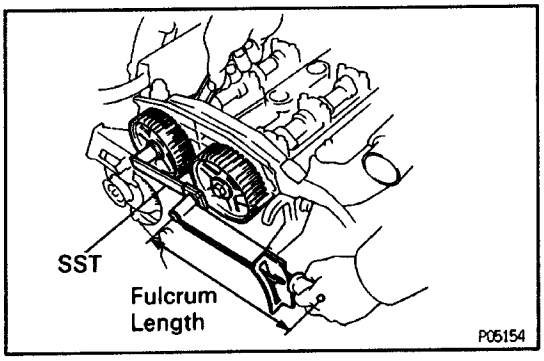

(d) Hold the hexagon wrench portion of the camshaft with a wrench and tighten the bolts.
Torque:
59 N–m (600 kgf–cm, 43 ft–lbf)
41 N–m (420 kgf–cm, 30 ft–lbf) for SST
HINT (Intake camshaft timing pulley):
- Use SST.

SST 09249–63010
- Use a torque wrench with a fulcrum length of 340 mm (13.39 in.).

7. CONNECT TIMING BELT TO CAMSHAFT TIMING PULLEYS (See steps 10 to 16, 21 to 23 and 27 in Timing Belt Installation)

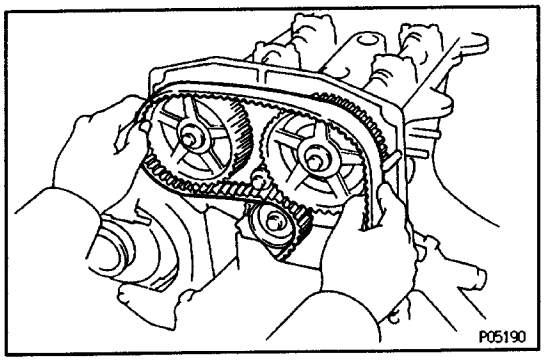

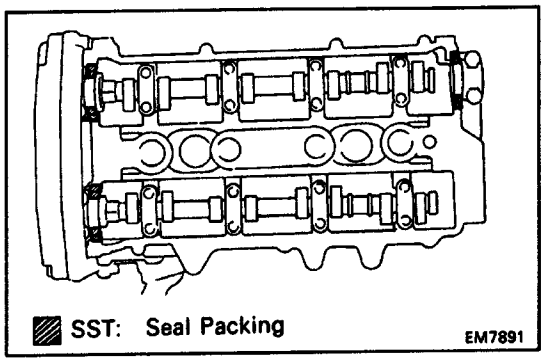

8. INSTALL CYLINDER HEAD COVER
(a) Apply seal packing to the cylinder head as shown in the illustration.
Seal packing:
Part No. 08826–00080 or equivalent

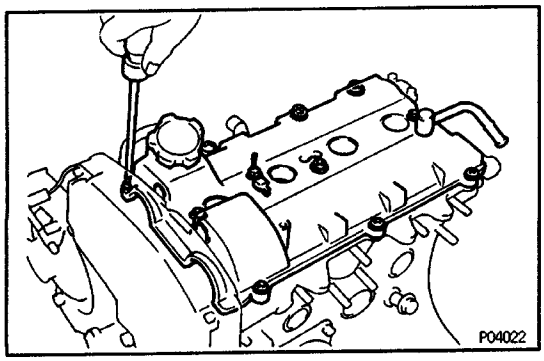

(b) Install the two gaskets to the head cover.
(c) Install the head cover with the twelve seal washers and screws. Uniformly tighten the screw in several passes.
Torque: 2.5 N–m (25 kgf–cm, 21 in.¿lbf)

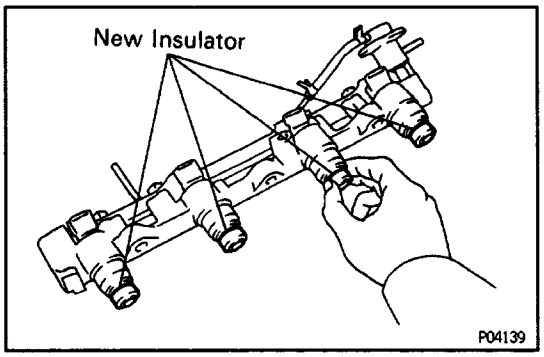

9. INSTALL DELIVERY PIPE ASSEMBLY

(a) Install four new insulators to the delivery pipe.

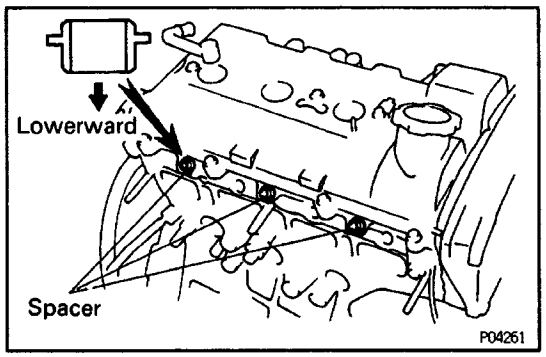

(b) Install the three spacers to the cylinder head.

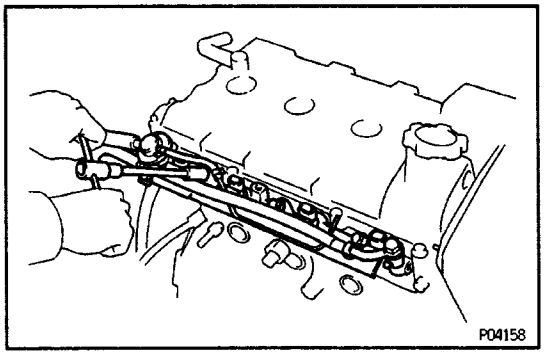

(c) Attach the delivery pipe assembly to the cylinder head.

(d) Install the delivery pipe assembly with the three bolts.

Torque: 19 N–m (195 kgf–cm, 14 ft–lbf)

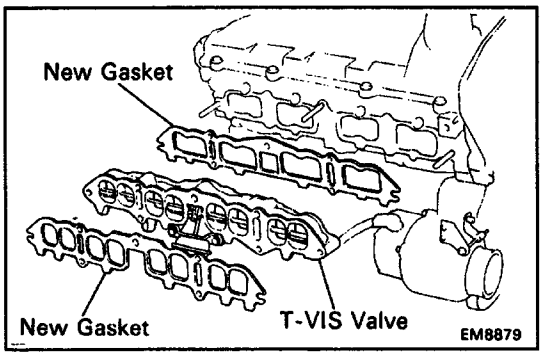

10. INSTALL T–VIS VALVE AND INTAKE MANIFOLD

(a) Place a new gasket, the T–VIS valve and the other new gasket on the cylinder head.

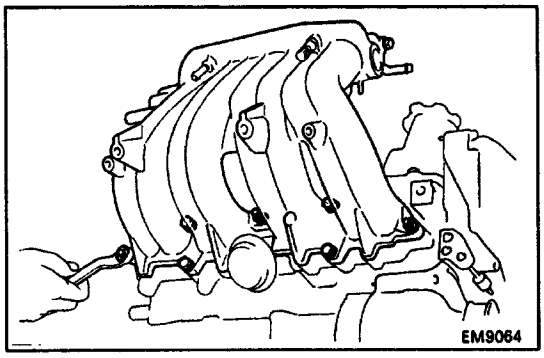

(b) Install the intake manifold with the four bolts and three nuts. Uniformly tighten the bolts and nuts in several passes.

Torque: 19 N–m (195 kgf–cm, 14 ft–lbf)

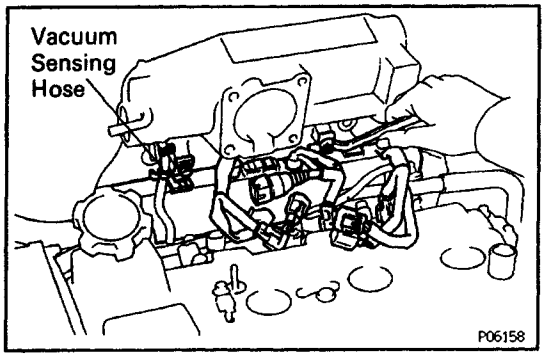

11. INSTALL ENGINE WIRE TO INTAKE MANIFOLD

(a) Install the engine wire clamp to the intake manifold with the two bolts.

(b) Connect the vacuum sensing hose to the intake manifold.

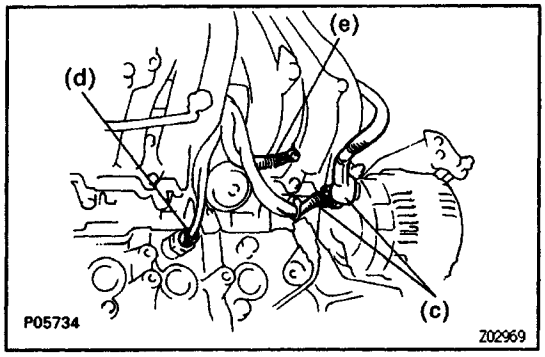

(c) Connect the alternator wire and connector.

(d) Connect the knock sensor connector.

(e) Connect the ground strap with the bolt.

(f) Connect the injector connectors.

HINT: No.1 and No.3 injector connectors are brown, No.2 and No.4 injector connectors are gray.

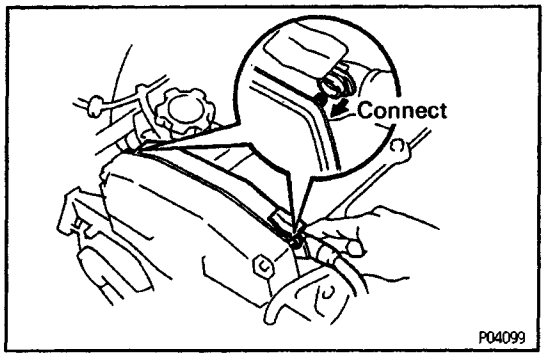

(g) Install the two clamps to the mounting bolts of the No. 2 timing belt cover.

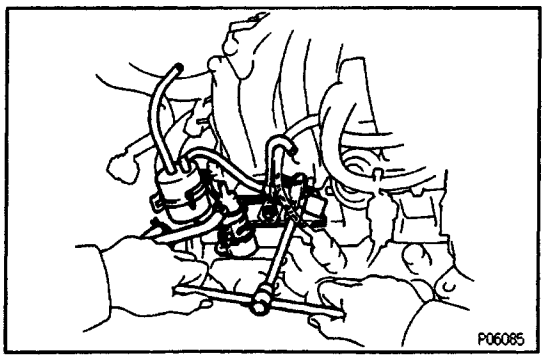

12. INSTALL T–VIS VACUUM TANK, VSV (FOR T–VIS) AND VSV (FOR TURBOCHARGING PRESSURE) ASSEMBLY

(a) Install the T–VIS vacuum tank, VSV (for T–VIS) and VSV (for turbocharging pressure) assembly with the two bolts.

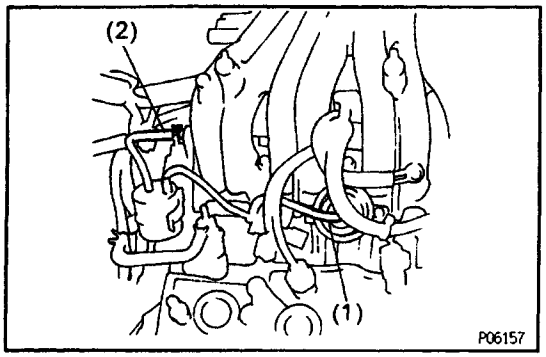

(b) Connect the following hoses:

(1) Vacuum hose (from VSV for T–VIS) to T–VIS actuator

(2) Vacuum hose (from T – VIS vacuum tank) to intake manifold

(c) Connect the following connectors:

- VSV (for T–VIS) connector
- VSV (for turbocharging pressure) connector

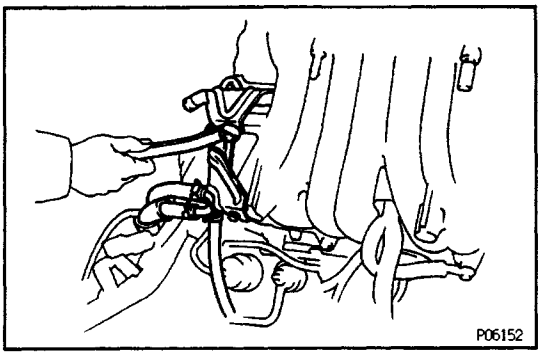

13. INSTALL NO.1 AIR TUBE

(a) Install the air tube with the two bolts.

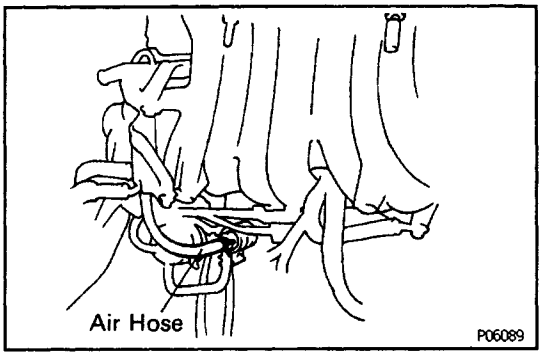

(b) Connect the air hose to the VSV (for turbocharging pressure).

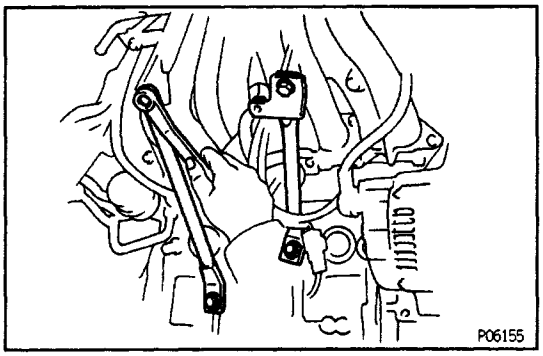

14. INSTALL INTAKE MANIFOLD STAYS

Install the manifold stay with the two bolts. Install the two manifold stays.

Torque: 25 N–m (260 kgf–cm, 19 ft–lbf)

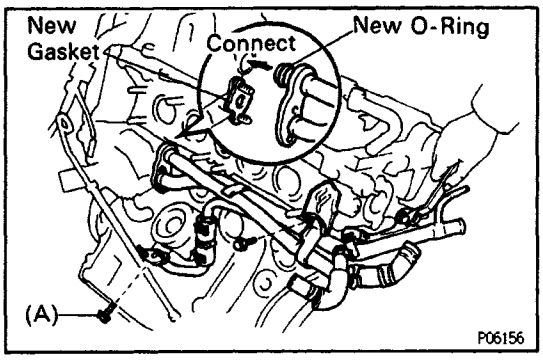

15. INSTALL WATER BY–PASS PIPE

(a) Install a new 0– ring to the pipe.
(b) Apply soapy water on the 0–ring.
(c) Install a new gasket to the water pump.
(d) Install the water by–pass pipe with the two nuts and two bolts.
Torque (Nuts): 7.8 N–m (80 kgf–cm, 69 in.¿lbf)
(e) Temporarily install the bolt (A).

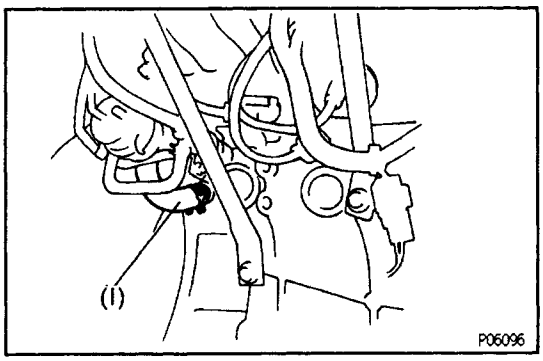

(f) Connect the following hoses:
(1) Water by–pass hose to cylinder block

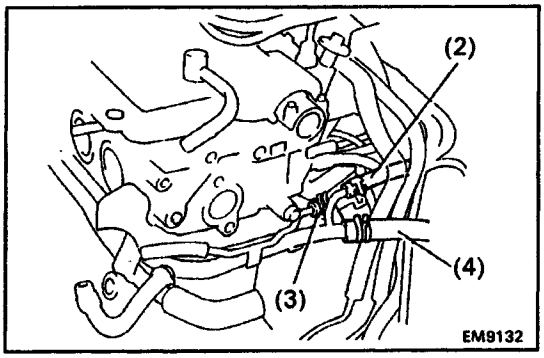

(2) Water by–pass hose to No.1 air tube
(3) Air hose to VSV (for turbocharging pressure)
(4) Heater water hose

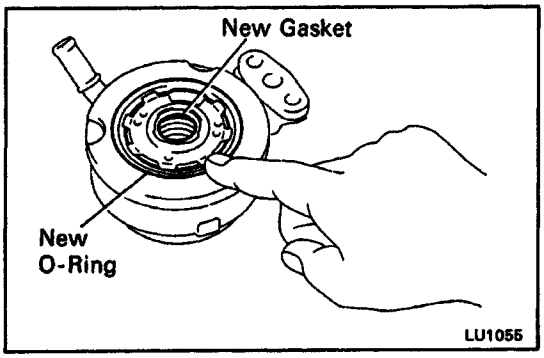

16. INSTALL OIL COOLER

(a) Install a new O–ring and gasket to the oil cooler.
(b) Place a new gasket on the water by–pass pipe.

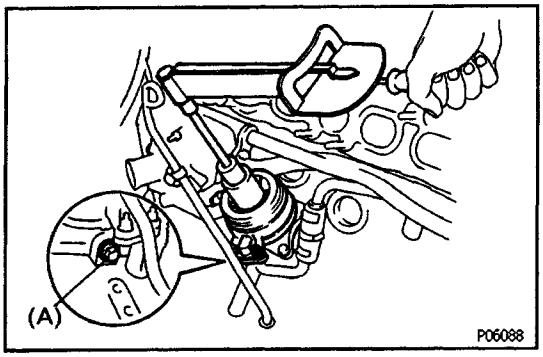

(c) Temporarily install the oil cooler with the two nuts.
(d) Apply a light coat of engine oil on the threads and under the head of the relief valve.
(e) Install the plate washer and relief valve.
Torque: 78 N–m (800 kgf–cm, 58 ft–lbf)
(f) Tighten the two nuts.
Torque: 7.8 N–m (80 kgf–cm, 69 in.¿lbf)
(g) Tighten the bolt (A).

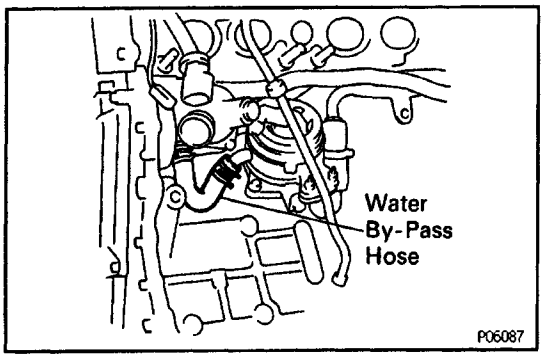

(h) Connect the water by–pass hose to the oil cooler.

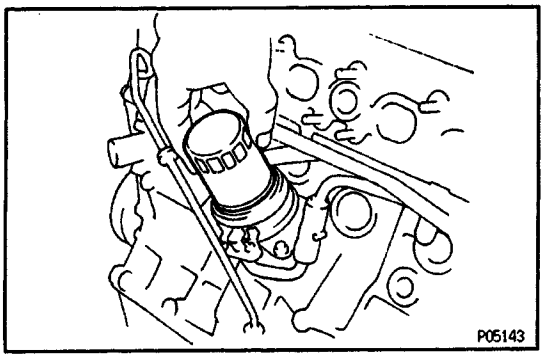

(i) Install the oil filter.
(See Replacement of Oil and Oil Filter under Lubrication System)

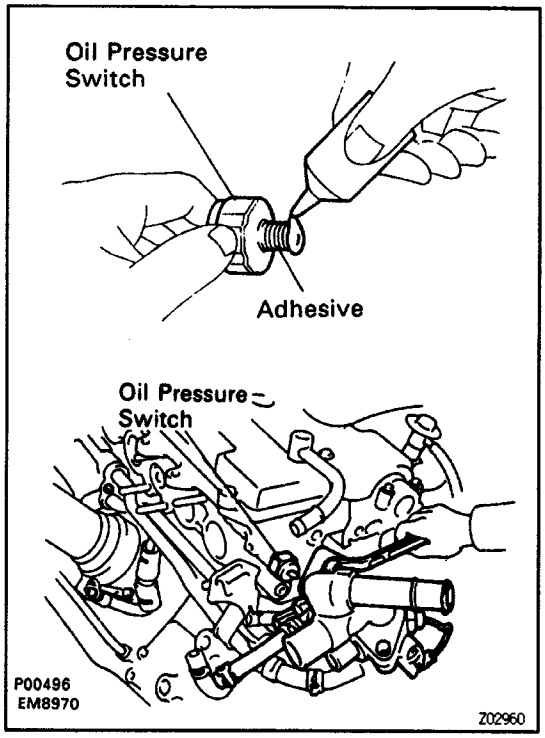

17. INSTALL OIL PRESSURE SWITCH

Apply adhesive to two or three threads.

Adhesive:

Part No. 08833–00080, THREE BOND 1324, or equivalent

18. INSTALL WATER OUTLET AND HOUSING

(a) Install a new gasket and the water outlet and housing assembly with the two bolts.

Torque: 39 N–m (400 kgf–cm, 29 ft–lbf)

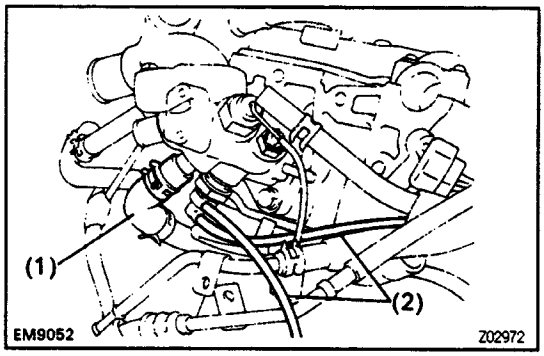

(b) Connect the following hoses:

(1) Water by–pass hose to water by–pass pipe

(2) Two TVS (for EVAP) vacuum hoses

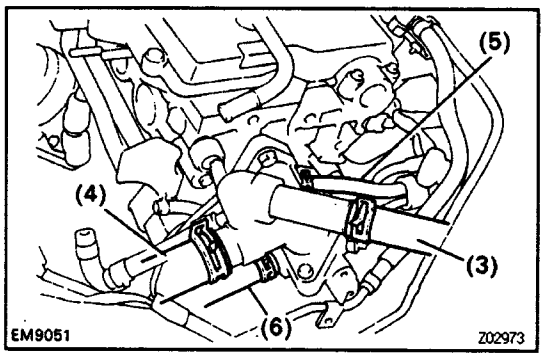

(3) Water filler hose

(4) Radiator hose

(5) Water by–pass pipe hose to IACV

(6) Heater water hose

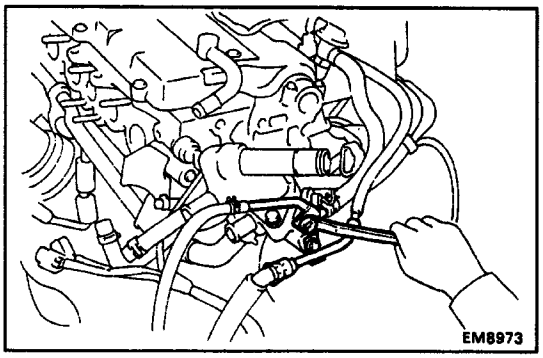

(c) Install the fuel inlet hose with the bolt.

(d) Install the fuel return hose with the bolt.

(e) Connect the following connectors:

- Water temperature sender gauge connector
- ECTS connector
- Cold start injector time switch connector

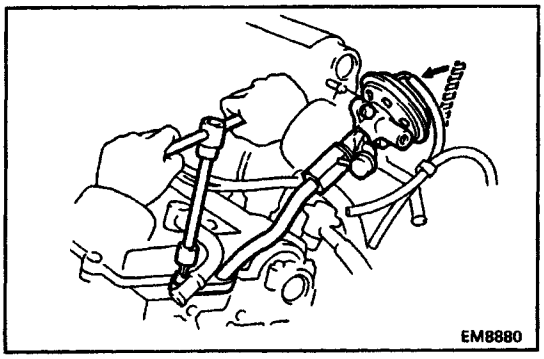

19. INSTALL EGR VALVE AND PIPE

(a) Install two new gaskets, the EGR valve and pipe assembly with the four bolts.

Torque:

19 N–m (195 kgf–cm, 14 ft–lbf) for intake manifold

25 N–m (260 kgf–cm, 19 ft–lbf) for cylinder head

(b) Connect the vacuum hose to the EGR valve.

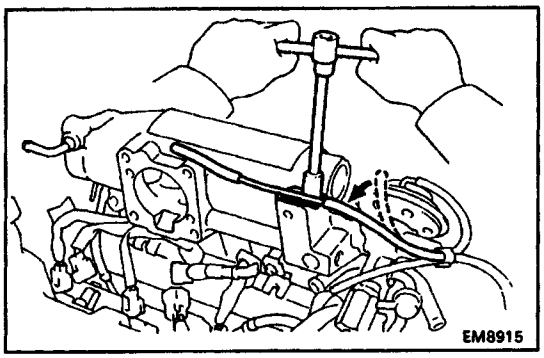

20. INSTALL VACUUM PIPE

(a) Install the vacuum pipe with the bolt.

(b) Connect the vacuum hose to the vacuum pipe.

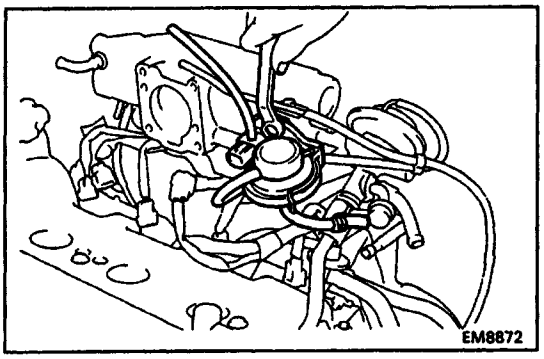

21. INSTALL EGR VACUUM MODULATOR AND VSV

(a) Install the EGR vacuum modulator and VSV assembly with the bolt.

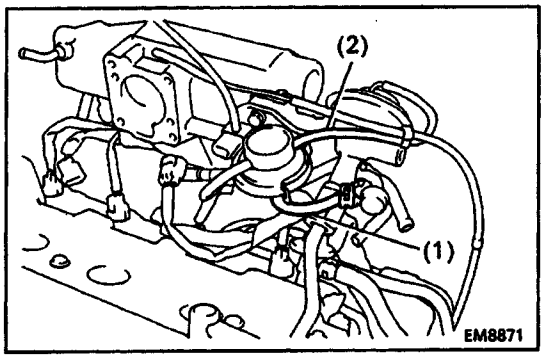

(b) Connect the following hoses:

(1) EGR hose to EGR valve

(2) Vacuum hose to EGR vacuum modulator

(c) Connect the EGR connector.

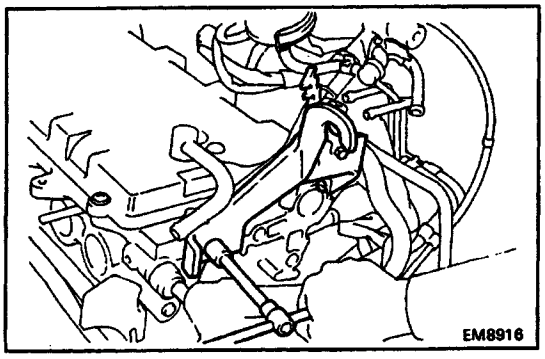

22. INSTALL LH ENGINE HANGER

Install the LH engine hanger with the two bolts.

Torque:

13 N–m (13o kgf–cm, 9 ft–lbf) for 12 mm head

19 N–m (195 kgf–cm, 14 ft–lbf) for 14 mm head

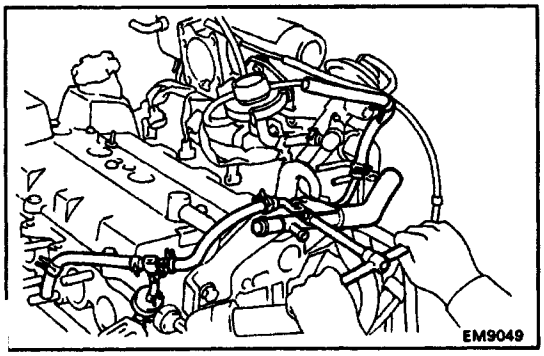

23. INSTALL NO.2 AIR TUBE

(a) Install the No.2 air tube with the bolt.

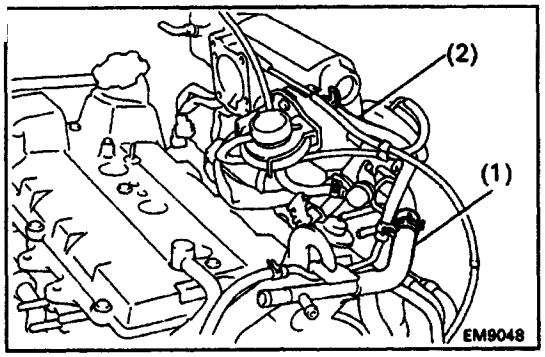

(b) Connect the following hoses:
(1) Air hose to No. 1 air tube
(2) Air hose to intake manifold

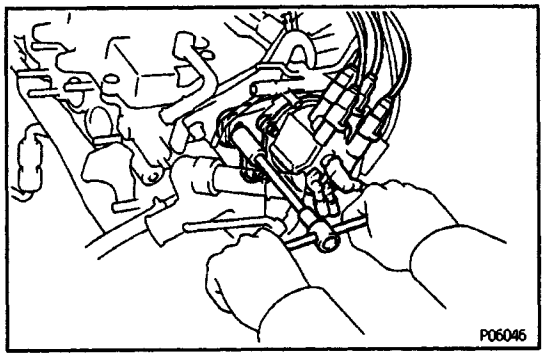

24. INSTALL DISTRIBUTOR
(See Distributor Installation in IG section)

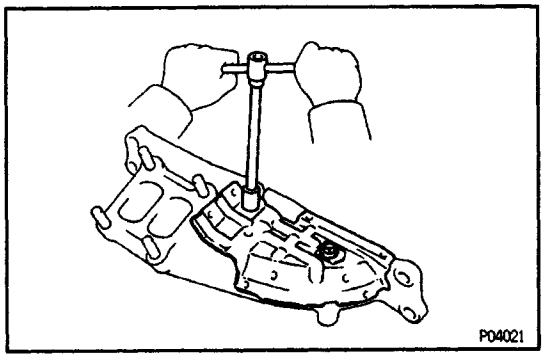

26. INSTALL EXHAUST MANIFOLD

(a) Install the heat insulator with the bolt and nut.

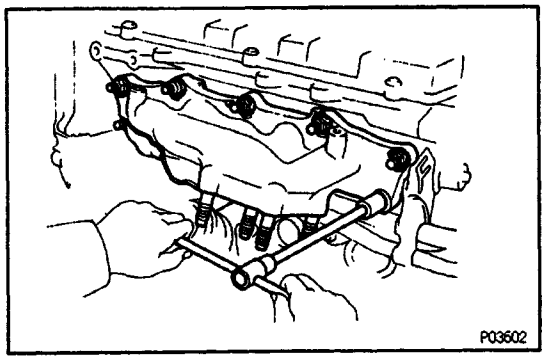

(b) Install a new gasket and the exhaust manifold with the seven nuts. Uniformly tighten the nuts in several passes.
Torque: 52 N–m (530 kgf–cm, 38 ft–lbf)

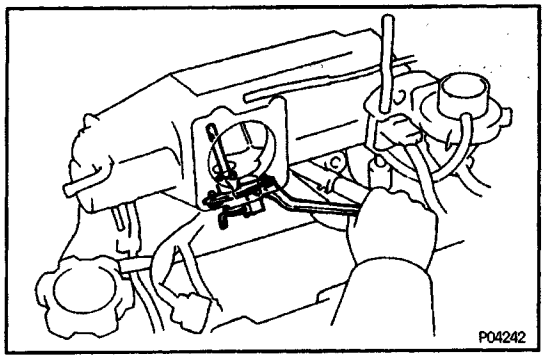

26. INSTALL COLD START INJECTOR

(a). Install a new gasket and the cold start injector with the two bolts.

Torque: 5.9 N–m (60 kgf–cm, 52 in.–lbf)

(b) Connect the cold start injector connector.

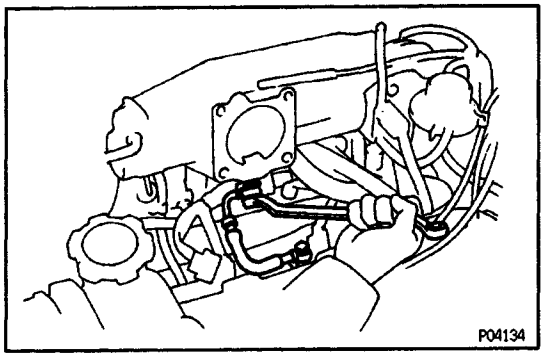

27. INSTALL. COLD START INJECTOR PIPE

Install the cold start injector pipe with four new gaskets and two union bolts.

Torque: 12 N–m (125 kgf–cm, 9 ft–lbf)

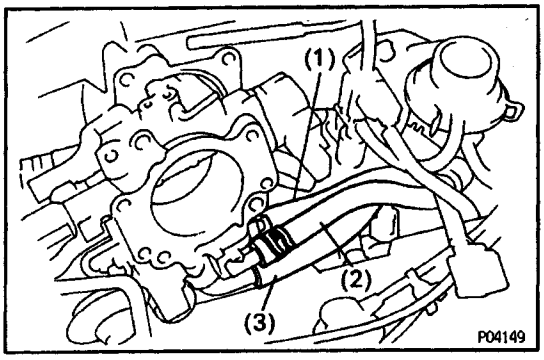

28. INSTALL THROTTLE BODY

(a) Connect the following hoses to the throttle body.

(1) Water by–pass hose (from upper side of No. 1 air tube)

(2) Water by–pass hose (from lower side of No. 1 air tube)

(3) Air hose (from No. 1 air tube)

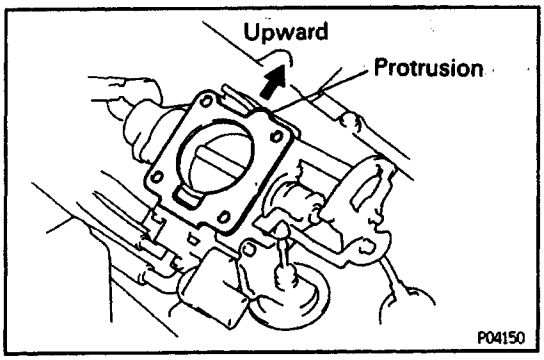

(b) Install a new gasket to the throttle body.

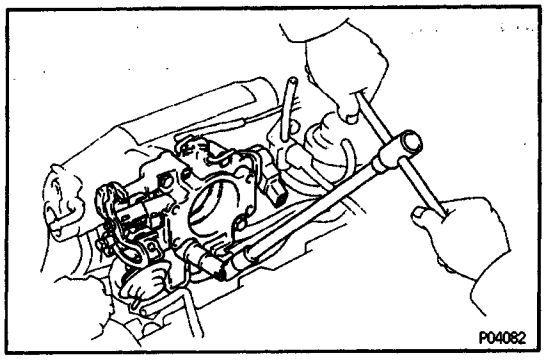

(c) Install the throttle body with the four bolts.

Torque: 19 N–m (195 kgf–cm, 14 ft–lbf)

HINT: Different bolt lengths are used for the upper and lower sides.

Bolt length:

45 mm (1.77 in.) for upper bolt

70 mm (2.76 in.) for lower bolt

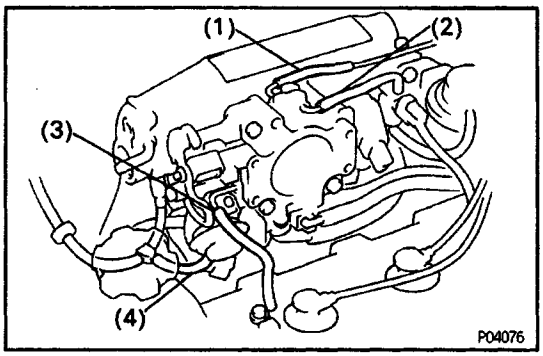

(d) Connect the following hoses:
(1) Vacuum hose to port ”P” of throttle body
(2) Vacuum hose to port ”E” of throttle body
(3) PCV hose to port PCV of throttle body
(4) Vacuum hose to throttle body opener

(e) Connect the following connector:
- Throttle position sensor connector
- IACV connector

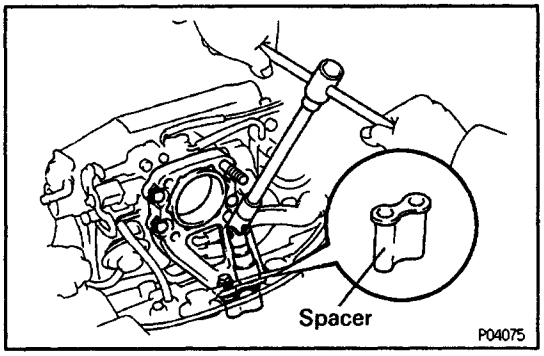

29. INSTALL INTAKE AIR CONNECTOR STAY
(a) Install the spacer.
(b) Install the intake air connector stay with the six bolts.
Torque:
7.8 N–m (80 kgf–cm, 69 in.–lbf) for 10 mm head
19 N–m (195 kgf–cm, 14 ft–lbf) for 12 mm head

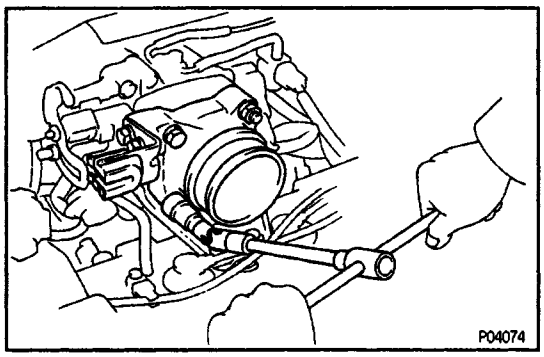

30. INSTALL INTAKE AIR CONNECTOR
Install the intake air connector with the two bolts and two nuts.
Torque: 19 N–m (195 kgf–cm, 14 ft–lbf)

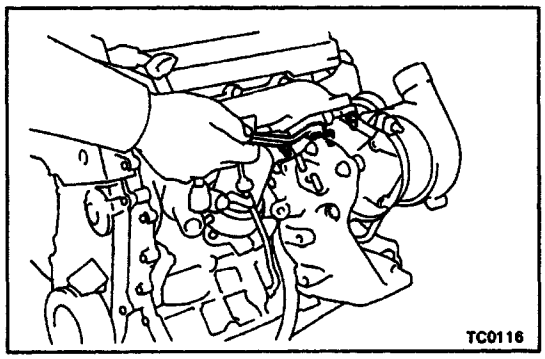

31. INSTALL TURBOCHARGER
(See Turbocharger Removal under Turbocharger System)

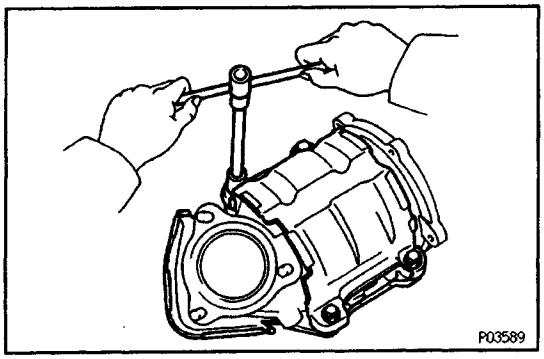

32. INSTALL MAIN TWC

(a) Install the two heat insulator to the TWC with the nine bolts.

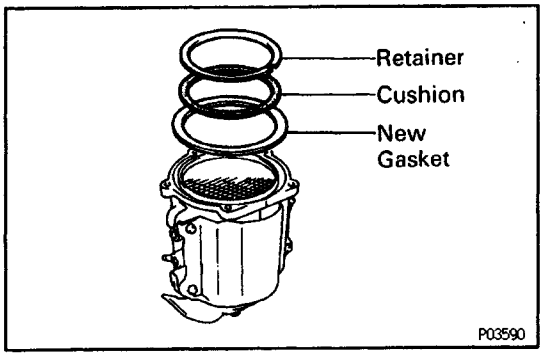

(b) Place the cushion, retainer and a new gasket on the TWC.

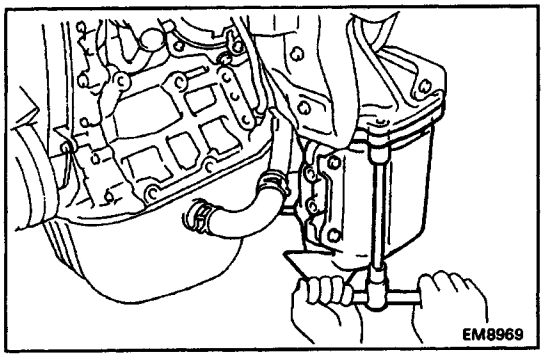

(c) Install the TWC with the three bolts and two nuts.
Torque: 29 N–m (300 kgf–cm, 22 ft–lbf)

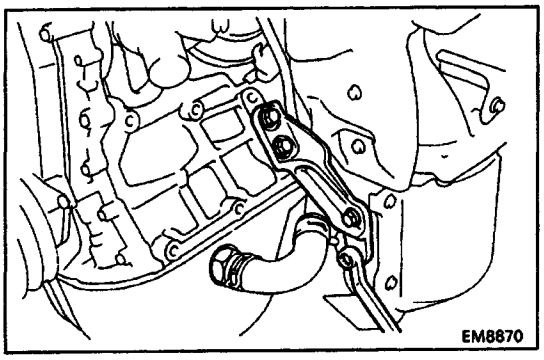

(d) install the RH TWC stay with the four bolts.
Torque: 59 N–m (600 kgf–cm, 43 ft–lbf)

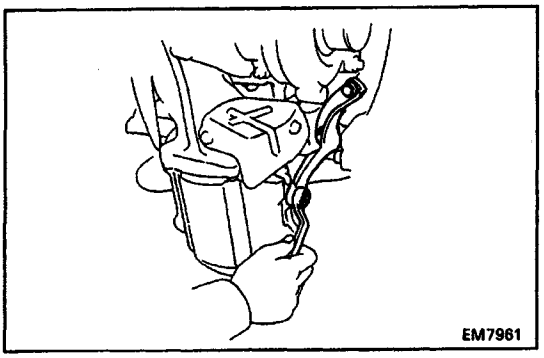

(e) Install the LH TWC stay with the three bolts.
Torque: 59 N–m (600 kgf–cm, 43 ft–lbf)

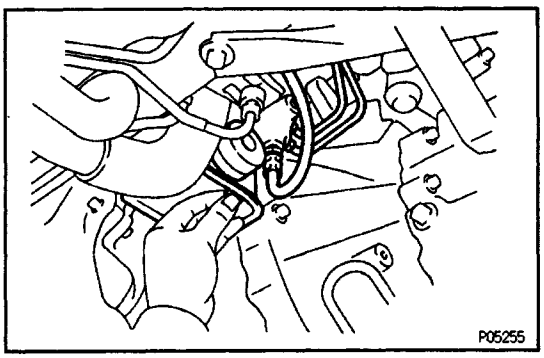

33. INSTALL CLUTCH RELEASE CYLINDER AND FRONT ENGINE MOUNTING BRACKET

(a) Temporarily install the release cylinder and mounting bracket with the two bolts.

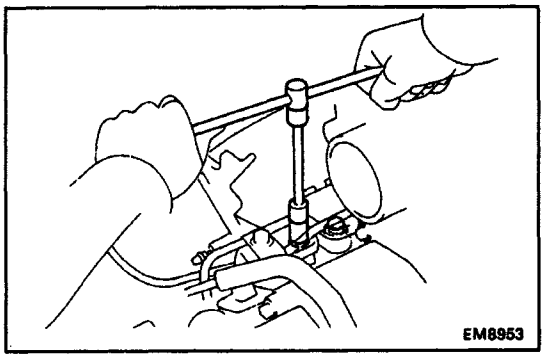

(b) Install the clutch release cylinder with the two bolts.
Torque: 12 N–m (120 kgf–cm, 9 ft–lbf)

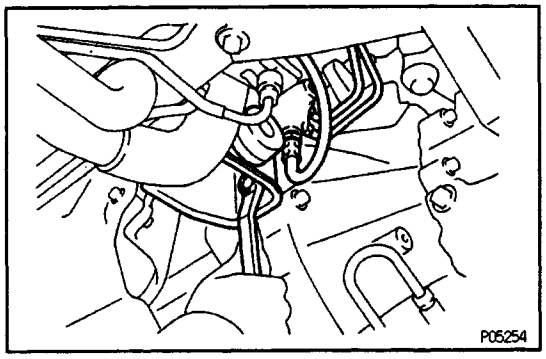

(c) Tighten the two bolts holding the clutch release cyl–inder to the transaxle.
Torque: 77 N–m (790 kgf–cm, 57 ft–lbf)

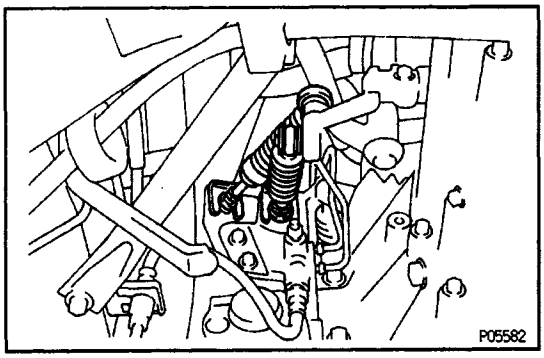

(d) Connect the two transaxle control cables to the tra–nsaxle.

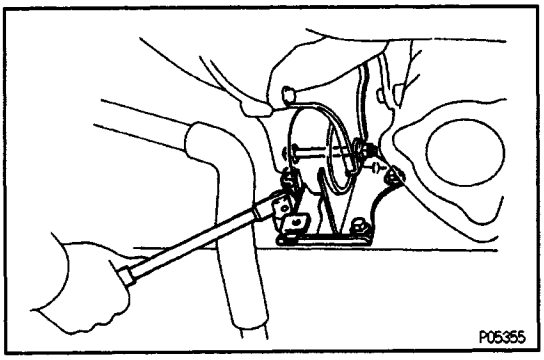

34. INSTALL FRONT ENGINE MOUNTING INSULATOR

(a) Install the mounting insulator to the body with the four bolts.
Torque: 77 N–m (790 kgf–cm, 57 ft–lbf)

(b) Install the mounting insulator to the mounting bracket with the through bolt and nut.
Torque: 96 N–m (980 kgf–cm, 71 ft–lbf)

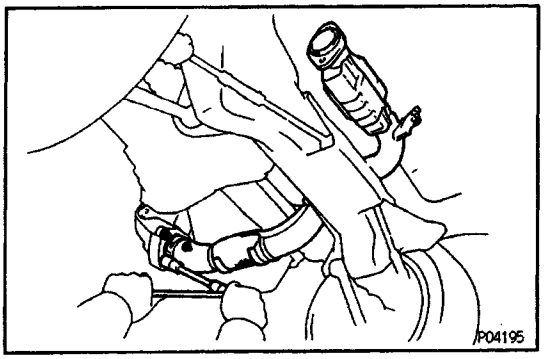

35. INSTALL FRONT EXHAUST PIPE

(a) Place a new gasket to the front of the front exhaust pipe.

(b) Using a 14 mm deep socket wrench, install the front exhaust pipe with three new nuts.

Torque: 62 N–m (630 kgf–cm, 46 ft–lbf)

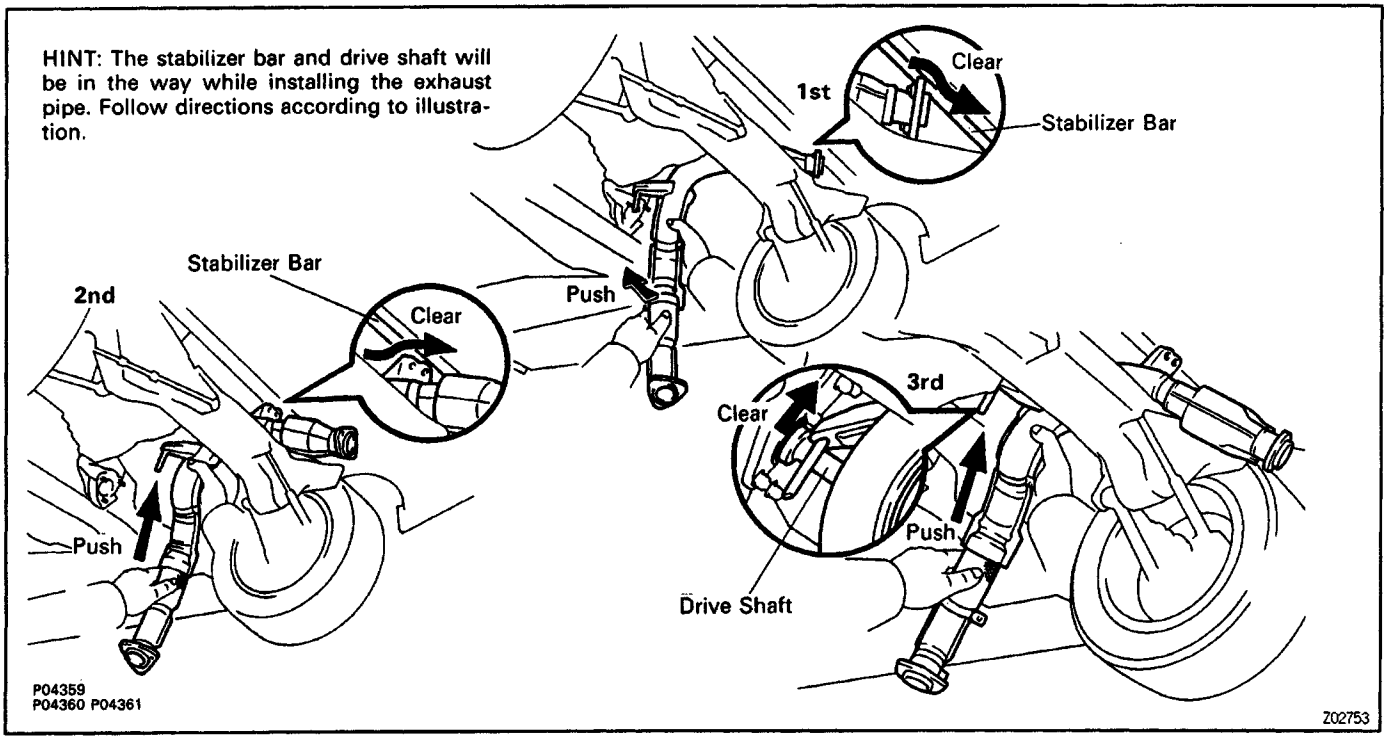

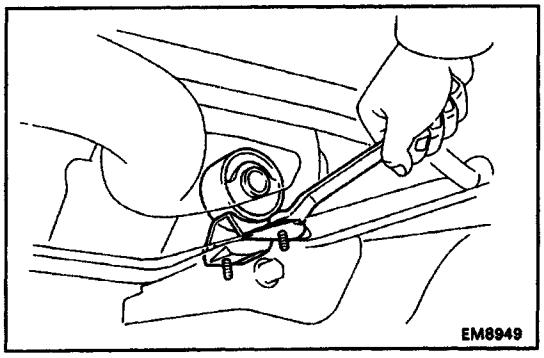

(c) Install the support bracket with the two bolts.

Torque: 21 N–m (210 kgf–cm, 15 ft–lbf)

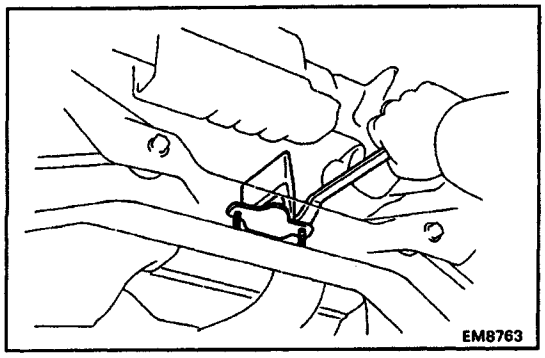

(d) Install the damper with the two bolts.

Torque: 21 N–m (210 kgf–cm, 15 ft–lbf)

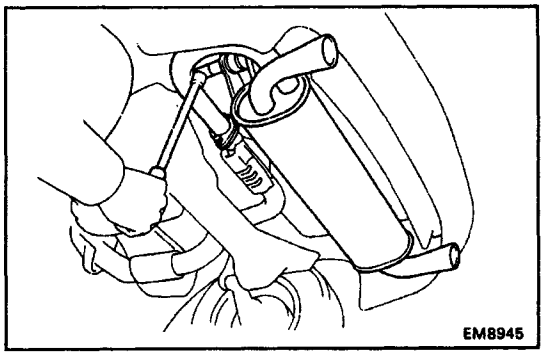

36. INSTALL TAILPIPEE

(a) Place a new gasket to the rear of the front exhaust pipe.

(b) Install the tailpipe to the body bracket with the two bolts and nut.

Torque:66 N–m (670 kgf–cm, 48 ft–lbf)

(c) Install the two bolts holding the front exhaust pipe to the tailpipe.

Torque: 43 N–m (440 kgf–cm, 32 ft–lbf)

(d) Install the two bolts holding the front exhaust pipe bracket to the tailpipe bracket.

Torque: 19 N–m (190 kgf–cm, 14 ft–lbf)

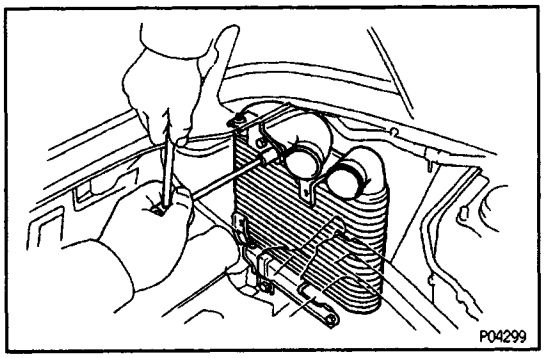

37. INSTALL CAC

Install the CAC and upper bracket with the five bolts.

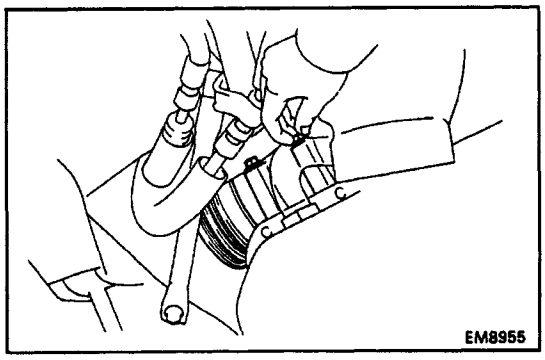

38. INSTALL A/C COMPRESSOR

(a) Temporarily install the A/C compressor with the with the two bolts.

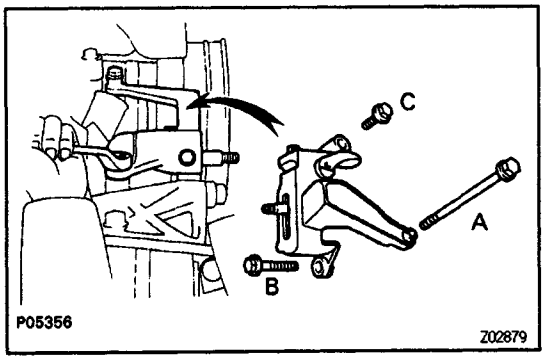

(b) Install the idler pulley bracket with the three bolts.

Torque:

25 N–m (250 kgf–cm, 18 ft–lbf) for A

27 N–m (275 kgf–cm, 20 ft–lbf) for B

37 N–m (375 kgf–cm, 27 ft–lbf) for C

(c) Connect the A/C compressor connector.

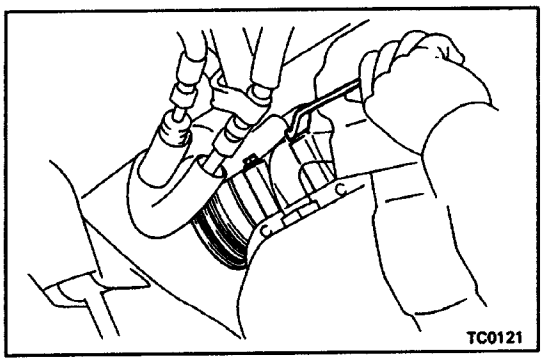

(d) Tighten the two bolts of the lower side of the A/C compressor.
Torque: 25 N–m (250 kgf–cm, 18 ft–lbf)

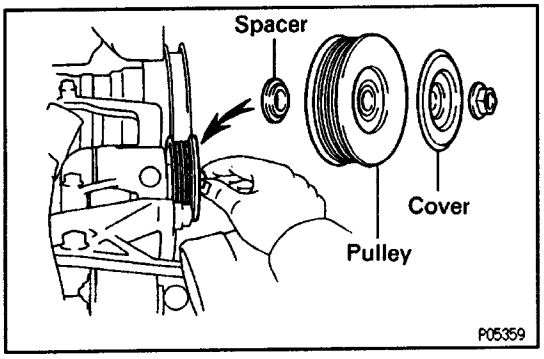

(e) Temporarily install the spacer, idler pulley and pulley cover with the nut.

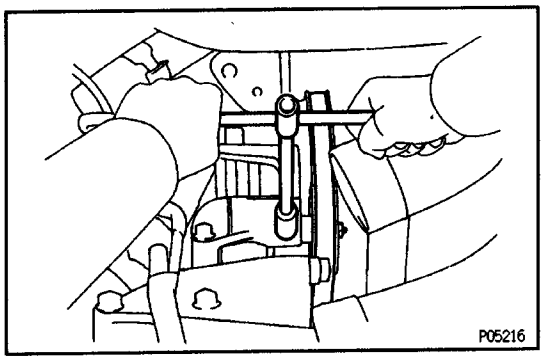

(f) Install the drive belt with the adjusting bolt.
(g) Tighten the idler pulley nut.

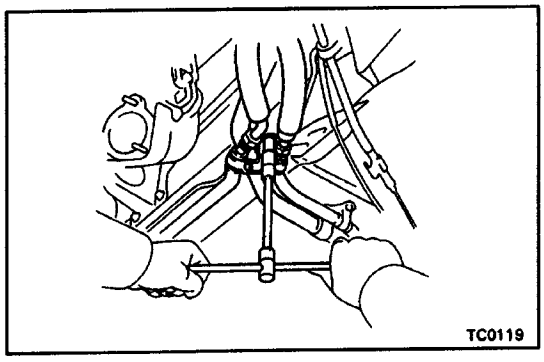

(h) Install the A/C pipes with the two clamps and nut.

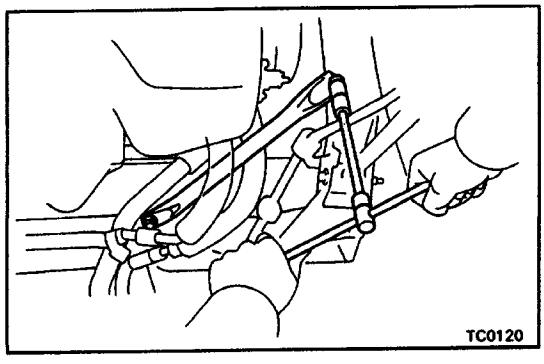

(i) Install the lower suspension brace with the two bolts.
Torque: 73 N–m (740 kgf–cm, 54 ft–lbf)

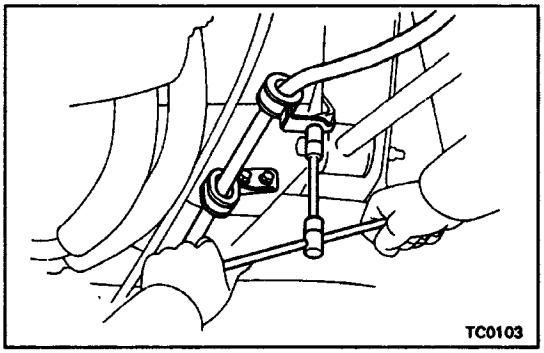

(j) Install the parking brake cable with the two clamps and three bolts.

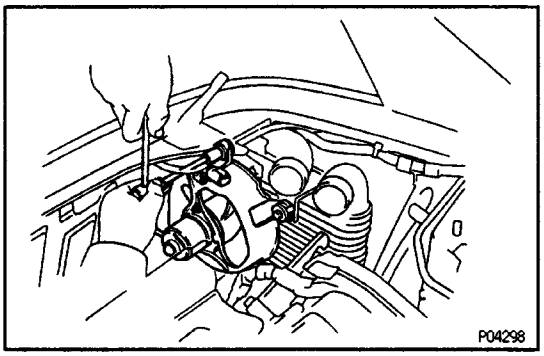

39. INSTALL ENGINE COMPARTMENT ELECTRIC COOLING FAN

(a) Install the cooling fan with the three bolts.
(b) Connect the cooling fan connector.

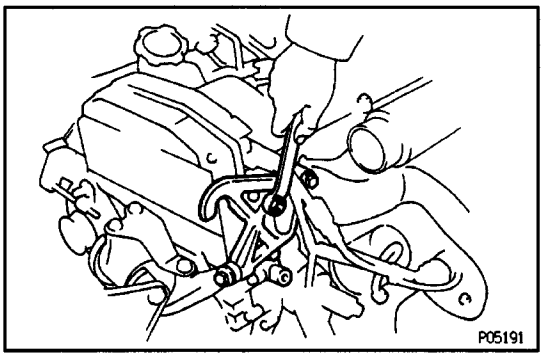

40. INSTALL RH FRONT ENGINE HANGER

Install the engine hanger with the four bolts.

Torque:

39 N–m (400 kgf–cm, 29 ft–lbf) for cylinder head
61 N–m (620 kgf–cm, 45 ft–lbf) for mounting bracket

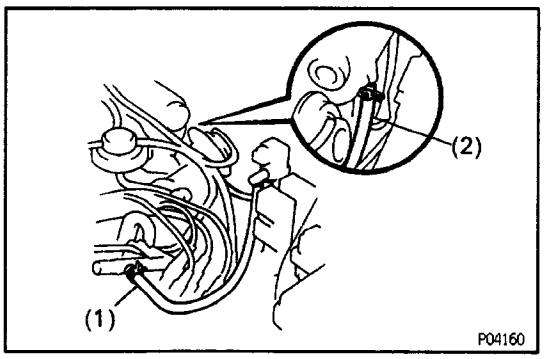

41. CONNECT A/C IDLE–UP AIR HOSES

(1) Air hose to No.2 air tube
(2) Air hose to intake manifold

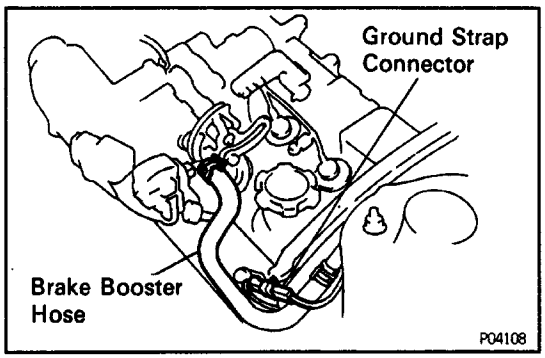

42. CONNECT BRAKE BOOTER VACUUM HOSE
43. CONNECT GROUND STRAP CONNECTOR

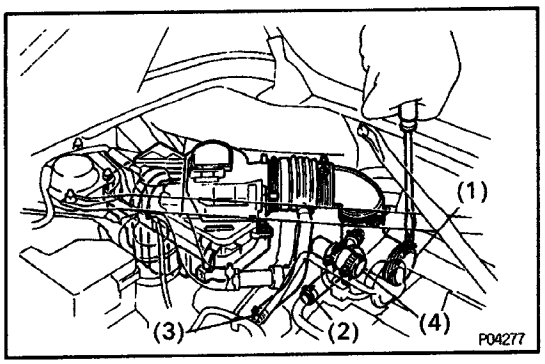

44. INSTALL AIR CLEANER HOUSING

(a) Install the air cleaner case with the three bolts.
(b) Install the air filter.
(c) Install the air cleaner cap and air flow sensor assembly with the four clips.
(d) Connect the following hoses:
(1) Air cleaner hose to turbocharger
(2) PCV hose to cylinder head cover
(3) Air hose to No.2 air tube
(4) Air hose to air by–pass valve
(e) Connect the air flow sensor connector.

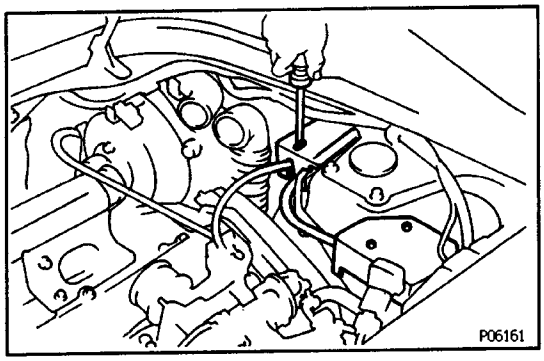

45. (w/ CRUISE CONTROL SYSTEM)
INSTALL CRUISE CONTROL ACTUATOR AND ACCELERATOR LINKAGE

46. (w/o CRUISE CONTROL SYSTEM)
CONNECT ACCELERATOR LINKAGE TO THROTTLE BODY

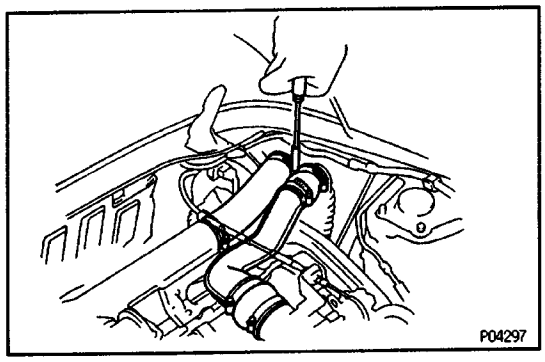

47. INSTALL NO.1 AND NO.2 INTAKE AIR CONNECTORS

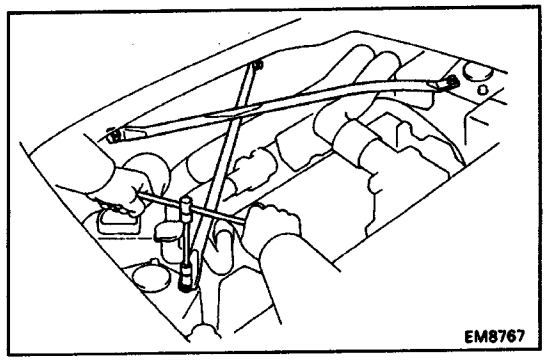

48. INSTALL UPPER SUSPENSION BRACE

Install the upper brace with the two bolts and two nuts.

Torque:

73 N–m (740 kgf–cm, 54 ft–lbf) for bolt
64 N–m (650 kgf–cm, 47 ft–lbf) for nut

49. CONNECT CABLE TO NEGATIVE TERMINAL OF BATTERY

50. FILL WITH ENGINE COOLANT

51. START ENGINE AND CHECK FOR LEAKS

52. ADJUST IGNITION TIMING

53. INSTALL ENGINE HOOD SIDE PANELS

54. INSTALL ENGINE UNDER COVERS

55. PERFORM ROAD TEST

Check for abnormal noise, shock, slippage, correct shift points and smooth operation.

58. RECHECK ENGINE COOLANT AND OIL LEVELS

3S–GTE ENGINE

ENGINE MECHANICAL

DESCRIPTION

EG0VX–01

The 3S–GTE engine is an in–line, 4–cylinder, 2.0 liter DOHC 16–valve engine.

OPERATION

EG0AX–02

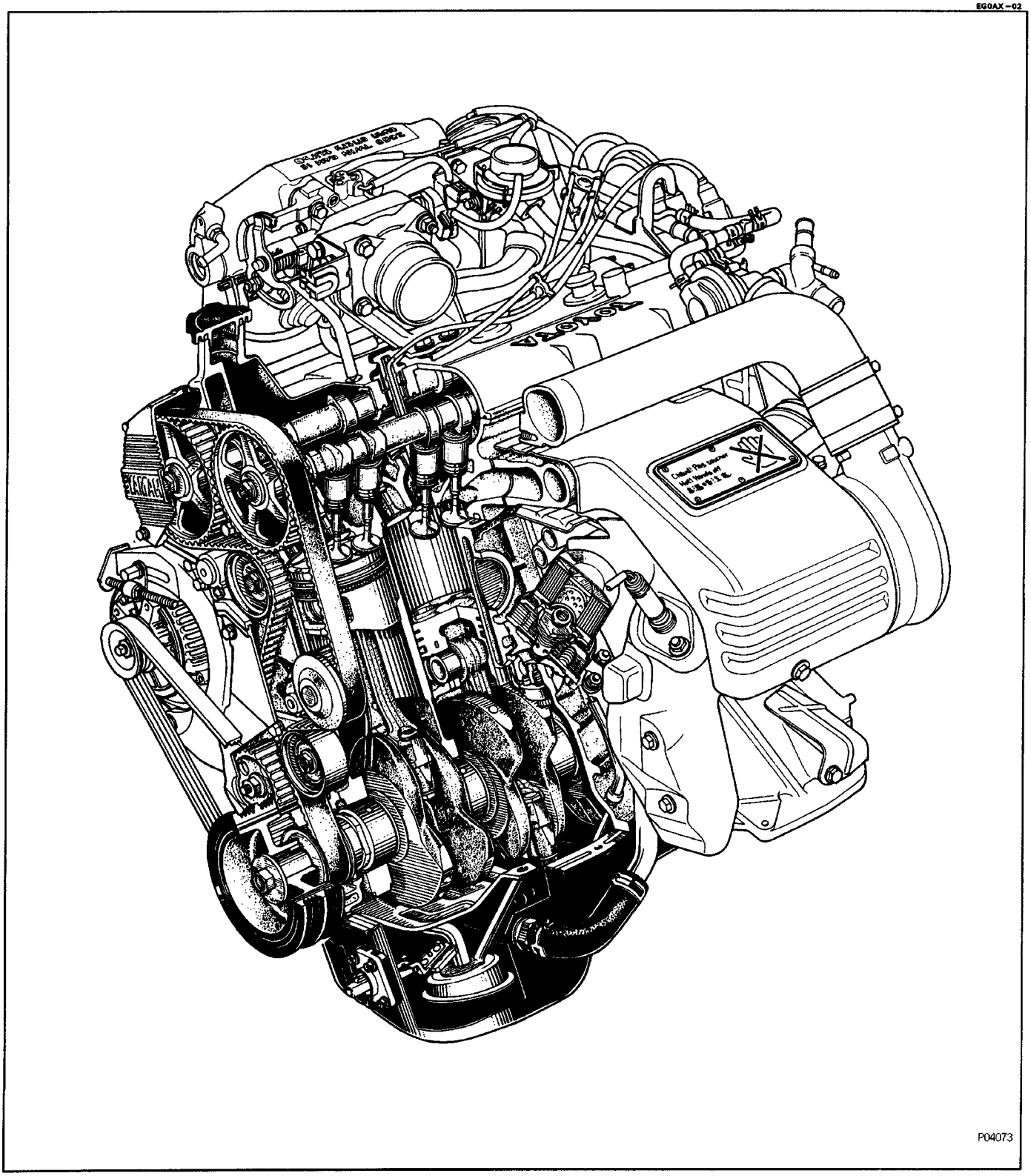

EXHAUST SYSTEM COMPONENTS

EG0WQ–01

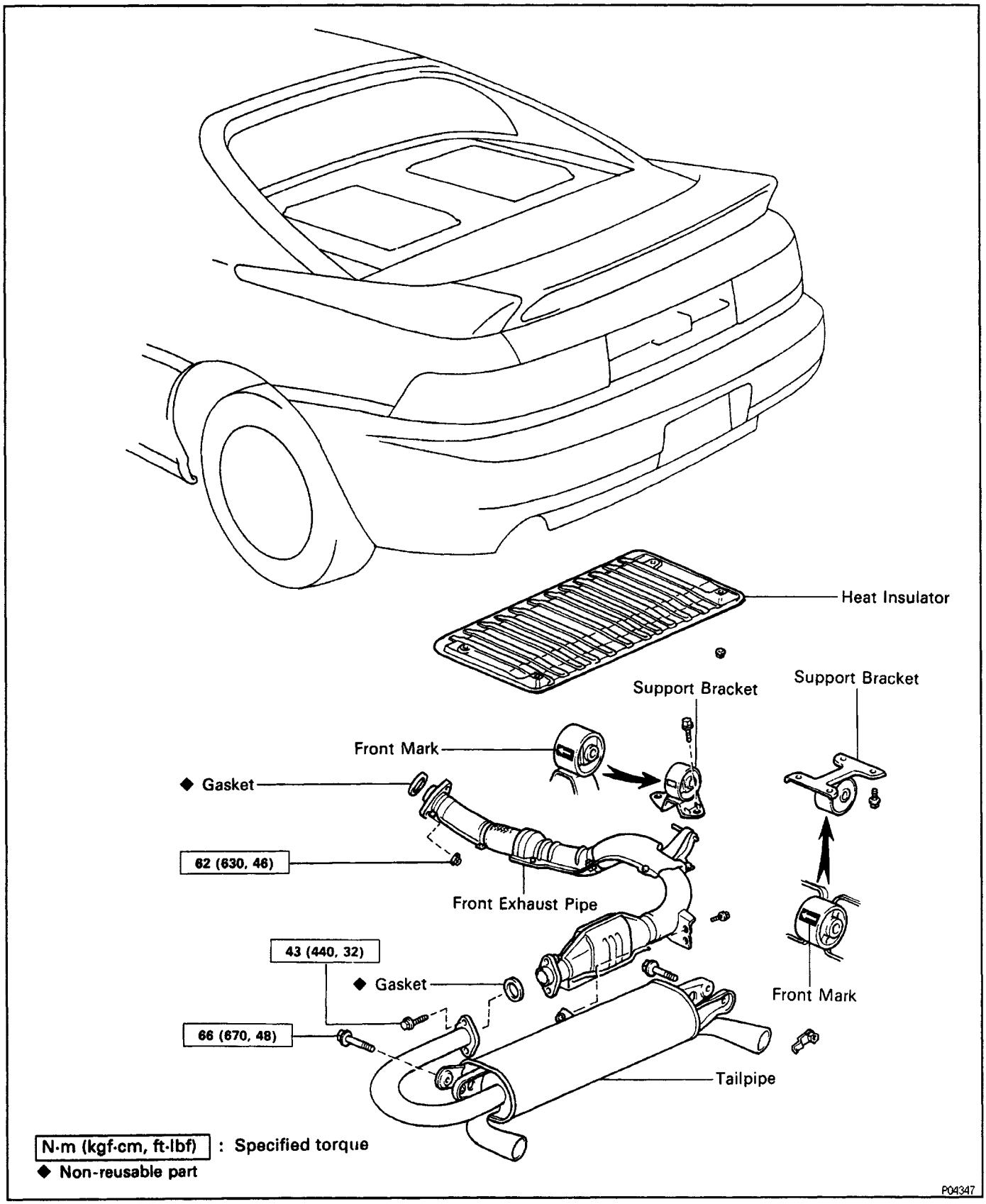

IDLE AND OR 2500 RPM CO HC CHECK

HINT: This check is used only to determine whether or not the idle CO/HC complies with regulations.

1. INITIAL CONDITIONS

(a) Engine at normal operating temperature
(b) Air cleaner installed
(c) All pipes and hoses of air induction system connected
(d) All accessories switched OFF
(e) All vacuum lines properly connected

HINT: All vacuum hoses for EGR systems, etc. should be properly connected.

(f) SMPI system wiring connectors fully plugged
(g) Ignition timing set correctly
(h) Transmission in neutral range
(i) Tachometer and CO/HC meter calibrated by hand

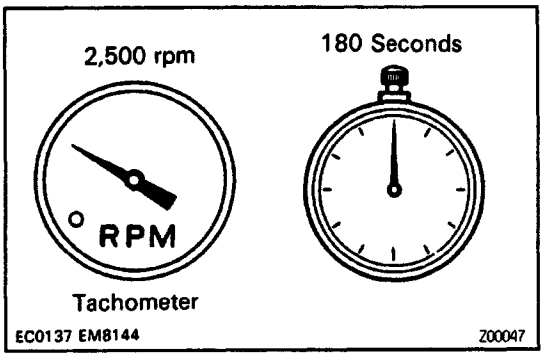

2. START ENGINE

3. RACE ENGINE AT 2,500 RPM FOR APPROX. 180 SECONDS

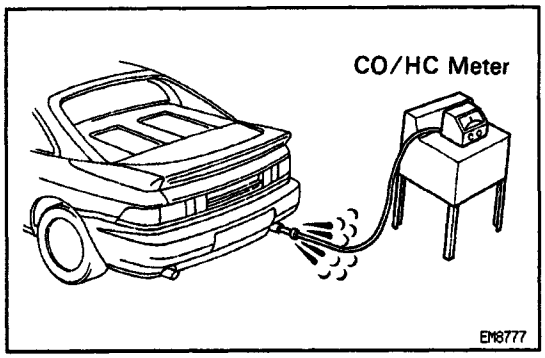

4. INSERT CO/HC METER TESTING PROBE INTO TAILPIPE AT LEAST 40 cm (1.3 ft) DURING IDLING

5. IMMEDIATELY CHECK CO/HC CONCENTRATION AT IDLE AND/OR 2,500 RPM

HINT: When performing the 2 mode (2,500 rpm and idle) test, follow the measurement order prescribed by the applicable local regulations.

Troubleshooting

If the CO/HC concentration does not comply with regulations, perform troubleshooting in the order given below.

(a) Check oxygen sensor operation.
(See Main Oxygen Sensor Inspection under SMPI System)

(b) See the table below for possible causes, and then inspect and correct the applicable causes if neces–sary.

HC	CO	Problems	Causes
High	Normal	Rough idle	1. Faulty ignitions: • Incorrect timing • Fouled, shorted or improperly gapped plugs • Open or crossed high–tension cords • Cracked distributor cap 2. Incorrect valve clearance 3. Leaky EGR valve 4. Leaky intake and exhaust valves 5. Leaky cylinder
High	Low	Rough idle (Fluctuating HC reading)	1. Vacuum leaks: • PCV hose • EGR valve • Intake manifold • T–VIS valve • Throttle body • IACV • Brake booster line 2. Lean mixture causing misfire
High	High	Rough idle (Black smoke from exhaust)	1. Restricted air filter 2. Faulty SMPI systems: • Faulty pressure regulator • Clogged fuel return line • Defective ECTS • Defective MAP • Faulty PCME • Faulty injector • Faulty cold start injector • Faulty throttle position sensor • Faulty air flow sensor

V00995

ENGINE MECHANICAL

DESCRIPTION

EG0VX–01

The 3S–GTE engine is an in–line, 4–cylinder, 2.0 liter DOHC 16–valve engine.

OPERATION

EG0AX–02

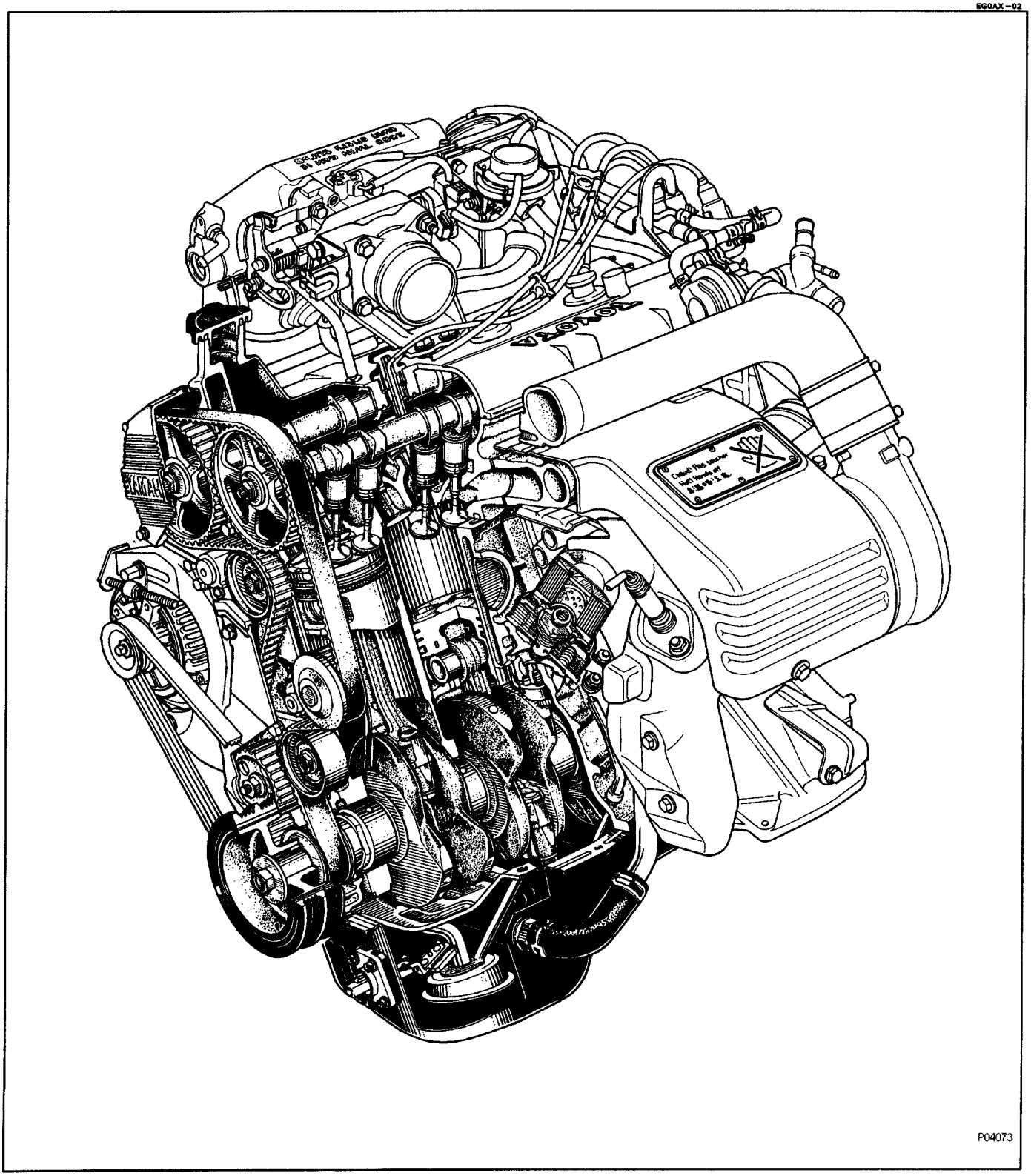

P04073

The 3S–GTE engine is an in–line, 4–cylinder engine with the cylinders numbered 1 – 2 – 3 – 4 from the front. The crankshaft is supported by 5 bearings inside the crankcase. These bearings are made of aluminum alloy.

The crankshaft is integrated with 8 weights for balance. Oil holes are placed in the center of the crankshaft to supply oil to the connecting rods, bearing, pistons and other components.

The ignition order is 1 – 3 – 4 –

2. The cylinder head is made of aluminum alloy, with a cross

flow type intake and exhaust layout and with pent–roof type combustion chambers. The spark plugs are located in the center of the combustion chambers.

The intake manifold has 8 independent long ports and utilizes the inertial supercharging effect to improve engine torque at low and meduim speeds. Both the intake camshaft and the exhaust camshaft are driven by a single timing belt. The cam journal is supported at 5 places between the valve lifters of each cylinder and on the front end of the cylinder head. Lubrication of the cam journals and cams is accomplished by oil being supplied through the oiler port in the center of the camshaft.

Adjustment of the valve clearance is done by means of an outer shim type system, in which valve adjusting shims are located above the valve lifters. This permits replacement of the shims without removal of the camshafts.

Pistons are made of high temperature–resistant aluminum alloy, and a depression is built into the piston head to prevent interference with the valves.

Piston pins are the full–floating type, with the pins fastened to neither the piston boss nor the connecting rods. Instead, snap rings are fitted on both ends of the pins, preventing the pins from falling out.

The No.1 compression ring is made of steel and the No.2 compression ring is made of cast iron. The oil ring is made of a combination of steel and stainless steel. The outer diameter of each piston ring is slightly larger than the diameter of the piston and the flexibility of the rings allows them to hug the cylinder walls when they are mounted on the piston. Compression rings No. 1 and

No.2 work to prevent gas leakage from the cylinder and the oil ring works to scrape oil off the cylinder walls to prevent it from entering the combustion chambers.

The cylinder block is made of cast iron. It has 4 cylinders which are approximately twice the length of the piston stroke. The top of each cylinder is closed off by the cylinder head and the lower end of the cylinders becomes the crankcase, in which the crankshaft is installed. In addition, the cylinder block contains a water jacket, through which coolant is pumped to cool the cylinders.

The oil pan is bolted onto the bottom of the cylinder block. The oil pan is an oil reservoir made of pressed steel sheet. A dividing plate is included inside the oil pan to keep sufficient oil in the bottom of the pan even when the vehicle is tilted. This dividing plate also prevents the oil from making waves when the vehicle is stopped suddenly and the oil shifts away from the oil pump suction pipe.

PREPARATION

EG0AY–03

SST (SPECIAL SERVICE TOOLS)

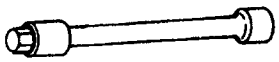	09043–38100 Hexagon 10 mm Wrench	Cylinder head bolt
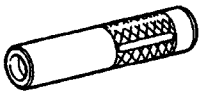	09201–41020 Valve Stem Oil Seal Replacer	
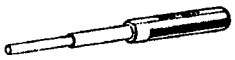	09201–70010 Valve Guide Bushing Remover & Replacer	
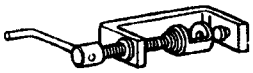	09202–70010 Valve Spring Compressor	
	09213–54015 Crankshaft Pulley Holding Tool	
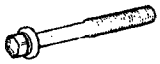	(90119–08216) Bolt	
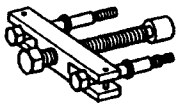	09213–31021 Crankshaft Pulley Pulier	
	09222–30010 Connecting Rod Bushing Remover & Replacer	
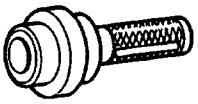	09223–50010 Crankshaft Front oil Seal Replacer	Camshaft oil seal
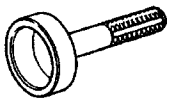	09223–63010 Crankshaft Rear Oil Seal Replacer	
	09228–06500 Oil Filter Wrench	
	09248–55020 Valve Clearance Adjust Tool Set	
	(09248 –05011) Valve Lifter Press	

	(09248–05021) valve Lifter Stopper	
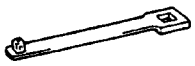	09249–63010 Torque Wrench Adaptor	
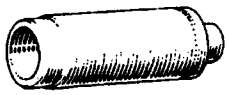	09226–10010 Crankshaft Front & Rear Bearing Replacer	
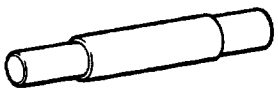	09301–17010 Clutch Guide Tool	
	09330–00021 Companion Flange Holding Tool	Crankshaft pulley
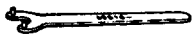	09616–30011 Steering Worm Bearing Adjusting Screw Wrench	Oil pump pulley
	09816–30010 Oil Pressure Switch Socket	Knock sensor
	09843–18020 Diagnosis Check Wire	

EG0AZ–01

RECOMMENDED TOOLS

	09090–04010 Engine Sling Device	For suspension engine
	09200–00010 Engine Adjust Kit	
	09258–00030 Hose Plug set	Plug for the vacuum hose, fuel hose etc.
	09904–00010 Expander set	

EG080–02

EQUIPMENT

Battery specific gravity gauge	
Belt tension gauge	
Caliper gauge	
CO/HC meter	
Compression gauge	
Connecting rod aligner	
Cylinder gauge	
Dial indicator	
Dye penetr–ant	
Engine Tune–up tester	
Heater	
Magnetic finger	
Micrometer	
Piston ring compressor	
Piston ring expander	
Plastigage	
Precision straight edge	
Soft brush	
Spring tester	Valve spring
Steel square	Valve spring
Thermometer	
Torque wrench	
Valve seat cutter	
Vernier calipers	

EG0B1–03

SSM (SERVICE SPECIAL MATERIALS)

08826–00080 Seal packing or equivalent	Camshaft bearing cap Cylinder head cover Rear oil sear retainer
08833–00070 Adhesive 1324, THREE BOND 1324 or equivalent	Flywheel mounting bolt
08833–00080 Adhesive 1344, THREE BOND 1344, LOCTITE 242 or equivalent	Oil pressure switch

SERVICE SPECIFICATIONS
SERVICE DATA

EGOCS–03

Tune – up	Battery specific gravity	1.25 – 1.27 (when fully charged at 20°C (68°F))
	High–tension cord resistance – Limit	25 kΩ per cord
	Alternator drive belt tension	
	New belt	120 ± 20 lbf
	Uesd belt	104 ± 20 lbf
	Valve clearance (Cold) – Intake	0.15 – 0.25 mm (0.006 – 0.010 in.)
	Valve clearance (Cold) – Exhaust	0.28 – 0.38 mm (0.011 – 0.015 in.)
	Ignition timing	10° BTDC @ idle
	Idle speed	800 ± 50 rpm
Intake manifold vacuum	at idle speed	60 kPa (450 mmHg, 17.7 in.Hg)
Compression pressure	at 250 rpm – STD	1,128 kPa (11.5 kgf/cm², 164 psi) or more
	at 250 rpm – Limit	883 kPa (9.0 kgf/cm², 128 psi)
	Difference of pressure between each cylinder	98 kPa (1.0 kgf/cm², 14 psi) or less
Timing belt tensioner	Protrusion	8.5 – 9.5 mm (0.335 – 0.374 in.)
Cylinder head	Warpage – Cylinder block side (Limit)	0.20 mm (0.0079 in.)
	Warpage – Intake manifold side (Limit)	0.20 mm (0.0079 in.)
	Warpage – Exhaust manifold side (Limit)	0.30 mm (0.0118 in.)
	Valve seat – Refacing angle	30°, 45°, 75°
	Valve seat – Contacting angle	45°
	Valve seat – Contacting width	1.0 – 1.4 mm (0.039 – 0.055 in.)
Valve guide bushing	Inside diameter	6.000 – 6.018 mm (0.2362 – 0.2369 in.)
	Outside diameter (for replacement part) – STD	10.988 – 11.006 mm (0.4326 – 0.4333 in.)
	Outside diameter (for replacement part) – O/S 0.05	11.038 – 11.056 mm (0.4346 – 0.4353 in.)
Valve	Valve overall length – STD (Intake)	105.50 mm (4.1535 in.)
	Valve overall length – STD (Exhaust)	99.55 mm (3.9193 in.)
	Valve overall length – Limit (Intake)	104.80 mm (4.1260 in.)
	Valve overall length – Limit (Exhaust)	98.85 mm (3.8917 in.)
	Vale face angle	44.5°
	Stem diameter (Intake)	5.960 – 5.975 mm (0.2346 – 0.2352 in.)
	Stem diameter (Exhaust)	5.955 – 5.970 mm (0.2344 – 0.2350 in.)
	Stem oil clearance – STD (Intake)	0.025 – 0.058 mm (0.0010 – 0.0023 in.)
	Stem oil clearance – STD (Exhaust)	0.030 – 0.063 mm (0.0012 – 0.0025 in.)
	Stem oil clearance – Limit (Intake)	0.08 mm (0.0031 in.)
	Stem oil clearance – Limit (Exhaust)	0.10 mm (0.0039 in.)
	Margin thickness – STD	0.8 – 1.2 mm (0.031 – 0.047 in.)
	Margin thickness – Limit	0.5 mm (0.020 in.)
Valve spring	Squareness – Limit	2.0 mm (0.079 in.)
	Free length	44.43 mm (1.7492 in.)
	Installed tension at 34.4 mm (1.354 in.)	201 – 236 N (20.5 – 24.1 kgf, 45.2 – 53.1 lbf)

Valve lifter	Lifter diameter	27.975 – 27.985 mm (1.1014 – 1.1018 in.)
	Lifter bore diameter	28.000 – 28.021 mm (1.1024 – 1.1032 in.)
	Oil clearance – STD	0.015 – 0.046 mm (0.0006 – 0.0018 in.)
	Oil clearance – Limit	0.07 mm (0.0028 in.)
Manifold	Warpage – Limit	0.20 mm (0.0079 in.)
T–VIS valve	Warpage – Limit	0.20 mm (0.0079 in.)
VSV (for T–VIS)	Resistance (Cold)	33 – 39 Ω
Camshaft	Thrust clearance – STD	0.120 – 0.240 mm (0.0047 – 0.0094 in.)
	Thrust clearance – Limit	0.30 mm (0.0118 in.)
	Journal oil clearance – STD	0.0025 – 0.062 mm (0.0010 – 0.0024 in.)
	Journal oil clearance – Limit	0.08 mm (0.0031 in.)
	Journal diameter	26.959 – 26.975 mm (1.0614 – 1.0620 in.)
	Circle rounout – Limit	0.06 mm (0.0024 in.)
	Cam lobe height – STD	41.010 – 41.110 mm (1.6146 – 1.6185 in.)
	Cam lobe height – Limit	39.90 mm (1.5709 in.)
Cylinder block	Cylinder head surface warpage – Limit	0.05 mm (0.0020 in.)
	Cylinder bore diameter – STD (Mark 1)	86.000 – 86.010 mm (3.3858 – 3.3862 in.)
	Cylinder bore diameter – STD (Mark 2)	86.010 – 86.020 mm (3.3862 – 3.3866 in.)
	Cylinder bore diameter – STD (Mark 3)	86.020 – 86.030 mm (3.3866 – 3.3870 in.)
	Cylinder bore diameter – Limit	86.23 mm (3.3949 in.)
Piston and piston ring	Piston diameter – STD (Mark 1)	85.920 – 85.930 mm (3.3827 – 3.3831 in.)
	Piston diameter – STD (Mark 2)	85.930 – 85.940 mm (3.3831 – 3.3835 in.)
	Piston diameter – STD (Mark 3)	85.840 – 85.950 mm (3.3835 – 3.3839 in.)
	Piston oil clearance – STD	0.070 – 0.090 mm (0.0028 – 0.0035 in.)
	Piston oil clearance – Limit	0.11 mm (0.0043 in.)
	Piston ring groove clearance – No.1	0.040 – 0.080 mm (0.0016 – 0.00031 in.)
	Piston ring groove clearance – No.2	0.030 – 0.070 mm (0.0012 – 0.0028 in.)
	Piston ring end gap – STD (No.1)	0.330 – 0.550 mm (0.0130 – 0.0217 in.)
	Piston ring end gap – STD (No.2)	0.450 – 0.670 mm (0.0177 – 0.0264 in.)
	Piston ring end gap – STD (Oil)	0.200 – 0.600 mm (0.0079 – 0.0236 in.)
	Piston ring end gap – Limit (No.1)	0.85 mm (0.0335 in.)
	Piston ring end gap – Limit (No.2)	0.97 mm (0.0382 in.)
	Piston ring end gap – Limit (Oil)	0.90 mm (0.0354 in.)
Connecting rod	Thrust clearance – STD	0.160 – 0.312 mm (0.0063 – 0.0123 in.)
	Thrust clearance – Limit	0.35 mm (0.0138 in.)
	Connecting rod bearing center wall thickness	
	– STD (Mark 1)	1.484 – 1.488 mm (0.0584 – 0.0586 in.)
	– STD (Mark 2)	1.488 – 1.492 mm (0.0586 – 0.0587 in.)
	– STD (Mark 3)	1.492 – 1.496 mm (0.0587 – 0.0589 in.)
	Connecting rod oil clearance	
	– STD (STD)	0.024 – 0.055 mm (0.0009 – 0.0022 in.)
	– STD (U/S 0.25)	0.023 – 0.069 mm (0.0009 – 0.0027 in.)
	– Limit	0.08 mm (0.0031 in.)
	Rod bend – Limit per 100 mm (3.94 in.)	0.05 mm (0.0020 in.)
	Rod twist – Limit per 100 mm (3.94 in.)	0.15 mm (0.0059 in.)

Connecting rod (cont'd)	Bushing inside diameter	22.005 – 22.017 mm (0.8663 – 0.8668 in.)
	Piston pin diameter	21.997 – 22.009 mm (0.8660 – 0.8665 in.)
	Piston pin oil clearance – STD	0.005 – 0.011 mm (0.0002 – 0.0004 in.)
	Piston pin oil clearance – Limit	0.05 mm (0.0020 in.)
Crankshaft	Thrust clearance – STD	0.020 – 0.220 mm (0.0008 – 0.0087 in.)
	Thrust clearance – Limit	0.30 mm (0.0118 in.)
	Thrust washer thickness	2.440 – 2.490 mm (0.0961 – 0.0980 in.)
	Main journal oil clearance	
	– STD (No.3 – STD)	0.025 – 0.044 mm (0.0010 – 0.0017 in.)
	– STD (No.3 – U/S 0.25)	0.021 – 0.061 mm (0.0008 – 0.0024 in.)
	– STD (Others – STD)	0.015 – 0.034 mm (0.0006 – 0.0013 in.)
	– STD (Others – U/S 0.25)	0.029 – 0.069 mm (0.0011 – 0.0027 in.)
	– Limit	0.08 mm (0.0031 in.)
	Main journal diameter – STD	54.988 – 55.003 mm (2.1653 – 2.1655 in.)
	Main journal diameter – U/S 0.25	54.745 – 54.755 mm (2.1553 – 2.1557 in.)
	Main bearing center wall thickness	
	– STD (No.3 – Mark 1)	1.992 – 1.995 mm (0.0784 – 0.0785 in.)
	– STD (No.3 – Mark 2)	1.995 – 1.998 mm (0.0785 – 0.0787 in.)
	– STD (No.3 – Mark 3)	1.998 – 2.001 mm (0.0787 – 0.0788 in.)
	– STD (No.3 – Mark 4)	2.001 – 2.004 mm (0.0788 – 0.0789 in.)
	– STD (No.3 – Mark 5)	2.004 – 2.007 mm (0.0789 – 0.0790 in.)
	– STD (Others – Mark 1)	1.997 – 2.000 mm (0.0786 – 0.0787 in.)
	– STD (Others – Mark 2)	2.000 – 2.003 mm (0.0787 – 0.0789 in.)
	– STD (Others – Mark 3)	2.003 – 2.006 mm (0.0789 – 0.0790 in.)
	– STD (Others – Mark 4)	2.006 – 2.009 mm (0.0790 – 0.0791 in.)
	– STD (Others – Mark 5)	2.009 – 2.012 mm (0.0791 – 0.0792 in.)
	Crank pin diameter – STD	47.985 – 48.000 mm (1.8892 – 1.8898 in.)
	Crank pin diameter – U/S 0.25	47.745 – 47.755 mm (1.8797 – 1.8801 in.)
	Circle runout – Limit	0.06 mm (0.0024 in.)
	Main journal taper and out–of–round (Limit)	0.02 mm (0.0008 in.)
	Crank pin taper and out–of–round (Limit)	0.02 mm (0.0008 in.)

S30C8–02

TORQUE SPECIFICATION

Part tightened	N–m	kgf–cm	ft–lbf
Cylinder head cover x Cylinder head	2.5	25	21 in.·lbf
Throttle body x Intake manifold	19	195	14
Intake air connector stay x Intake manifold	19	195	14
Intake air connector stay x Cylinder head	7.8	80	69 in.·lbf
Intake air connector x Intake air connector stay	19	195	14
Distributor x Cylinder head	39	400	29
Spark plug x Cylinder head	18	180	13
Oil pump pulley x Oil pump drive shaft	35	355	26
No.2 idler pulley x Cylinder block	43	440	32
No.1 idler pulley x Cylinder head	52	530	38
Crankshaft pulley x Crankshaft	108	1,100	80
Camshaft timing pulley x Camshaft	59	600	43
Camshaft timing pulley x Camshaft (For use with SST)	41	420	30
Timing belt tensioner x Cylinder head	21	210	15

Cylinder head x Cylinder block (1 st)	49	500	36
Cylinder head x Cylinder block (2nd)	Turn 90°		
Camshaft bearing cap x Cylinder head	19	190	14
No.3 timing belt cover x Cylinder head	8.8	90	78 in.·lbf
Delivery pipe x Cylinder head	19	195	14
Intake manifold x Cylinder head	19	195	14
Intake manifold stay x Intake manifold	25	260	19
Intake manifold stay x Cylinder block	25	260	19
Water by–pass pipe x Water pump cover	7.8	80	69 in.·lbf
Oil cooler x Oil cooler bracket (Relief valve)	78	800	58
Oil cooler x Cylinder block (Nut)	7.8	80	69 in.·lbf
Water outlet housing x Cylinder head	39	400	29
EGR valve x Intake manifold	19	195	14
EGR pipe x Cylinder head	25	260	19
RH front engine hanger x Cylinder head	39	400	29
RH front engine hanger x Mounting bracket	61	620	45
LH engine hanger x Cylinder head (12 mm head)	13	130	9
LH engine hanger x Cylinder head (14 mm head)	19	195	14
Exhaust manifold x Cylinder head	52	530	38
Cold start injector x Intake manifold	5.9	60	52 in.·lbf
Cold start injector pipe x Cold start injector	12	125	9
Cold start injector pipe x Delivery pipe	12	125	9
Main TWC x Turbine outlet elbow	29	300	22
TWC stay x Main TWC	59	600	43
TWC stay x Cylinder block	59	600	43
Oil nozzle x Cylinder block	9.1	93	81 in.·lbf
Main bearing cap x Cylinder block	59	600	43
Connecting rod cap x Connecting rod	67	680	49
Rear oil seal retainer x Cylinder block	9.3	95	82 in.·lbf
Knock sensor x Cylinder block	37	380	27
Oil cooler bracket x Cylinder block	7.8	80	69 in.·lbf
Water pump x Cylinder block (10 mm heady	7.8	80	69 in.·lbf
Water pump x Cylinder block (12 mm head)	27	275	20 in.·lbf
Alternator bracket x Cylinder block	43	440	32
Rear end plate x Cylinder block	9.3	95	82 in.·lbf
Flywheel x Crankshaft	108	1,100	80
Clutch cover x Flywheel	19	195	14
Transaxle x Cylinder block	64	650	47
Transaxle x Rear end plate	46	470	34
Heater water pipe x Cylinder block	46	470	34
No.2 rear end plate x Cylinder block	9.3	95	82 in.·lbf
No.2 rear end plate x Transaxle	19	195	14
Stiffener plate x Cylinder block	37	380	27
Stiffener plate x Transaxle	37	380	27
Starter x Rear end plate	39	400	29
Drive shaft bearing bracket x Cylinder block	64	650	47
Drive shaft bearing stay x Bearing stay	75	770	56
RH engine mounting bracket x Cylinder block	61	620	45
RH engine mounting Insulator x Mounting Bracket	52	530	38

RH engine mounting Insulator x Body	78	800	58
RH engine mounting stay x RH engine hanger	73	740	54
RH engine mounting stay x Mounting insulator	73	740	54
LH engine mounting bracket x Transaxle	52	530	38
LH engine mounting insulator x Transaxle	52	530	38
LH engine mounting insulator x Mounting bracket (upper side)	73	740	54
LH engine mounting insulator x Mounting bracket (lower side)	63	650	47
LH engine mounting insulator x Body	78	800	58
LH engine mounting stay x Mounting insulator	73	740	54
LH engine mounting stay x Transaxle	25	250	47
Front engine mounting bracket x Transaxle	77	790	57
Front engine mounting insulator x Body	73	740	54
Front engine mounting insulator x Mounting bracket	96	980	70
Rear engine mounting bracket x Transaxle (rear side)	77	790	57
Rear engine mounting bracket x Transaxle (RH side)	39	400	29
Rear engine mounting insulator x Body	64	650	47
Rear engine mounting insulator x Mounting bracket	87	890	64
Rear suspension lower crossmember x Body	113	1,150	83
Lateral control rod x Body	35	360	26
Lateral control rod x LH engine mounting insulator	37	380	27
A/C idler pulley bracket x Cylinder block (12 mm heady	25	250	18
A/C idler pulley bracket x Cylinder block 0 4 mm head)	27	275	20
A/C idler pulley bracket x RH engine hanger	37	375	27
A/C compressor x Cylinder block	25	250	18
Clutch release cylinder x Transaxle	12	120	9
Front exhaust pipe x Main TWC	62	630	46
Front exhaust pipe support bracket x Suspension crossmember	21	210	15
Suspension member damper x Suspension crossmember	21	210	15
Tailpipe x Body bracket	66	670	48
Tailpipe x Front exhaust pipe	43	440	32
Tailpipe bracket x Front exhaust pipe bracket	19	190	14
Tailpipe x Body bracket	66	670	48
Lower suspension brace x Body	73	740	54
Upper suspension brace x Body (Bolt)	73	740	54
Upper suspension brace x Body (Nut)	64	650	47

TIMING BELT

COMPONENTS

EG0W7–01

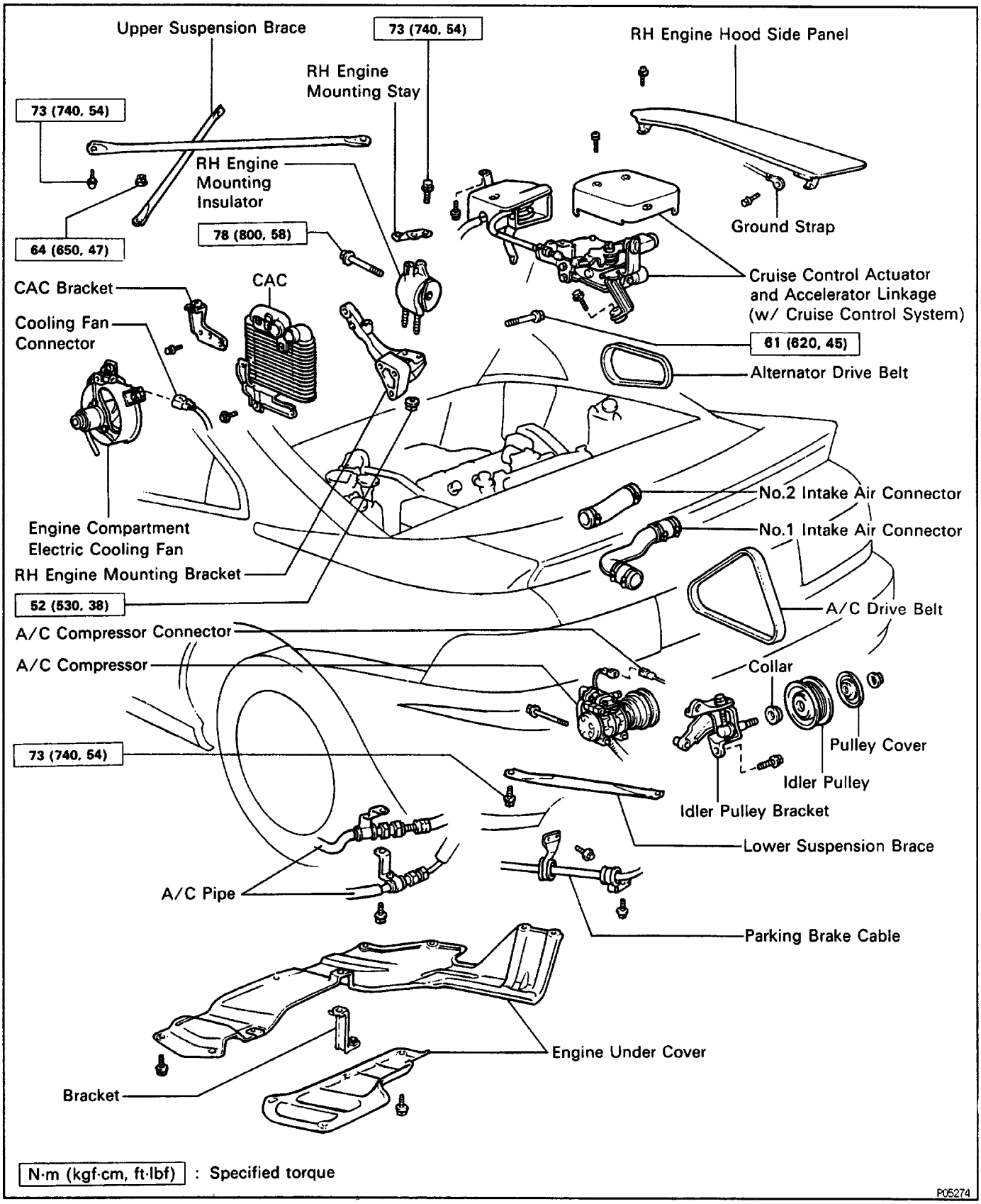

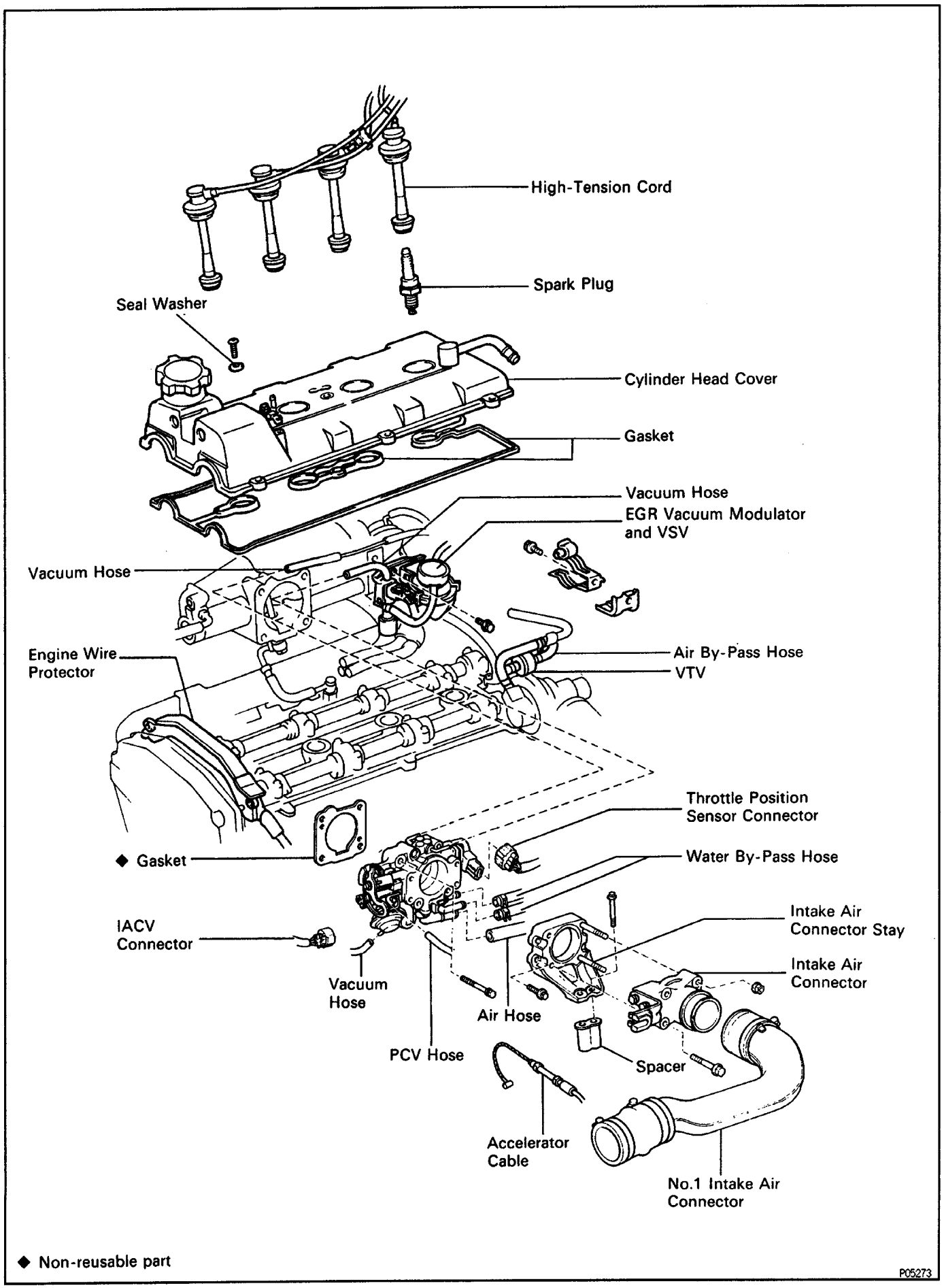
High-Tension Cord
Spark Plug
Seal Washer
Cylinder Head Cover
Gasket
Vacuum Hose
EGR Vacuum Modulator and VSV
Vacuum Hose
Engine Wire Protector
Air By-Pass Hose
VTV
Throttle Position Sensor Connector
◆ Gasket
Water By-Pass Hose
IACV Connector
Intake Air Connector Stay
Intake Air Connector
Vacuum Hose
Air Hose
PCV Hose
Spacer
Accelerator Cable
No.1 Intake Air Connector
◆ Non-reusable part
P05273

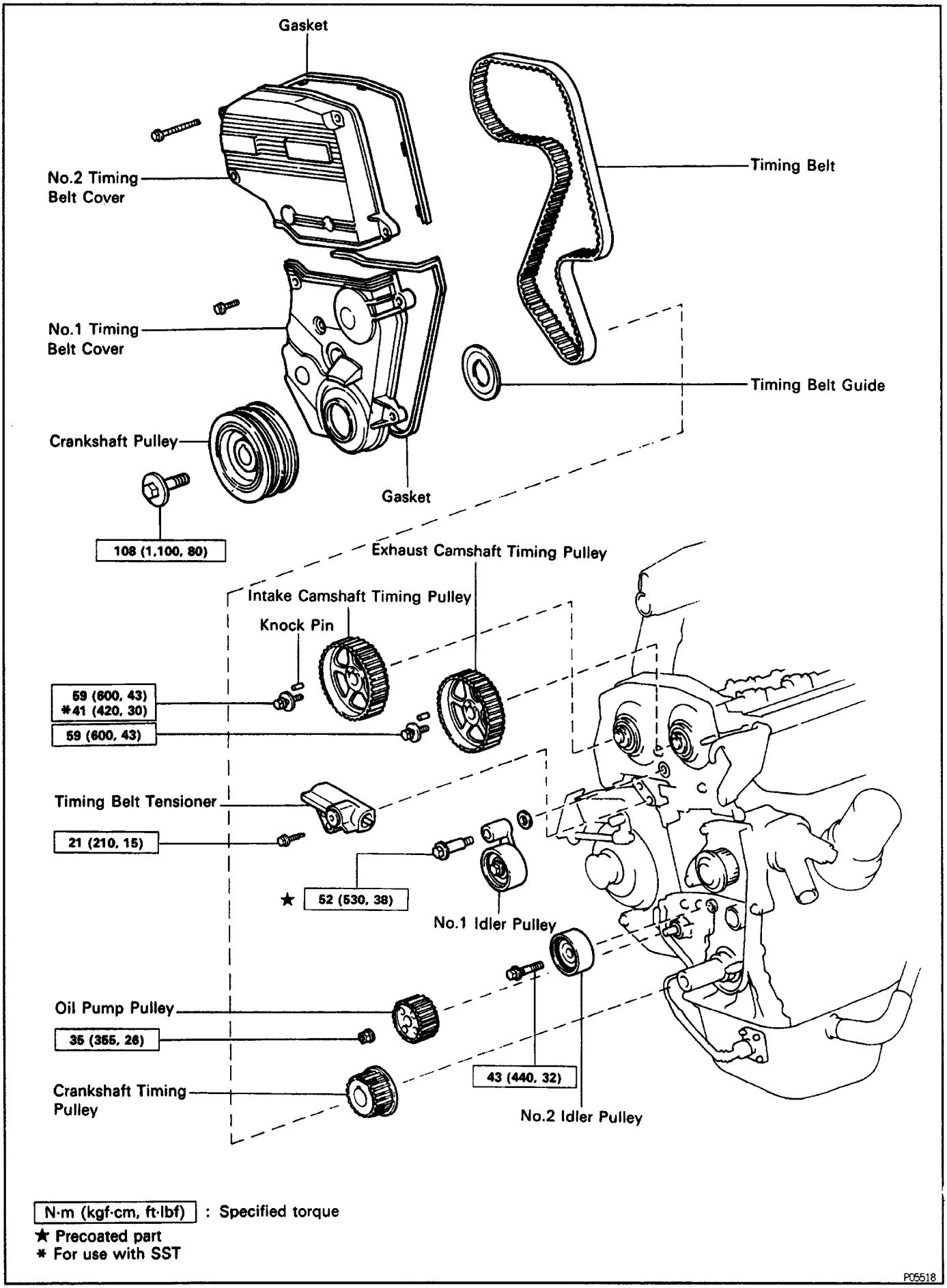
Gasket
No.2 Timing Belt Cover
Timing Belt
No.1 Timing Belt Cover
Timing Belt Guide
Crankshaft Pulley
Gasket
108 (1,100, 80)
Exhaust Camshaft Timing Pulley
Intake Camshaft Timing Pulley
Knock Pin
59 (600, 43)
*41 (420, 30)
59 (600, 43)
Timing Belt Tensioner
21 (210, 15)
★ 52 (530, 38)
No.1 Idler Pulley
Oil Pump Pulley
35 (355, 26)
Crankshaft Timing Pulley
43 (440, 32)
No.2 Idler Pulley
N·m (kgf·cm, ft·lbf) : Specified torque
★ Precoated part
* For use with SST
P05518

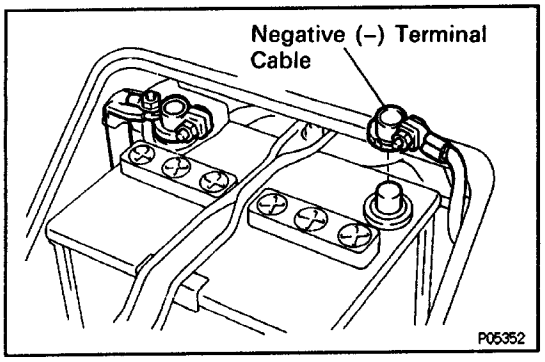

TIMING BELT REMOVAL

(See Components for Removal and Installation)

1. DISCONNECT CABLE FROM NEGATIVE TERMINAL OF BATTERY

CAUTION: Turn the ignition switch to "LOCK". Disconnect the negative terminal from the battery. Wait at least 20 seconds before proceeding with work.

2. REMOVE ENGINE UNDER COVERS

3. REMOVE RH ENGINE HOOD SIDE PANEL

4. REMOVE UPPER SUSPENSION BRACE

Remove the two bolts, two nuts and upper brace.

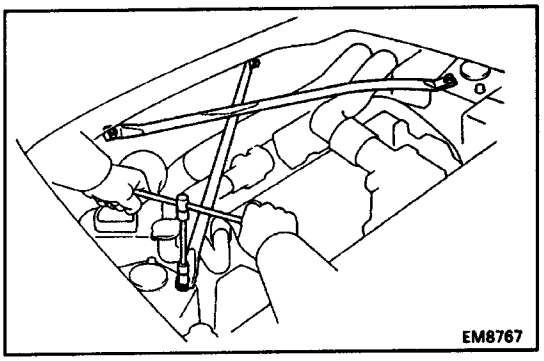

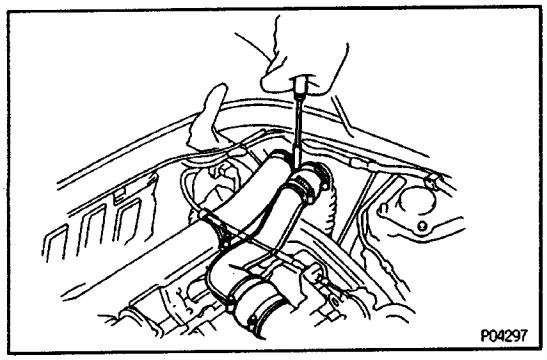

5. REMOVE NO.1 AND NO.2 INTAKE AIR CONNECTORS

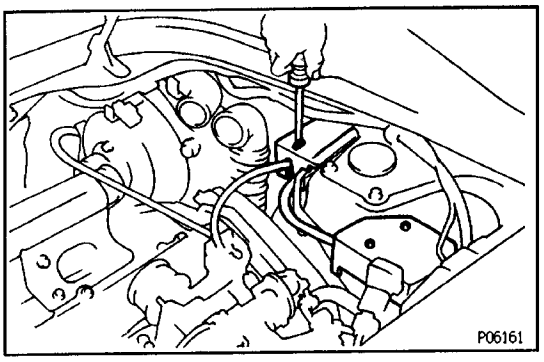

6. (w/ CRUISE CONTROL SYSTEM) REMOVE CRUISE CONTROL ACTUATOR AND ACCELERATOR LINKAGE

7. (w/o CRUISE CONTROL SYSTEM) DISCONNECT ACCELERATOR LINKAGE FROM THROTTLE BODY

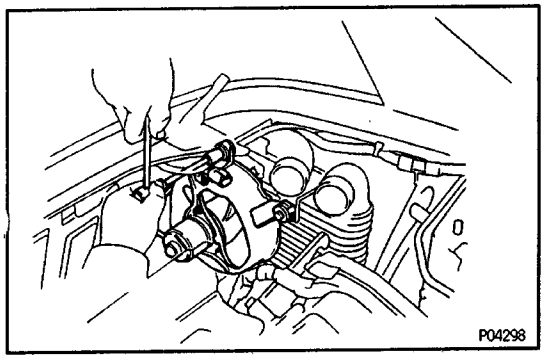

8. REMOVE ENGINE COMPARTMENT ELECTRIC COOLING FAN

(a) Disconnect the cooling fan connector.

(b) Loosen the three bolts, and remove the cooling fan.

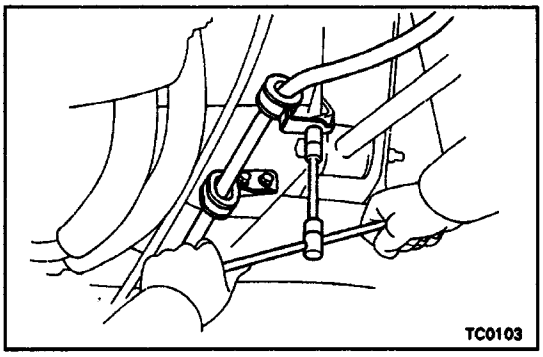

9. DISCONNECT A/C COMPRESSOR FROM ENGINE

(a) Remove the three clamp bolts, and disconnect the parking brake cable.

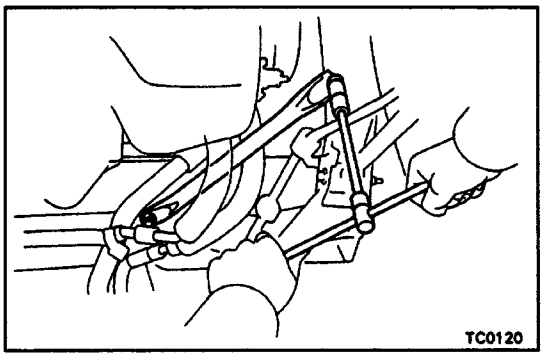

(b) Remove the two bolts and lower suspension brace.

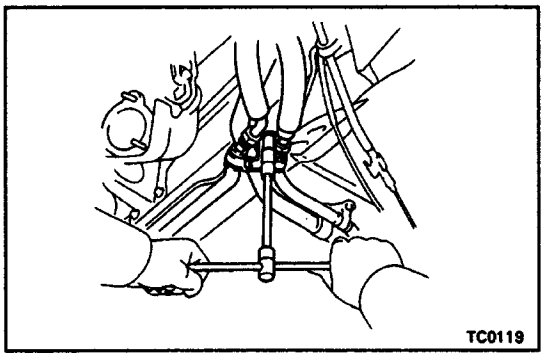

(c) Remove the clamp nut, and disconnect the two A/C pipes.

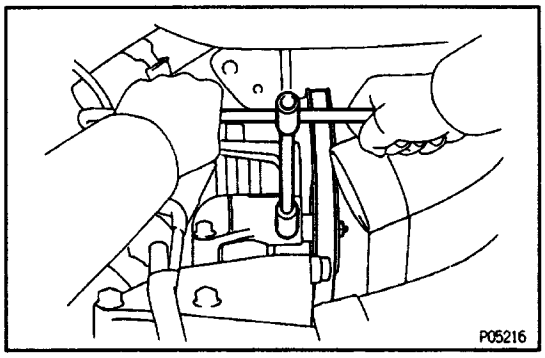

(d) Loosen the idler pulley nut.
(e) Loosen the adjusting bolt, and remove the drive belt.

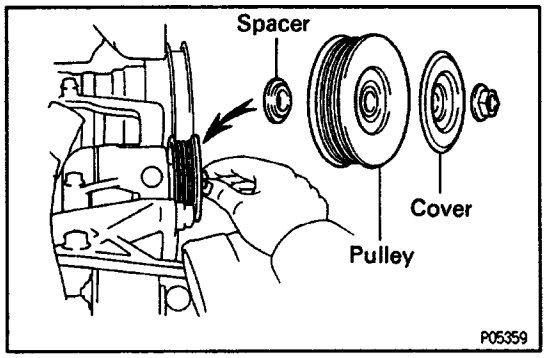

(f) Remove the nut, pulley cover, idler pulley and spacer.

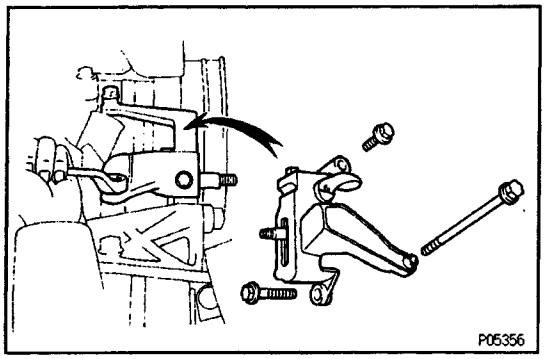

(g) Disconnect the A/C compressor connector.
(h) Remove the three bolts and idler pulley bracket.

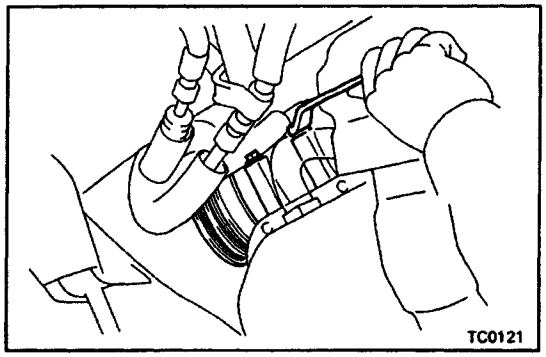

(i) Remove the two bolts, and disconnect the A/C com–pressor from the engine.

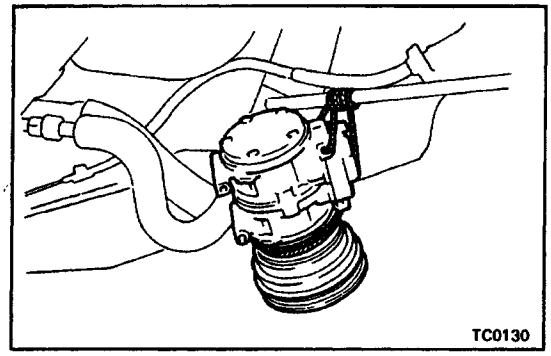

HINT: Suspend the A/C compressor to strut rod with a string.

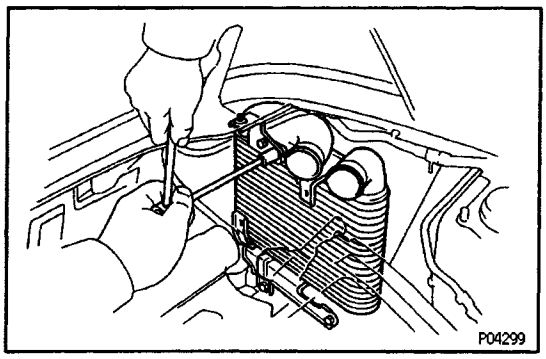

10. REMOVE CAC
(a) Remove the two bolts holding the CAC to the upper bracket.
(b) Remove the three bolts, upper bracket and CAC.
11. REMOVE RH REAR WHEEL

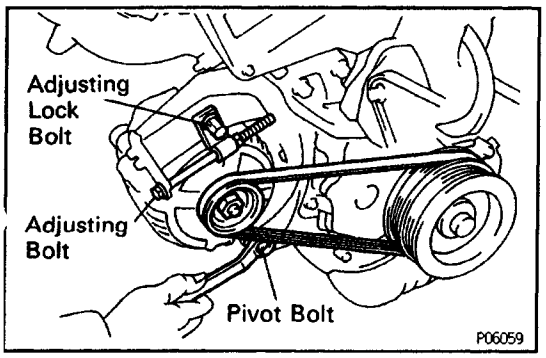

12. REMOVE ALTERNATOR DRIVE BELT
(a) Loosen the pivot bolt and adjusting lock bolt.
(b) Loosen the adjusting bolt, and remove the drive belt.

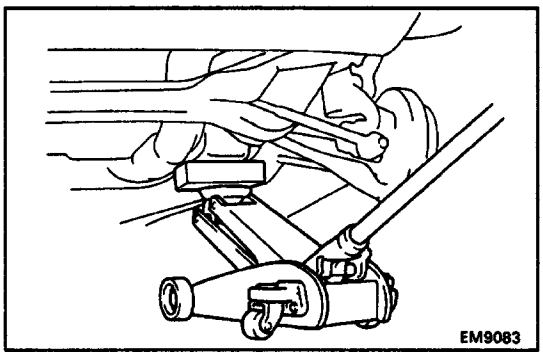

13. SLIGHTLY JACK UP ENGINE

Raise the engine enough to remove the weight from the engine mounting on the right side.

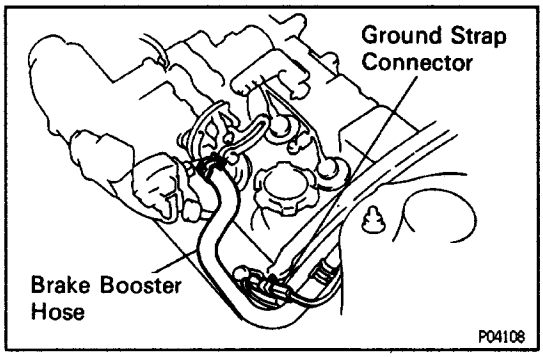

14. DISCONNECT GROUND STRAP CONNECTOR

15. DISCONNECT BRAKE BOOTER VACUUM HOSE

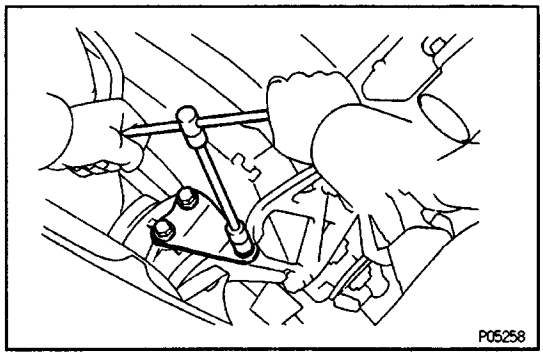

16. REMOVE RH ENGINE MOUNTING STAY

Remove the three bolts and mounting stay.

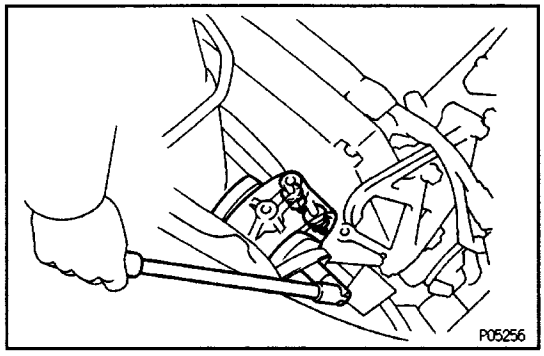

17. REMOVE RH ENGINE MOUNTING INSULATOR

Remove the two nuts, through bolt and mounting insulator.

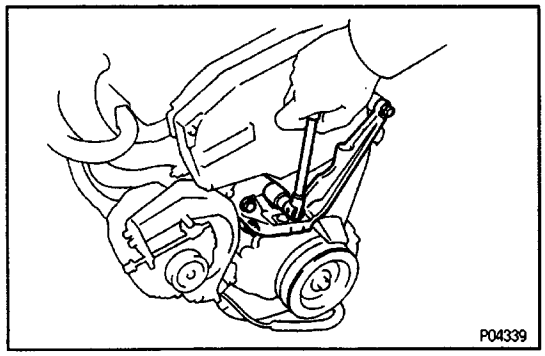

18. REMOVE RH ENGINE MOUNTING BRACKET

(a) Remove the four bolts.

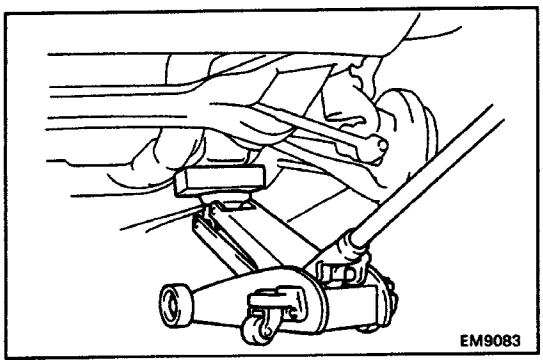

(b) Remove the mounting bracket.

HINT: Raise the engine as far as it will go, and remove the mounting bracket.

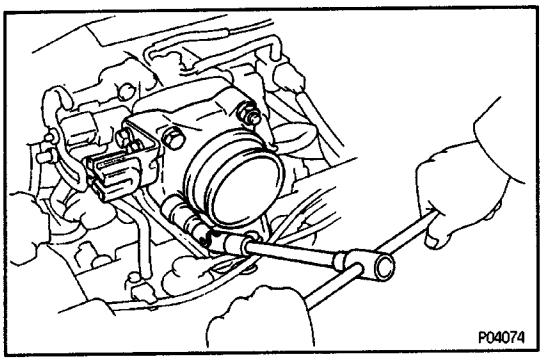

19. REMOVE INTAKE AIR CONNECTOR

Remove the two bolts, and two nuts and intake air connector.

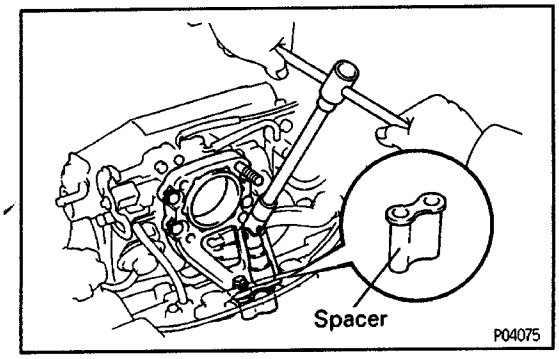

20. REMOVE INTAKE AIR CONNECTOR STAY

(a) Remove the six bolts and intake air connector stay.

(b) Remove the spacer.

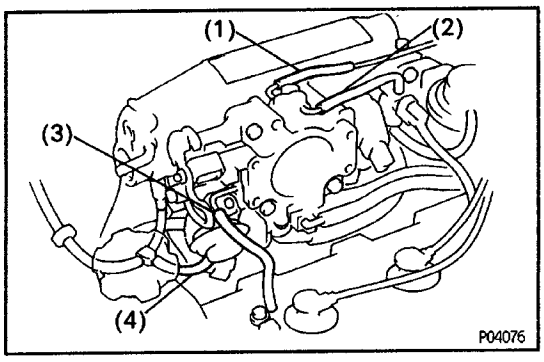

21. REMOVE THROTTLE BODY

(a) Disconnect the following connector:

- Throttle position sensor connector
- IACV connector

(b) Disconnect the following hoses:

(1) Vacuum hose from port ”P” of throttle body

(2) Vacuum hose from port ”E” of throttle body

(3) PCV hose from port PCV of throttle body

(4) Vacuum hose from throttle body opener

(c) Remove the four bolts, and disconnect the throttle body from the intake manifold.

(d) Remove the throttle body gasket.

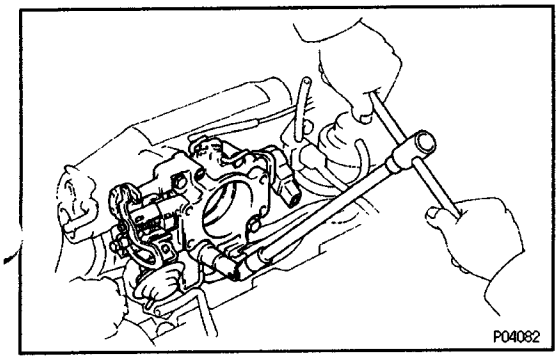

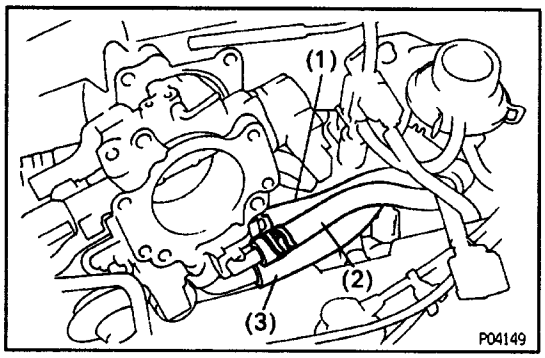

(e) Disconnect the following hoses from the throttle body, and remove the throttle body:
(1) Water by–pass hose (f r–om upper side of No. 1 air tube)
(2) Water by–pass hose (from lower side of No. 1 air tube)
(3) Air hose (from No. 1 air tube)

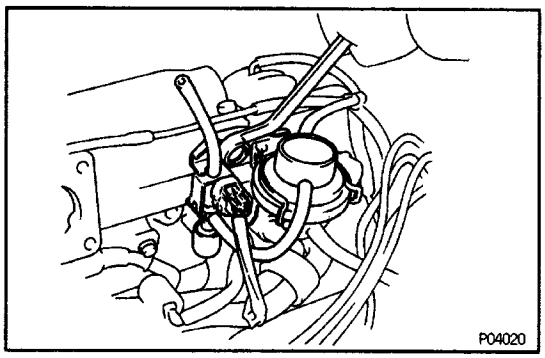

22. REMOVE CYLINDER HEAD COVER

(a) Remove the bolt, and disconnect the VSV and EGR vacuum modulator assembly from the intake mani–fold.

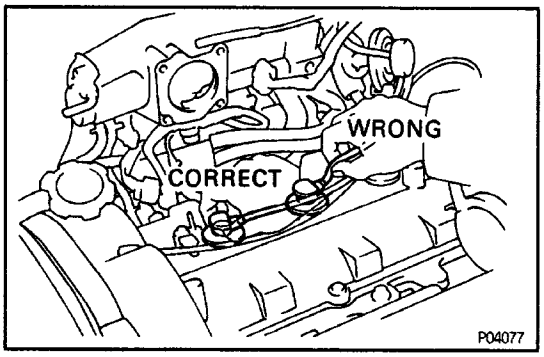

(b) Disconnect the high – tension cords at the rubber boot. Do not pull on the high–tension cords.
NOTICE: Pulling on or bending the cords may damage the conductor inside.

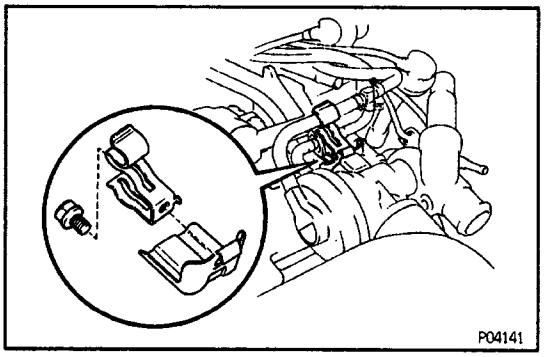

(c) Disconnect the hose and VTV from the clamps.
(d) Remove the bolt and two clamps.

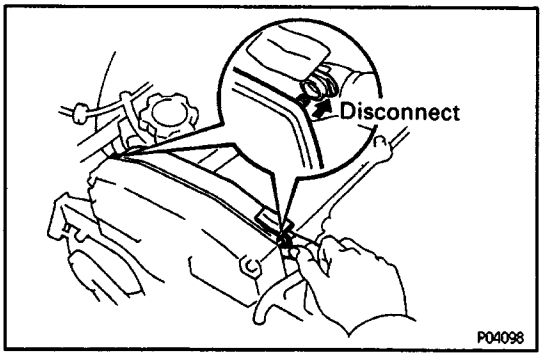

(e) Disconnect the engine wire protector between the No. 3 timing belt cover and cylinder head cover.

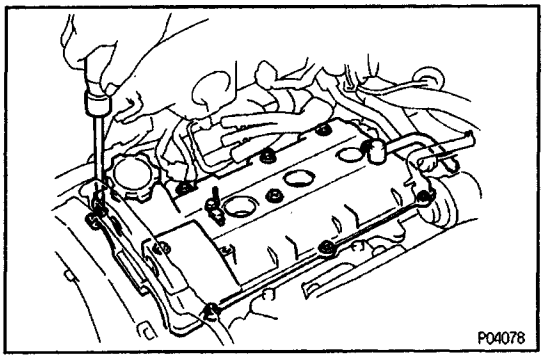

(f) Remove the ten screws, seal washers, bolts, head cover and two gaskets.

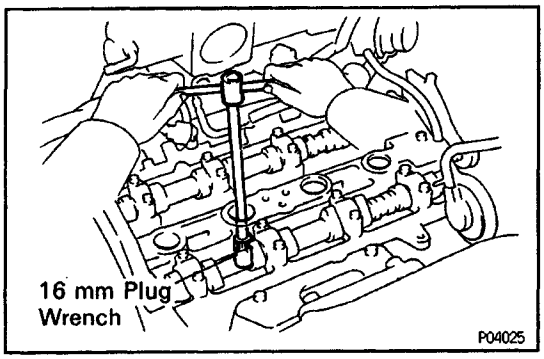

23. REMOVE SPARK PLUGS

Using a 16 mm plug wrench, remove the four spark plugs.

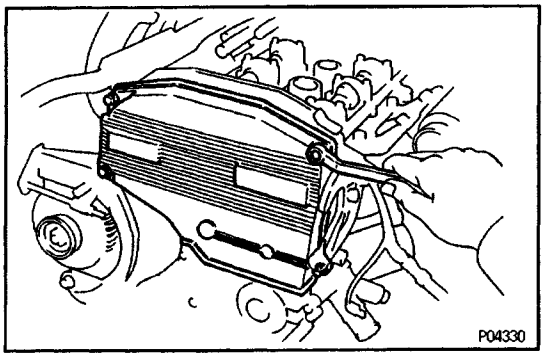

24. REMOVE No.2 TIMING BELT COVER

Remove the five bolts, timing belt cover and gasket.

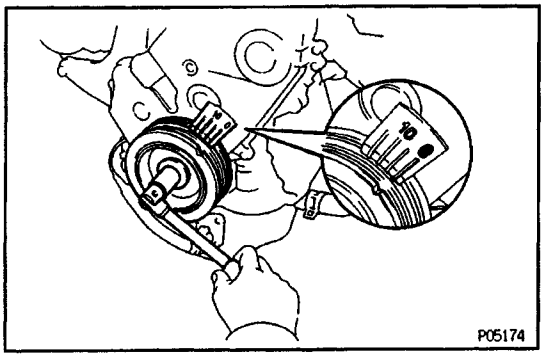

25. SET NO.1 CYLINDER TO TDC/COMPRESSION

(a) Turn the crankshaft pulley and align its groove with timing mark ”0” of the No.1 timing belt cover.

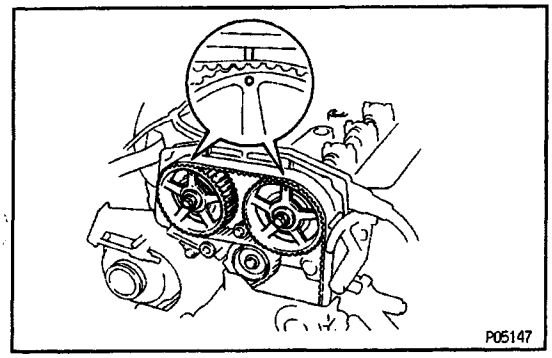

(b) Check that the timing marks of the camshaft timing pulleys are aligned with the timing marks of the No.3 timing belt cover.

If not, turn the crankshaft one revolution (360˚).

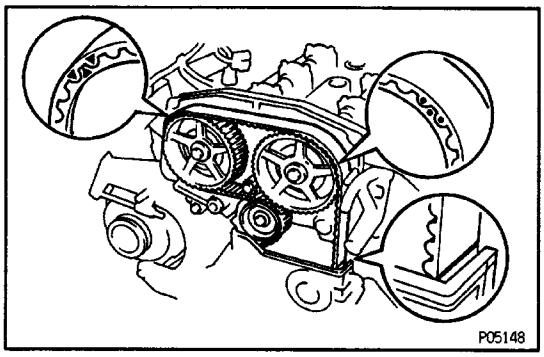

26. DISCONNECT TIMING BELT FROM CAMSHAFT TIMING PULLEYS

HINT:

- (Re–using timing belt)
  Place matchmarks on the timing belt and cam–shaft timing pulleys, and place a matchmark on the timing belt to match the end of the No.1 timing belt cover.

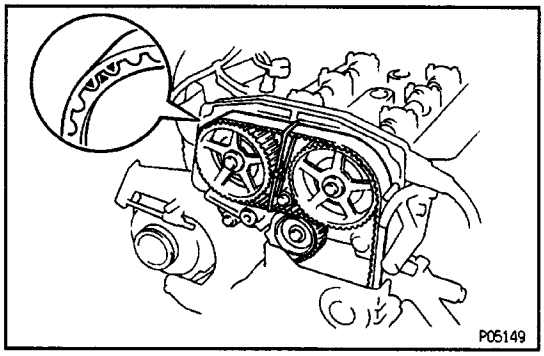

- (When replacing timing belt tensioner only)
  To avoid meshing of the timing belt and timing pulley, secure one with a string. And place the matchmarks on the timing belt and RH camshaft timing pulley.

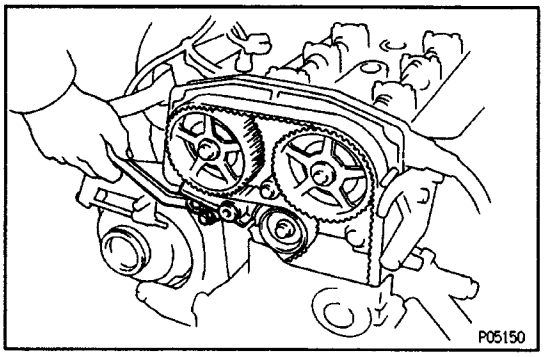

(a) Remove the two bolts and timing belt tensioner.

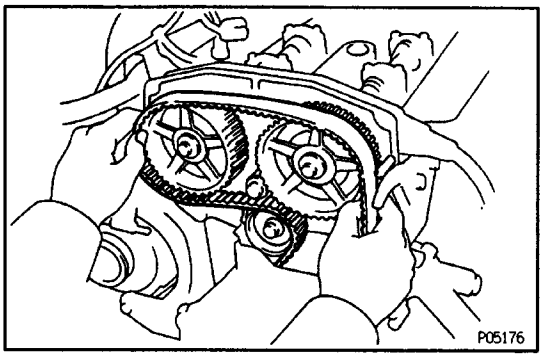

(b) Disconnect the timing belt from the camshaft timing pulleys.

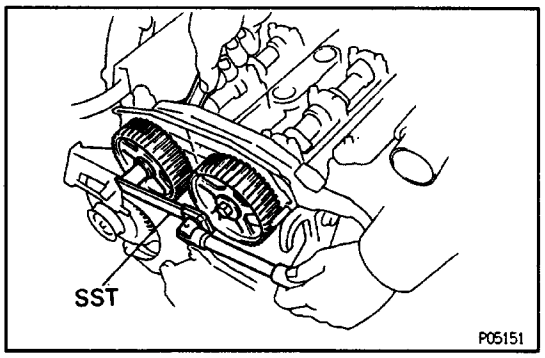

27. REMOVE CAMSHAFT TIMING PULLEYS

(a) Hold the hexagon wrench head portion of the cam–shaft with a wrench, and loosen the pulley bolt.
HINT (Intake camshaft timing pulley): Use SST.
, SST 09249–63010

(b) Remove the bolt, timing pulley and pin. Remove the two timing pulleys.
HINT: Arrange the intake and exhaust timing pulleys.

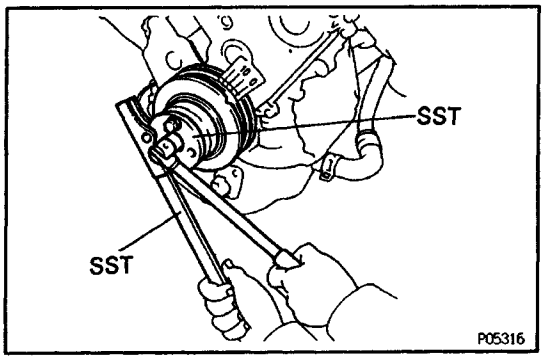

28. REMOVE CRANKSHAFT PULLEY

(a) Using SST, remove the pulley bolt.
SST 09213–54015 (90119–08216),
09330–00021

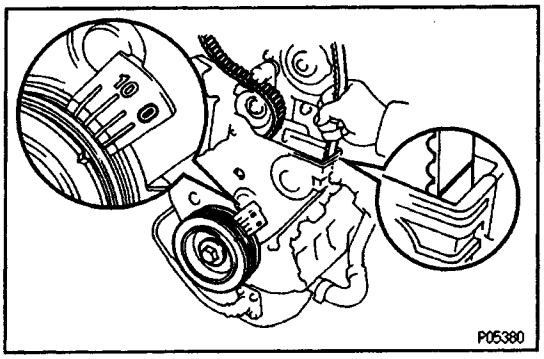

HINT (When re–using timing belt): After loosening the crankshaft pulley bolt, check that the timing belt rnatchmark aligns with the end of the No. 1 timing belt
cover when the crankshaft pulley groove is aligned with the timing mark ”0” of the No. 1 timing belt cover. If the matchmark does not align, align as follows:

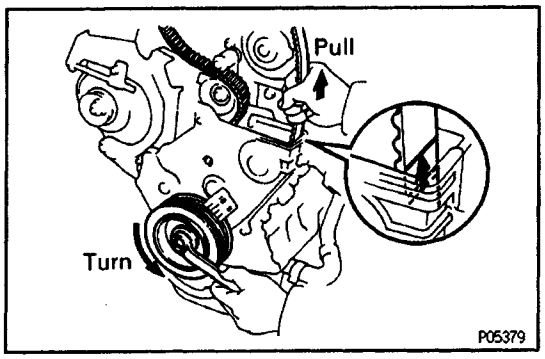

(When matchmark is out of alignment on clockwise)

- Align the matchmark by pulling the timing belt up on the water pump pulley side while turning the crankshaft pulley counterclockwise.

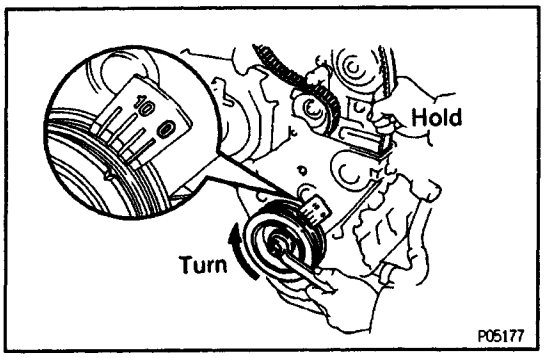

- After aligning the matchmark, hold the timing belt. And turn the crankshaft pulley clockwise, and align its groove with timing mark ”0” of the No.1 timing belt cover.

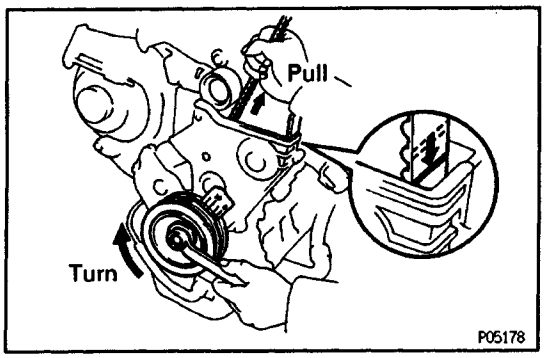

(When matchmark is out of alignment on counter–clockwise)

- Align the matchmark by pulling the timing belt up on the No.1 idler pulley side while turning the crankshaft pulley clockwise.

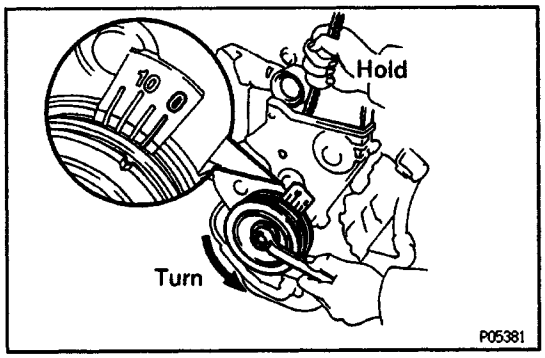

- After aligning the matchmark, hold the timing belt. And turn the crankshaft pulley counter–clockwise, and align its groove with timing mark' 0" of the No.1 timing belt cover.

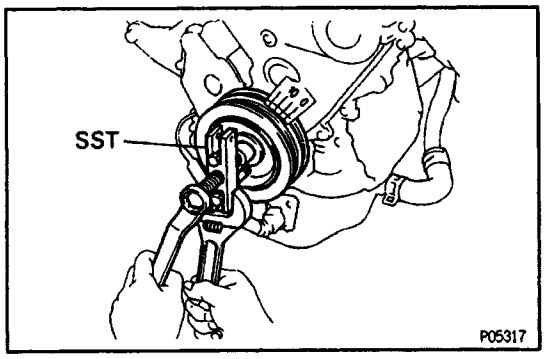

(b) Using SST, remove the pulley.
SST 09213–31021
HINT (When re–using timing belt): Remove the pulley without turning it.

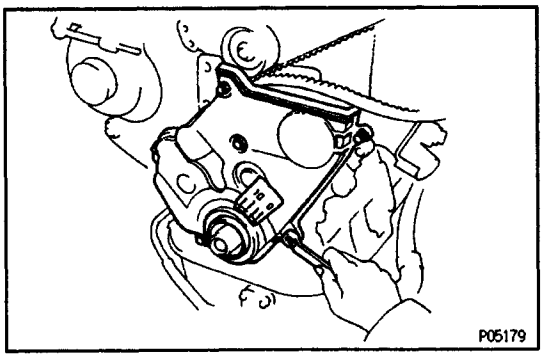

29. REMOVE NO.1 TIMING BELT COVER
Remove the six bolts, timing belt cover and gasket.

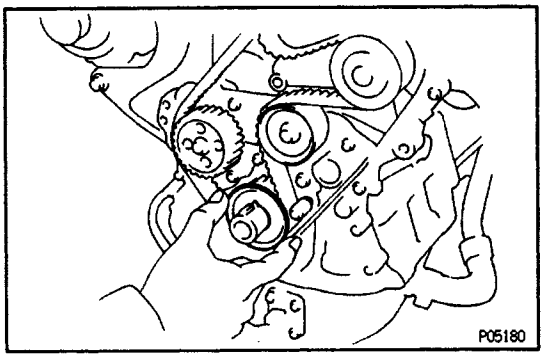

30. REMOVE TIMING BELT GUIDE

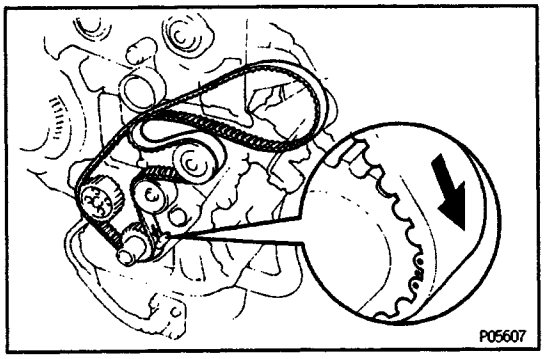

31. REMOVE TIMING BELT
HINT (When re–using timing belt): Draw a direction arrow on the timing belt (in the direction of engine revolution), and place matchmarks on the timing bell and crankshaft timing pulley.

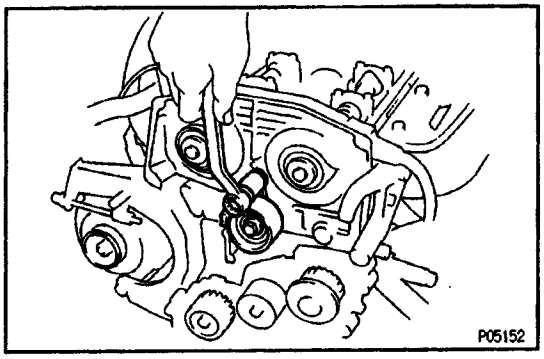

32. REMOVE N0.1 IDLER PULLEY

Remove the pivot bolt, pulley and plate washer.

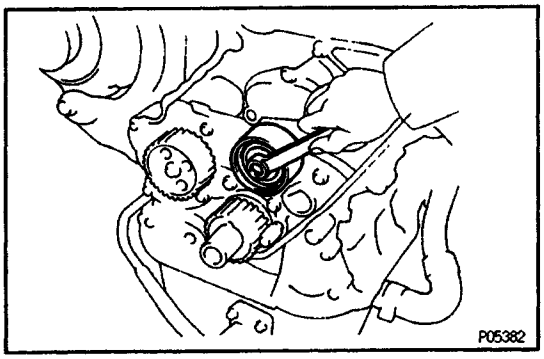

33. REMOVE No.2 IDLER PULLEY

Remove the bolt and pulley.

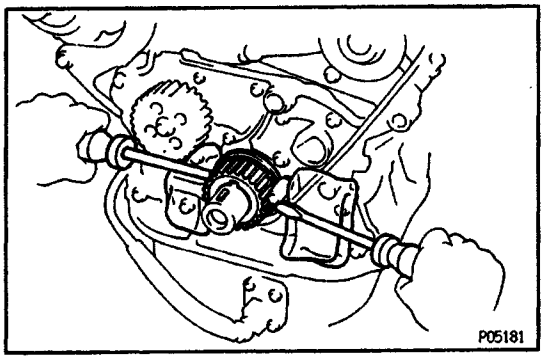

34. REMOVE CRANKSHAFT TIMING PULLEY

If the pulley cannot be removed by hand, use two screwdrivers.

HINT: Position shop rags as shown to prevent damage.

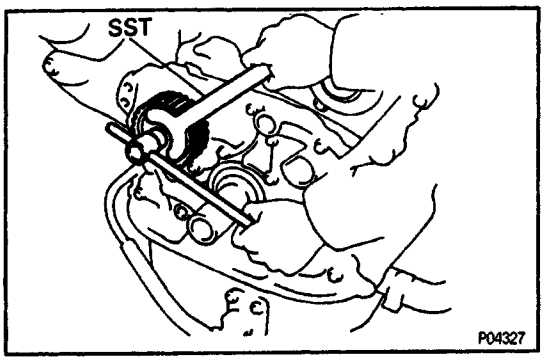

35. REMOVE OIL PUMP PULLEY

Using SST, remove the nut and pulley.

SST 09616–30011

TIMING BELT COMPONENTS INSPECTION

1. INSPECT TIMING BELT

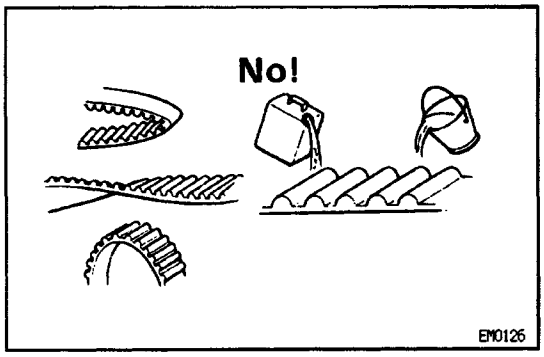

NOTICE:

- Do not bend, twist or turn the timing belt inside out.
- Do not allow the timing belt to come into contact with oil, water or steam.
- Do not utilize timing belt tension when installing or removing the mounting bolt of the camshaft timing pulley.

If there are any defects as shown in the illustration, check the following points:

(a) Premature parting

- Check the proper installation.
- Check the timing cover gasket for damage and proper installation.

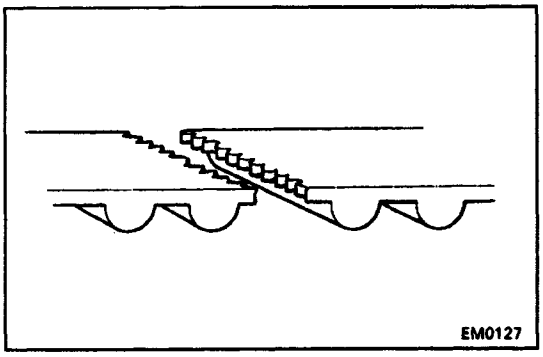

(b) If the belt teeth are cracked or damaged, check to see if either camshaft or water pump is locked.

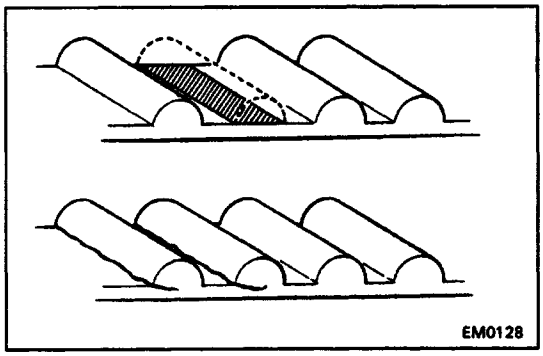

(c) If there is noticeable wear or cracks on the belt face, check to see if there are nicks on the side of the idler pulley lock.

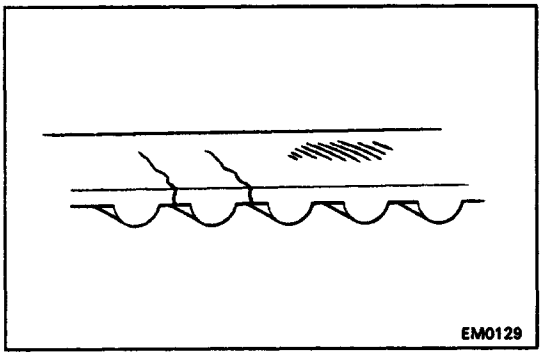

(d) If there is wear or damage on only one side of the belt, check the belt guide and the alignment of each pulley.

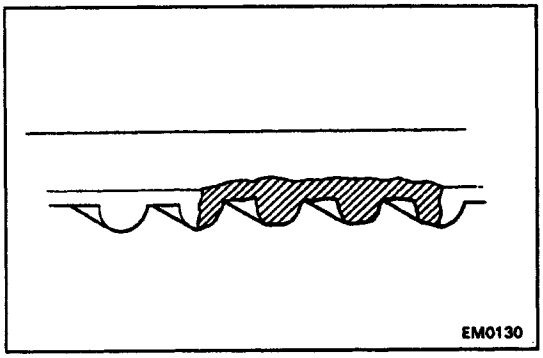

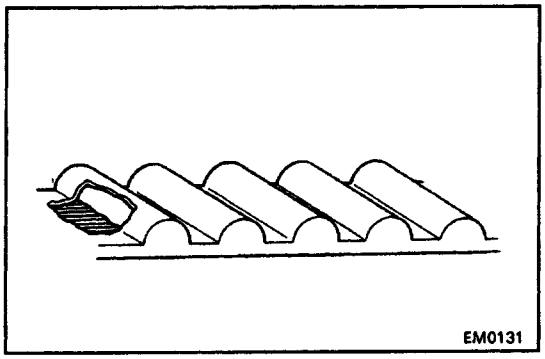

(e) If there is noticeable wear on the belt teeth, check the timing cover for damage, correct gasket installation, and the foreign material on the pulley teeth.
If necessary, replace the timing belt.

2. INSPECT IDLER PULLEYS

Check that the idler pulley turns smoothly.
If necessary, replace the idler pulley.

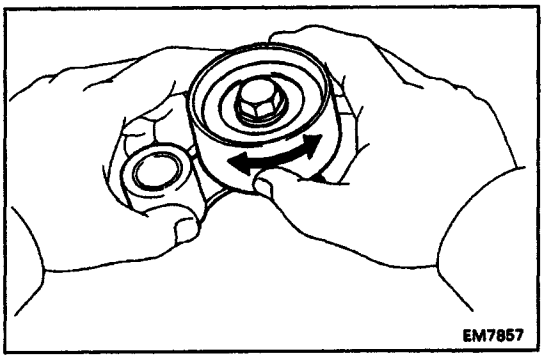

3. INSPECT TIMING BELT TENSIONER

(a) Visually check tensioner for leakage.
HINT: A small trace of oil on the push rod seal is permissible.
If leakage is found, replace the tensioner.

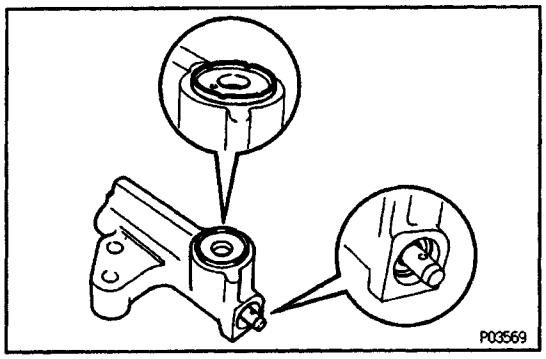

(b) Hold the tensioner with both hands, and push the push rod firmly against the floor or wall to check that it doesn't move.
If push rod moves, replace the tensioner.

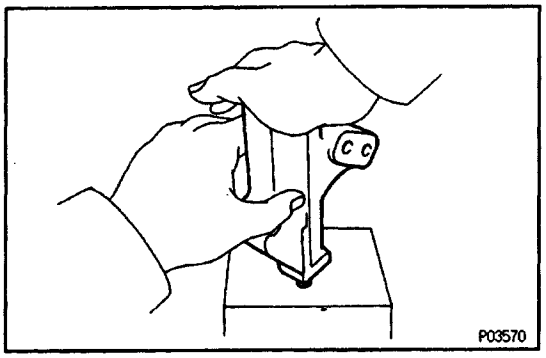

(c) Measure the protrusion of the push rod from the housing end.
Protrusion:
8.5 – 9.5 mm (0.335 – 0.374 in.)
If the protrusion is not as specified, replace the tensioner.

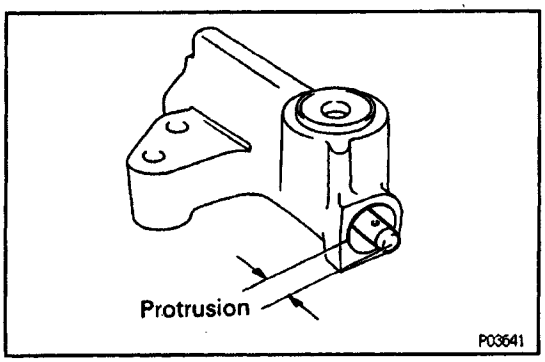

EG0WA–01

TIMING BELT INSTALLATION

(See Components for Removal and Installation)

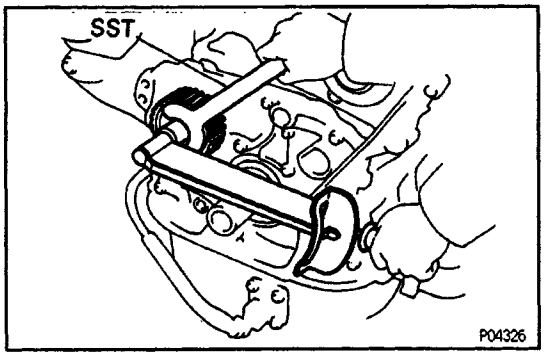

1. INSTALL OIL PUMP PULLEY

(a) Align the cutouts of the pulley and shaft, and slide on the pulley.

(b) Using SST, install the pulley nut.

SST 09616–30011

Torque: 35 N–m (355 kgf–cm, 26 ft–lbf)

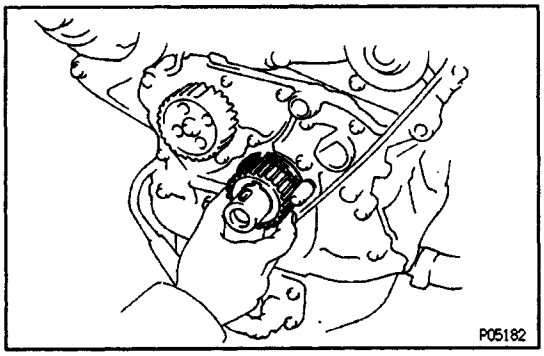

2. INSTALL CRANKSHAFT TIMING PULLEY

(a) Align the timing pulley set key with the key groove of the pulley.

(b) Slide on the timing pulley, facing the flange side inward.

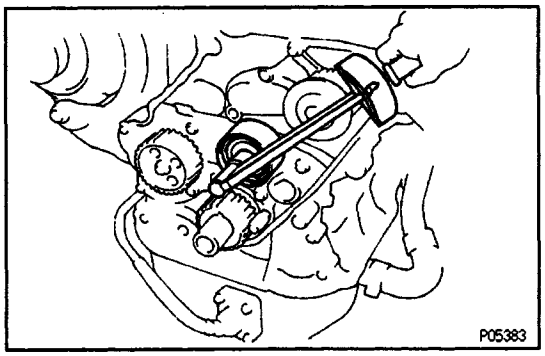

3. INSTALL NO.2 IDLER PULLEY

(a) Install the pulley with the bolt.

Torque: 43 N–m (440 kgf–cm, 32 ft–lbf)

(b) Check that the idler pulley moves smoothly.

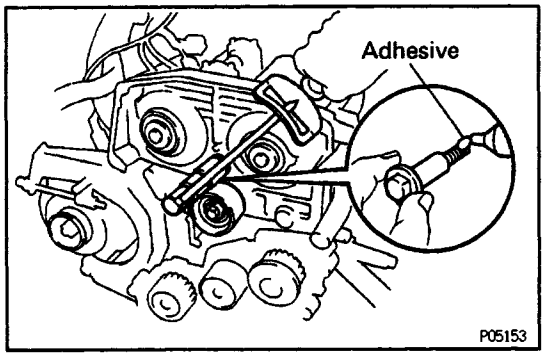

4. INSTALL NO.1 IDLER PULLEY

(a) Apply adhesive two or three threads of the pivot bolt.

Adhesive:

Part No. 08833–00080. THREE BOND 1344, LOCTITE 242 or equivalent

(b) Install the plate washer and pulley with the pivot bolt.

Torque: 52 N–m (530 kgf–cm, 38 ft–lbf)

(c) Check that the idler pulley moves smoothly.

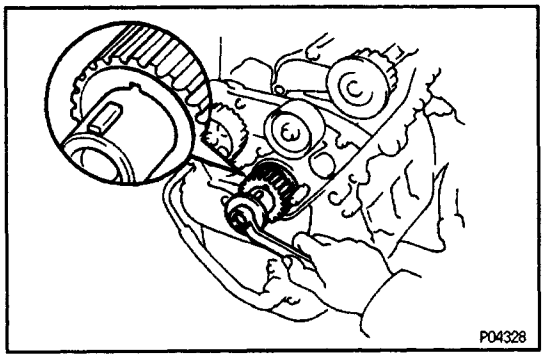

5. TEMPORARILY INSTALL TIMING BELT

NOTICE: The engine should be cold.

(a) Using the crankshaft pulley bolt, turn the crankshaft and position the key groove of the crankshaft timing pulley upward.

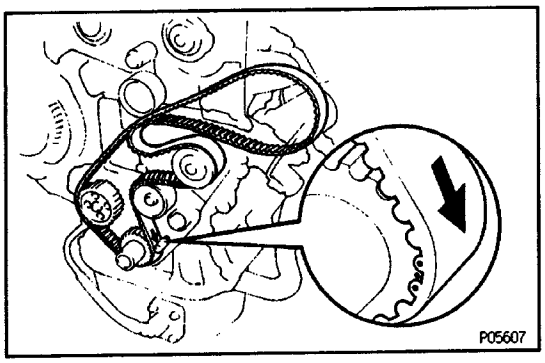

(b) Remove any oil or water on the crankshaft pulley, oil pump pulley, water pump pulley, No.1 idler pulley, No. 2 idler pulley and keep them clean.
(c) Install the timing belt on the crankshaft timing pulley, oil pump pulley, No.1 idler pulley, water pump pulley and No.2 idler pulley.
HINT (When re–using timing belt): Align the points marked during removal, and install the belt with the arrow pointing in the direction of engine revolution.

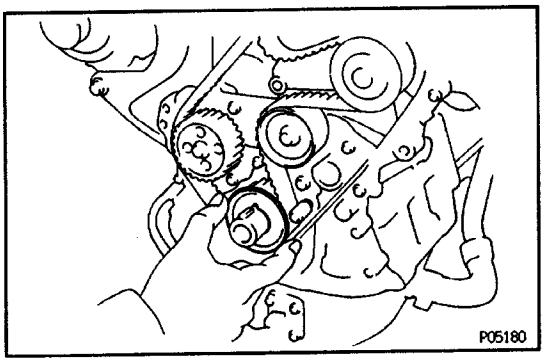

6. INSTALL TIMING BELT GUIDE

Install the guide, facing the cup side outward.

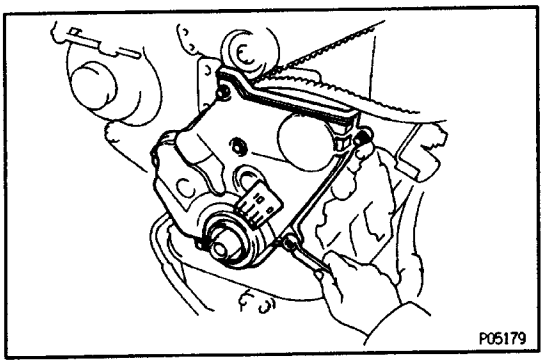

7. INSTALL NO.1 TIMING BELT COVER

(a) Install the gasket to the timing belt cover.
(b) Install the timing belt cover with the six bolts.

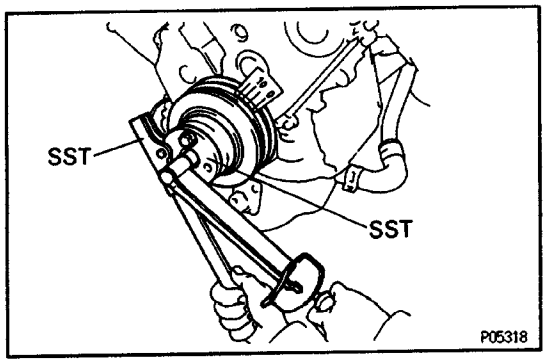

8. INSTALL CRANKSHAFT PULLEY

(a) Align the pulley set key with the key groove of the pulley, and slide on the pulley.
(b) Using SST, install the pulley bolt.
SST 09213–54015 (90119–08216), 09330–00021
Torque: 108 N–m (1,100 kgf–cm, 80 ft–lbf)

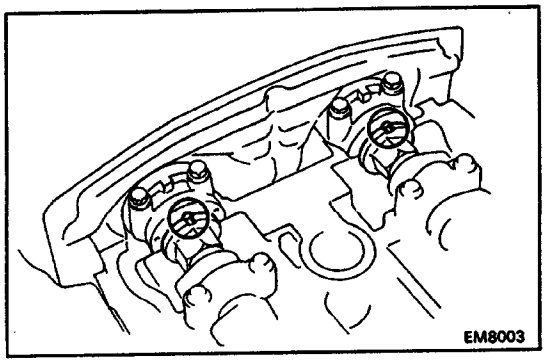

9. INSTALL CAMSHAFT TIMING PULLEY

(a) Using a wrench, turn and align the groove of the camshaft with the dot mark of the No.1 camshaft bearing cap.

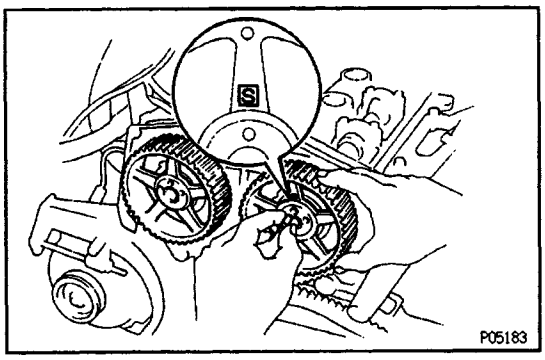

(b) Slide the timing pulley onto the camshaft facing mark "S" upward.
(c) Align the pin holes of the camshaft and timing pulley, and insert the knock pin.

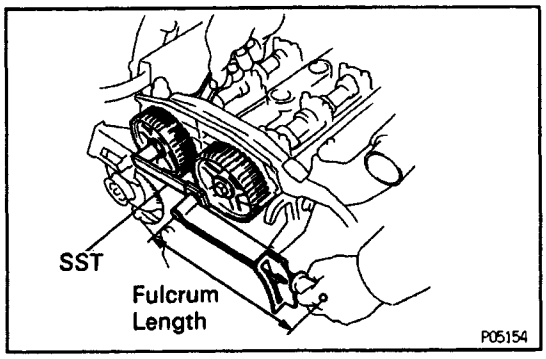

(d) Hold the hexagon wrench portion of the camshaft with a wrench and tighten the bolts.
Torque:
59 N–m (600 kgf–cm. 43 ft–lbf)
41 N–m (420 kgf–cm, 30 ft–lbf) for SST
HINT (Intake camshaft timing pulley):
- Use SST.

SST 09249–63010
- Use a torque wrench with a fulcrum length of 340 mm (13.39 in.).

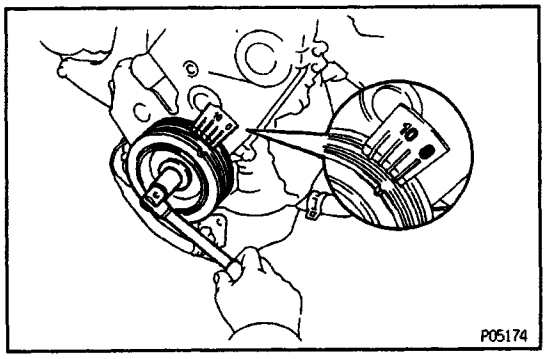

10. SET NO.1 CYLINDER TO TDC/COMPRESSION
(a) Turn the crankshaft pulley, and align its groove with timing mark "0" of the No.1 timing belt cover.

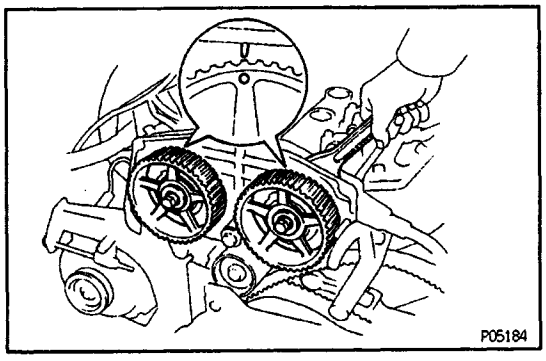

(b) Turn the camshaft, and align the timing marks of the camshaft timing pulleys and No.3 timing belt cover.

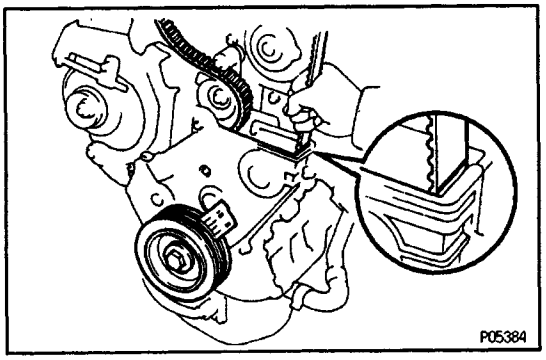

11. CONNECT TIMING BELT TO CAMSHAFT TIMING PULLEYS
HINT (When re–using timing belt):
- Check that the matchmark on the timing belt matches the end of the No.1 timing belt cover.

If the matchmark does not align, shift the meshing o1 the timing belt and crankshaft timing pulley until they align. (See step 28 in Timing Belt Removal)

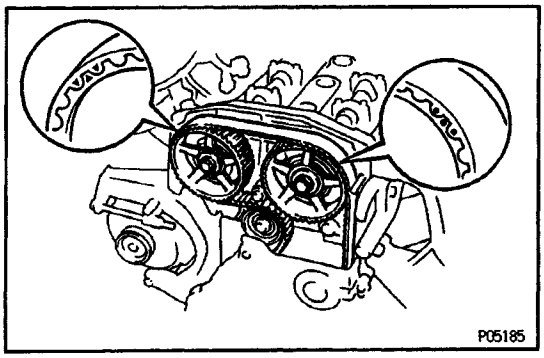

- Align the matchmarks of the timing belt and camshaft timing pulleys.

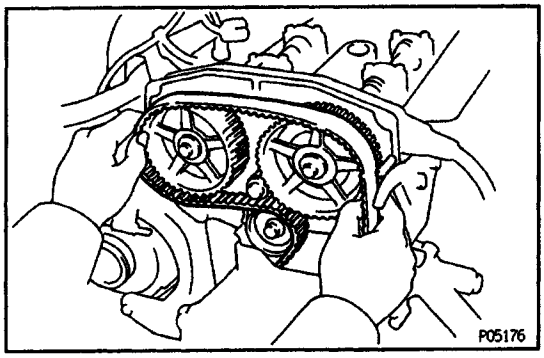

(a) Remove any oil or water on the camshaft timing pul–leys, and keep it clean.
(b) Install the timing belt, and checking the tension be–tween the crankshaft timing pulley and intake cam–shaft timing pulley.

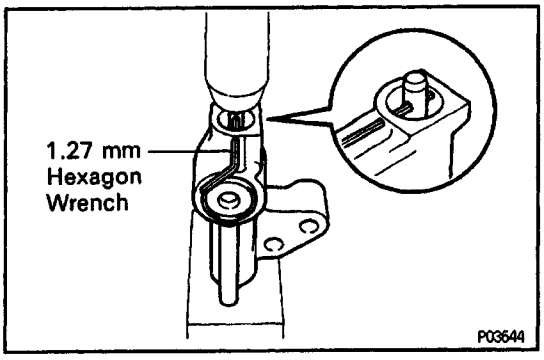

12. SET TIMING BELT TENSIONER

(a) Using a press, slowly press in the push rod using 981 – 9,807 N (100 – 1,000 kgf, 220 – 2,205 lbf) of pressure.
(b) Align the holes of the push rod and housing, pass a 1.27 mm hexagon wrench through the holes to keep the setting position of the push rod.
(c) Release the press.

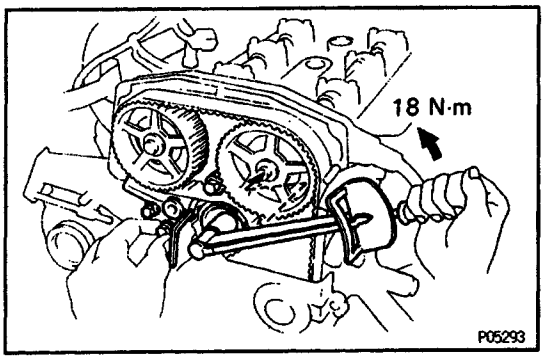

13. INSTALL TIMING BELT TENSIONER

(a) Turn the No.1 idler pulley bolt counterclockwise to obtain the specified torque toward the left as far as the No. 1 idler pulley will go, and temporarily install the tensioner with the two bolts.
Torque: 18 N–m (180 kgf–cm, 13 ft–lbf)
NOTICE: To apply the correct torque, apply the torque wrench along the axis through the bolts of the No.1 idler pulley and exhaust camshaft timing pulley.

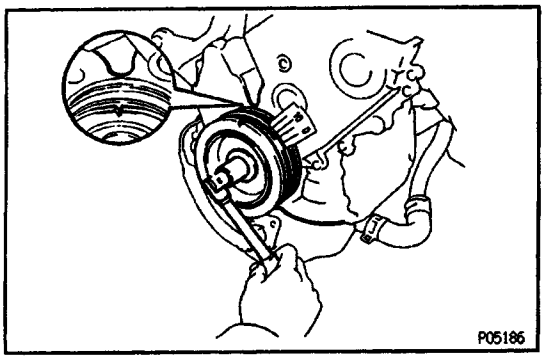

(b) Slowly turn the crankshaft pulley 5/6 revolution, and align its groove with the ATDC 60˚ mark of the No. 1 timing belt cover.
NOTICE: Always turn the crankshaft clockwise.

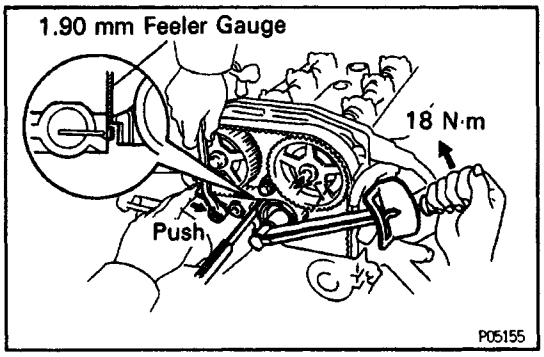

(c) Insert the 1.90 mm (0.075 in.) feeler gauge between the tensioner body and No.1 idler pulley stopper.

(d) Turn the No.1 idler pulley bolt counterclockwise to obtain the specified torque.

Torque: 18 N–m (180 kgf–cm, 13 ft–lbf)

NOTICE: To apply the correct torque, apply the torque wrench along the axis through the bolts of the No.1 idler pulley and exhaust camshaft timing pulley.

(e) While pushing the tensioner, alternately tighten the two bolts.

Torque: 21 N–m (210 kgf–cm, 15 ft–lbf)

(f) Remove the 1.90 mm (0.075 in.) feeler gauge.

(g) Remove the 1.27 mm hexagon wrench from the tensioner

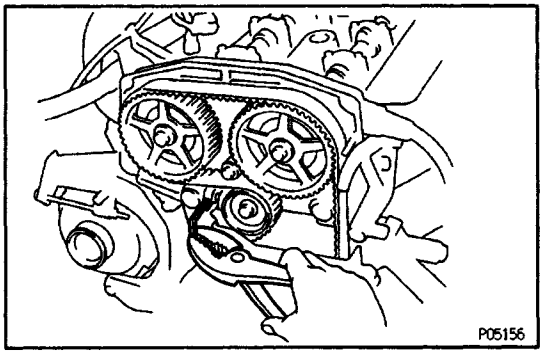

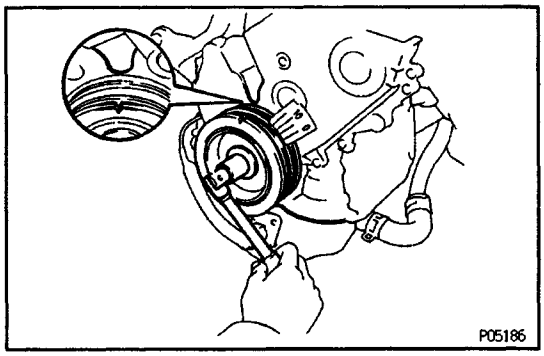

(h) Slowly turn the crankshaft pulley one revolution, and align its groove with the ATDC 60° mark of the No. 1 timing belt cover.

NOTICE: Always turn the crankshaft clockwise.

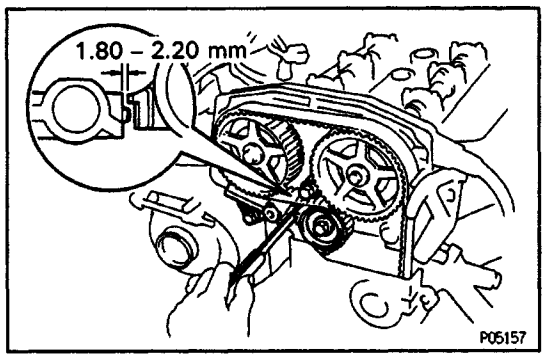

(i) Using a feeler gauge, check the specified clearance between the tensioner body and No.1 idler pulley stopper.

Clearance:

1.80 – 2.20 mm (0.071 – 0.087 in)

If the clearance is not as specified, remove the tensioner and reinstall it.

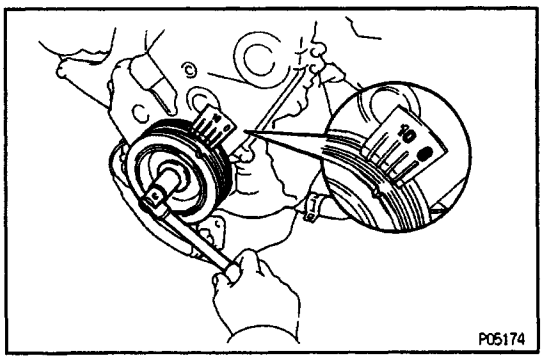

14. CHECK VALVE TIMING

(a) Slowly turn the crankshaft pulley two revolutions from TDC to TDC.

NOTICE: Always turn the crankshaft clockwise.

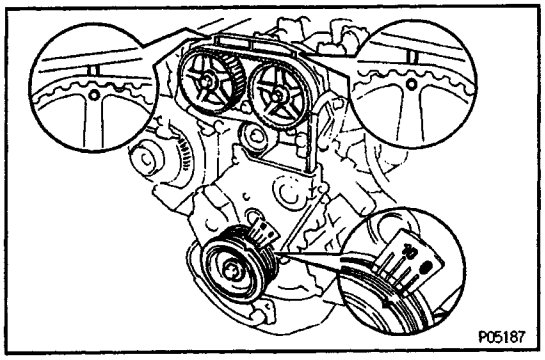

(b) Check that each pulley aligns with the timing marks as shown in the illustration.
If the timing marks do not align, remove the timing belt and reinstall it.

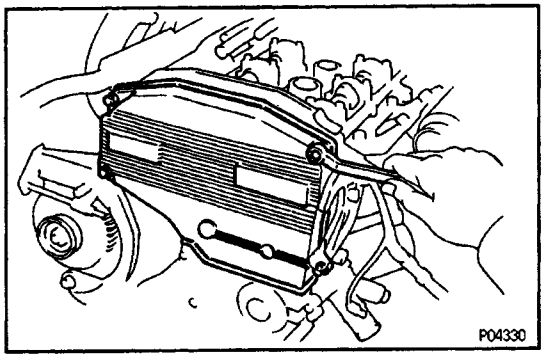

15. INSTALL NO.2 TIMING BELT COVER

(a) Install the gasket to the timing belt cover.
(b) Install the timing belt cover with the five bolts.

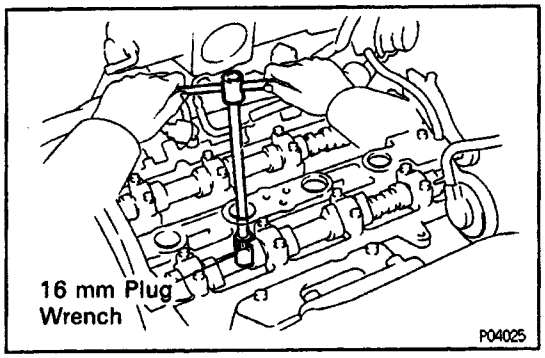

16. INSTALL SPARK PLUGS

Using a 16 mm plug wrench, install the four spark plugs.
Torque: 18 N–m (180 kgf–cm, 13 ft–lbf)

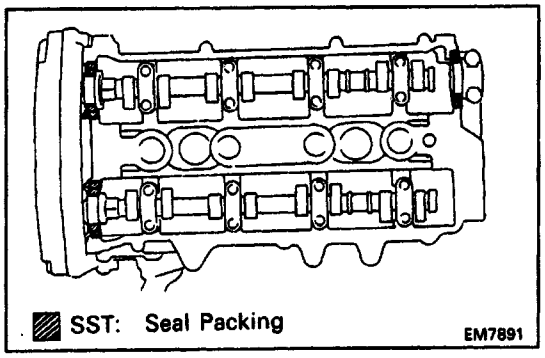

17. REINSTALL CYLINDER HEAD COVER

(a) Remove any old packing (FIPG) material.
(b) Apply seal packing to the cylinder head as shown in the illustration.
Seal packing:
Part No. 08826–00080 or equivalent

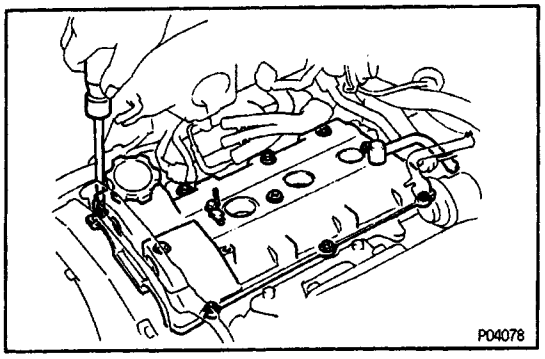

(c) Install the two gaskets to the cylinder head cover.
(d) Install the cylinder head cover with the ten seal washers and screws.
Torque: 2.5 N–m (25 kgf–cm, 21 in.–lbf)

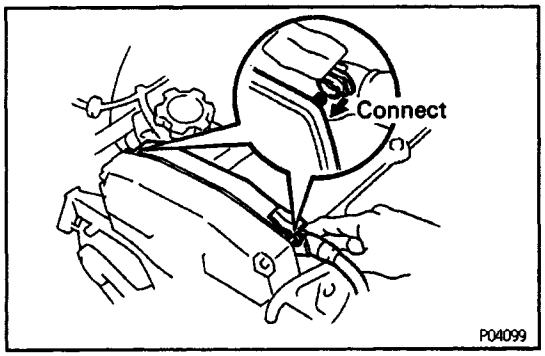

(e) install the two clamps of the engine wire protector to each bolt.

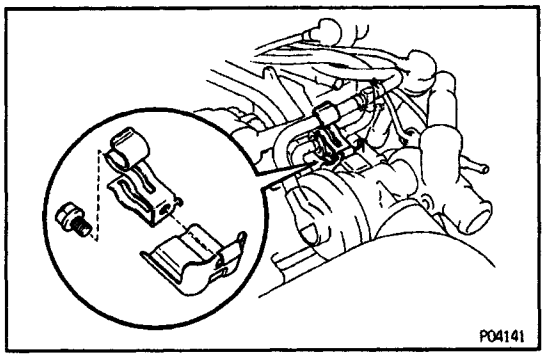

(f) install the two clamps.
(g) Connect the VTV and hose to the clamp.
(h) Connect the high–tension cords.

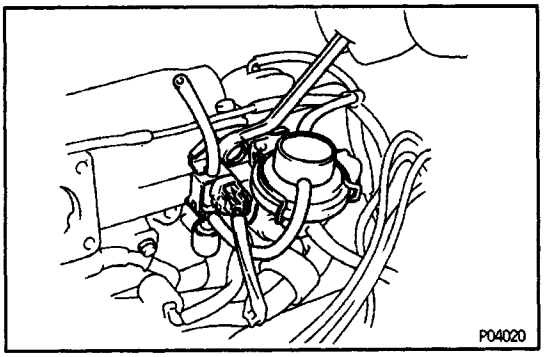

(i) Install the VSV and EGR vacuum modulator assembly with the bolt.

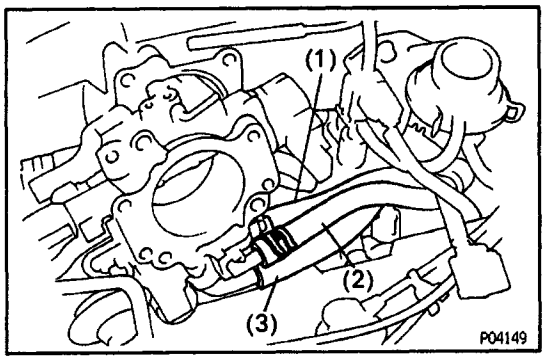

18. INSTALL THROTTLE BODY

(a) Connect the following hoses to the throttle body:
(1) Water by–pass hose (from upper side of No. 1 air tube)
(2) Water by–pass hose (from lower side of No.1 air tube)
(3) Air hose (from No. 1 air tube)

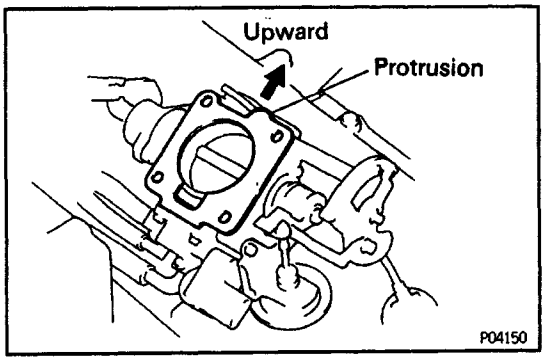

(b) Install a new gasket to the throttle body.

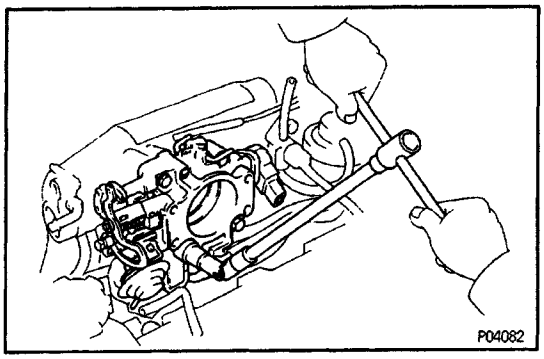

(c) Install the throttle body with the four bolts.

Torque: 19 N–m (195 kgf–cm, 14 ft–lbf)

HINT: Deferment bolt lengths are used for the upper and lower sides.

Bolt length:

45 mm (1.77 in.) for upper side

70 mm (2.76 in.) for lower side

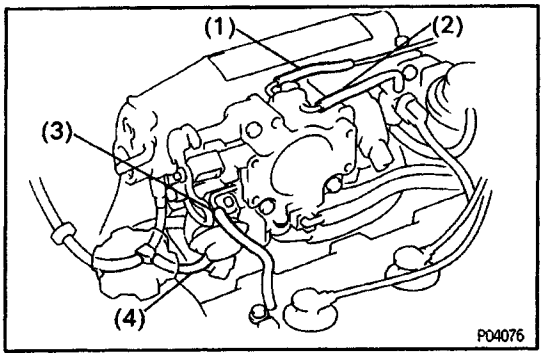

(d) Connect the following hoses:

(1) Vacuum hose to port ”P” of throttle body

(2) Vacuum hose to port ”E” of throttle body

(3) PCV hose to port PCV of throttle body

(4) Vacuum hose to throttle body opener

(e) Connect the following connector:

- Throttle position sensor connector
- IACV connector

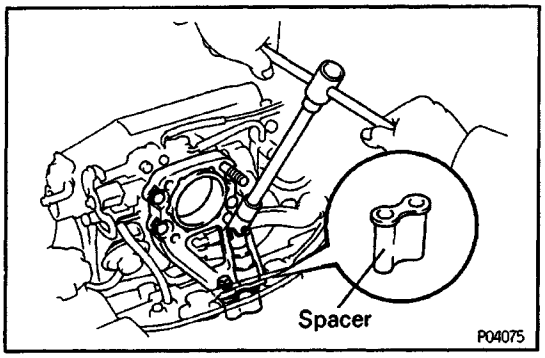

19. INSTALL INTAKE AIR CONNECTOR STAY

(a) Install the spacer.

(b) Install the intake air connector stay with the six bolts.

Torque:

7.8 N–m (80 kgf–cm. 69 in–lbf) for 10 mm head

19 N–m (195 kgf–cm, 14 ft–lbf) for 12 mm head

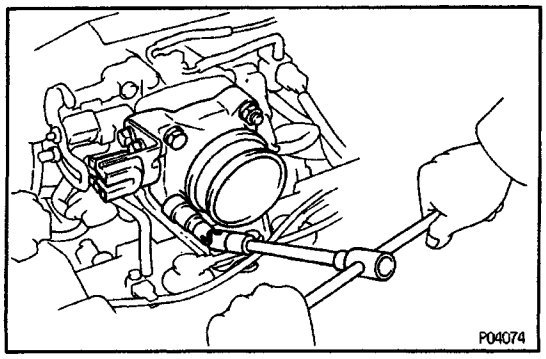

20. INSTALL INTAKE AIR CONNECTOR

Install the intake air connector with the two bolts and two nuts.

Torque: 19 N–m (195 kgf–cm, 14 ft–lbf)

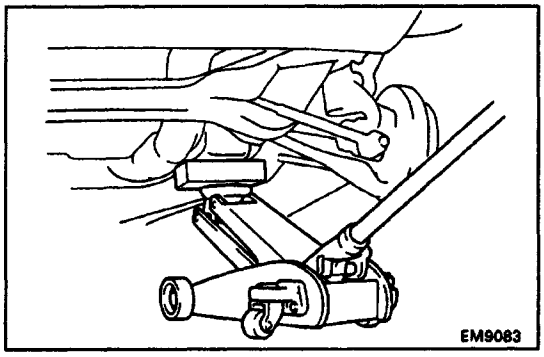

21. INSTALL RH ENGINE MOUNTING BRACKET

(a) Place the mounting bracket in position.

HINT: Raise the engine as far as it will go, and place the mounting bracket in position.

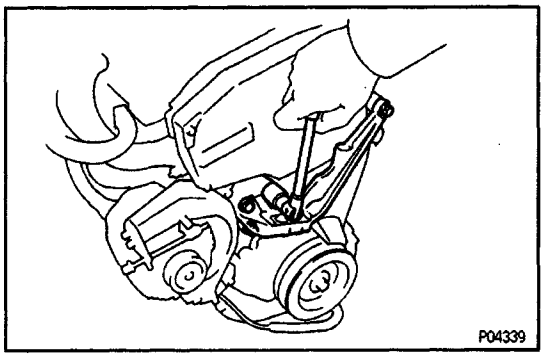

(b) Install the mounting bracket with the four bolts.

Torque: 61 N–m (620 kgf–cm, 45 ft–lbf)

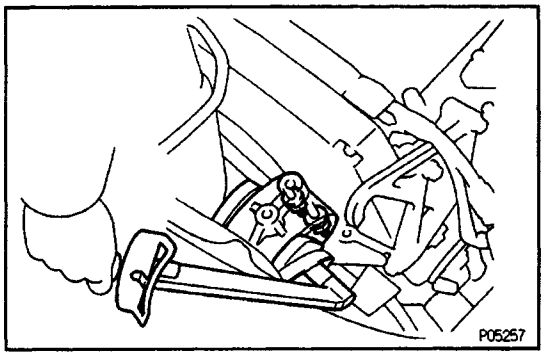

22. INSTALL RH ENGINE MOUNTING INSULATOR

Install the mounting insulator with the throught bolt and two nuts.

Torque:

52 N–m (530 kgf–cm, 38 ft–lbf) for nut

78 N–m (800 kgf–cm, 58 ft–lbf) for through bolt

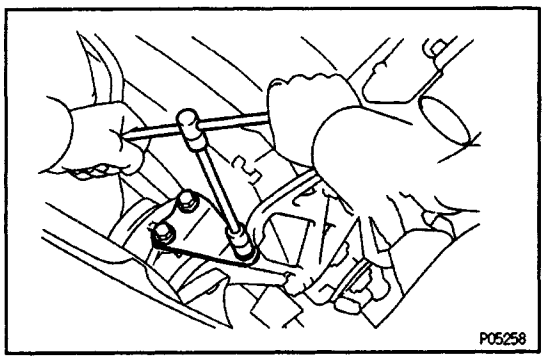

23. INSTALL RH ENGINE MOUNTING STAY

Install the mounting stay with the three bolts.

Torque: 73 N–m (740 kgf–cm, 54 ft–lbf)

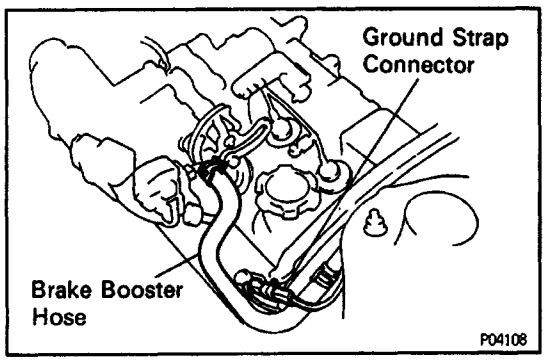

24. CONNECT BRAKE BOOTER VACUUM HOSE

25. CONNECT GROUND STRAP CONNECTOR

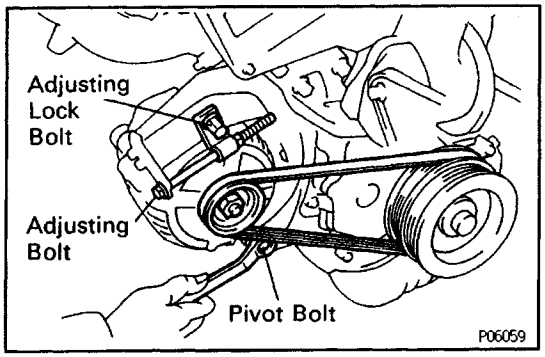

26. INSTALL ALTERNATOR DRIVE BELT

(a) Install the drive belt with the adjusting bolt.

(b) Adjust the drive belt with the adjusting bolt.

(c) Tighten the adjusting lock bolt and pivot bolt.

27. INSTALL RH REAR WHEEL

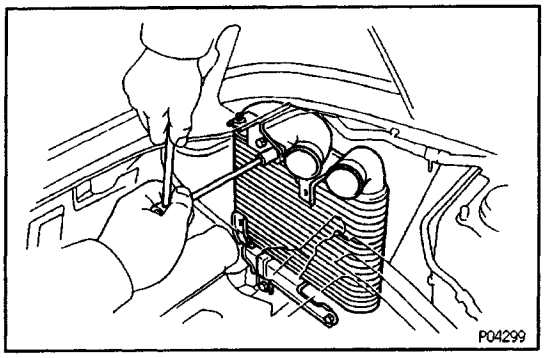

28. INSTALL CAC

Install the CAC and upper bracket with the five bolts.

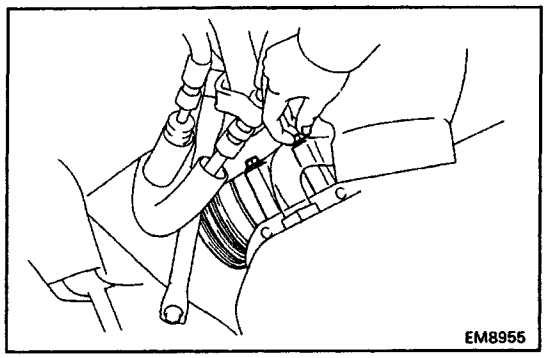

29. INSTALL A/C COMPRESSOR

(a) Temporarily install the A/C compressor with the two bolts.

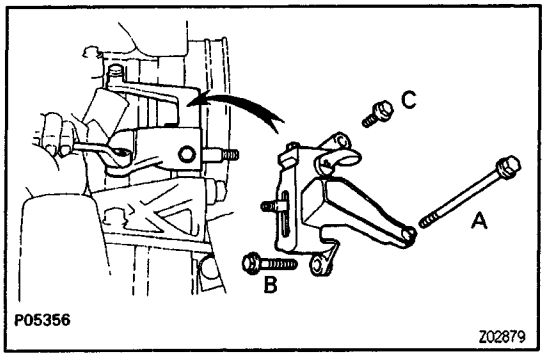

(b) Install the idler pulley bracket with the three bolts.

Torque:

25 N–m (250 kgf–cm, 18 ft–lbf) for A

27 N–m (275 kgf–cm, 20 ft–lbf) for B

37 N–m (375 kgf–cm, 27 ft–lbf) for C

(c) Connect the A/C compressor connector.

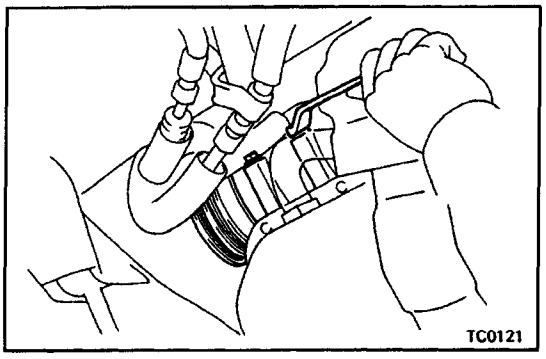

(d) Tighten the two bolts of the lower side of the A/C compressor.

Torque: 25 N–m (250 kgf–cm, 18 ft–lbf)

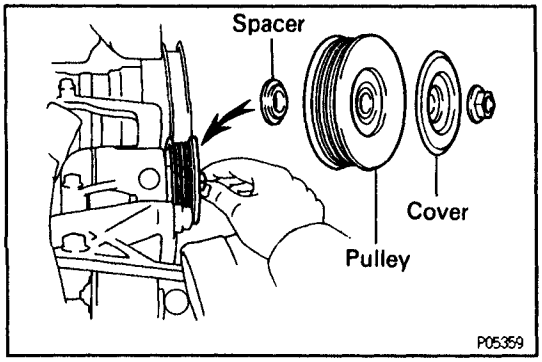

(e) Temporarily install the spacer, idler pulley and pulley cover with the nut.

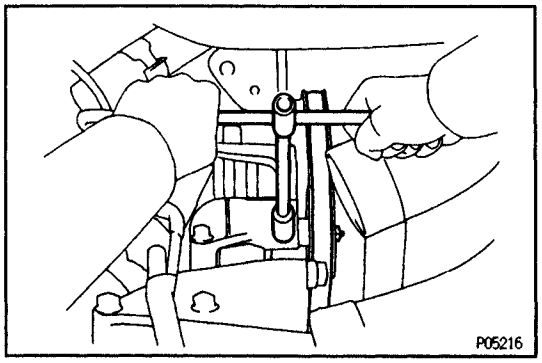

(f) Install the drive belt with the adjusting bolt.
(g) Tighten the idler pulley nut.

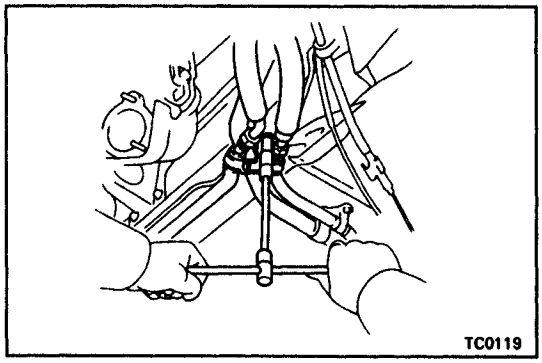

(h) Install the A/C pipes with the two clamps and nut.

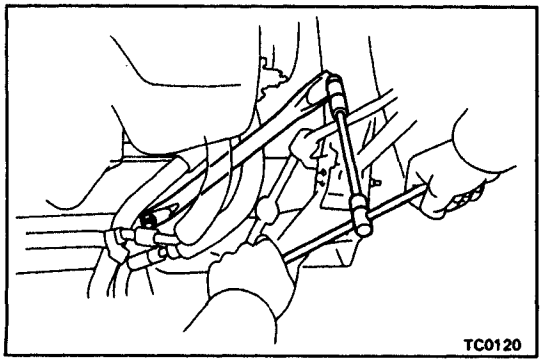

(i) Install the lower suspension brace with the two bolts.
Torque: 73 N–m (740 kgf–cm, 54 ft–lbf)

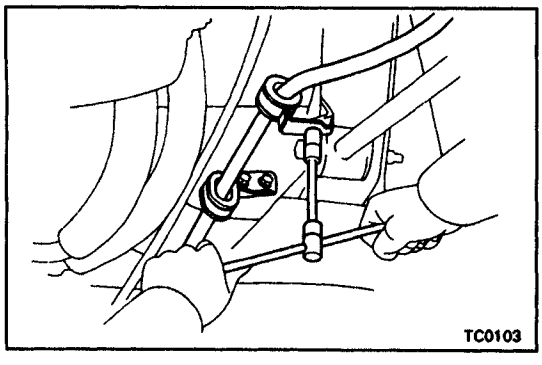

(j) Install the parking brake cable with the two clamp and three bolts.

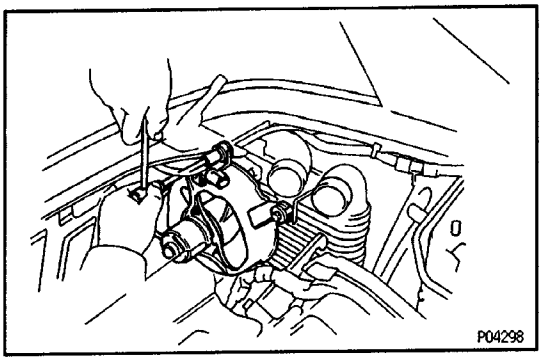

30. INSTALL ENGINE COMPARTMENT ELECTRIC COOLING FAN

(a) Install the cooling fan with the three bolts.
(b) Connect the cooling fan connector.

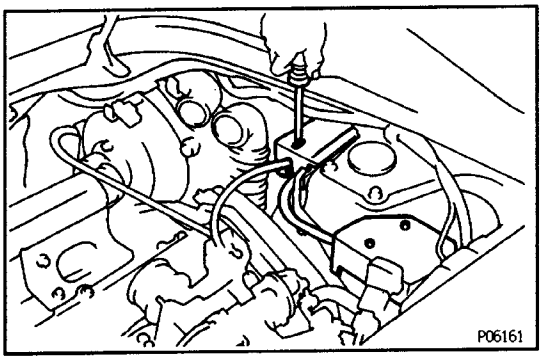

31. (w/ CRUISE CONTROL SYSTEM) INSTALL CRUISE CONTROL ACTUATOR AND ACCELERATOR LINKAGE

32. (w/o CRUISE CONTROL SYSTEM) CONNECT ACCELERATOR LINKAGE TO THROTTLE BODY

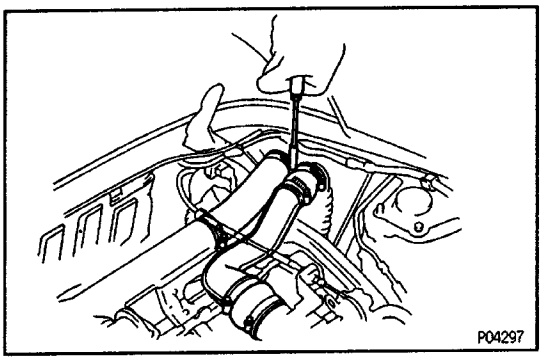

33. INSTALL NO.1 AND NO.2 INTAKE AIR CONNECTORS

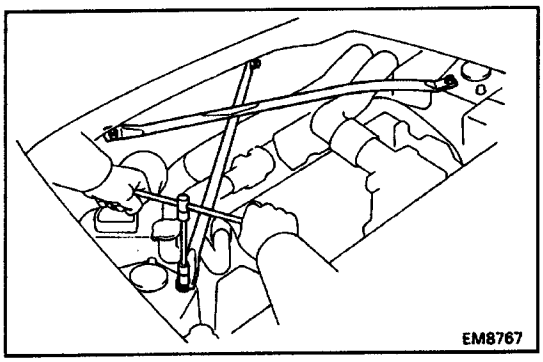

34. INSTALL UPPER SUSPENSION BRACE

Install the upper– brace with the two bolts and two nuts.

Torque:

73 N–m (740 kgf–cm, 54 ft–lbf) for–bolt
64 N–m (650 kgf–cm, 47 ft–lbf) for nut

35. INSTALL RH ENGINE HOOD SIDE PANEL

36. INSTALL ENGINE UNDER COVERS

37. CONNECT CABLE TO NEGATIVE TERMINAL OF BATTERY

EGOWB–01

VALVE TIMING ADJUSTMENT

(See Components for Removal and Installation)

1. REMOVE RH ENGINE MOUNTING BRACKET

(See steps 1 to 11 and 13 to 18 in Timing Belt Removal)

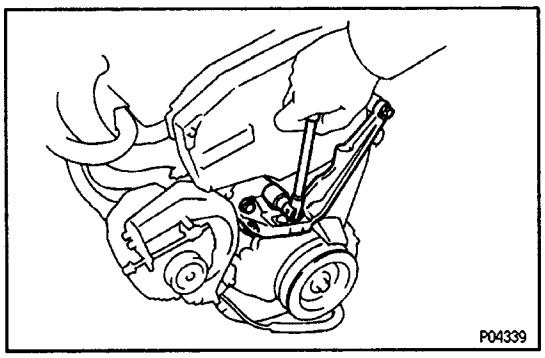

2. REMOVE No.2 TIMING BELT COVER

Remove the five bolts, timing belt cover and gasket.

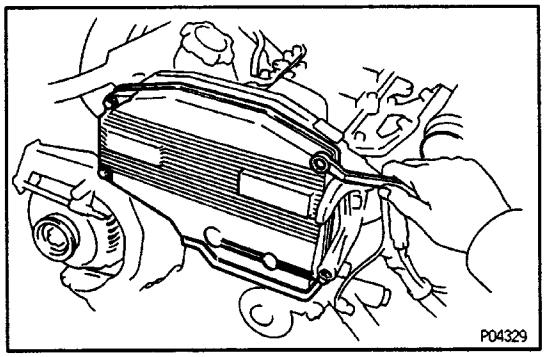

3. REMOVE SPARK PLUGS

(a) Disconnect the high – tension cords at the rubber boot. Do not pull on the high–tension cords.

NOTICE: Pulling on or bending the cords may damage the conductor inside.

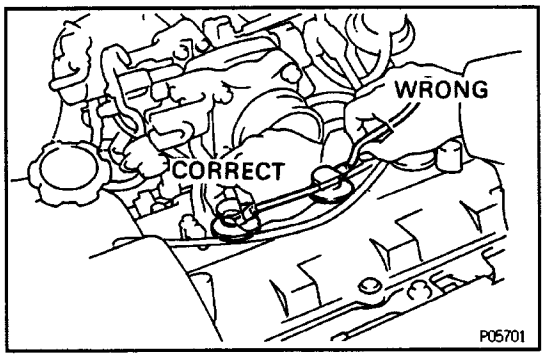

(b) Using a 16 mm plug wrench, remove the four spark plugs.

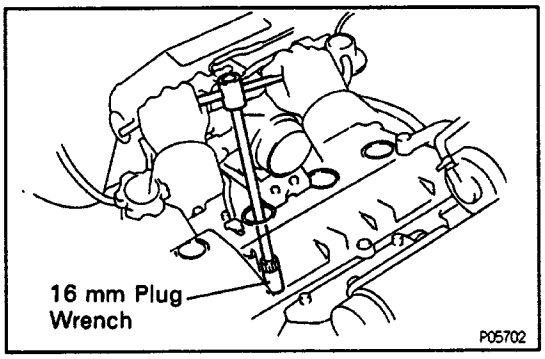

4. CHECK CAMSHAFT TIMING PULLEY MARKS

(a) Turn the crankshaft pulley and align its groove with timing mark ”0” of the No.1 timing belt cover.

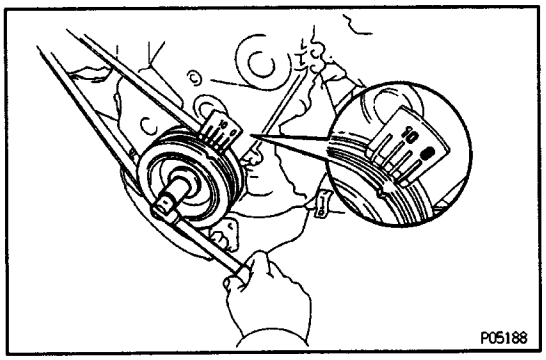

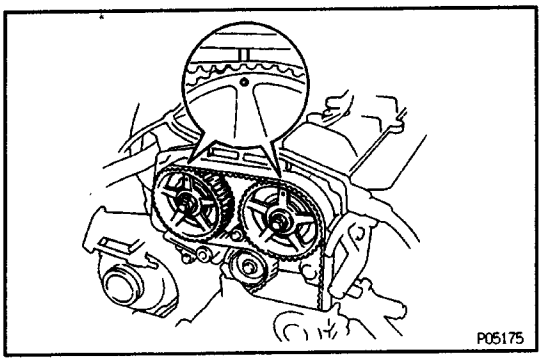

(b) Check that the timing marks of the camshaft timing pulleys are aligned with the timing marks of the No.3 timing belt cover.

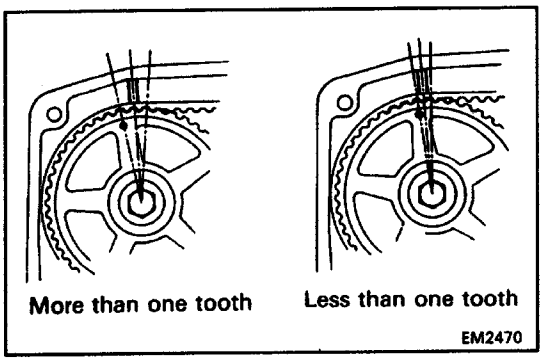

- If there is more one timing pulley tooth between the timing marks, realign the timing marks in accordance with step 9.
- If the timing marks are aligned or the difference is less than one timing pulley tooth, proceed to step 10.

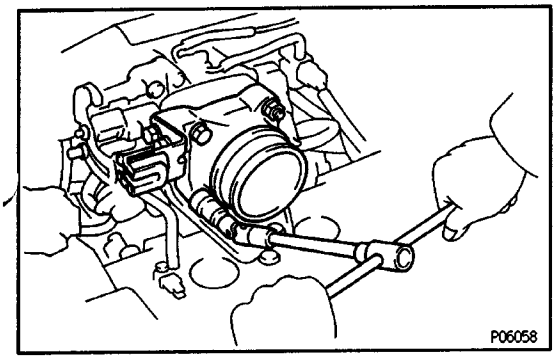

5. REMOVE INTAKE AIR CONNECTOR

Remove the two bolts, two nuts and intake air con–nector.

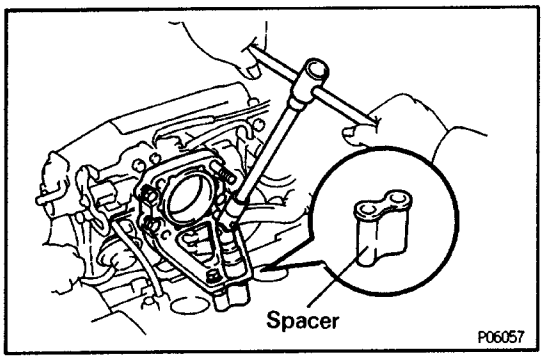

6. REMOVE INTAKE AIR CONNECTOR STAY

(a) Remove the six bolts and intake air connector stay.
(b) Remove the spacer.

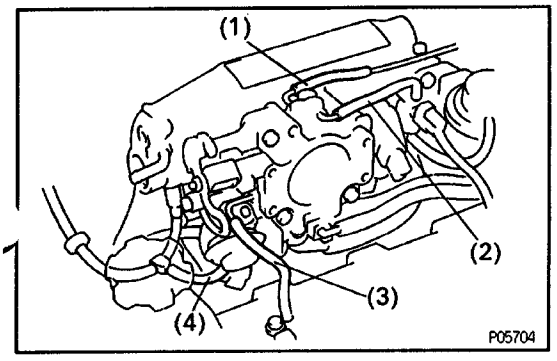

7. REMOVE THROTTLE BODY

(a) Disconnect the following connector:
Throttle position sensor connector
IACV connector
(b) Disconnect the following hoses:
(1) Vacuum hose from port ”P” of throttle body
(2) Vacuum hose from port ”E” of throttle body
(3) PCV hose from port PCV of throttle body
(4) Vacuum hose from throttle body opener

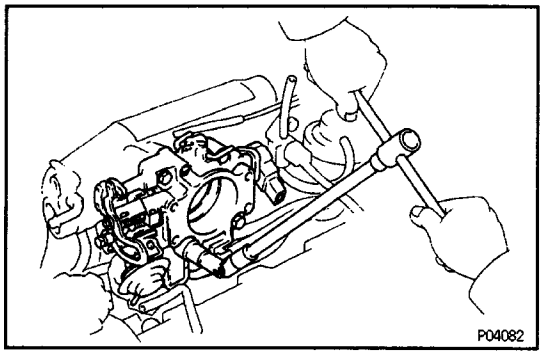

(c) Remove the four bolts, and disconnect the throttle body from the intake manifold.
(d) Remove the throttle body gasket.

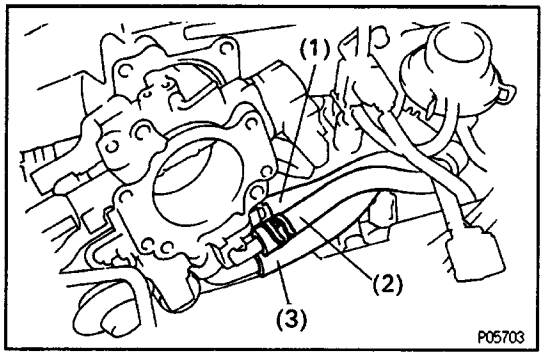

(e) Disconnect the following hoses from the throttle body, and remove the throttle body:
(1) Water by–pass hose (from upper side of No. 1 air tube)
(2) Water by–pass hose (from lower side of No.1 air tube)
(3) Air hose (from No. 1 air tube)

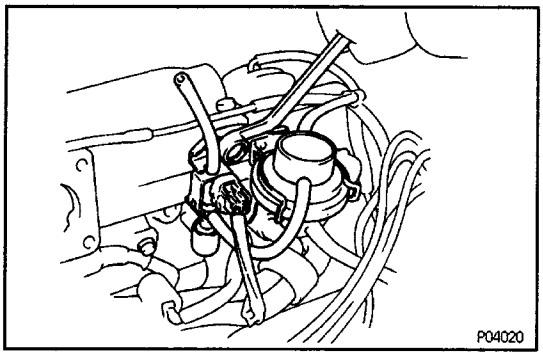

8. REMOVE CYLINDER HEAD COVER

(a) Remove the bolt, and disconnect the VSV and EGR vacuum modulator assembly from the intake mani–fold.

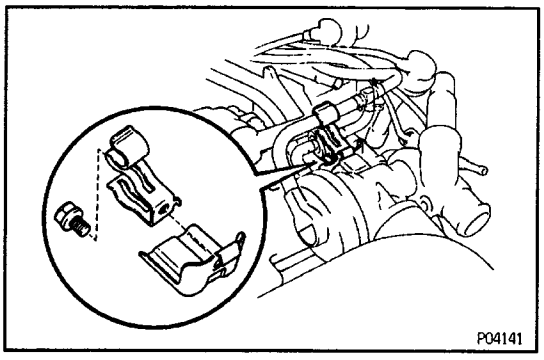

(b) Disconnect the hose and VTV from the clamps.
(c) Remove the bolt and two clamps.

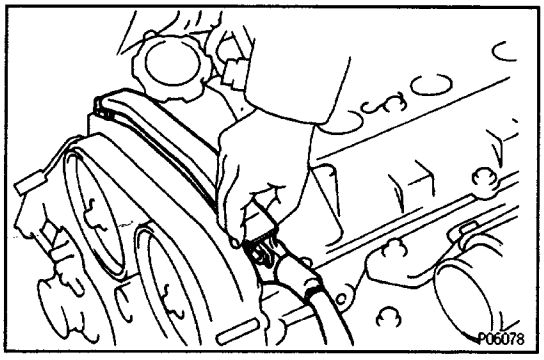

(d) Disconnect the engine wire protector between the No. 3 timing belt cover and cylinder head cover.

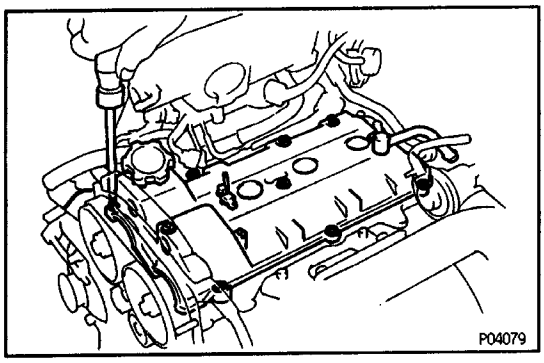

(e) Remove the ten screws, seal washers bolts, head cover and two gaskets.

9. ADJUST CAMSHAFT TIMING PULLEY MARKS

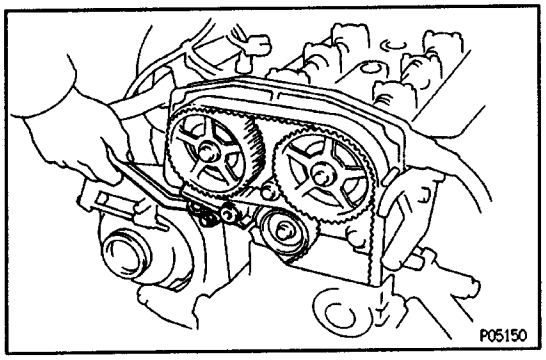

(a) Remove the two bolts and timing belt tensioner.

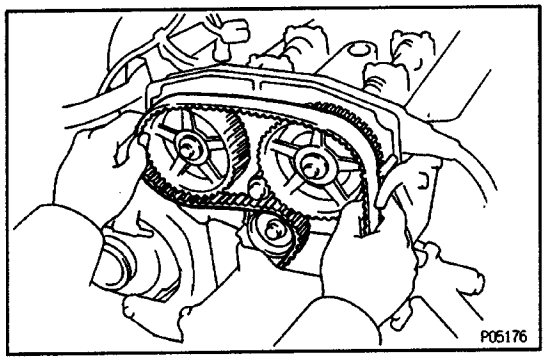

(b) Disconnect the timing belt from the camshaft timing pulleys.

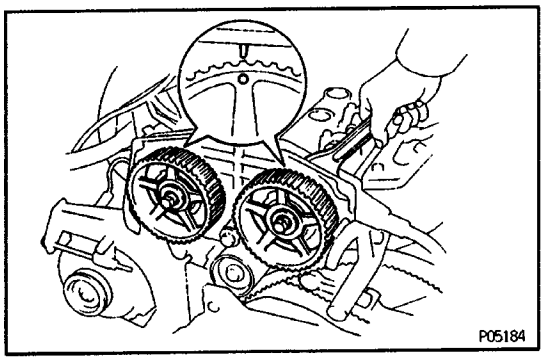

(c) Rotate the camshaft with a wrench, and align the alignment marks of the camshaft timing pulley and No.3 timing belt cover.

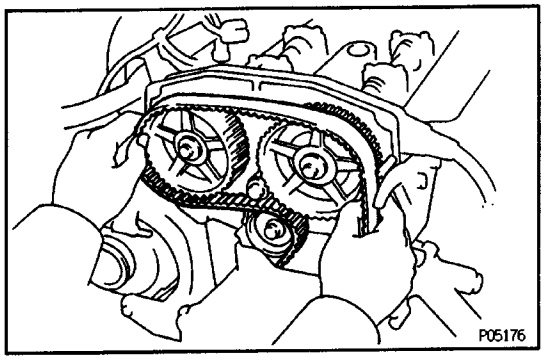

(d) Reinstall the timing belt, checking the tension be–tween the the crankshaft timing pulley and intake camshaft timing pulley.

NOTICE: Install the timing belt when the engine is cold.

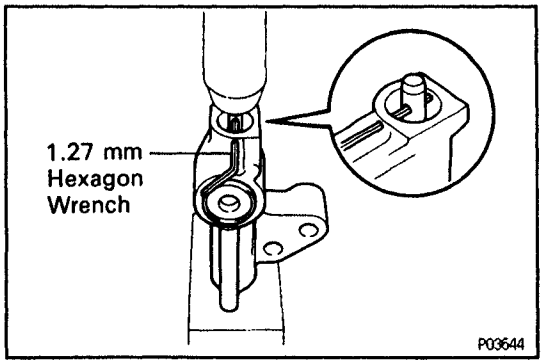

(e) Set the timing belt tensioner.
- Using a press, slowly press in the push rod using 981 – 9,807 N (100 – 1,000 kgf, 220 – 2,205 lbf) of pressure.
- Align the holes of the push rod and housing, pass a 1.27 mm hexagon wrench through the holes to keep the setting position of the push rod.
- Release the press.

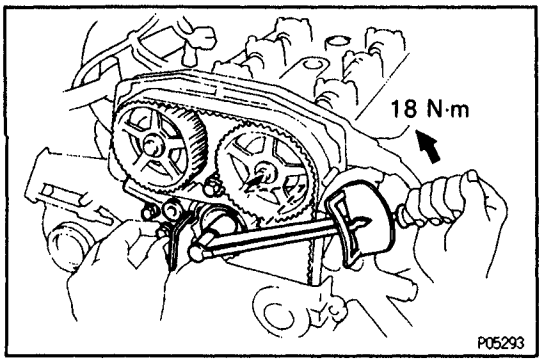

(f) Turn the No.1 idler pulley bolt counterclockwise to obtain the specified torque toward the left as far as the No. 1 idler pulley will go, and temporarily install the tensioner with the two bolts.
Torque: 18 N–m (180 kgf–cm, 13 ft–lbf)
NOTICE: To apply the correct torque, apply the torque wrench along the axis through the bolts of the No.1 idler pulley and exhaust camshaft timing pulley.

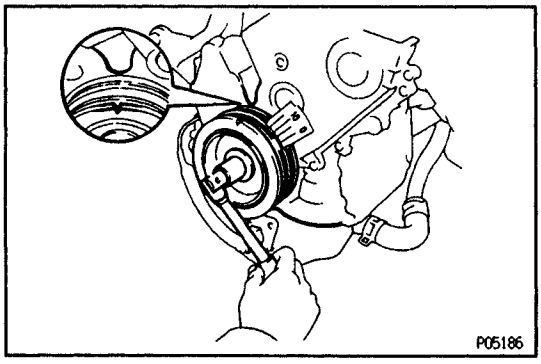

(g) Slowly turn the crankshaft pulley 5/6 revolution, and align its groove with the ATDC 60° mark of the No. 1 timing belt cover.
NOTICE: Always turn the crankshaft clockwise.

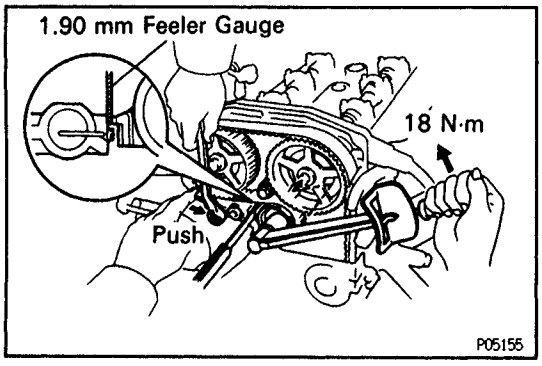

(h) Insert the 1.90 mm (0.075 in.) feeler gauge between the tensioner body and No.1 idler pulley stopper.
(i) Turn the No.1 idler pulley bolt counterclockwise to obtain the specified torque.
Torque: 18 N–m (180 kgf–cm, 13 ft–lbf)
NOTICE: To apply the correct torque, apply the torque wrench along the axis through the bolts of the No.1 idler pulley and exhaust camshaft timing pulley.
(j) While pushing the tensioner, alternately tighten the two bolts.
Torque: 21 N–m (210 kgf–cm, 15 ft–lbf)
(k) Remove the 1.90 mm (0.075 in.) feeler gauge.
(1) Remove the 1.27 mm hexagon wrench from the tensioner.

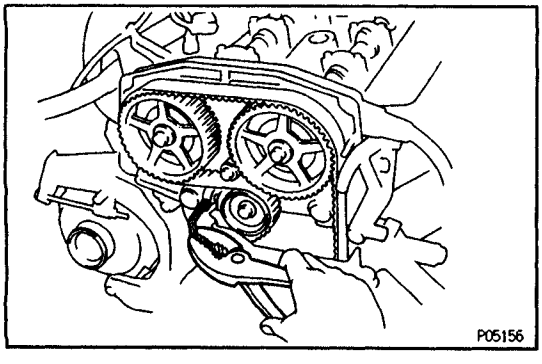

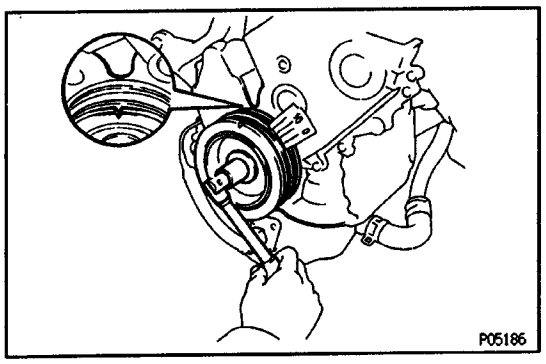

(m) Slowly turn the crankshaft pulley one revolution, and align its groove with the ATDC ^0˚ mark of the No. 1 timing belt cover.
NOTICE: Always turn the crankshaft clockwise.

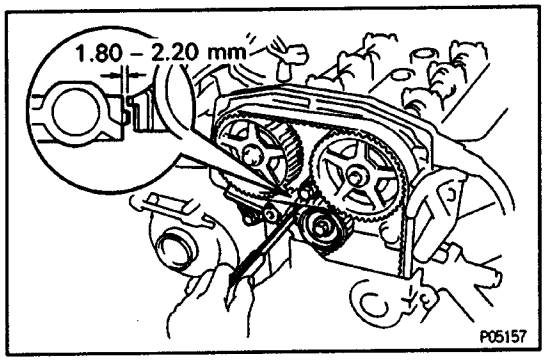

(n) Using a feeler gauge, check the specified clearance between the tensioner body and No.1 idler pulley stopper.
Clearance:
1.80 – 2.20 mm (0.071 – 0.087 in)
If the clearance is not as specified, remove the tensioner and reinstall it.

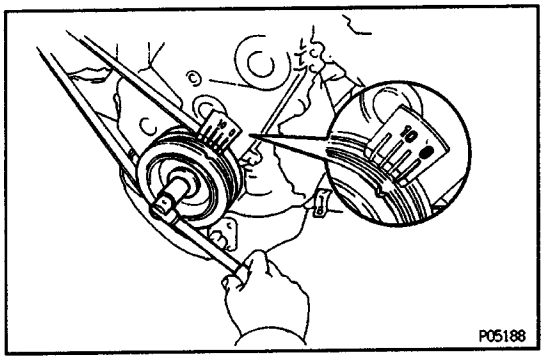

(o) Slowly turn the crankshaft pulley two revolutions from TDC to TDC.
NOTICE: Always turn the crankshaft clockwise.

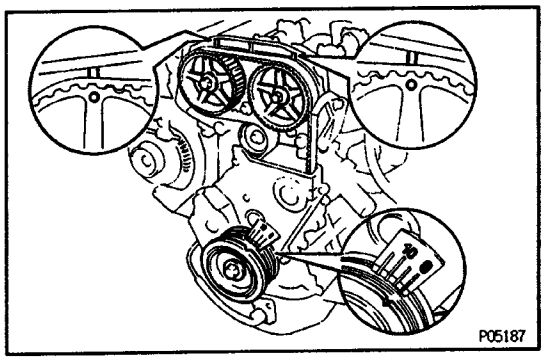

(p) Check that each pulley aligns with the timing marks as shown in the illustration.

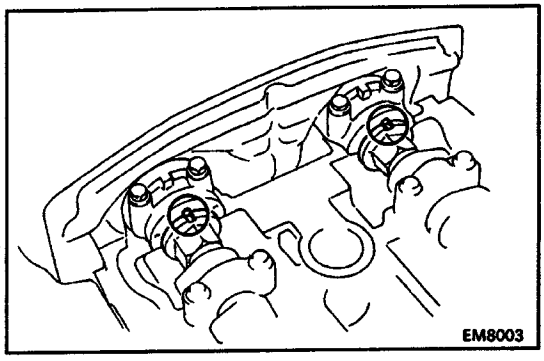

10. CHECK VALVE TIMING
(a) Using a wrench, turn and align the groove of the camshaft with the dot mark of the No.1 camshaft bearing cap.

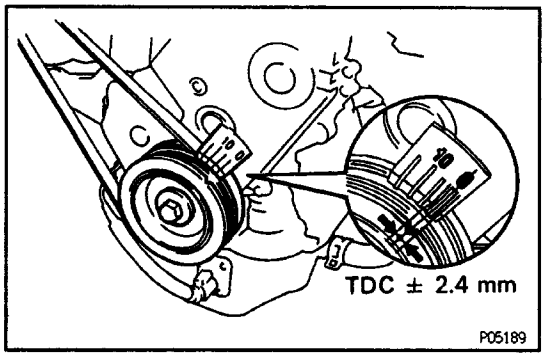

(b) Next mark a note of the crankshaft pulley angle on the No.1 timing belt cover.
HINT: Perform this check separately for the intake and exhaust sides.
If the crankshaft pulley movement is within ± 2.4 mm (0.094 in.) of TDC, it is correct.
If it is greater than 2.4 mm (0.094 in.), go back to step 9.

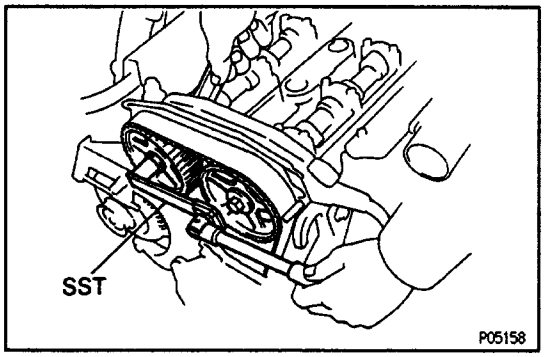

11. ADJUST VALVE TIMING

(a) Hold the hexagon wrench head portion of the camshaft with a wrench, and remove the two camshaft timing pulley bolts.
HINT (Intake camshaft timing pulley): Use SST.
SST 09249 – 63010
NOTICE: Do not make use of the timing belt tension when loosening the pulley bolts.

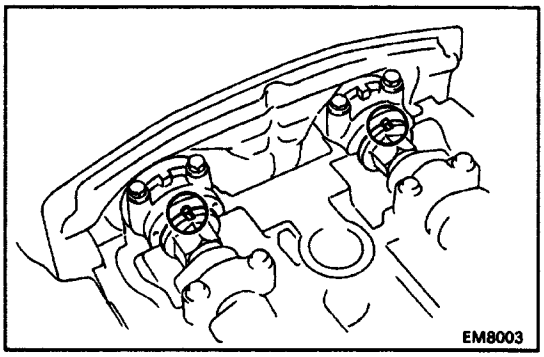

(b) Using a wrench, turn and align the groove of the camshaft with the dot mark of the No.1 camshaft bearing cap.

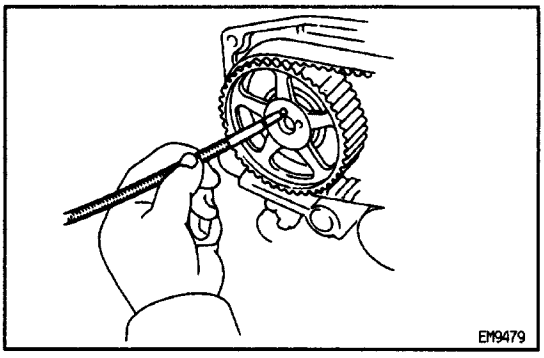

(c) Using a magnetic finger, remove the knock pin from the pin hole of the camshaft timing pulley.

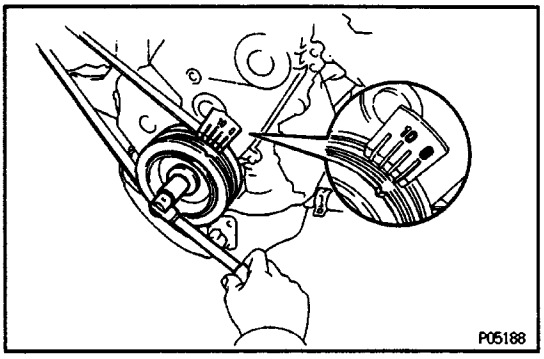

(d) Slowly turn the crankshaft pulley two revolutions from TDC to TDC.
NOTICE: Always turn the crankshaft clockwise.

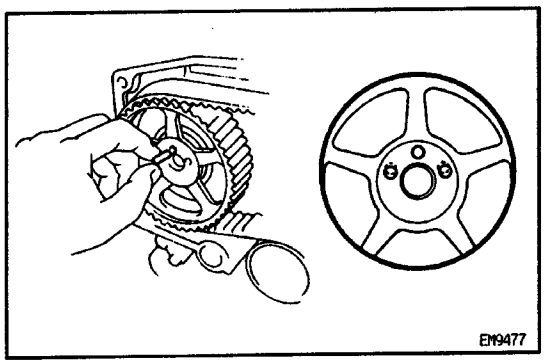

(e) Select one overlapped hole of the camshaft and timing pulley, and insert the knock pin into it.
HINT:

- If there is not an overlapped hole, rotate the crankshaft a little and insert the pin knock pin into the nearly overlapped hole.
- By changing the pin hole to the next one, the crankshaft pulley angle can be adjusted by approx. 2˚.
- By changing the pin hole to the next two, the crankshaft pulley angle can be adjusted by approx. 5˚.

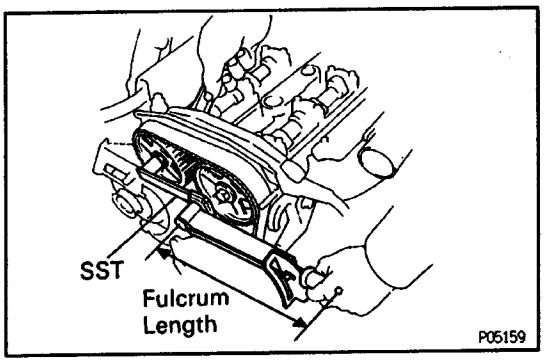

(f) Hold the hexagon wrench portion of the camshaft with a wrench, and tighten the two camshaft timing pulley bolts.
Torque:
59 N–m (600 kgf–cm. 43 ft–lbf)
41 N–m (420 kgf–cm, 30 ft–lbf) for SST
HINT(Intake camshaft timing pulley):

- Use SST.

SST 09249–63010

- Use a torque wrench with a fulcrum length of 340 mm (13.39 in.).

NOTICE: Do not make use of the timing belt tension when tightening the pulley bolts.

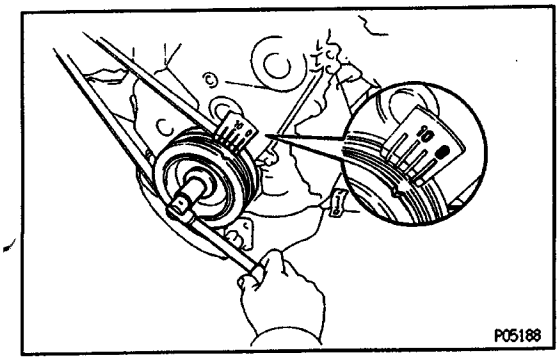

(g) Slowly turn the crankshaft pulley two revolutions from TDC to TDC.
NOTICE: Always turn the crankshaft clockwise.
(h) Recheck the valve timing. (See step 10 above)

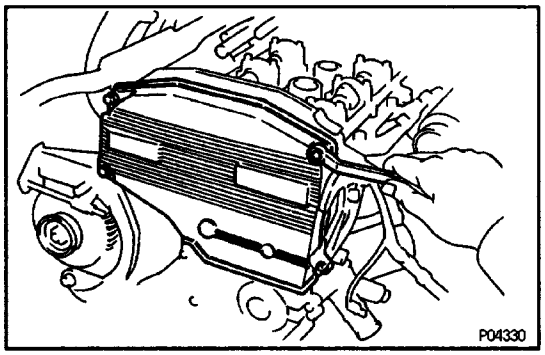

12. INSTALL NO.2 TIMING BELT COVER

(a) Install the gasket to the timing belt cover.

(b) Install the timing belt cover with the five bolts.

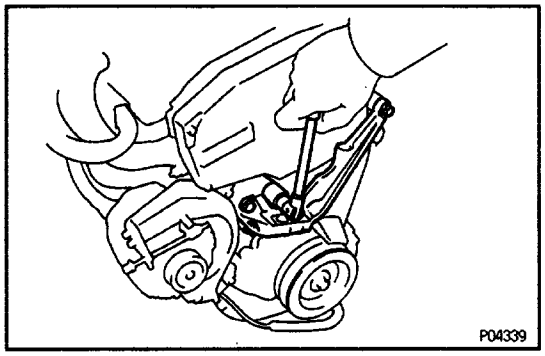

13. INSTALL RH ENGINE MOUNTING BRACKET

(See steps 16 to 25 and 27 to 37 in Timing Belt Installation)

TOYOTA–VARIABLE INDUCTION SYSTEM (T–VIS)

EGGW4–01

T–VIS INSPECTION

1. WARM UP AND STOP ENGINE

Allow the engine to warm up to normal operating temperature.

2. CONNECT TACHOMETER

(See step 2 in Ignition Timing Inspection and Adjustment)

3. CONNECT VACUUM GAUGE

Using a 3 – way connector, connect the vacuum gauge to the hose between the VSV and actuator.

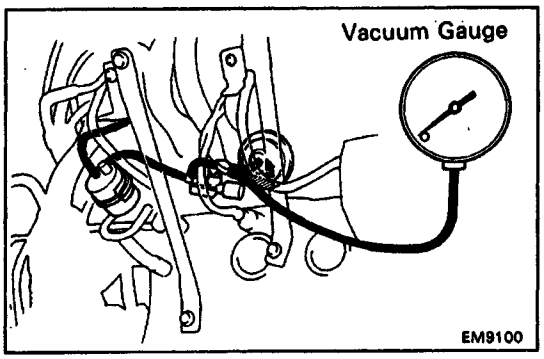

4. CONNECT VACUUM GAUGE

(a) Check that the vacuum gauge indicates vacuum at idling.

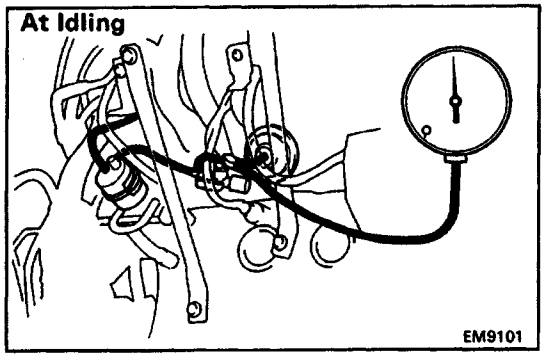

(b) Check that the vacuum gauge indicates zero at 4,200 rpm or more.

HINT: If regular unleaded gasoline is used, the vacuum gauge also indicates zero below 4,200 rpm.

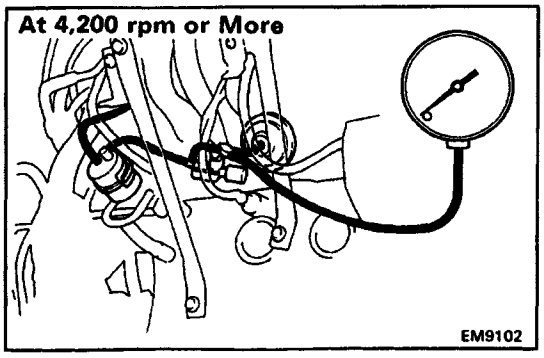

5. DISCONNECT TACHOMETER

TROUBLESHOOTING

You will find the source of the trouble more easily by correctly using the table shown below. In this table, each number shows the order of priority of the causes of the trouble. Check each part in the order shown. If nesessary, replace the part.

	See page	IG–4	IG–4	EG1–310 EG1–403	EG1–303	EG1–302	EG1–300	EG1–298	EG1–304	–	–	EG1–312 EG1–382	EG1–335	EG1–355	EG1–340	EG1–329	EG1–369	EG1–374
	Suspect area	RPM Signal Circuit	Ignition Circuit	Oxygen Sensor Circuit	ECTS Circuit	Intake Air Temp. Sensor Circuit	Air Flow Sensor Circuit	Throttle Position Sensor Circuit	STA Signal Circuit	Knock Sensor Circuit	A/C Signal Circuit	Fuel Pump and Relay	Fuel Pressure Regulator	Fuel Lines	Injectors	Cold Start Injector System	IACV	MPI Main Relay
Dose not Start	Engine does not crank																	
	Starter runs – engine does not crank																	
	No initial combusion	13	3				6					7				14	9	4
	No complete combusion				5		2						4		10	11	3	
Difficult to start	Engine cranks slowly										2							
	Difficult to start normally	13	14		5	15						8	7	9	18	19	4	
	Difficult to start in clod				1	7			2			9	8	10	11	6	5	
	Difficult to start in hot				1	5						8	7	9	10	6	4	
Poor idling	Incorrect first idle				2												3	
	High engine idle speed				2	4		5			6				7	8	3	
	Low engine idle speed				1		4								5		2	
	Rough idling		20		3		14					9	8	10	18	19	11	
	Misfire		5		8		10								11	12		
Poor drivability	Hesitation Poor acceleration			14	12	13	11	10				16	15	17	20	21		
	Backfire			7	4	8	6	5				10	9	11	12			
	Muffler explosion (after fire)			8	3	7	5	6					4		9	10		
	Surging												2		6			
	Knocking									1								
Engine stall	Engine stall soon after starting				9		8					4	3	5	10	11	7	
	After acceleration pedal depressed						1	3					5	6	7			
	After acceleration pedal released						3										1	
	During A/C operation										1						2	
Others	Poor fuel economy			20	16	21	18	17			19				14	15		
	Engine overheat									9								
	Engine overcool																	
	Excessive oil consumption																	
	Low oil pressure																	
	High oil pressure																	
	Starter keeps running																	
	Battery often discharge																	

HINT; When inspecting a wire harness or circuit, the electrical wiring diagrams at the end of volume 2 of repair manual should be referred to and the circuits of related systems also should be checked.

V00971

	See page	EG1–62	EG1–48	EG1–437	EG1–94	EG1–485	EG1–149	EG1–152	EG1–93	EG1–161	–	EG1–433	EG1–431	CH–6	EG1–417	BE–1	CH–10	EG1–156
	Suspect area	Valve Timing	Timing Belt	Water Pump	Valve Stem Guide Bushing	Oil Pump	Connecting Rod Bearing	Crankshaft Bearing	Cylinder Head	Piston Ring	Flywheel	Radiator and Radiator Cap	Thermostat	Drive Belt	Engine Coolant and Sender Gauge	Oil Pressure Switch	Alternator	Cylinder Block
Symptom																		
Dose not start	Engine does not crank																	
	Starter runs – engine does not crank										2							
	No initial combusion	11	12															
	No complete combusion	8	9							7								
Difficult to start	Engine cranks slowly						3	4										
	Difficult to start normally	12								11								
	Difficult to start in clod																	
	Difficult to start in hot																	
Poor idling	Incorrect first idle																	
	High engine idle speed																	
	Low engine idle speed																	
	Rough idling	16	17						22	13								
	Misfire																	
Poor drivability	Hesitation Poor acceleration	19																
	Backfire	3																
	Muffler explosion (after fire)	2																
	Surging																	
	Knocking	5		9								6	8					
Engine stall	Engine stall soon after starting																	
	After acceleration pedal depressed																	
	After acceleration pedal released																	
	During A/C operation																	
Others	Poor fuel economy	13								12								
	Engine overheat	7	5	6		10			11			3	4		13			12
	Engine overcool												2		3			
	Excessive oil consumption				3				6	5								7
	Low oil pressure					2	3	4								5		
	High oil pressure					1										2		
	Starter keeps running																	
	Battery often discharge													1			2	

V00973

Circuit Opening Relay	Fuel Cut System	Theft Deterrent Control Modele	PCME	Fuel Quality	Fuel Leakage	Coolant Leakage	Oil Leakage	Vacuum Leakage	Starter Relay.	Clutch Start SW	Starter	Spark Plug	Distributor	Ignition Coil	EG R System	Turbocharger	Accelerator Pedal Link	Brakes Drag Even When Released	Cooling Fan System	Clutch	Compression	Valve Clearance
EG1–376	EG1–411	BE–1	EG1–406	–	–	–	–	–	ST–25	CL–1	ST–5	IG–8	IG–11	IG–11	EG1–243	EG1–196	–	–	EG1–441	CL–1	EG1–32	EG1–16
		4							1	3	2											
											1											
5			15	8									1	2							10	
			12					1													6	
											1											
			20	2				1				3	16	17	6						10	
			12	4				3														
			11	3				2														
			4														1					
			9														1					
			6												3							
			21	2				1				5	6	7	4						12	15
			13	2				1				4	6	7	3						9	
			22	4				1				6	7	8	5	23		3		2	9	18
			13					1							2							
	1		11																			
			7					1				3	4	5								
			10	2								3			4				7			
			12	2				1							6							
			8									4			2							
			4												2							
			3																			
	7		22	2	1							8	9	10	6		3	5		4	11	
						1						8							2			
																			1			
							1									2					4	
							1															
								1		2												

V00972

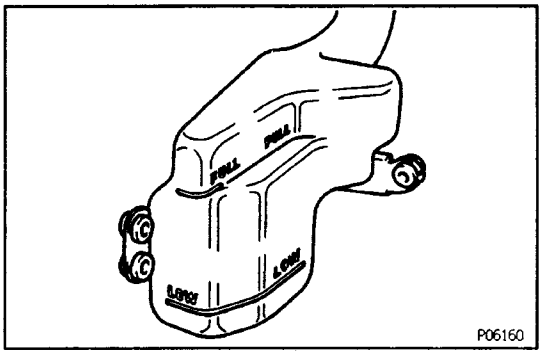

TUNE–UP

EG0VY–01

ENGINE COOLANT INSPECTION

1. CHECK ENGINE COOLANT LEVEL AT RESERVOIR TANK

The engine coolant level should be between the ” LOW” and ”FULL” lines at low temperature.

If low, check for leaks and add engine coolant up to the ”FULL” line.

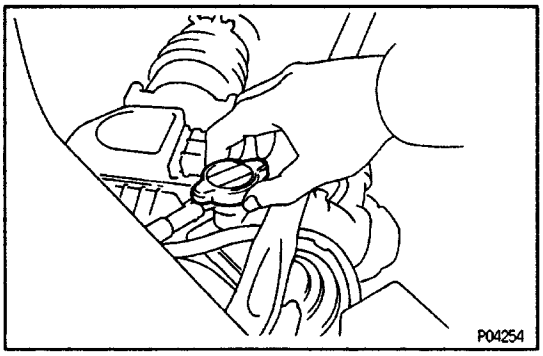

2. CHECK ENGINE COOLANT QUALITY

(a) Remove the radiator (water filler) cap.

CAUTION: To avoid the danger of being burned, do not remove it while the engine and radiator are still hot, as fluid and steam can be blown out under pressure.

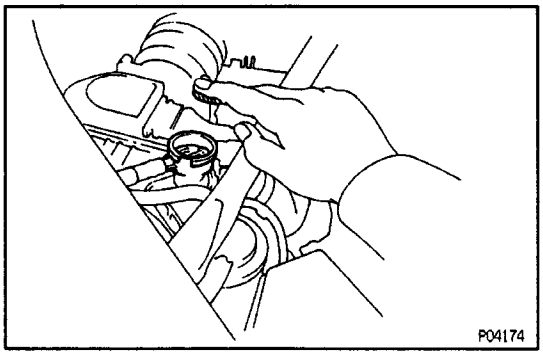

(b) There should not be any excessive deposits of rust or scales around the radiator cap or radiator filler hole, and the coolant should be free from oil.

If excessively dirty, replace the coolant.

(c) Reinstall the radiator (water filler) cap.

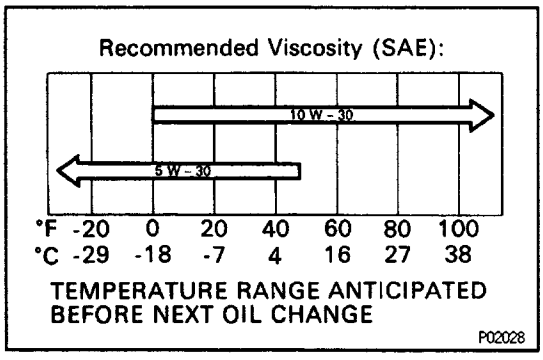

EG0B4–03

ENGINE OIL INSPECTION

1. CHECK OIL QUALITY

Check the oil for deterioration, entry of water, disco–oring or thinning.

If oil quality is poor, replace it.

Oil grade:

API grade SG Energy–Conserving II multigrade engine oil. Recommended viscosity is as shown.

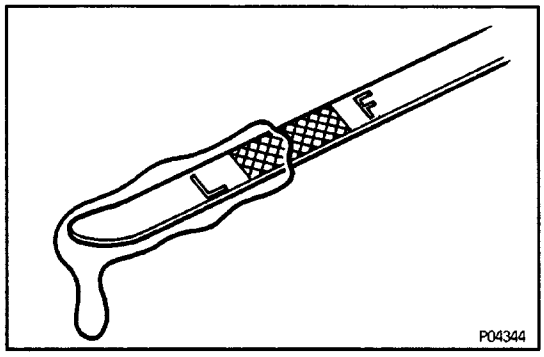

2. CHECK ENGINE OIL LEVEL

The oil level should be between the ”L” and ”F” marks on the dipstick.

If low, check for leakage and add oil up to the ”F” mark.

EG085–02

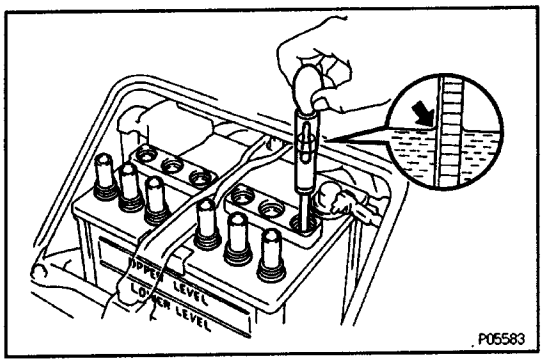

BATTERY INSPECTION

1. CHECK BATTERY SPECIFIC GRAVITY AND ELECTROLYTE LEVEL

(a) Check the electrolyte quantity of each cell.
If insufficient, refill with distilled (or purified) water.

(b) Check the specific gravity of each cell.
Standard specific gravity at 20˚C (68˚F):
1.25– 1.27
If not within specifications, charge the battery.
HINT: Check the indicator as shown in the illustration.

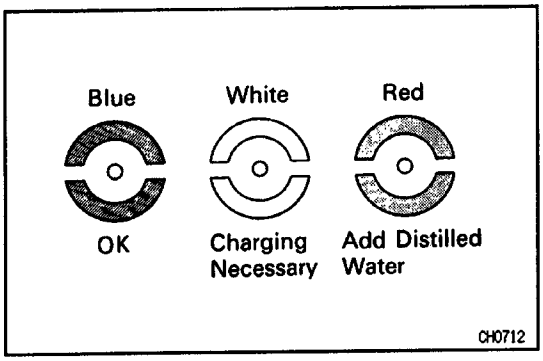

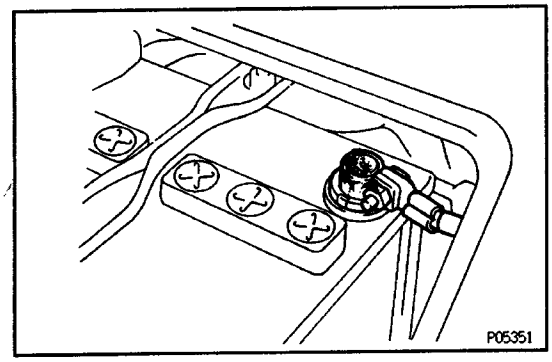

2. CHECK BATTERY TERMINALS, FUSIBLE LINK AND FUSES

(a) Check that the battery terminals are not loose or corroded.

(b) Check the fusible link and fuses for continuity.

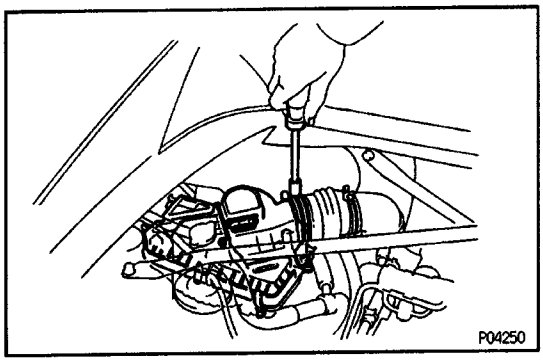

AIR FILTER INSPECTION AND CLEANING

1. REMOVE AIR FILTER

Remove the air cleaner cap and air filter.

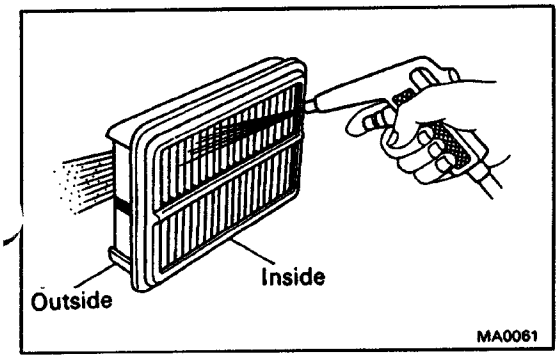

2. INSPECT AND CLEAN AIR FILTER

(a) Visually check that the air filter is not excessively damaged or only.
If necessary, replace the air filter.

(b) Clean the air filter with compressed air.
First blow from the inside thoroughly, then blow off the outside of the air filter.

3. REINSTALL AIR FILTER

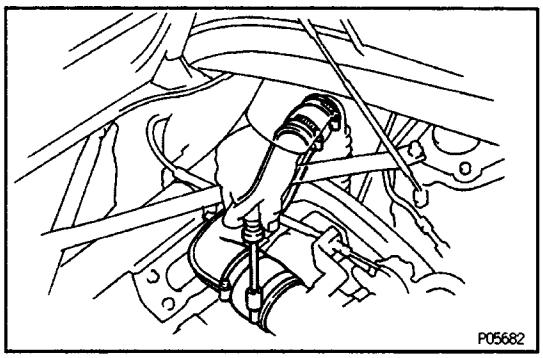

HIGH–TENSION CORDS INSPECTION EGQW0–01

1. REMOVE NO.1 INTAKE AIR CONNECTOR FROM THROTTLE BODY

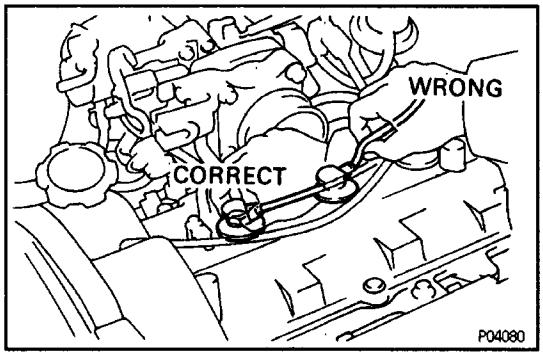

2. DISCONNECT HIGH–TENSION CORDS FROM SPARK PLUGS

Disconnect the high – tension cords at the rubber boot. Do not pull on the cords.

NOTICE: Pulling on or bending the cords may damage the conductor inside.

3. REMOVE DISTRIBUTOR CAP WITHOUT DISCONNECTING HIGH–TENSION CORDS

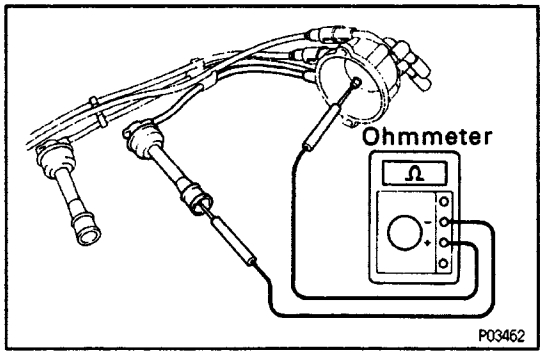

4. INSPECT HIGH–TENSION CORD RESISTANCE

Using an ohmmeter, measure the resistance without disconnecting the distributor cap.

Maximum resistance:

25 kΩ per cord

If the resistance is greater than maximum, check the terminals. If necessary, replace the high–tension cord and/or distributor cap.

5. REINSTALL DISTRIBUTOR CAP AND HIGH–TENSION CORDS

6. RECONNECT HIGH –TENSION CORDS TO SPARK PLUGS

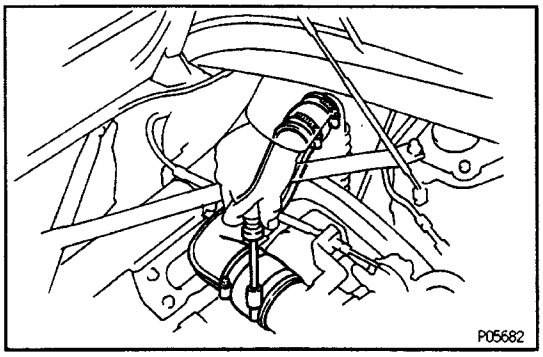

7. REINSTALL NO.1 INTAKE AIR CONNECTOR

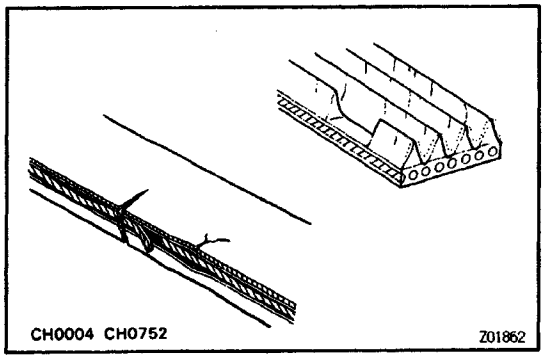

ALTERNATOR DRIVE BELT INSPECTION

INSPECT DRIVE BELTS

(a) Visually check the belt for excessive wear, frayed cords etc.

If necessary, replace the drive belt.

HINT: Cranks on the rib side of a belt are considered acceptable. If the belt has chunks missing from the ribs, it should be replaced.

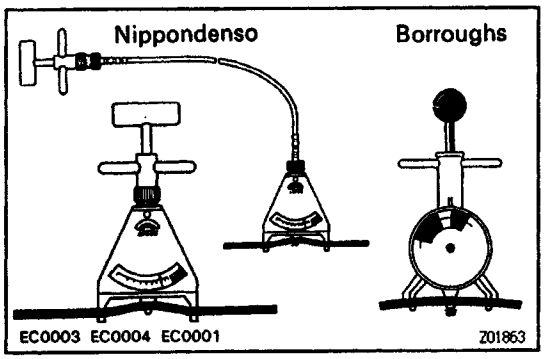

(b) Using a belt tension gauge, measure the belt tension.

Belt tension gauge:

Nippondenso BTG–20 (95506–00020)

Boroughs No. BT–33–73F

Drive belt tension:

New belt

120 t 20 lbf

Used belt

104 ± 20 lbf

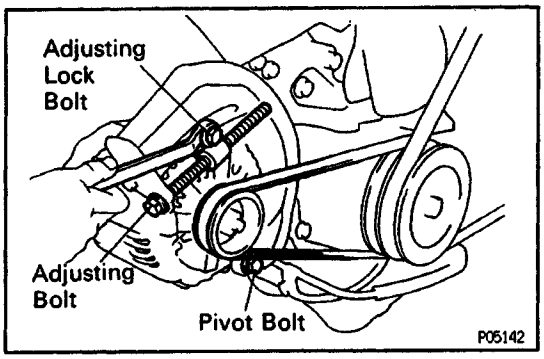

If necessary, adjust the belt tension.

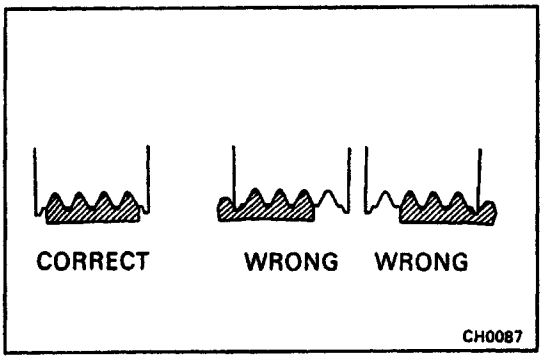

HINT:

- ”New belt” refers to a belt which has been used less than 5 minutes on a running engine.
- ”Used belt” refers to a belt which has been used on a running engine for 5 minutes or more.
- After installing the belt, check that it fits properly in the ribbed grooves.
- Check by hand to confirm that the belt has not slipped out of the groove on the bottom of the pulley.
- After installing a new belt, run the engine for about 5 minutes and recheck the belt tension.

VALVE CLEARANCE INSPECTION AND ADJUSTMENT

EGOW2–01

HINT: Inspect and adjust the valve clearance when the engine is cold.

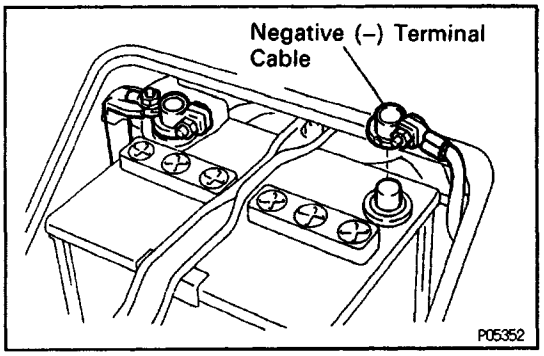

1. DISCONNECT CABLE FROM NEGATIVE TERMINAL OF BATTERY

CAUTION: Turn the ignition switch to "LOCK". Disconnect the negative terminal from the battery. Wait at least 20 seconds before proceeding with work.

2. DISCONNECT ACCELERATOR LINKAGE FROM THROTTLE BODY

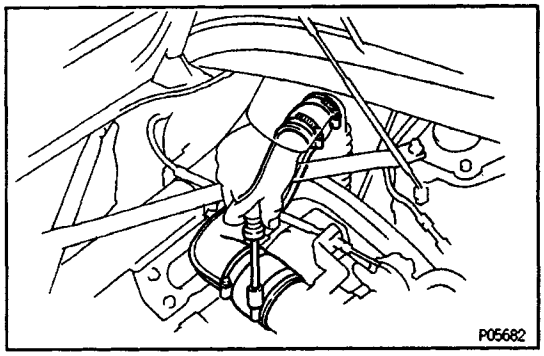

3. REMOVE N0.1 INTAKE AIR CONNECTOR

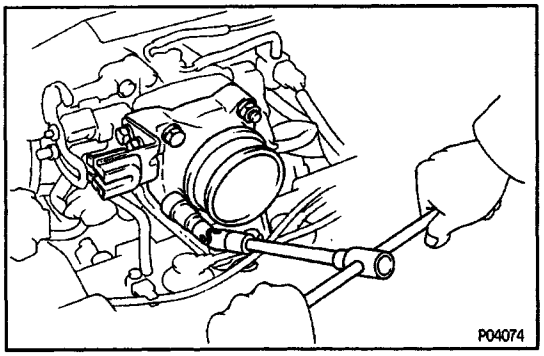

4. REMOVE INTAKE AIR CONNECTOR

Remove the two bolts, two nuts and intake air connector.

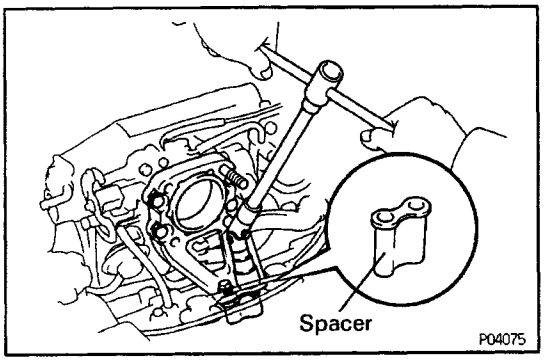

5. REMOVE INTAKE AIR CONNECTOR STAY

(a) Remove the six bolts and intake air connector stay.
(b) Remove the spacer.

6. REMOVE THROTTLE BODY

(a) Disconnect the following connector:
Throttle position sensor connector
IACV connector

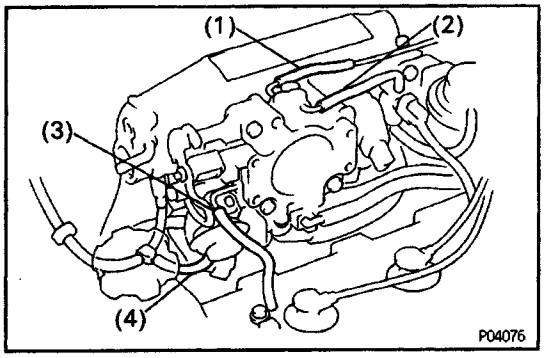

(b) Disconnect the following hoses:
(1) Vacuum hose from port ”P” of throttle body
(2) Vacuum hose from port ”E” of throttle body
(3) PCV hose from port PCV of throttle body
(4) Vacuum hose from throttle body opener

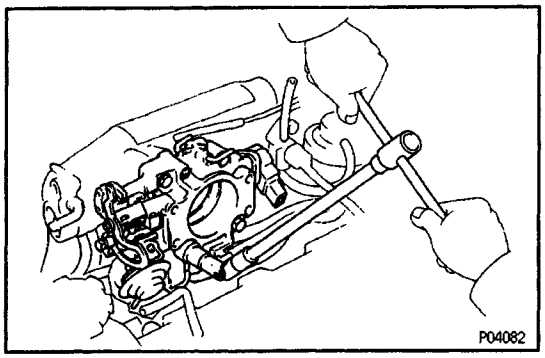

(c) Remove the four bolts, and disconnect the throttle body from the intake manifold.
(d) Remove the throttle body gasket.

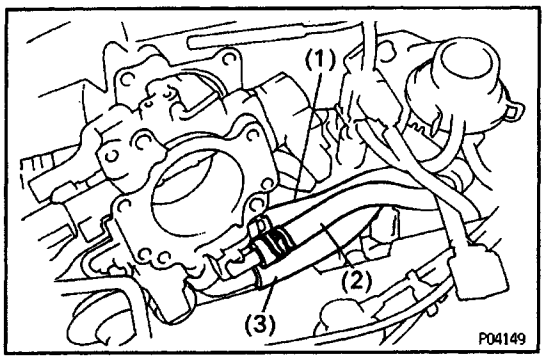

(e) Disconnect the following hoses from the throttle body, and remove the throttle body:
(1) Water by–pass hose (from upper side of No. 1 air tube)
(2) Water by–pass hose (from lower side of No. 1 air tube)
(3) Air hose (from No. 1 air tube)

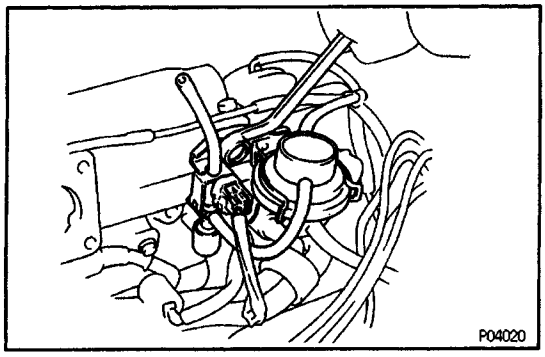

7. REMOVE CYLINDER HEAD COVER

(a) Remove the bolt, and disconnect the VSV and EGR vacuum modulator assembly from the intake mani–fold.

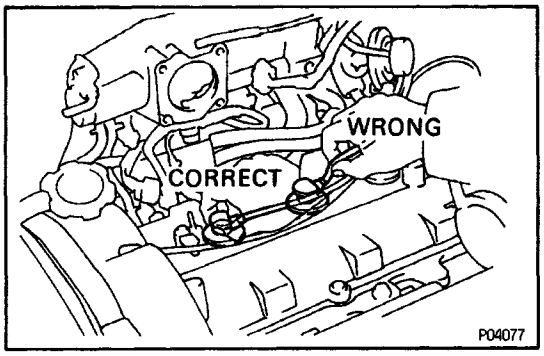

(b) Disconnect the high – tension cords at the rubber boot. Do not pull on the high–tension cords.
NOTICE: Pulling on or bending the cords may damage the conductor inside.

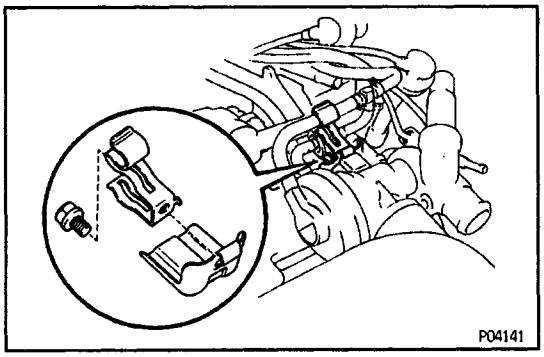

(c) Disconnect the hose and VTV from the clamps.
(d) Remove the bolt and two clamps.

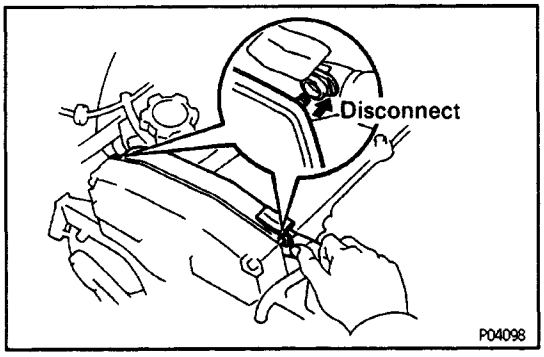

(e) Disconnect the engine wire protector between the No. 3 timing belt cover and cylinder head cover.

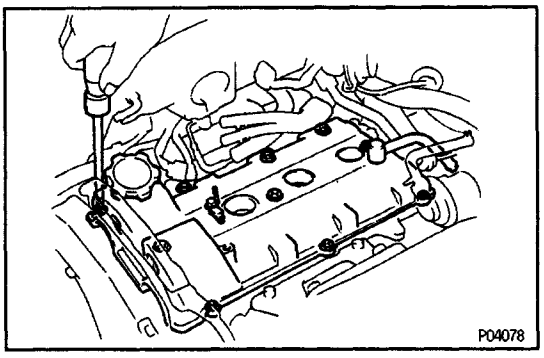

(f) Remove the ten screws, seal washers bolts, head cover and two gaskets.

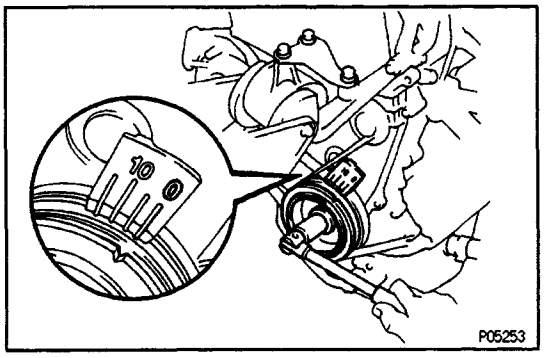

8. SET NO.1 CYLINDER TO TDC/COMPRESSION

(a) Turn the crankshaft pulley and align its groove with timing mark ”0” of the No.1 timing belt cover.
(b) Check that the valve lifters on the No.1 cylinder are loose and valve lifters on the No.4 are tight.
If not, turn the crankshaft one revolution (360˚) and align the mark as above.

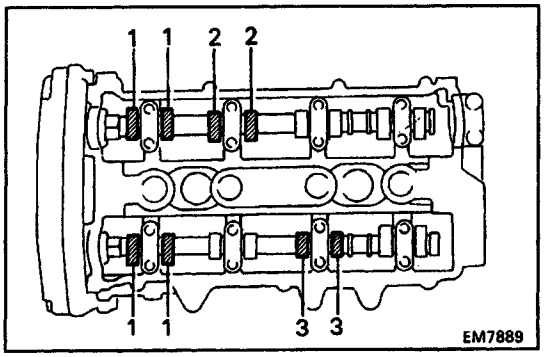

9. INSPECT VALVE CLEARANCE

(a) Check only the valves indicated.

- Using a feeler gauge, measure the clearance be–tween the valve lifter and camshaft.
- Record the out– of –specification valve clear–ance measurements. They will be used later to determine the required replacement adjusting shim.

Valve clearance (Cold):

Intake

0.15 – 0.25 mm (0.006 – 0.010 in.)

Exhaust

0.28 – 0.38 mm (0.011 – 0.015 in.)

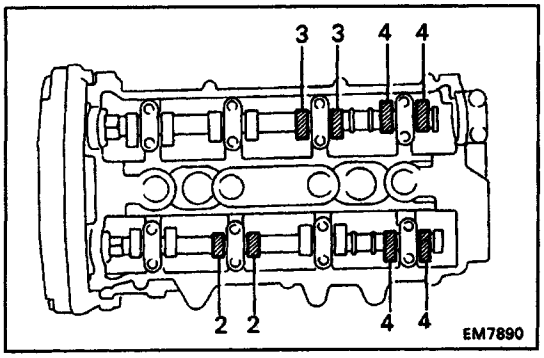

(b) Turn the crankshaft one revolution (360'*) and align the mark as above. (See procedure in step 8)

(c) Check only the valves indicated as shown. Measure the valve clearance. (See procedure in step (a))

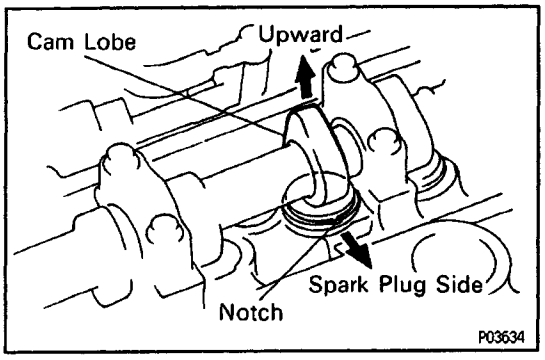

10. ADJUST VALVE CLEARANCE

(a) Remove the adjusting shim.

- Turn the crankshaft so that the cam lobe of the camshaft on the adjusting valve upward.
- Position the notch of the valve lifter facing the spark plug side.

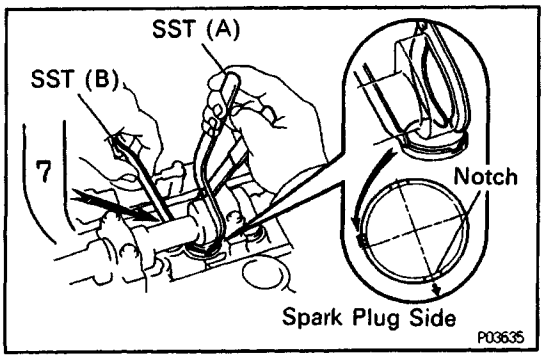

- Using SST (A), press down the valve lifter and place SST (B) between the camshaft and valve lifter. Remove SST (A).

SST 09248–55020 (09248–05011, 09248–05021)

HINT: Apply SST (B) at slight angle on the side marked with "7", at the position shown in the illustration.

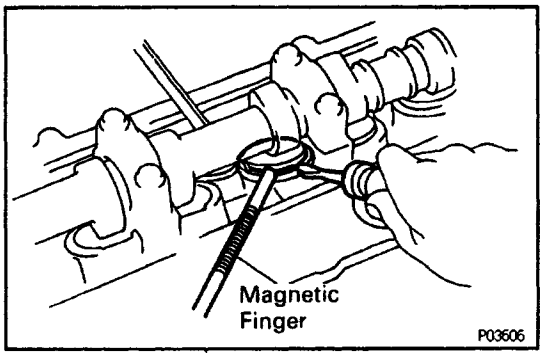

- Remove the adjusting shim with a small screw–driver and magnetic finger.

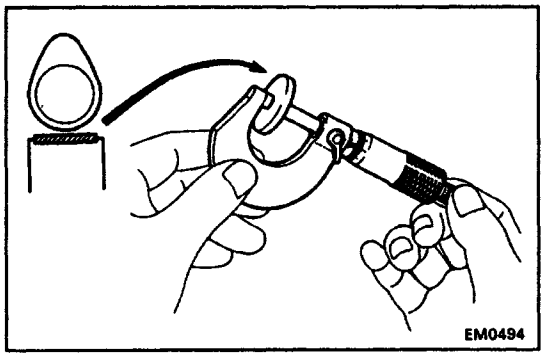

(b) Determine the replacement adjusting shim size by following the Formula or Charts:

- Using a micrometer, measure the thickness of the removed shim.
- Calculate the thickness of a new shim so that the valve clearance comes within specified value.
  T ..... Thickness of removed shim
  A ..... Measured valve clearance
  N ..... Thickness of new shim

Intake:

N = T + (A – 0.20 mm (0.008 in.))

Exhaust:

N = T + (A – 0.33 mm (0.013 in.))

- Select a new shim with a thickness as close as possible to the calculated value.

HINT: Shims are available in seventeen sized in in–crements of 0.05 mm (0.0020 in.), from 2.50 mm (0.0984 in.) to 3.30 mm (0.1299 in.).

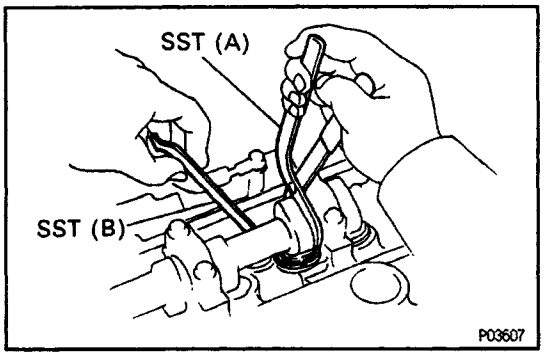

(c) Install a new adjusting shim.

- Place a new adjusting shim on the valve lifter. Using SST (A), press down the valve lifter and remove SST (B).
- SST 09248 – 55020 (09248 – 05011, 09248 – 05021)

(d) Recheck the valve clearance.

Adjusting Shim Selection Chart (Intake)

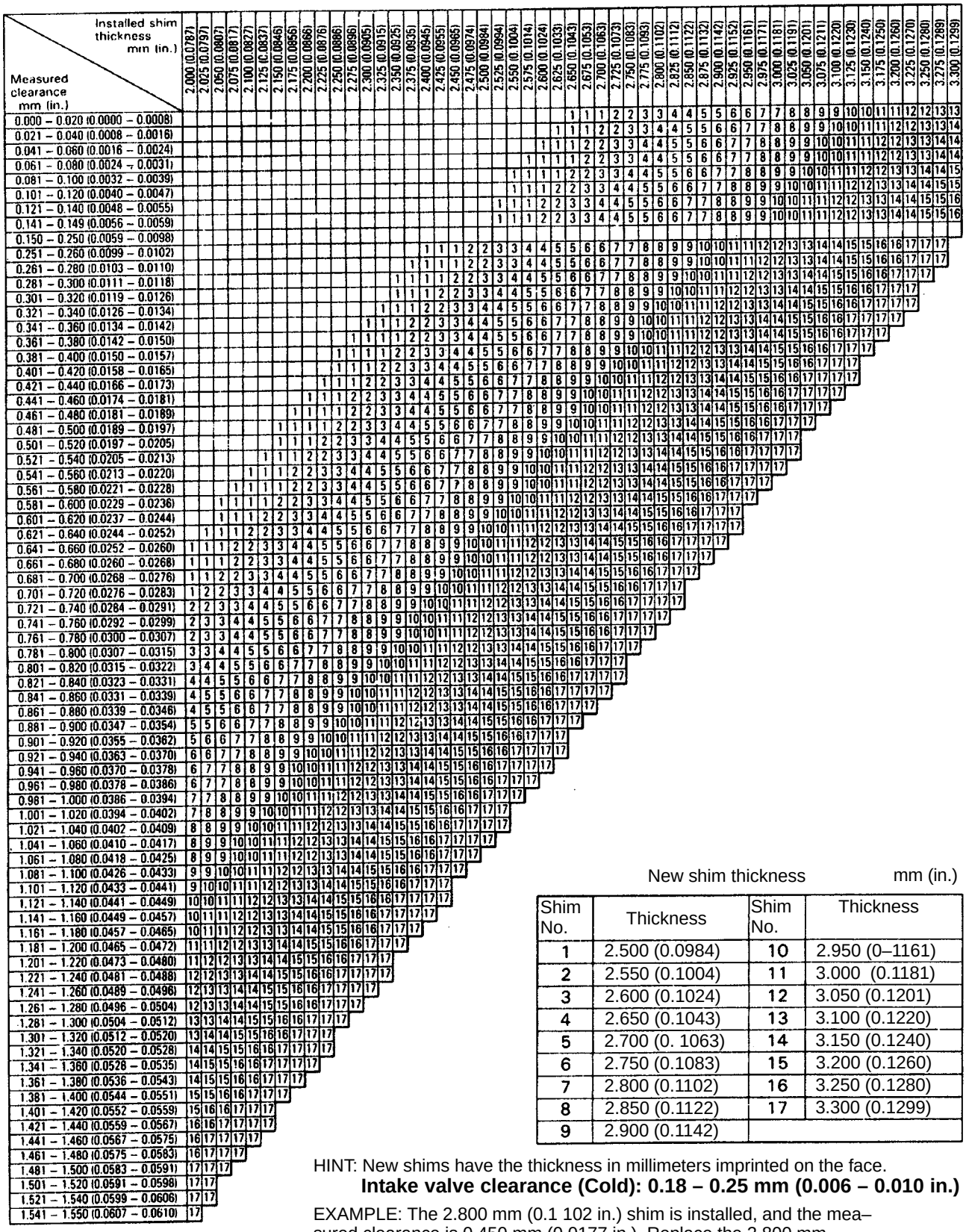

P03531

New shim thickness mm (in.)

Shim No.	Thickness	Shim No.	Thickness
1	2.500 (0.0984)	10	2.950 (0–1161)
2	2.550 (0.1004)	11	3.000 (0.1181)
3	2.600 (0.1024)	12	3.050 (0.1201)
4	2.650 (0.1043)	13	3.100 (0.1220)
5	2.700 (0. 1063)	14	3.150 (0.1240)
6	2.750 (0.1083)	15	3.200 (0.1260)
7	2.800 (0.1102)	16	3.250 (0.1280)
8	2.850 (0.1122)	17	3.300 (0.1299)
9	2.900 (0.1142)		

HINT: New shims have the thickness in millimeters imprinted on the face.

Intake valve clearance (Cold): 0.18 – 0.25 mm (0.006 – 0.010 in.)

EXAMPLE: The 2.800 mm (0.1 102 in.) shim is installed, and the mea–sured clearance is 0.450 mm (0.0177 in.). Replace the 2.800 mm (0.1 102 in.) shim with a new No. 12 shim.

V00846

Adjusting Shim Selection Chart (Exhaust)

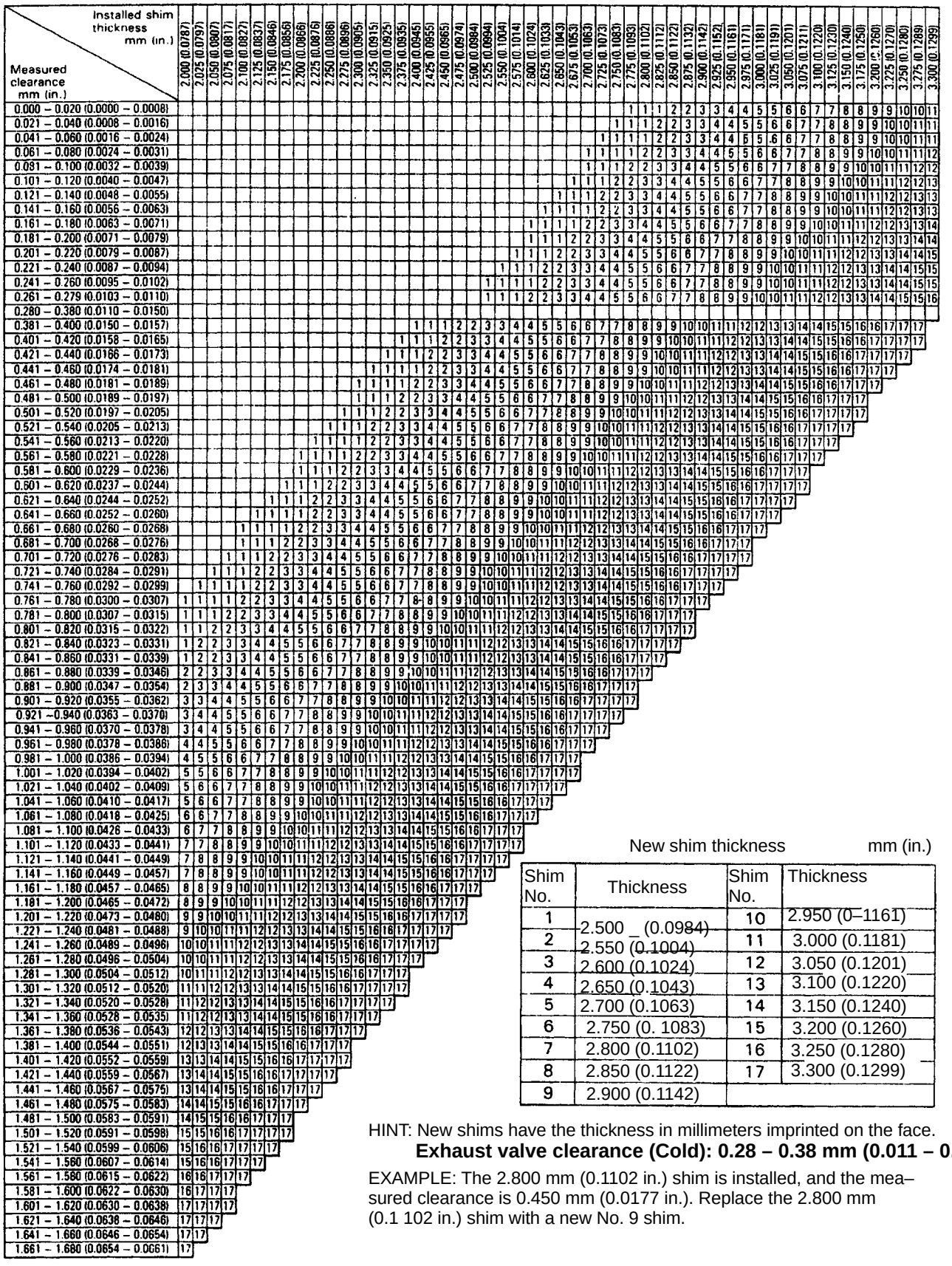

New shim thickness mm (in.)

Shim No.	Thickness	Shim No.	Thickness
1	2.500 _ (0.0984)	10	2.950 (0–1161)
2	2.550 (0.1004)	11	3.000 (0.1181)
3	2.600 (0.1024)	12	3.050 (0.1201)
4	2.650 (0.1043)	13	3.100 (0.1220)
5	2.700 (0.1063)	14	3.150 (0.1240)
6	2.750 (0. 1083)	15	3.200 (0.1260)
7	2.800 (0.1102)	16	3.250 (0.1280)
8	2.850 (0.1122)	17	3.300 (0.1299)
9	2.900 (0.1142)		

HINT: New shims have the thickness in millimeters imprinted on the face.

Exhaust valve clearance (Cold): 0.28 – 0.38 mm (0.011 – 0.015 in.)

EXAMPLE: The 2.800 mm (0.1102 in.) shim is installed, and the mea–sured clearance is 0.450 mm (0.0177 in.). Replace the 2.800 mm (0.1 102 in.) shim with a new No. 9 shim.

P03532

V00847

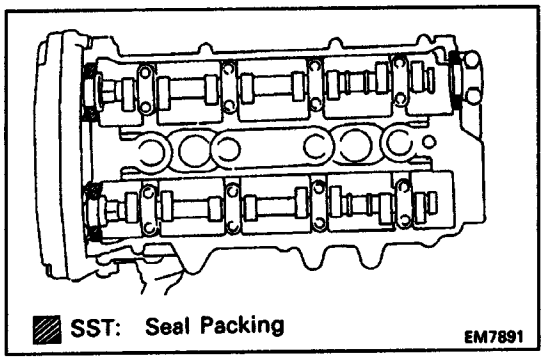

11. REINSTALL CYLINDER HEAD COVER

(a) Remove any old packing (FIPG) material.

(b) Apply seal packing to the cylinder head as shown in the illustration.

Seal packing:

Part No. 08826–00080 or equivalent

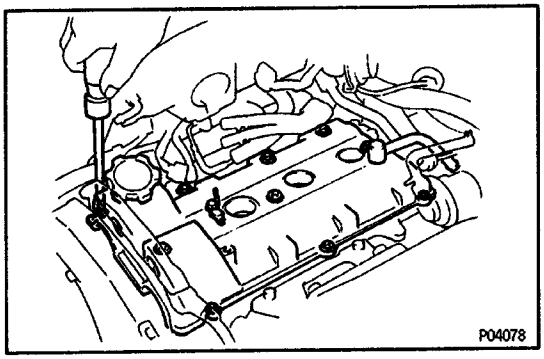

(c) Install the two gaskets to the cylinder head cover.

(d) Install the cylinder head cover with the ten seal washers and screws.

Torque: 2.5 N–m (25 kgf–cm, 21 in–lbf)

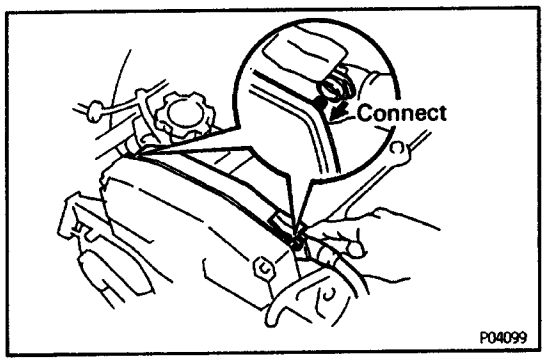

(e) Install the two clamps of the engine wire protector to each bolt.

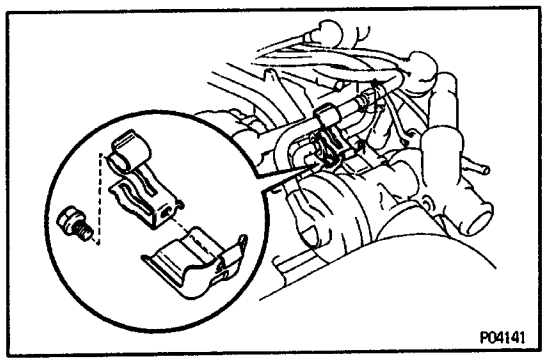

(f) Install the two clamps.

(g) Connect the VTV and hose to the clamp.

(h) Connect the high–tension cords.

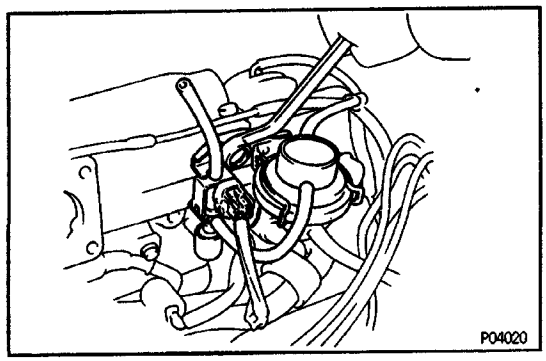

(i) Install the VSV and EGR vacuum modulator assembly with the bolt.

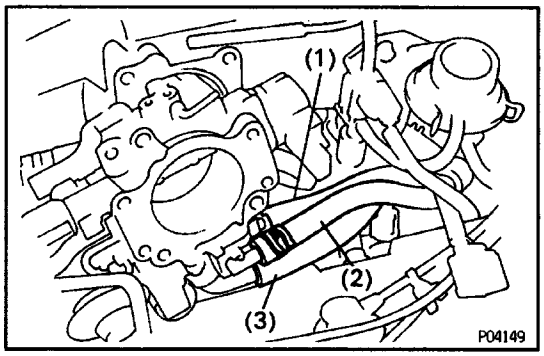

12. REINSTALL THROTTLE BODY

(a) Connect the following hoses to the throttle body:
(1) Water by–pass hose (from upper side of No. 1 air tube)
(2) Water by–pass hose (from lower side of No. 1 air tube)
(3) Air hose (from No. 1 air tube)

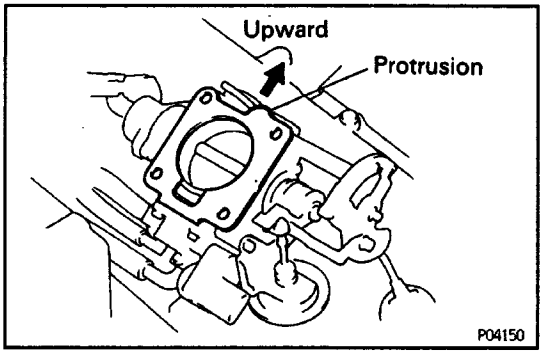

(b) Install a new gasket to the throttle body.

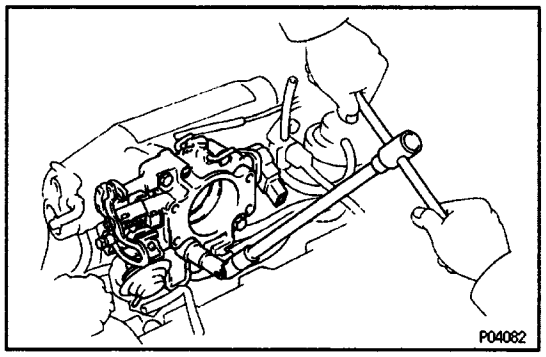

(c) Install the throttle body with the four bolts.
Torque: 19 N–m (195 kgf–cm, 14 ft–lbf)
HINT: Different bolt lengths are used for the upper and lower sides.
Bolt length:
45 mm (1.77 in.) for upper side
70 mm (2.76 in.) for lower side

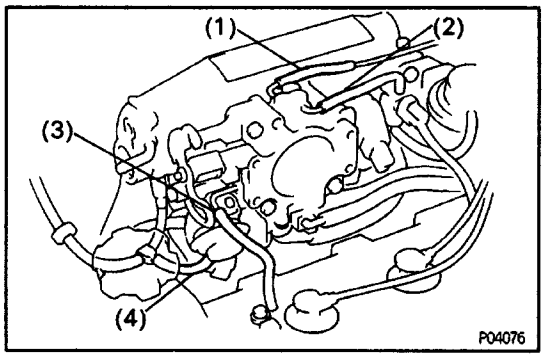

(d) Connect the following hoses:
(1) Vacuum hose to port ”P” of throttle body
(2) Vacuum hose to port ”E” of throttle body
(3) PCV hose to port PCV of throttle body
(4) Vacuum hose to throttle body opener
(e) Connect the following connector:
- Throttle position sensor connector
- IACV connector

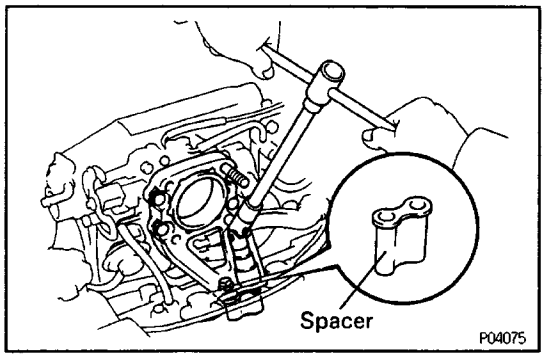

13. REINSTALL INTAKE AIR CONNECTOR STAY

(a) Install the spacer.
(b) Install the intake air connector stay with the six bolts.
Torque:
7.8 N–m (80 kgf–cm, 69 in.–lbf) for 10 mm head
19 N–m (195 kgf–cm, 14 ft–lbf) for 12 mm head

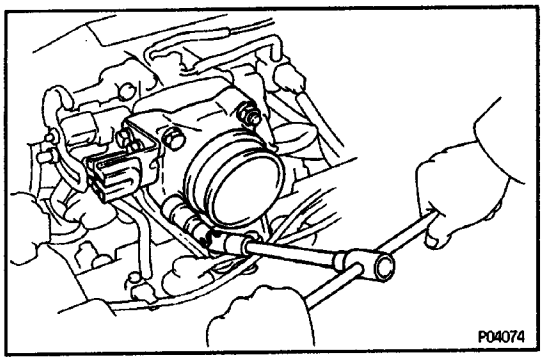

14. REINSTALL INTAKE AIR CONNECTOR

Install the intake air connector with the two bolts and two nuts.

Torque: 19 N–m(195 kgf–cm, 14 ft–lbf)

15. RECONNECT ACCELERATOR LINKAGE TO THROTTLE BODY

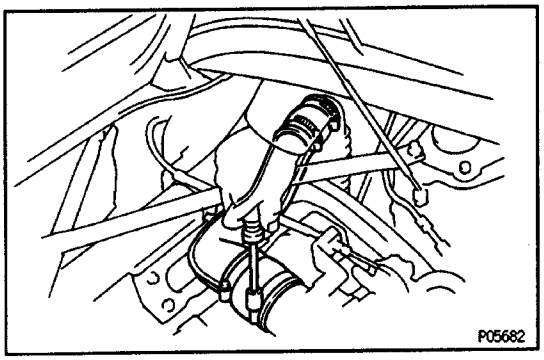

16. REINSTALL NO.1 INTAKE AIR CONNECTOR

17. RECONNECT CABLE TO NEGATIVE TERMINAL OF BATTERY

IGNITION TIMING INSPECTION AND ADJUSTMENT EGOXS–01

1. REMOVE RH ENGINE HOOD SIDE PANEL

2. WARM UP ENGINE

Allow the engine to warm up to normal operating temperature.

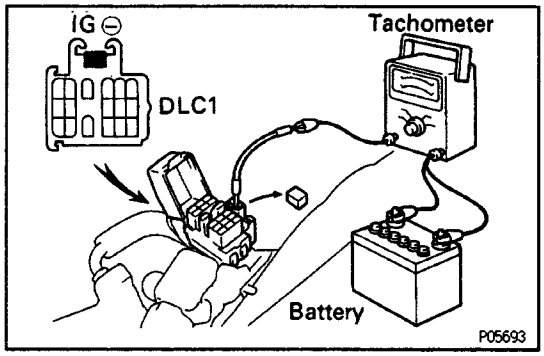

3. CONNECT TACHOMETER AND TIMING LIGHT TO ENGINE

Connect the test probe of a tachometer to terminal IG – of the data link connector 1.

NOTICE:

- **Never allow the tachometer terminal to touch ground as it could result in damage to the igniter and/or ignition coil.**
- **As some tachometers are not compatible with this ignition system, we recommend that you confirm the compatibility of your unit before use.**

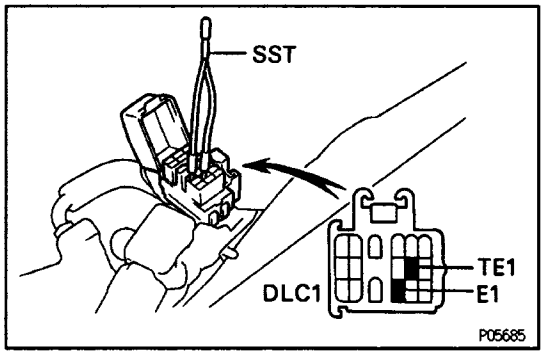

4. ADJUST IGNITION TIMING

(a) Using SST, connect terminals TE1 and E1 of the the data link connector 1.
SST 09843–18020

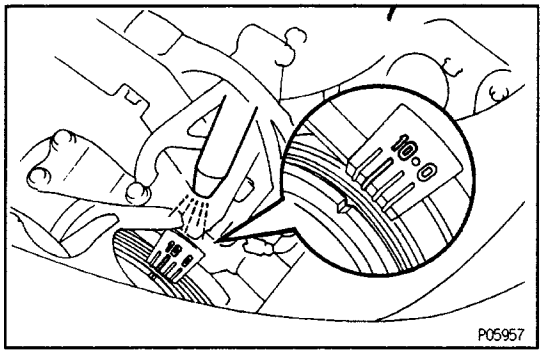

(b) Using a timing light, check the ignition timing.
Ignition timing:
10° BTDC @ idle
(Transmission in neutral position)

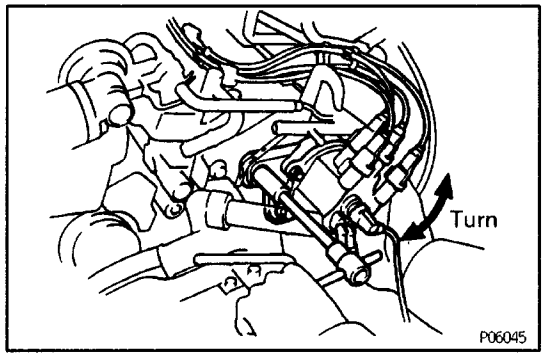

(c) Loosen the two mounting bolts, and adjust the ignition timing by turning the distributor.

(d) Tighten the two mounting bolts, and recheck the ignition timing.
Torque: 39 N–m (400 kgf–cm, 29 ft–lbf)

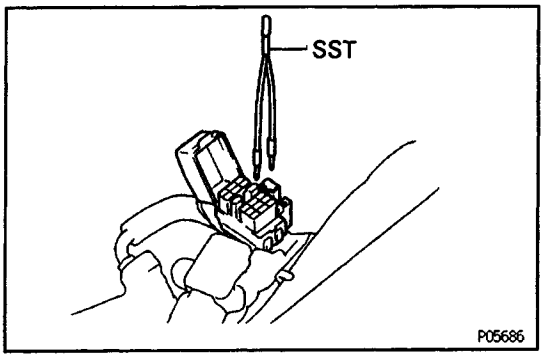

(e) Remove the SST from the data link connector 1.
SST 09843–18020

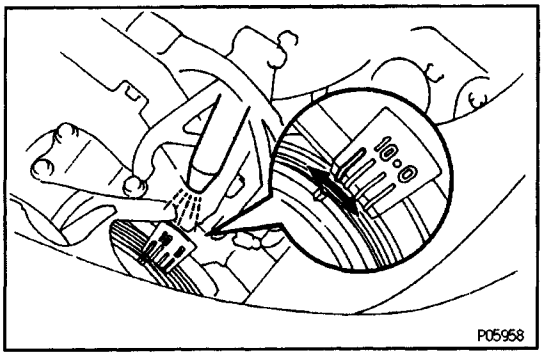

5. FURTHER CHECK IGNITION TIMING

Ignition timing:

12 – 21°BTDC @ idle

(Transmission in neutral position)

HINT: The timing mark moves in a range between 12˚ and 21˚.

6. DISCONNECT TACHOMETER AND TIMING LIGHT FROM ENGINE

7. REINSTALL RH ENGINE HOOD SIDE PANEL

EGGW3–01

IDLE SPEED INSPECTION

1. INITIAL CONDITIONS

(a) Engine at normal operating temperature
(b) Air cleaner installed
(c) All pipes and hoses of air induction system connected
(d) All accessories switched OFF
(e) All vacuum lines properly connected
HINT: All vacuum hoses for EGR systems, etc. should be properly connected.
(f) SMPI system wiring connectors fully plugged
(g) Ignition timing set correctly
(h) Transmission in neutral position

2. CONNECT TACHOMETER

(See step 2 in Ignition Timing Inspection and Adjustment)

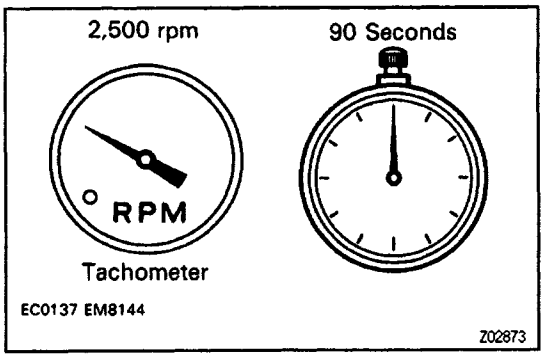

3. INSPECT IDLE SPEED

(a) Race the engine speed at 2,500 rpm for approx. 90 seconds.

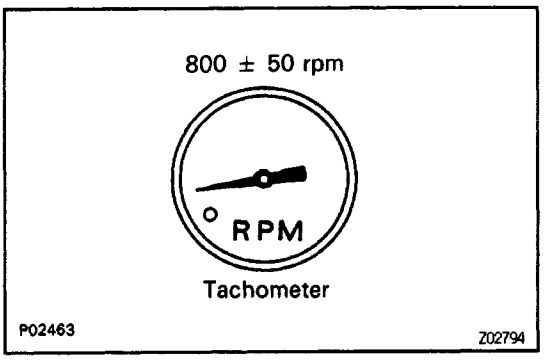

(b) Check the idle speed.

Idle speed:

800 ± 50 rpm

If the idle speed is not as specified, check the IACV.

4. DISCONNECT TACHOMETER

LUBRICATION SYSTEM

DESCRIPTION

EG10J–01

A fully pressurized, fully filtered lubrication system has been adopted for this engine.

OPERATION

EG07R–03

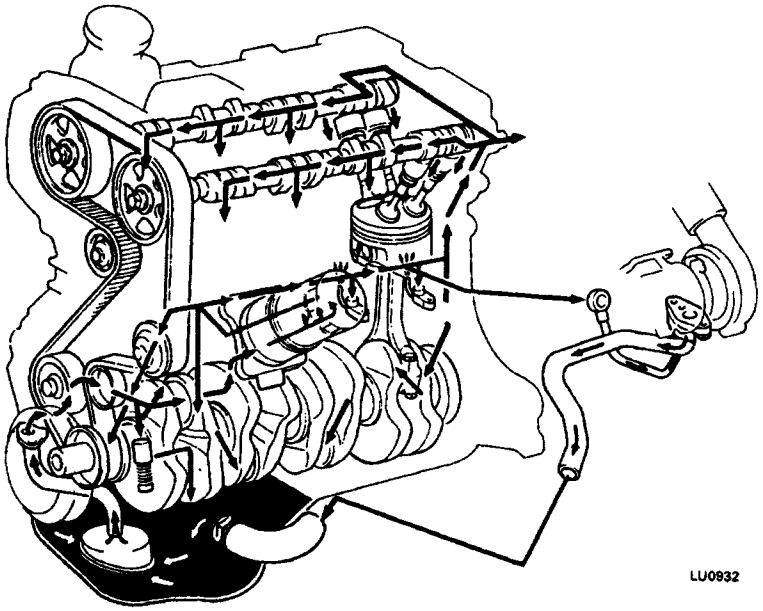

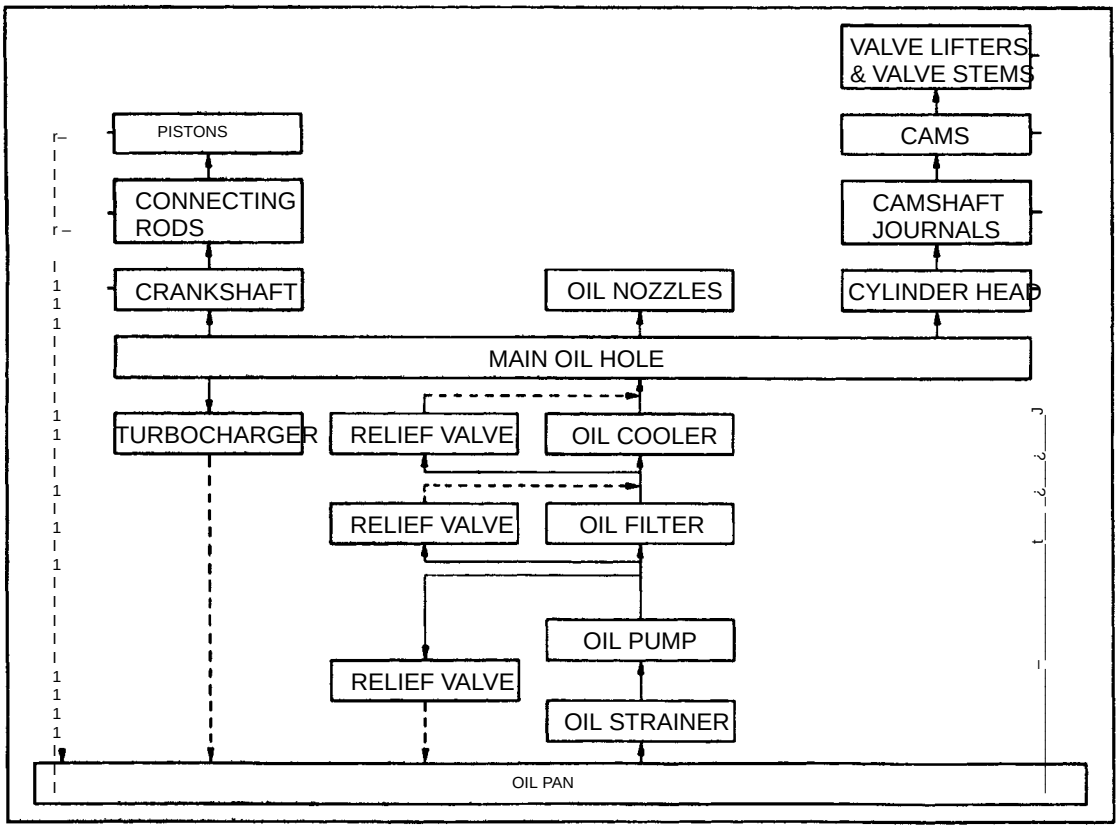

Z02850

OIL AND FILTER REPLACEMENT

EG10G–01

CAUTION:

- Prolonged and repeated contact with mineral oil will result in the removal of natural fats from the skin, leading to dryness, irritation and dermatitis. In addition, used engine oil contains potentially harmful contaminants which may cause skin cancer.
- Care should be taken, therefore, when changing engine, oil to minimize the frequency and length of time your skin is exposed to used engine oil. Protective clothing and gloves that cannot be penetrated by oil should be worn. The skin should be thoroughly washed with soap and water, or use water – less hand cleaner, to remove any used engine oil. Do not use gasoline. thinners, or solvents.
- In order to preserve the environment, used oil and used oil filter must be disposed of only at designated disposal sites.

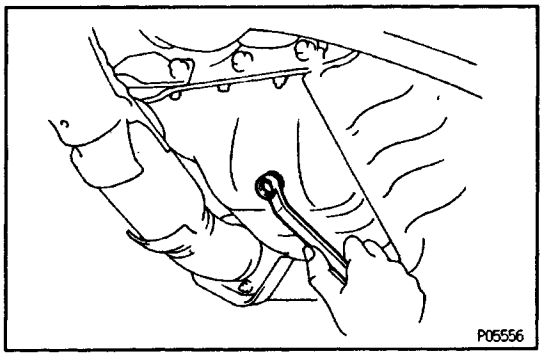

1. DRAIN ENGINE OIL

(a) Remove the oil filler cap.

(b) Remove the oil drain plug, and drain the oil into a container.

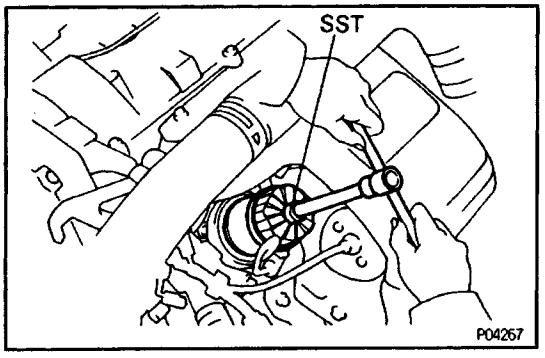

2. REPLACE OIL FILTER

(a) Using SST, remove the oil filter.
SST 09228–06500

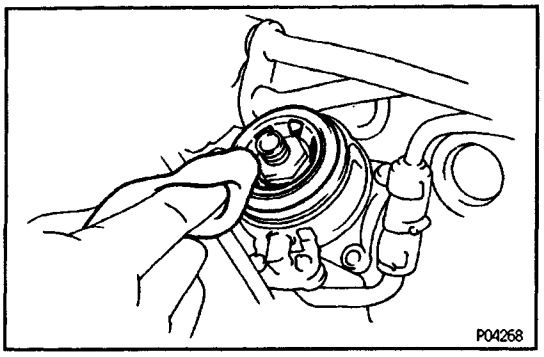

(b) Clean the oil filter contact surface on the oil filter mounting.

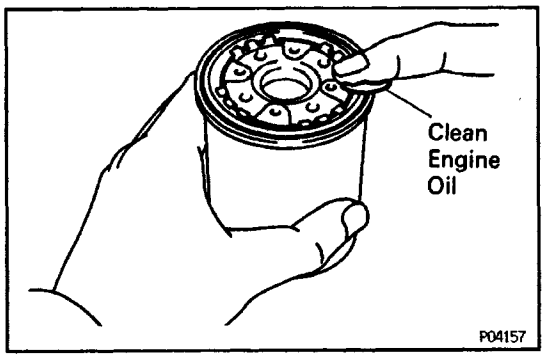

(c) Lubricate the filter rubber gasket with clean engine oil.

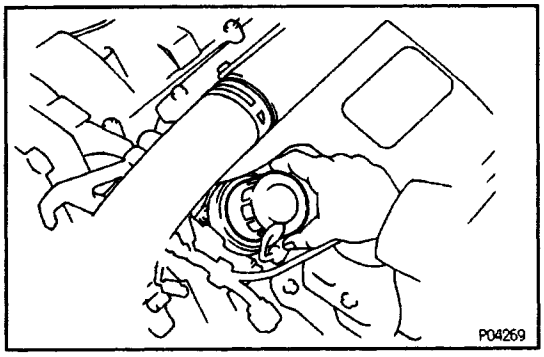

(d) Tighten the oil filter by hand until the rubber gasket contacts the seat of the filter mounting.

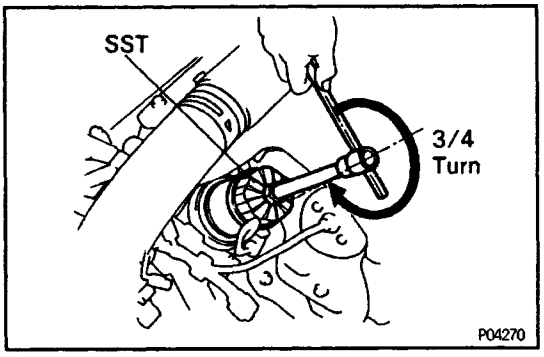

(e) Using SST, give it an additional 3/4 turn to seat the filter.
SST 09228–06500

3. FILL WITH ENGINE OIL

(a) Clean and install the oil drain plug with a new gasket.
Torque: 39 N–m (400 kgf–cm, 29 ft–lbf)

(b) Fill with new engine oil.
Oil grade: See step 1 Oil Pressure Check
Capacity:
Drain and refill
w/ Oil filter change
3.9 liters (4.1 US qts, 3.4 Imp. qts)
w/o Oil filter change
3.6 liters (3.8 US qts, 3.2 Imp. qts)
Dry fill
4.3 liters (4.5 US qts. 3.8 Imp. qts)

(c) Reinstall the oil filler cap.

4. START ENGINE AND CHECK FOR OIL LEAKS

5. RECHECK ENGINE OIL LEVEL

OIL COOLER

EG10B–01

COMPONENTS FOR REMOVAL AND INSTALLATION

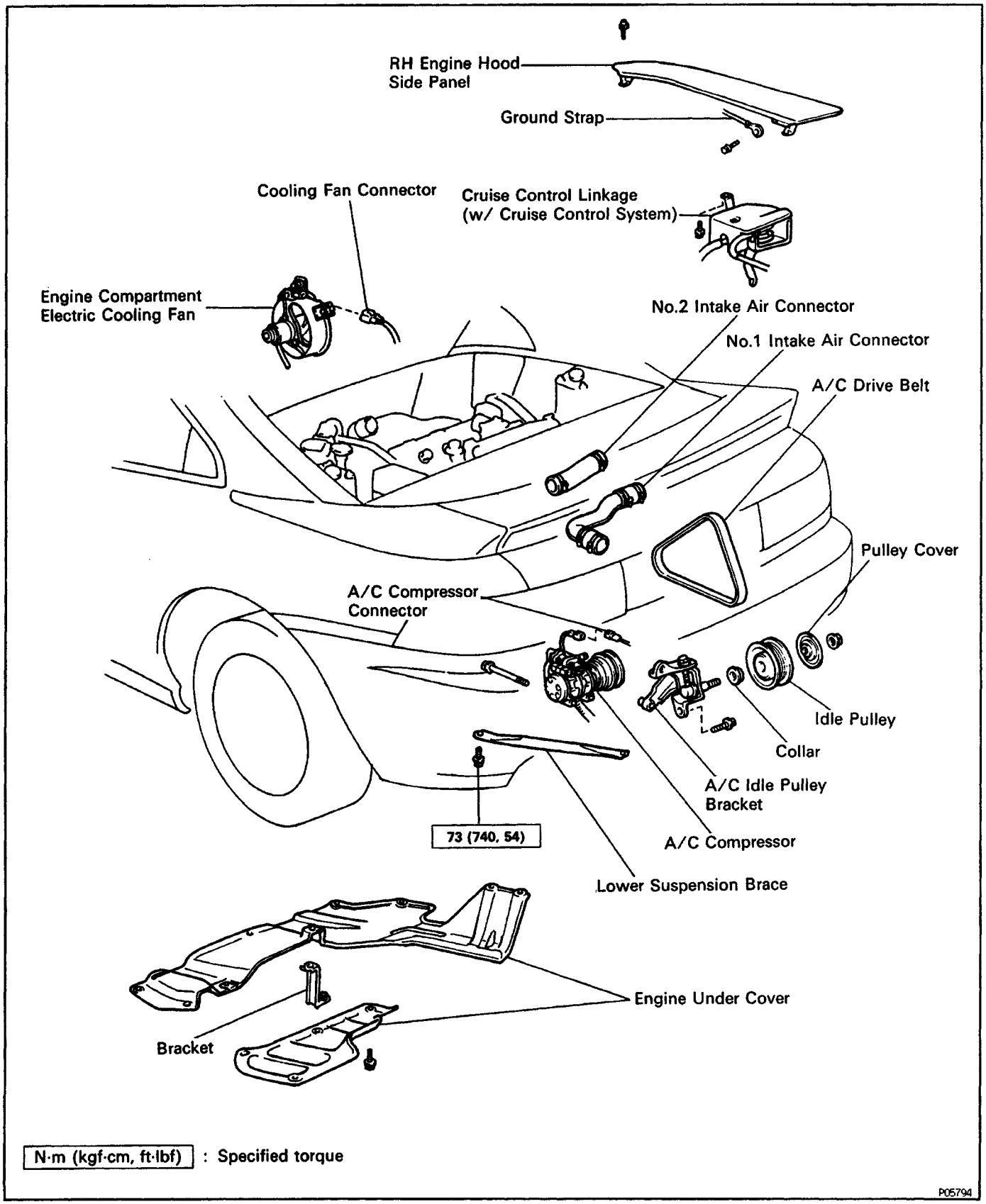

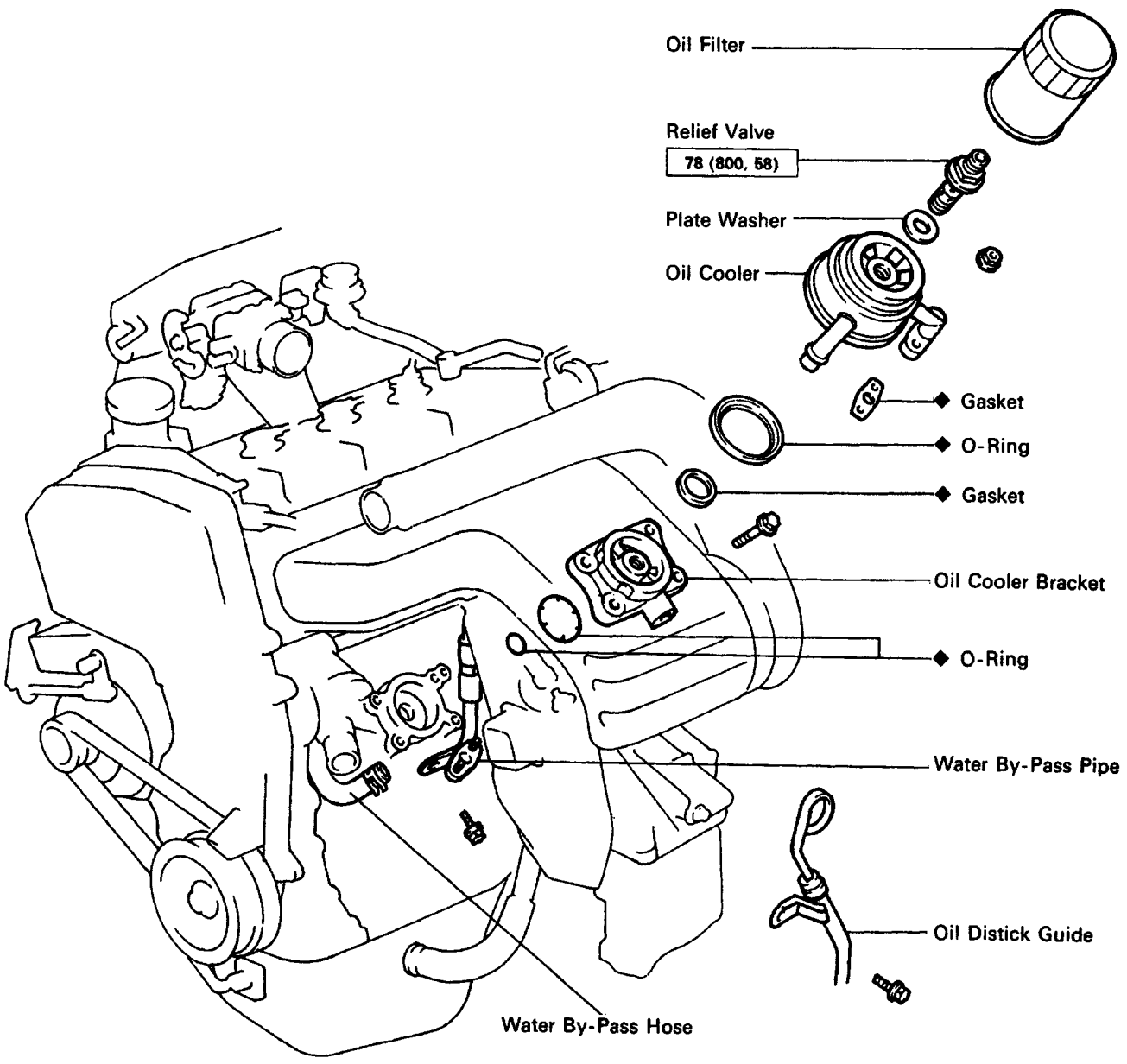

N·m (kgf·cm, ft·lbf) : Specified torque
◆ Non-reusable part

P05862

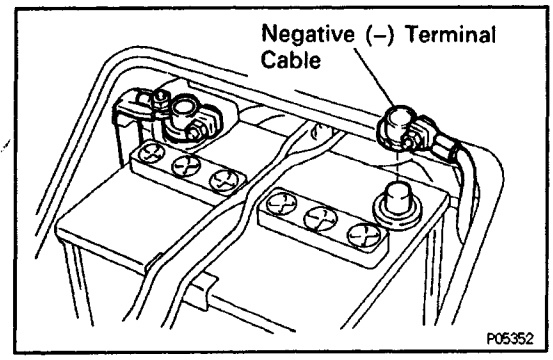

OIL COOLER REMOVAL

(See Components for Removal and Installation)

1. DISCONNECT CABLE FROM NEGATIVE TERMINAL OF BATTERY

CAUTION: Turn the Ignition switch to ”LOCK”. Disconnect the negative terminal from the battery. Wait et least 20 seconds before proceeding with work.

2. DRAIN ENGINE COOLANT

3. REMOVE ENGINE UNDER COVERS

4. REMOVE RH ENGINE HOOD SIDE PANEL

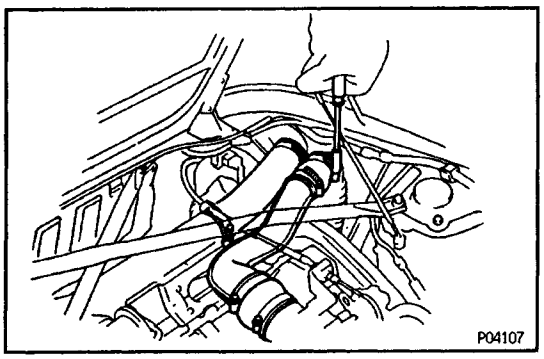

5. REMOVE NO.1 AND NO.2 INTAKE AIR CONNECTORS

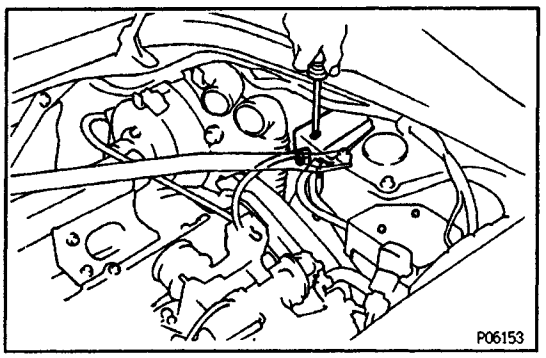

6. (w/ CRUISE CONTROL SYSTEM) DISCONNECT CRUISE CONTROL ACCELERATOR LINKAGE

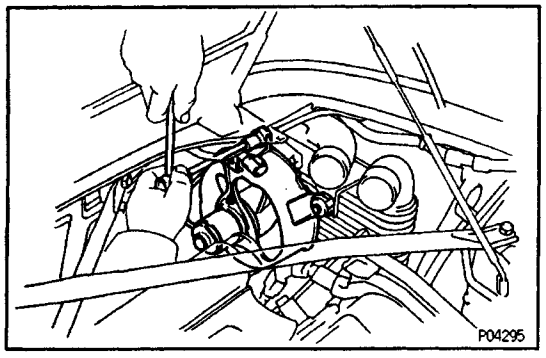

7. REMOVE ENGINE COMPARTMENT ELECTRIC COOLING FAN

(a) Disconnect the cooling fan connector.

(b) Loosen the three bolts, and remove the cooling fan.

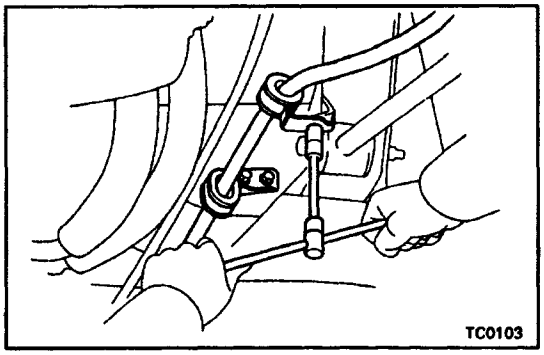

8. DISCONNECT A/C COMPRESSOR FROM ENGINE

(a) Remove the three clamp bolts, and disconnect the parking brake cable.

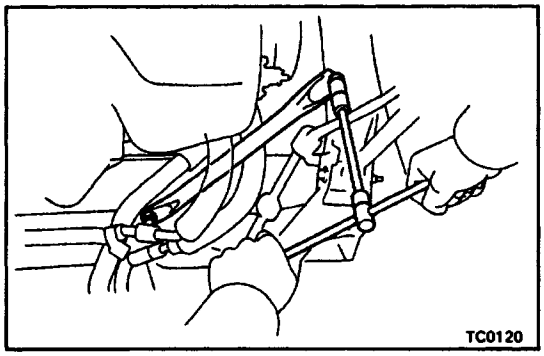

(b) Remove the two bolts and lower suspension brace.

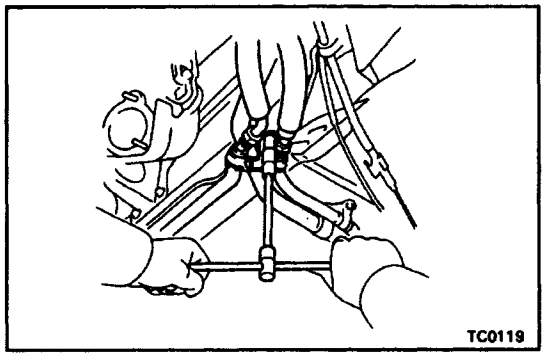

(c) Remove the clamp nut, and disconnect the two A/C pipes.

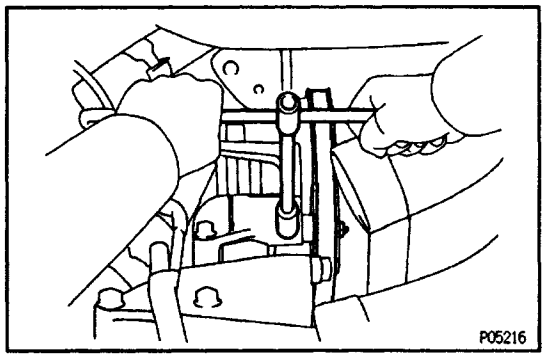

(d) Loosen the idler pulley nut.
(e) Loosen the adjusting bolt, and remove the drive belt.

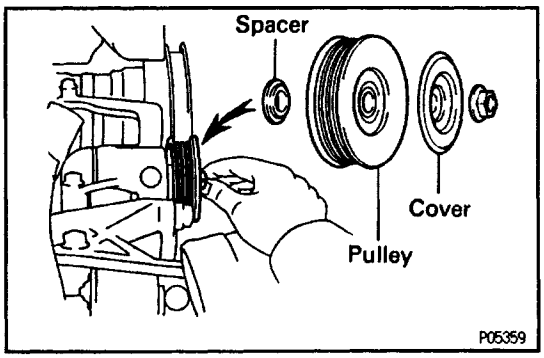

(f) Remove the nut, pulley cover, idler pulley and spacer.

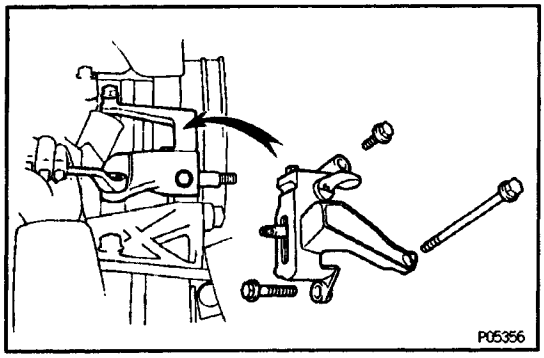

(g) Disconnect the A/C compressor connector.
(h) Remove the three bolts and idler pulley bracket.

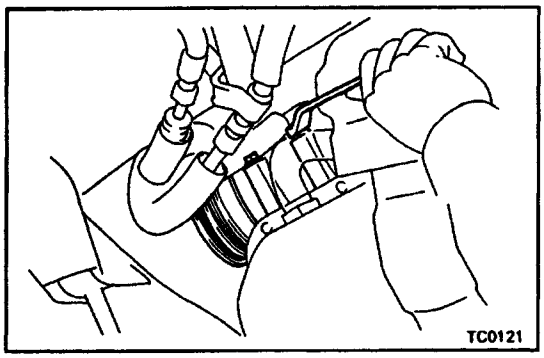

(i) Remove the two bolts, and disconnect the A/C com–pressor from the engine.

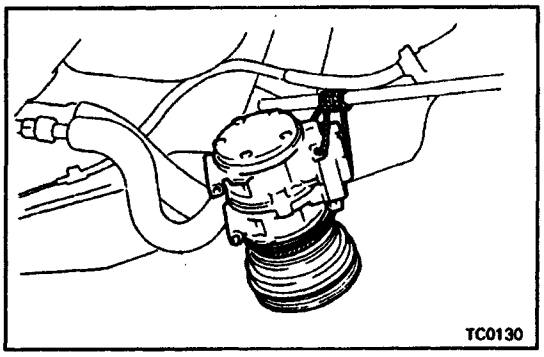

HINT: Suspend the A/C compressor to strut rod with a string.

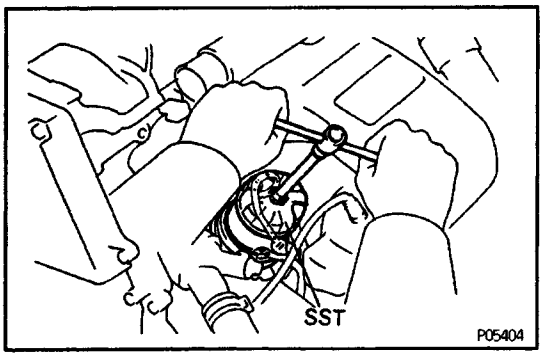

9. REMOVE OIL FILTER

Using SST, remove the oil filter.
SST 09228–06500

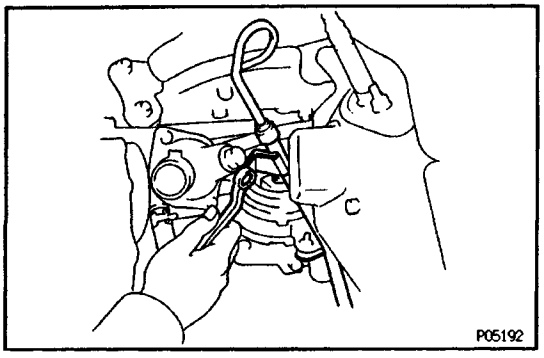

10. DISCONNECT OIL DIPSTICK GUIDE FROM OIL COOLER

Remove the bolt, and disconnect the dipstick guide from the water inlet.

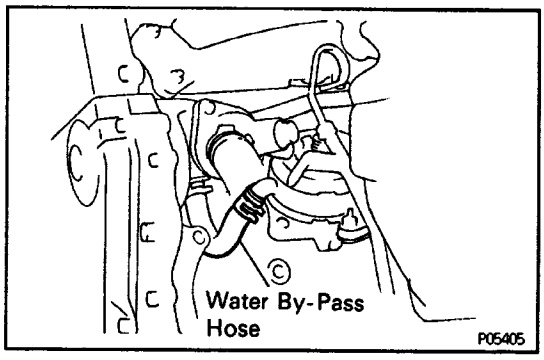

11. REMOVE OIL COOLER

(a) Disconnect the water by–pass hose from oil cooler.

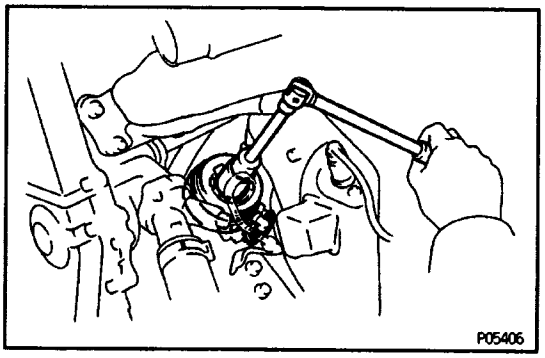

(b) Remove the relief valve and plate washer.
(c) Remove the two nuts and oil cooler.
(d) Remove the O–ring and gasket from the oil cooler.

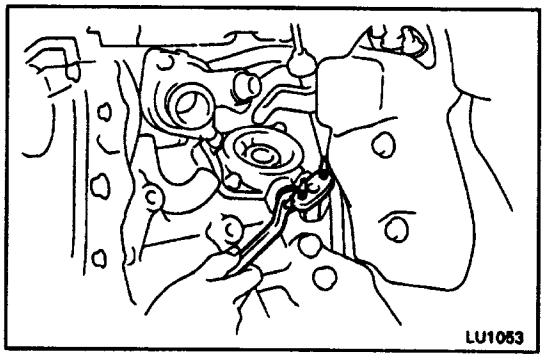

(e) Remove the bolt, and disconnect the water by–pass pipe from the oil cooler bracket.

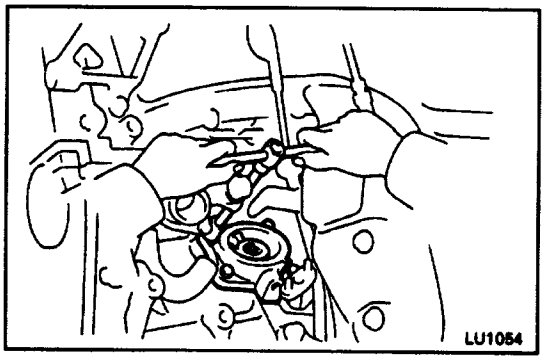

12. REMOVE OIL COOLER BRACKET

(a) Remove the relief valve and plate washer.
(b) Remove the four bolts and oil cooler bracket.
(c) Remove the two 0– rings from the oil cooler bracket.

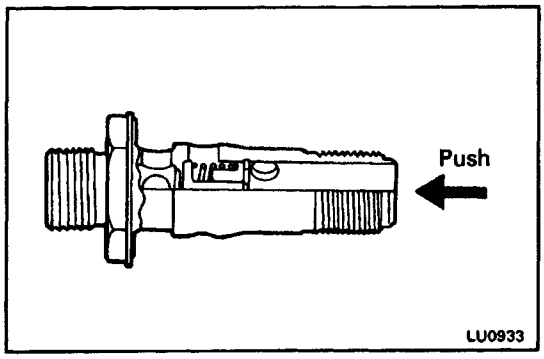

OIL COOLER INSPECTION

1. INSPECT RELIEF VALVE

Push the valve with a wooden stick to check if it is stuck.

If stuck, replace the relief valve.

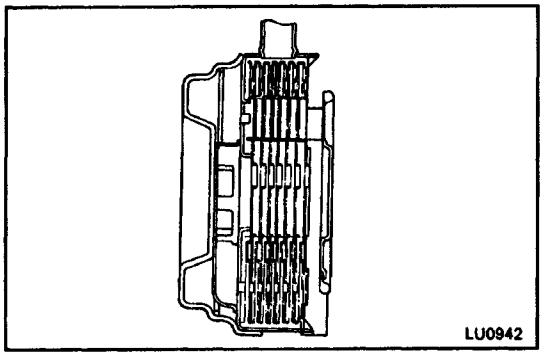

2. INSPECT OIL COOLER

Check the oil cooler for damage or clogging.

If necessary, replace the oil cooler.

OIL COOLER INSTALLATION

(See Components for Removal and Installation)

1: INSTALL OIL COOLER BRACKET

(a) Install two new 0–rings to the oil cooler bracket.

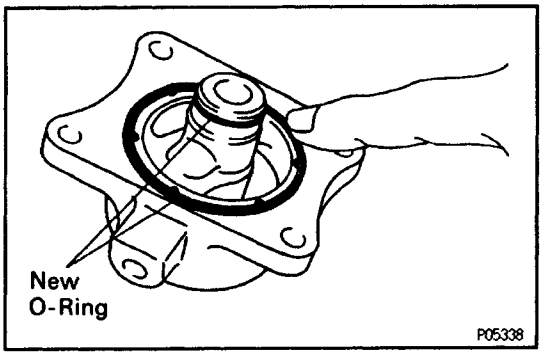

(b) Apply a light coat of engine oil on the small 0– ring.

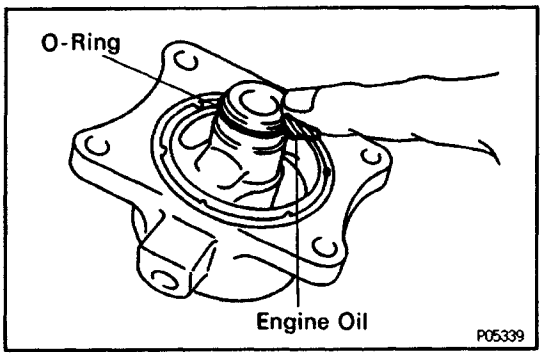

(c) Install the oil cooler bracket with the four bolts.

Torque: 78 N–m (800 kgf–cm, 58 ft–lbf)

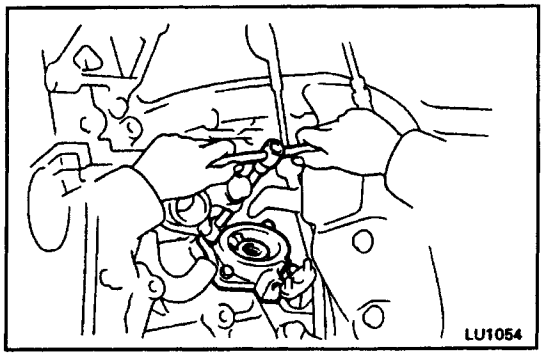

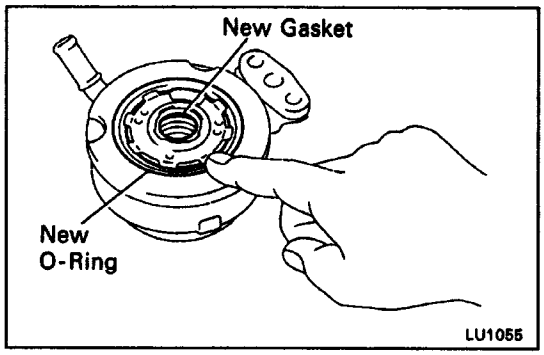

2. INSTALL OIL COOLER

(a) Install new 0–ring and gasket to the oil cooler.

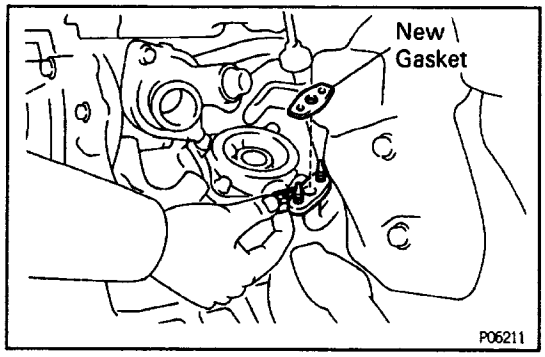

(b) Temporarily install the water by–pass pipe with the bolt.

(c) Place a new gasket on the water by–pass pipe.

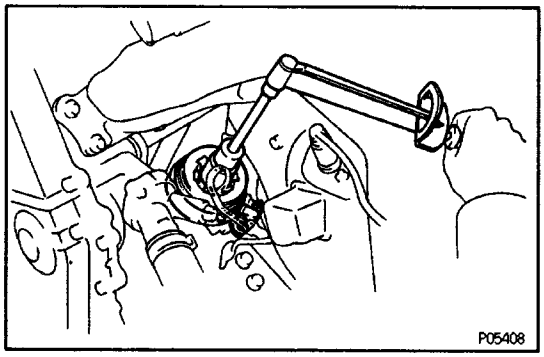

(d) Temporarily install the oil cooler with the two nuts.

(e) Apply a light coat of engine oil on the threads and under the head of the relief valve.

(f) Install the plate washer and relief valve.

Torque: 78 N–m (800 kgf–cm, 58 ft–lbf)

(g) Tighten the two nuts.

Torque: 7.8 N–m (80 kgf–cm, 69 in.–lbf)

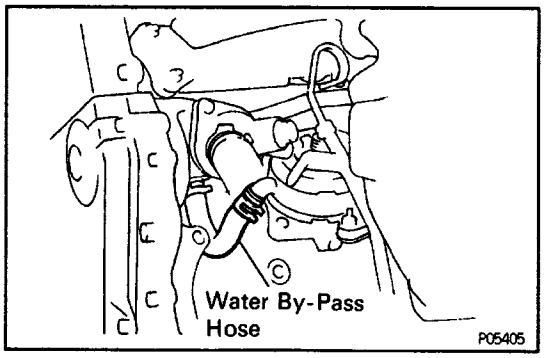

(h) Connect the water by–pass hose to the oil cooler.

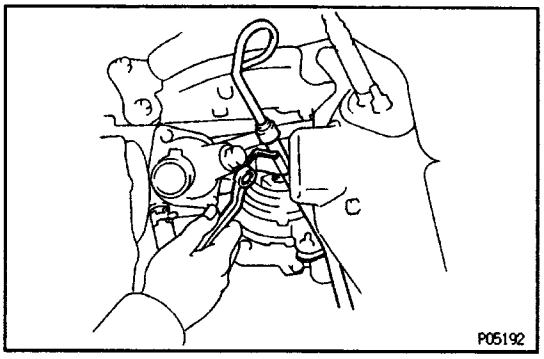

3. INSTALL OIL DIPSTICK GUIDE TO WATER INLET

Install the dipstick guide with the bolt.

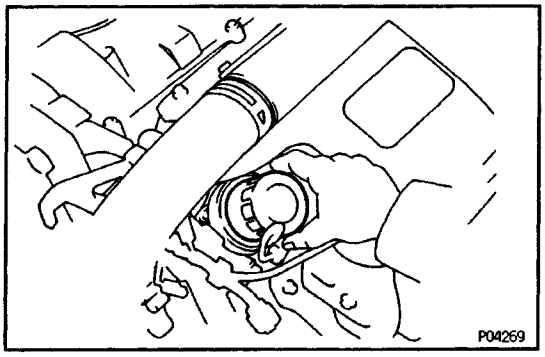

4. INSTALL OIL FILTER

(See Replacement of Oil and Oil Filter)

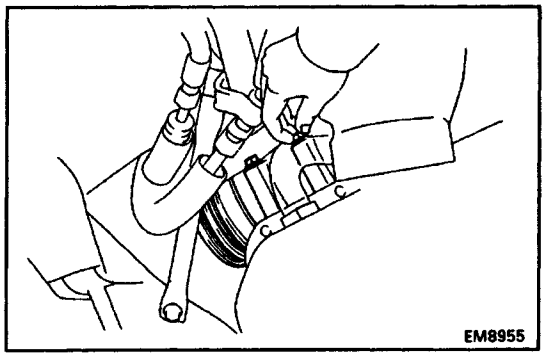

5. INSTALL A/C COMPRESSOR

(a) Temporarily install the A/C compressor with the two bolts.

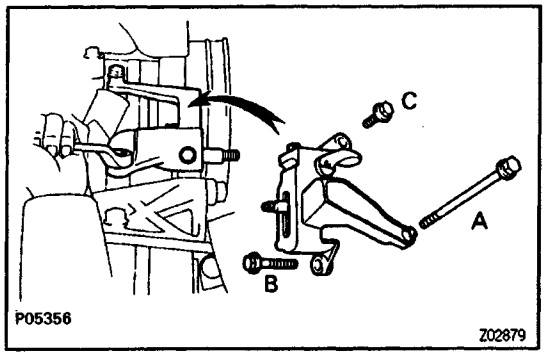

(b) Install the idler pulley bracket with the three bolts.

Torque:

25 N–m (250 kgf–cm, 18 ft–lbf) for A

27 N–m (275 kgf–cm, 20 ft–lbf) for B

37 N–m (375 kgf–cm. 27 ft–lbf) for C

(c) Connect the A/C compressor connector.

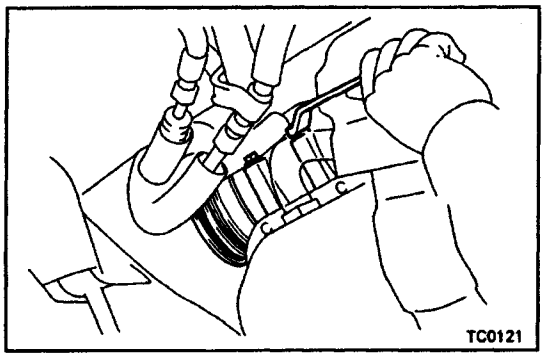

(d) Tighten the two bolts of the lower side of the A/C compressor.

Torque: 25 N–m (250 kgf–cm. 18 ft–lbf)

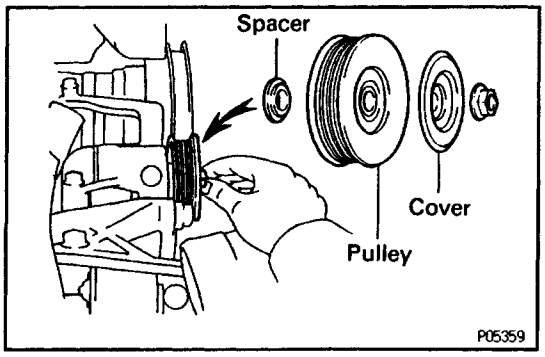

(e) Temporarily install the spacer, pulley and pulley cover with the nut.

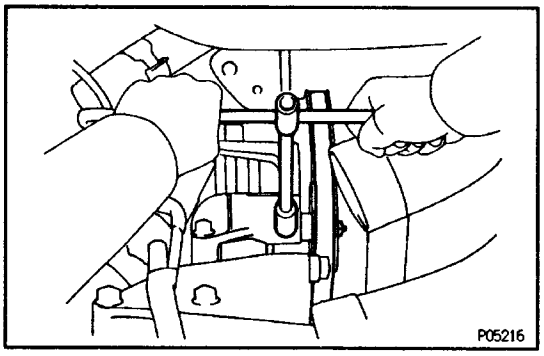

(f) Install the drive belt with the adjusting bolt.
(g) Tighten the idler pulley nut.

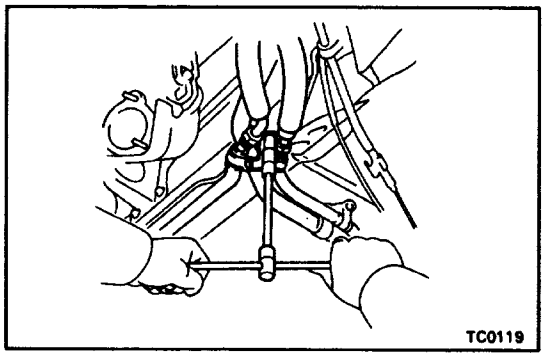

(h) Install the two A/C pipes with the two clamps and nut.

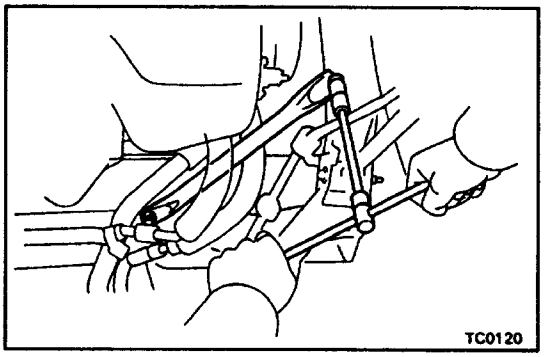

(i) Install the lower suspension brace with the two bolts.
Torque: 73 N–m (740 kgf–cm, 54 ft–lbf)

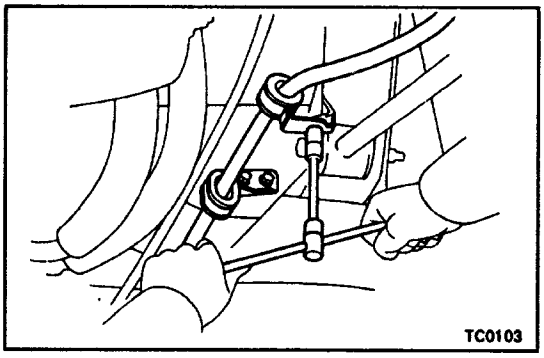

(j) Install the parking brake cable with the two clamp and three bolts.

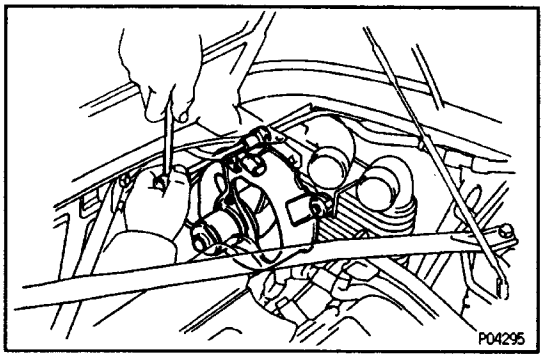

6. INSTALL ENGINE COMPARTMENT ELECTRIC COOLING FAN

(a) Install the cooling fan with the three bolts.
(b) Connect the cooling fan connector.

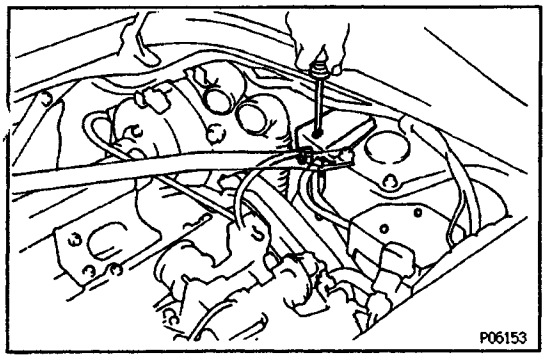

**7. (w/ CRUISE CONTROL SYSTEM)
INSTALL CRUISE CONTROL ACCELERATOR LINKAGE**

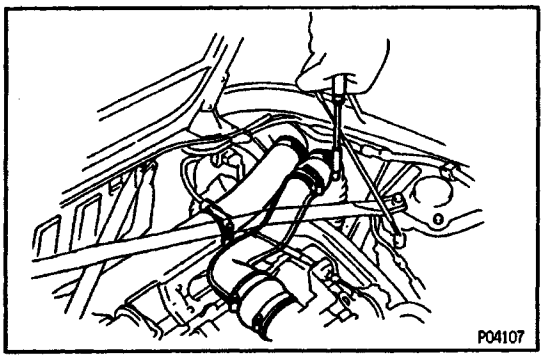

8. INSTALL NO.1 AND NO.2 INTAKE AIR CONNECTORS

9. INSTALL RH ENGINE HOOD SIDE PANEL
10. CONNECT CABLE TO NEGATIVE TERMINAL OF BATTERY
11. FILL WITH ENGINE COOLANT
12. START ENGINE AND CHECK FOR LEAKS
13. CHECK ENGINE OIL LEVEL
14. INSTALL ENGINE UNDER COVERS

OIL NOZZLE

EG084–02

COMPONENTS FOR REMOVAL AND INSTALLATION

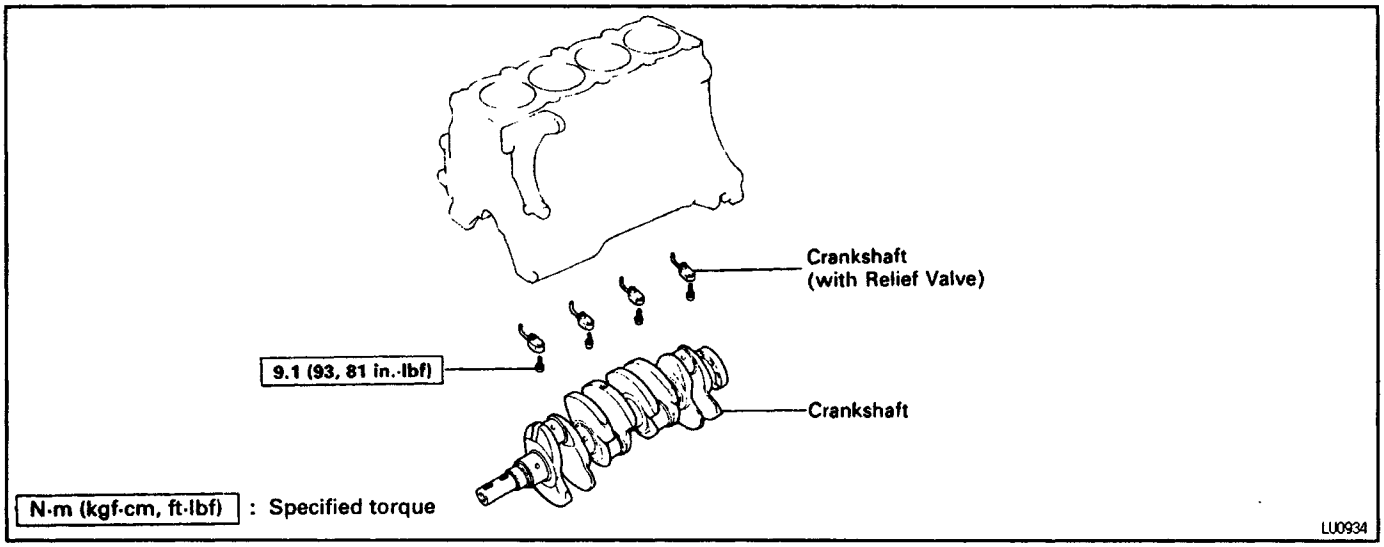

EG106–01

OIL NOZZLES REMOVAL

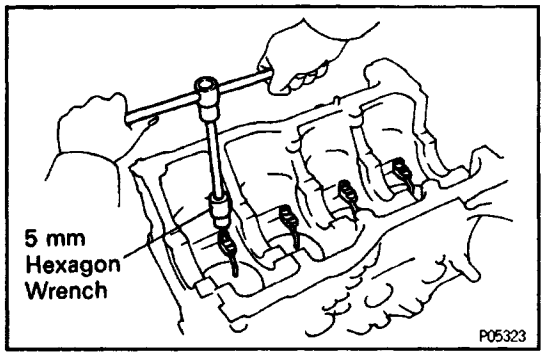

1. REMOVE OIL CRANKSHAFT

(See Cylinder Block under Engine Mechanical)

2. REMOVE OIL NOZZLES

Using a 5 mm hexagon wrench, remove the bolt and oil nozzle. Remove the four nozzles.

EG109–01

OIL NOZZLES INSPECTION

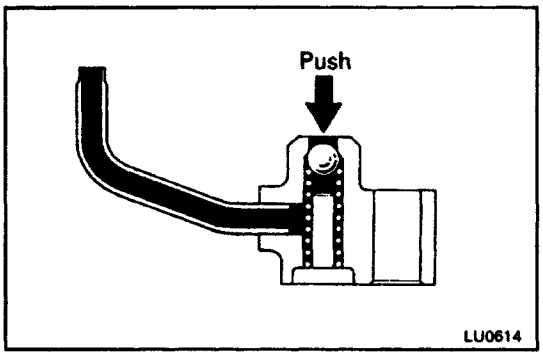

INSPECT RELIEF VALVE

Push the valve with a wooden stick to check if it is stuck.

If stuck, replace the relief valve.

EG10A–01

OIL NOZZLES INSTALLATION

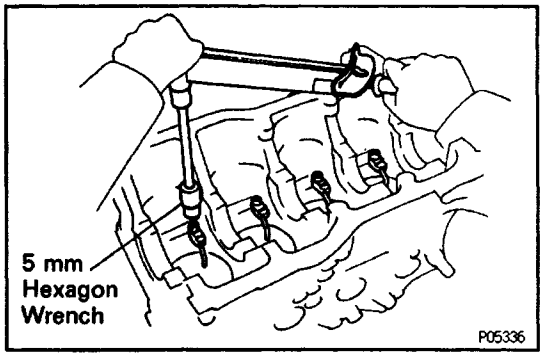

1. INSTALL OIL NOZZLES

Using a 5 mm hexagon wrench, install the oil nozzle with the bolt. Install the four nozzles.

Torque: 9.1 N–m (93 kgf–cm, 81in.–lbf)

2. INSTALL CRANKSHAFT

(See Cylinder Block under Engine Mechanical)

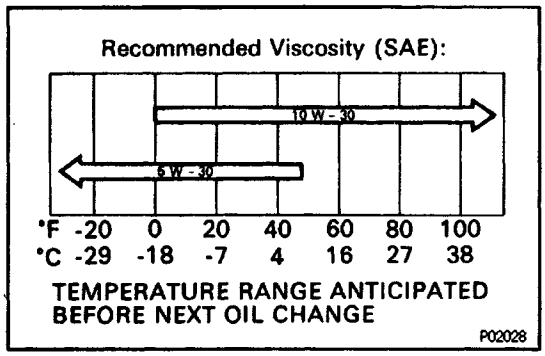

OIL PRESSURE CHECK

1. CHECK ENGINE OIL QUALITY EG16N–01

Check the oil for deterioration, entry of water, disco–oring or thinning.

If the quality is poor, replace the oil.

Oil grade:

API grade SG Energy–Conserving II multigrade engine oil. Recommended viscosity is as shown.

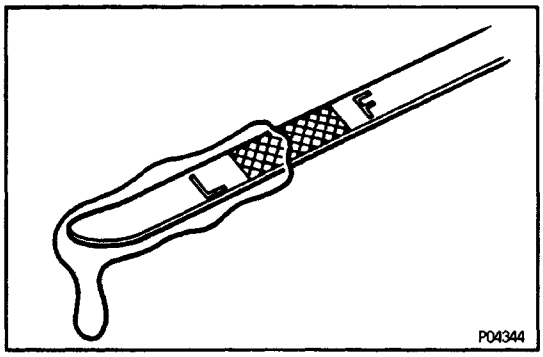

2. CHECK ENGINE OIL LEVEL

The oil level should be between the “L” and ’F’ marks on the dipstick.

If low, check for leakage and add oil up to ”F” mark.

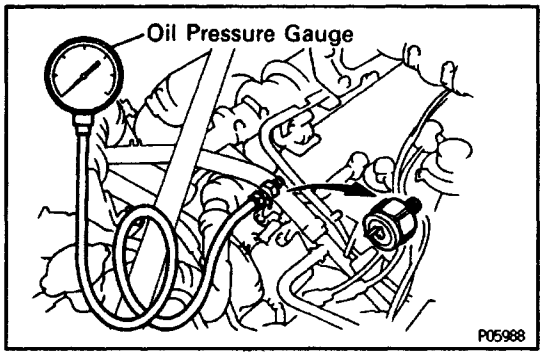

3. REMOVE OIL PRESSURE SWITCH, AND INSTALL OIL PRESSURE GAUGE

4. WARM UP ENGINE

Allow the engine to warm up to normal operating temperature.

5. CHECK OIL PRESSURE

Oil pressure:

At idle

29 kPa (0.3 kgf/cm^2, 4.3 psi) or more

At 3,000 rpm

245 – 490 kPa (2.5 – 5.0 kgf/cm^2, 36 – 71 psi)

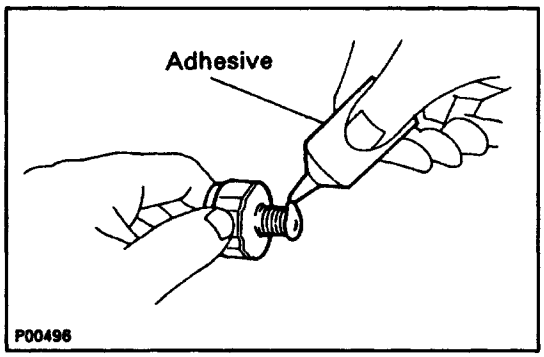

6. REMOVE OIL PRESSURE GAUGE AND REINSTALL OIL PRESSURE SWITCH

(a) Remove the oil pressure gauge.

(b) Apply adhesive to two or three threads of the oil pressure switch.

Adhesive:

Part No. 08833–00080. THREE BOND 1344, LOCTITE 242 or equivalent

(c) Reinstall the oil pressure switch.

7. START ENGINE AND CHECK FOR OIL LEAKS

OIL PUMP

EG10W–01

COMPONENTS FOR REMOVAL AND INSTALLATION

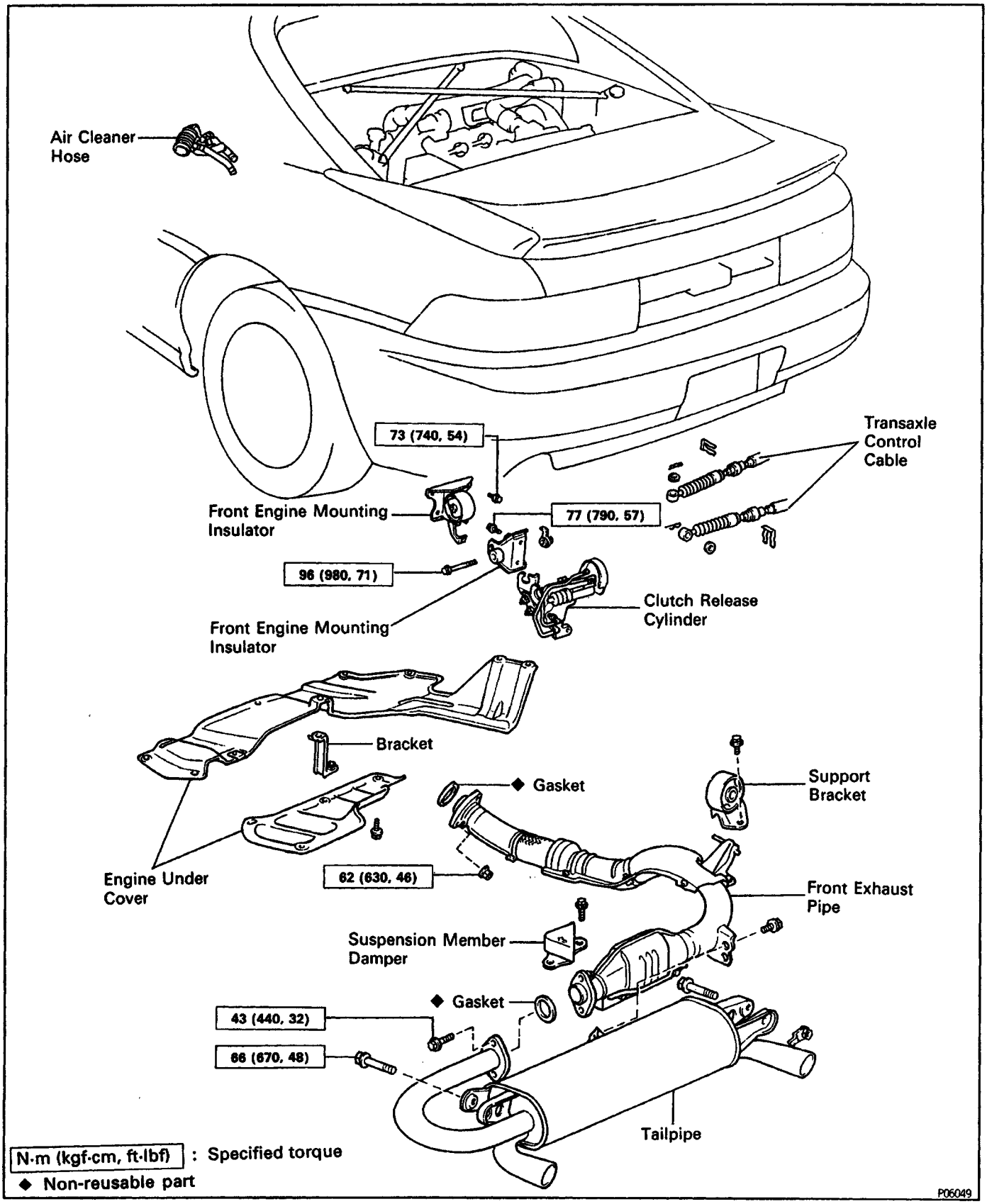

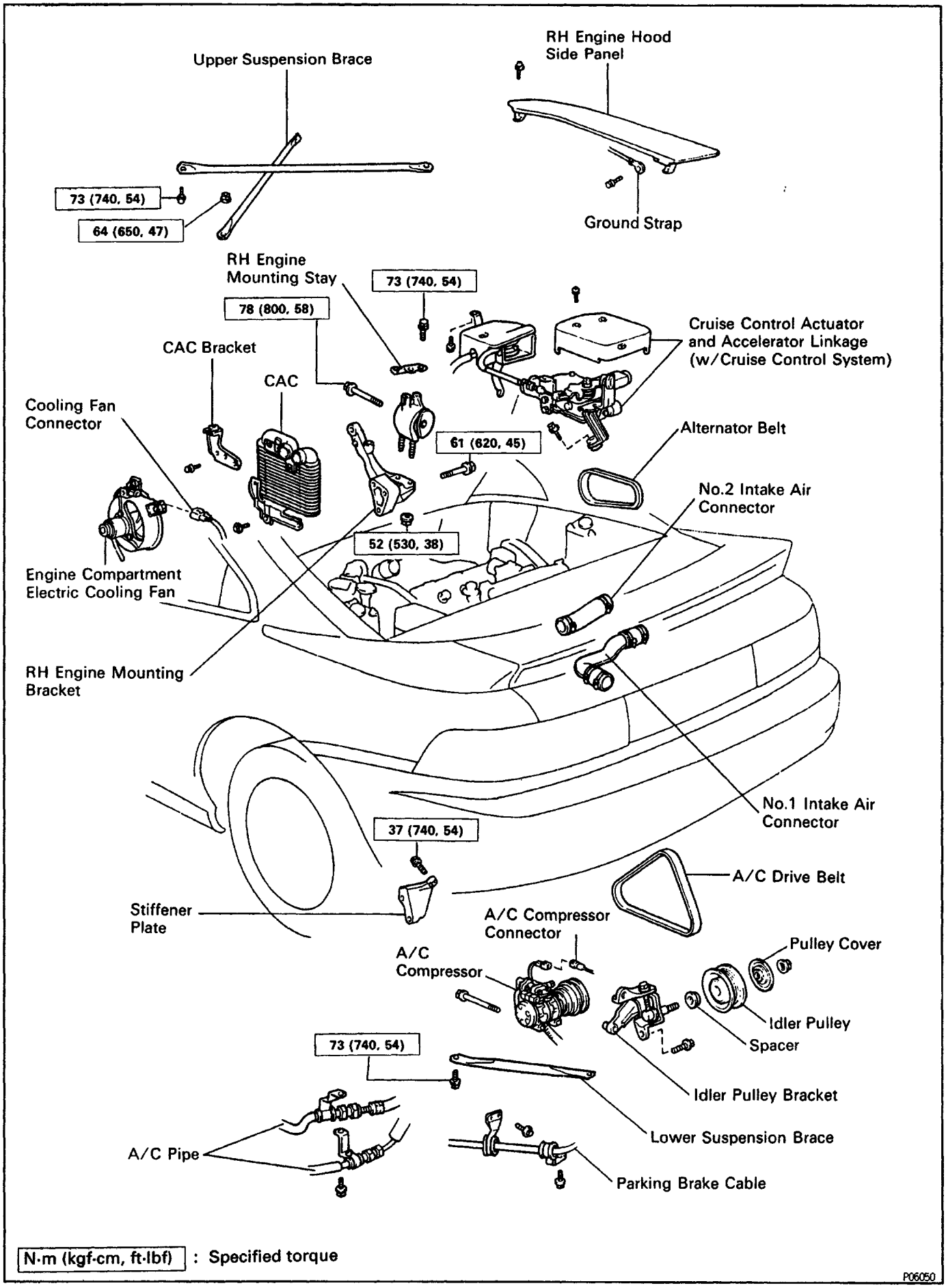
Upper Suspension Brace
RH Engine Hood Side Panel
73 (740, 54)
64 (650, 47)
Ground Strap
RH Engine Mounting Stay
73 (740, 54)
78 (800, 58)
Cruise Control Actuator and Accelerator Linkage (w/Cruise Control System)
CAC Bracket
CAC
Cooling Fan Connector
61 (620, 45)
Alternator Belt
No.2 Intake Air Connector
52 (530, 38)
Engine Compartment Electric Cooling Fan
RH Engine Mounting Bracket
No.1 Intake Air Connector
37 (740, 54)
A/C Drive Belt
Stiffener Plate
A/C Compressor Connector
A/C Compressor
Pulley Cover
Idler Pulley
Spacer
73 (740, 54)
Idler Pulley Bracket
Lower Suspension Brace
A/C Pipe
Parking Brake Cable
N·m (kgf·cm, ft·lbf) : Specified torque
P06050

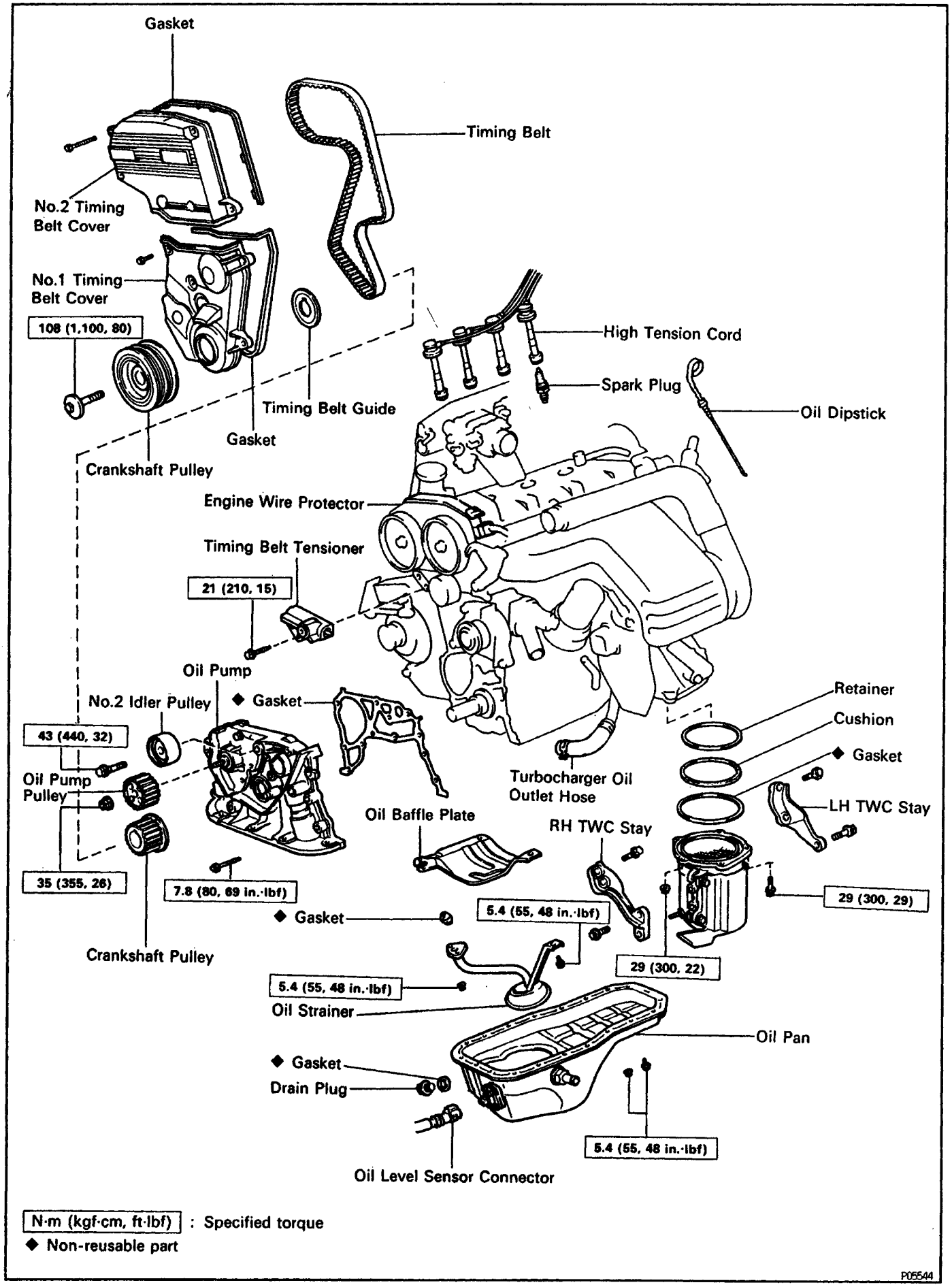
Gasket
Timing Belt
No.2 Timing Belt Cover
No.1 Timing Belt Cover
108 (1,100, 80)
Timing Belt Guide
Gasket
Crankshaft Pulley
High Tension Cord
Spark Plug
Oil Dipstick
Engine Wire Protector
Timing Belt Tensioner
21 (210, 15)
Oil Pump
No.2 Idler Pulley
◆ Gasket
43 (440, 32)
Oil Pump Pulley
35 (355, 26)
7.8 (80, 69 in.·lbf)
Crankshaft Pulley
Oil Baffle Plate
Turbocharger Oil Outlet Hose
Retainer
Cushion
◆ Gasket
LH TWC Stay
RH TWC Stay
29 (300, 29)
◆ Gasket
5.4 (55, 48 in.·lbf)
29 (300, 22)
5.4 (55, 48 in.·lbf)
Oil Strainer
Oil Pan
◆ Gasket
Drain Plug
5.4 (55, 48 in.·lbf)
Oil Level Sensor Connector
N·m (kgf·cm, ft·lbf) : Specified torque
◆ Non-reusable part
P05544

EG10E–01

OIL PUMP REMOVAL

(See Components for Removal and Installation)

HINT: When repairing the oil pump, the oil pan an^ strainer should be removed and cleaned.

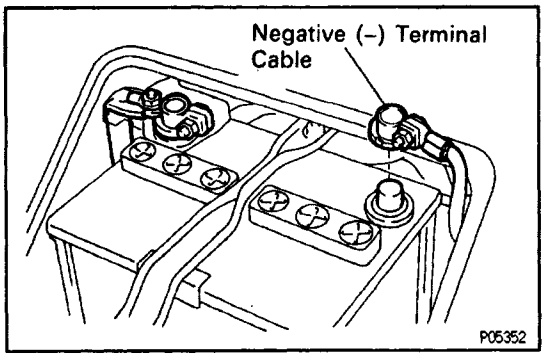

1. DISCONNECT CABLE FROM NEGATIVE TERMINAL OF BATTERY

CAUTION: Turn the ignition switch to "LOCK". Disconnect the negative terminal from the battery. Wait at least 20 seconds before proceeding with work.

2. DRAIN ENGINE OIL

3. REMOVE ENGINE UNDER COVERS

4. REMOVE RH ENGINE HOOD SIDE PANEL

5. REMOVE UPPER SUSPENSION BRACE

Remove the two bolts, two nuts and upper brace.

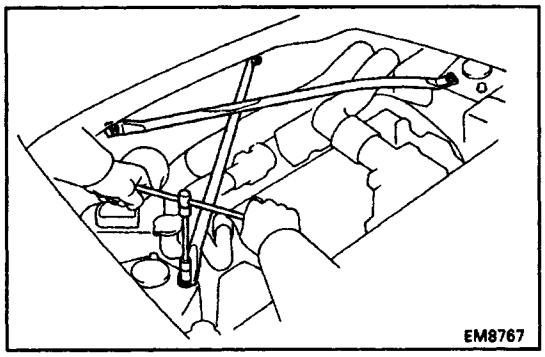

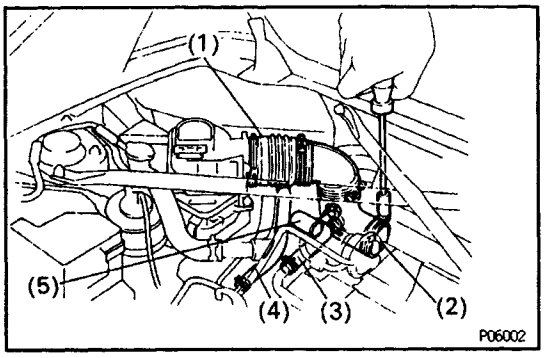

6. REMOVE AIR CLEANER HOSE

Disconnect the following hoses, and remove the air cleaner hose:

(1) Air cleaner hose from air flow sensor
(2) Air cleaner hose from turbocharger
(3) PCV hose from cylinder head cover
(4) Air hose from No.2 air hose
(5) Air hose from air by–pass valve

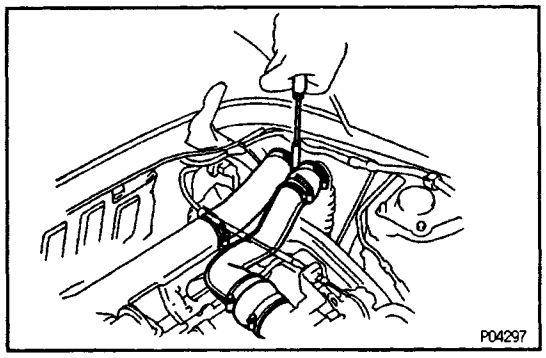

7. REMOVE NO.1 AND NO.2 INTAKE AIR CONNECTORS

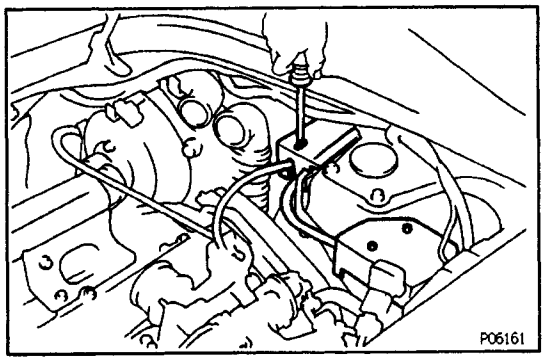

8. (w/ CRUISE CONTROL SYSTEM) REMOVE CRUISE CONTROL ACTUATOR AND ACCELERATOR LINKAGE

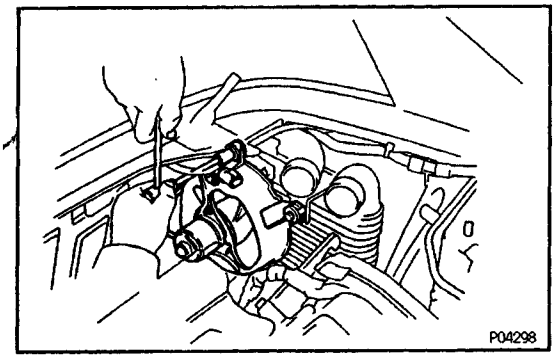

9. REMOVE ENGINE COMPARTMENT ELECTRIC COOLING FAN

(a) Disconnect the cooling fan connector.
(b) Loosen the three bolts, and remove the cooling fan.

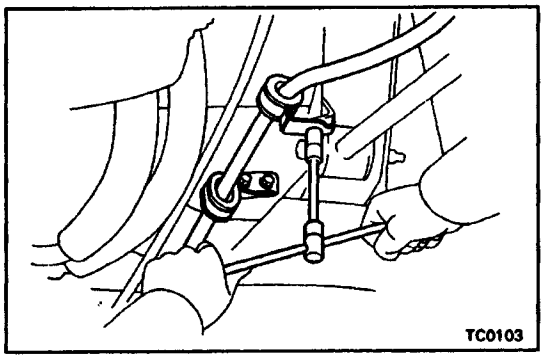

10. DISCONNECT A/C COMPRESSOR FROM ENGINE

(a) Remove the three clamp bolts, and disconnect the parking brake cable.

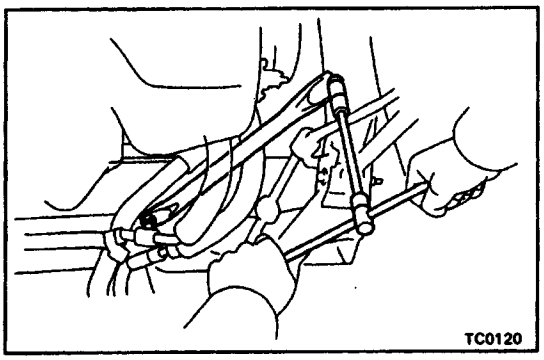

(b) Remove the two bolts and lower suspension brace.

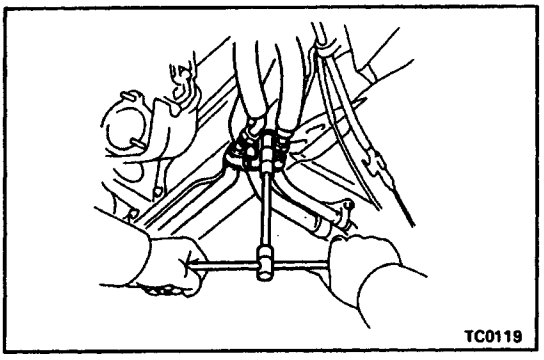

(c) Remove the clamp nut, and disconnect the two A/C pipes.

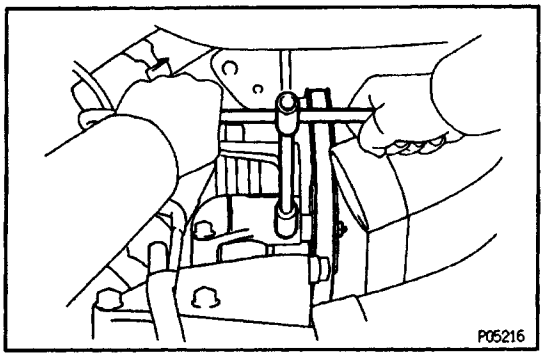

(d) Loosen the idler pulley nut.
(e) Loosen the adjusting bolt, and remove the drive belt.

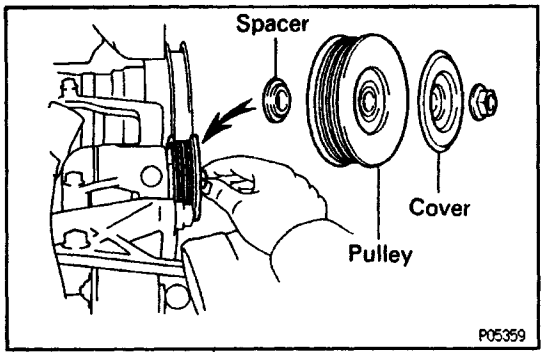

(f) Remove the nut, pulley cover, idler pulley and spacer.

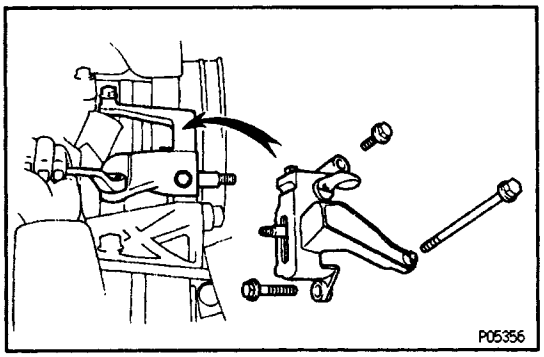

(g) Disconnect the A/C compressor connector.
(h) Remove the three bolts and idler pulley bracket.

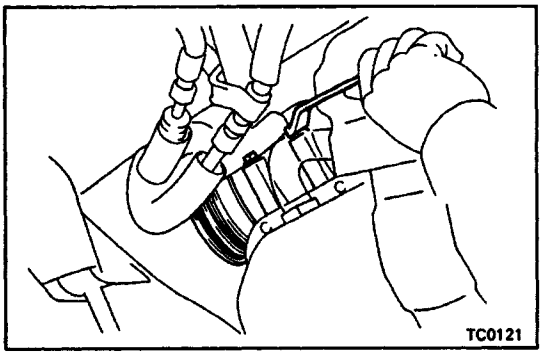

(i) Remove the two bolts, and disconnect the A/C compressor from the engine.

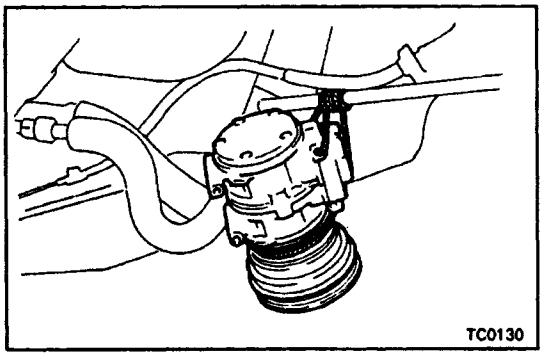

HINT: Suspend the A/C compressor to strut rod with a string.

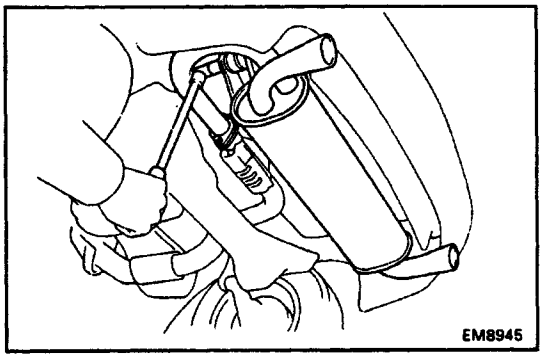

11. REMOVE TAILPIPE

(a) Remove the two bolts holding the front exhaust pipe to the tailpipe bracket.
(b) Remove the two bolts holding the front exhaust pipe to the tailpipe.
(c) Remove the two bolts, tailpipe and gasket.

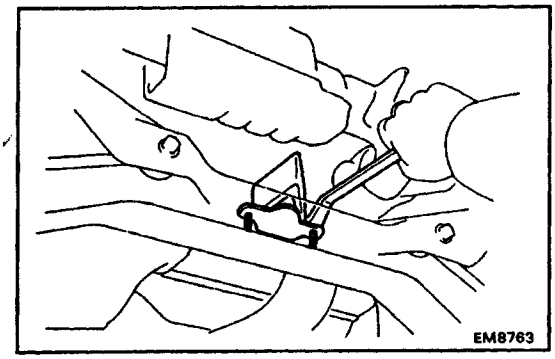

12. REMOVE FRONT EXHAUST PIPE

(a) Remove the two bolts and damper.

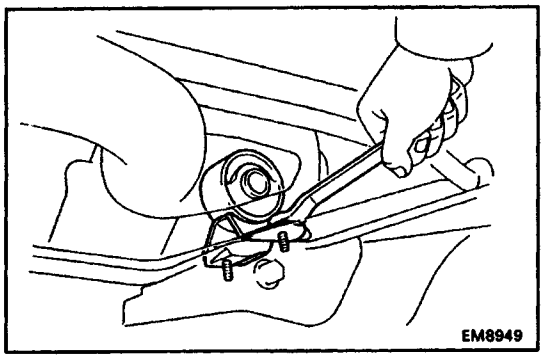

(b) Remove the two bolts and support bracket.

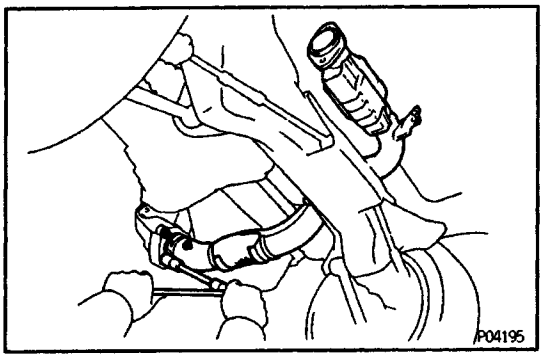

(c) Using a 14 mm deep socket wrench, remove the three nuts.

(d) Remove the front exhaust pipe and gasket.

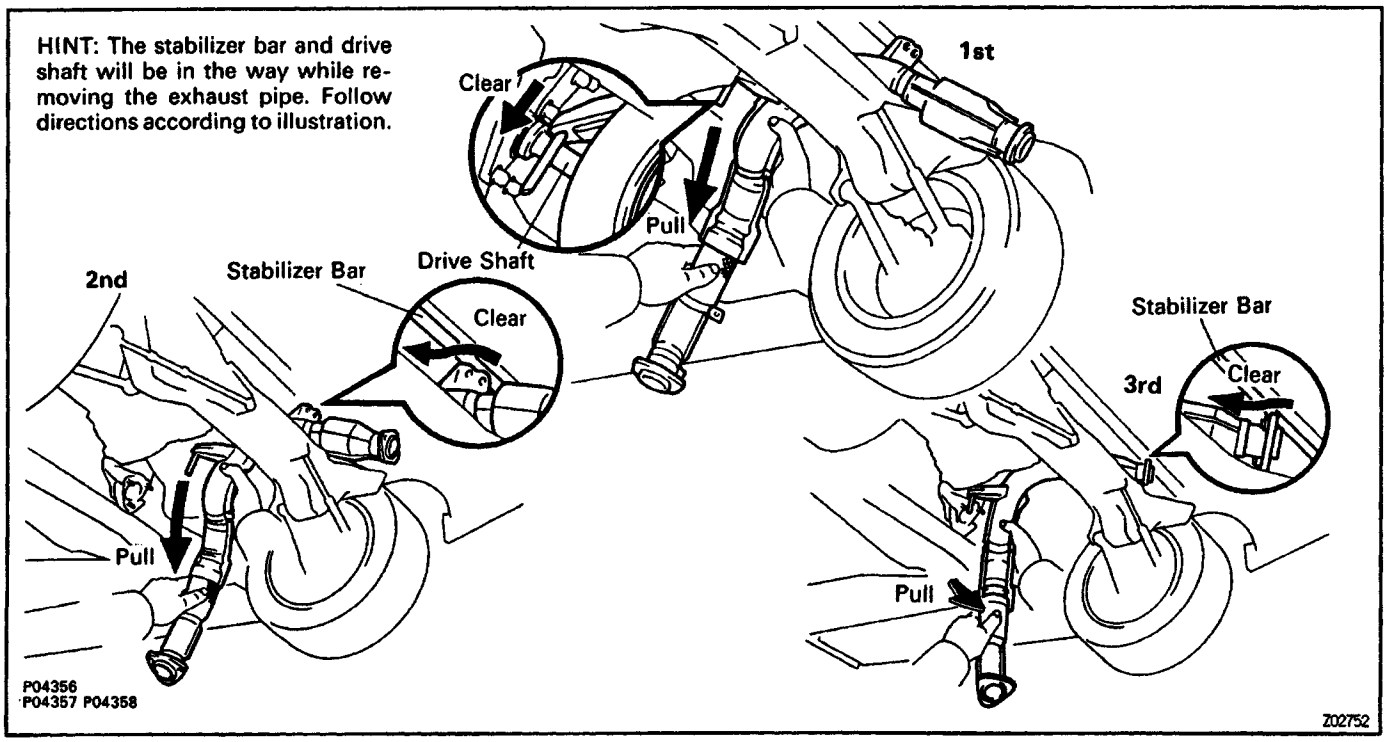

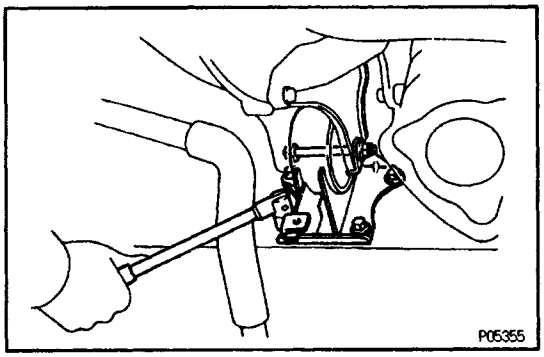

13. REMOVE FRONT ENGINE MOUNTING INSULATOR

(a) Remove the through bolt and nut holding the mount–ing insulator to the mounting bracket.

(b) Remove the four bolts and mounting insulator.

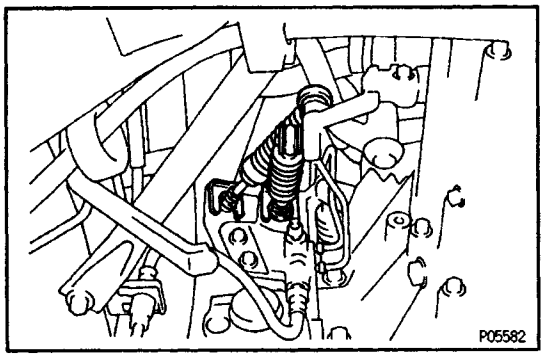

14. REMOVE FRONT ENGINE MOUNTING BRACKET AND CLUTCH RELEASE CYLINDER

(a) Disconnect the two transaxle control cables from the transaxle.

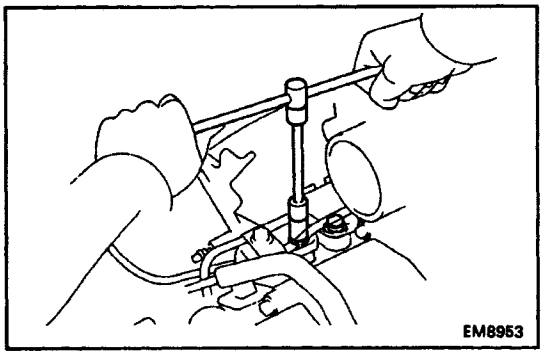

(b) Remove the two bolts holding the clutch release cyl–inder to the transaxle.

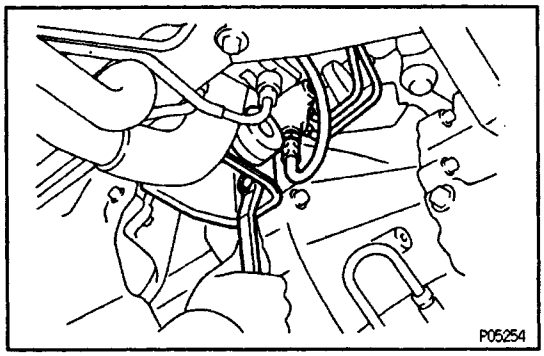

(c) Remove the two bolts and mounting bracket.

(d) Disconnect the clutch release cylinder from the tra–nsaxle.

Remove the three bolts and stiffener plate.

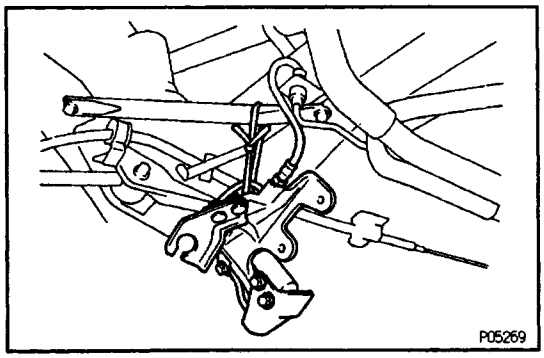

HINT: Suspend the clutch release cylinder to the suspension brace with a string.

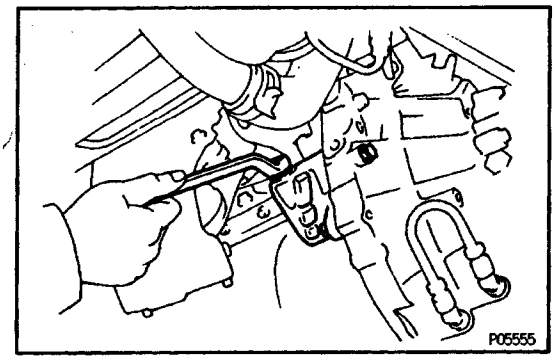

15. REMOVE STIFFENER PLATE

Remove the three bolts and stiffener plate.

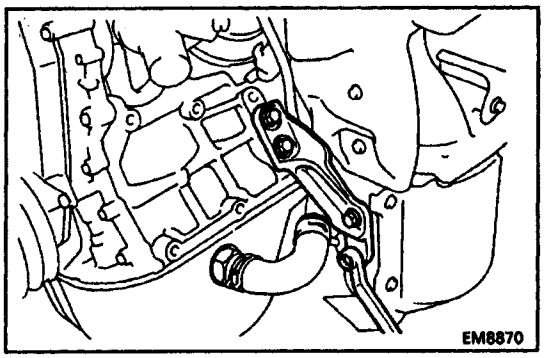

16. REMOVE MAIN TWC

(a) Remove the four bolts and RH TWC stay.

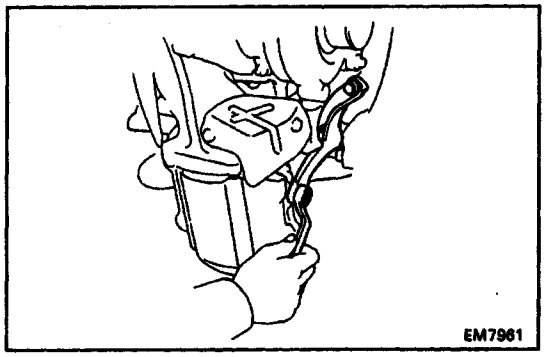

(b) Remove the three bolts and LH TWC stay.

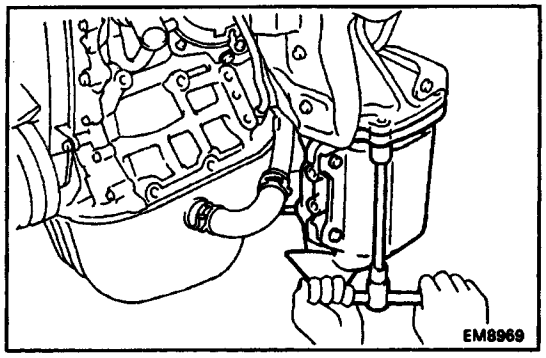

(c) Remove the three bolts, two nuts, TWC, gasket, retainer and cushion.

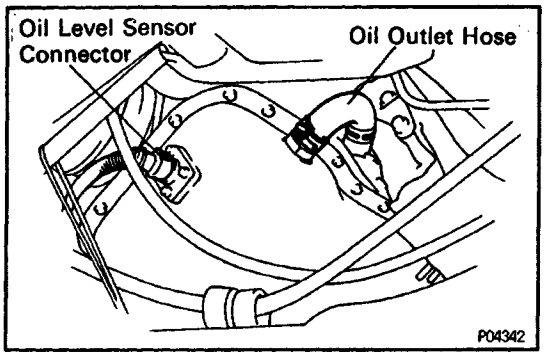

17. REMOVE OIL PAN

(a) Disconnect the oil level sensor connector.

(b) Disconnect the turbocharger oil outlet hose from the oil pan.

(c) Remove the oil dipstick.

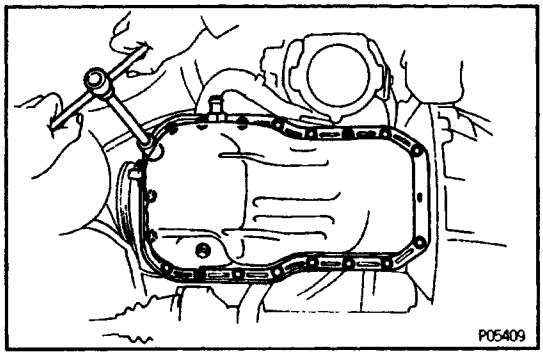

(d) Remove the seventeen bolts and two nuts.

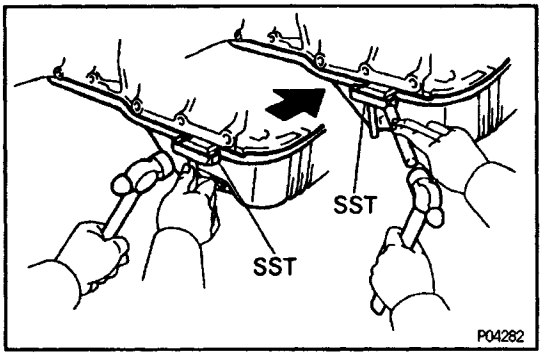

(e) Insert the blade of SST between the cylinder block and oil pan, and cut off applied sealer and remove the oil pan.
SST 09032–00100
NOTICE:

- **Do not use SST for the oil pump body side and rear oil seal retainer.**
- **Be careful not to damage the oil pan flange.**

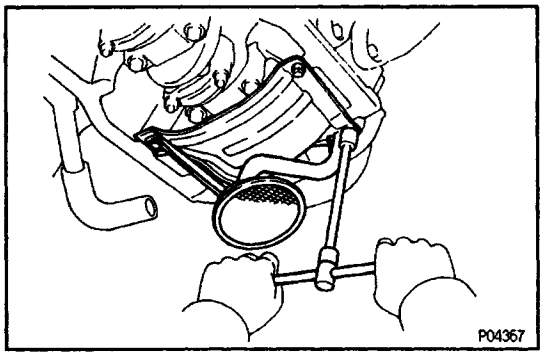

18. REMOVE OIL STRAINER
Remove the two bolts, nuts, oil strainer and gasket.

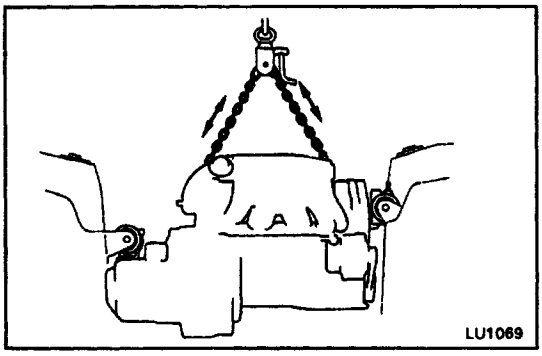

19. SUSPEND ENGINE WITH ENGINE SLING DEVICE

20. REMOVE TIMING BELT
(See steps 11, 12, 14 to 18, 23 to 26, 28 to 29 in Timing belt Removal under Engine Mechanical)

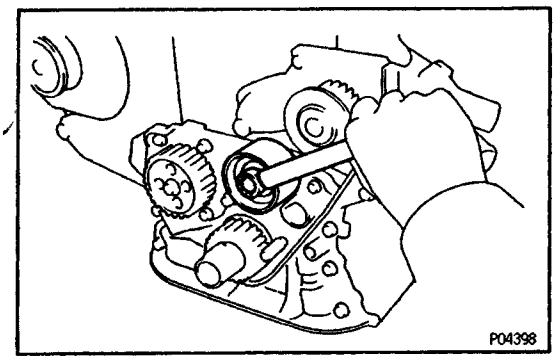

21. REMOVE No.2 IDLER PULLEY

Remove the bolt and pulley.

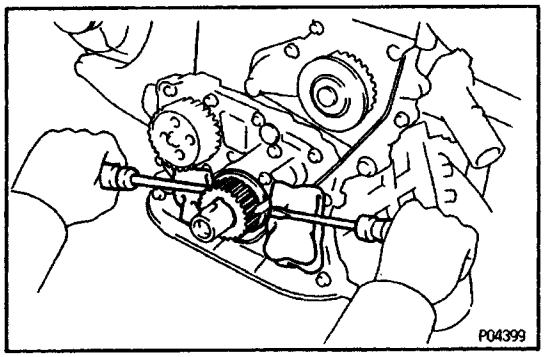

22. REMOVE CRANKSHAFT TIMING PULLEY

If the pulley cannot be removed by hand, use two screwdrivers.

HINT: Position shop rags as shown to prevent damage.

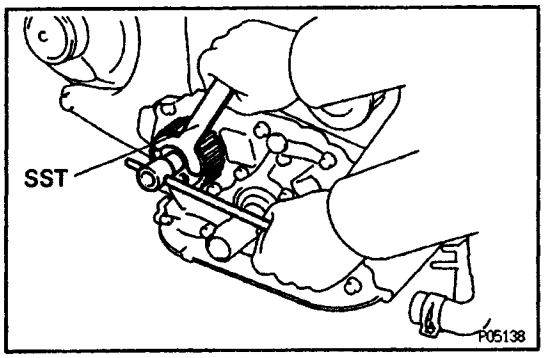

23. REMOVE OIL PUMP PULLEY

Using SST, remove the nut and pulley.

SST 09616–30011

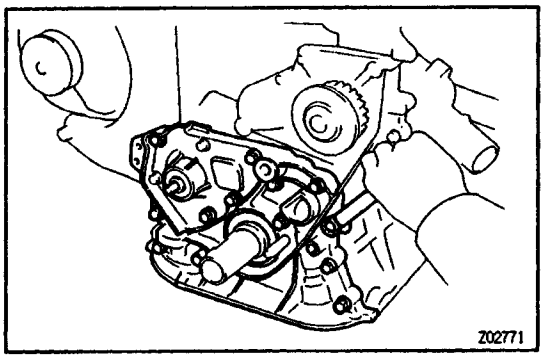

24. REMOVE OIL PUMP

(a) Remove the twelve bolts.

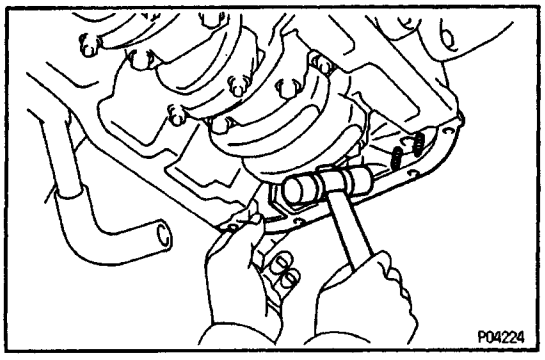

(b) Using a plastic–faced hammer, remove the oil pump by carefully tapping the oil pump body.

(c) Remove the gasket.

COMPONENTS FOR DISASSEMBLY AND ASSEMBLY

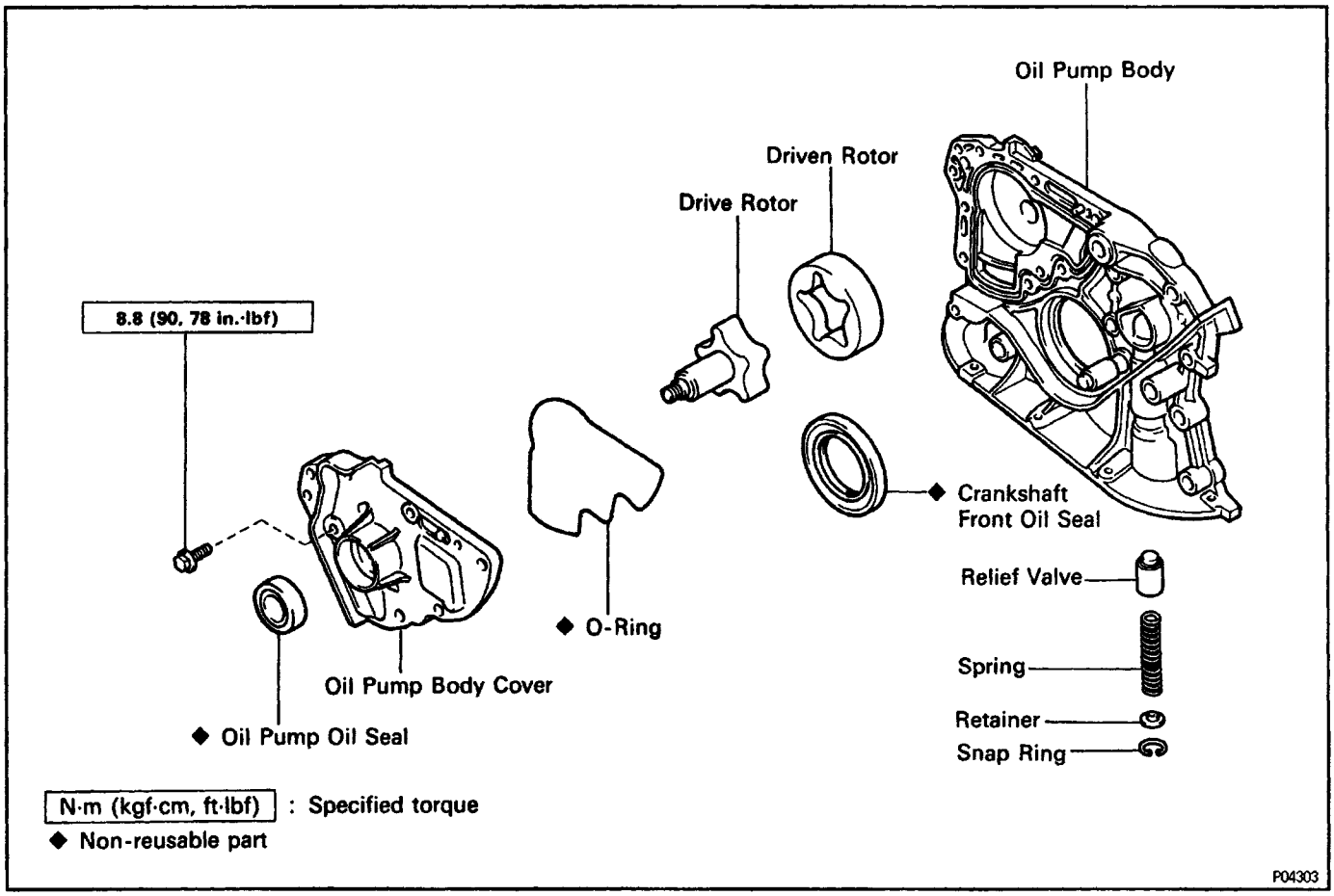

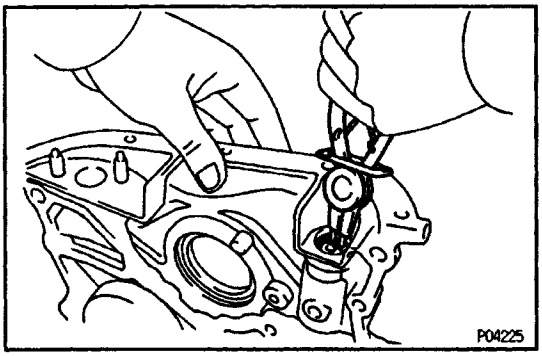

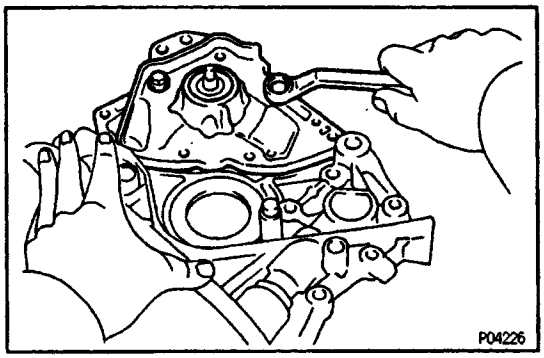

OIL PUMP DISASSEMBLY

SG07Y–02

(See Components for Disassembly and Assembly)

1. REMOVE RELIEF VALVE

(a) Using snap ring pliers, remove the snap ring.

(b) Remove the retainer, spring and relief valve.

2. REMOVE DRIVE AND DRIVEN ROTORS

Remove the two bolts, pump body cover, 4 –ring, the drive and driven rotors.

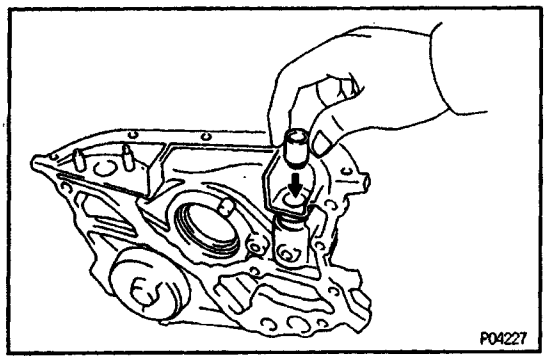

EG07Z–02

OIL PUMP INSPECTION

1. INSPECT RELIEF VALVE

Coat the valve with engine oil and check that it falls smoothly into the valve hole by its own weight.

If it doesn't, replace the relief valve. If necessary, replace the oil pump assembly.

2. INSPECT DRIVE AND DRIVEN ROTORS

A. Inspect rotor body clearance

Using a feeler gauge, measure the clearance between the driven rotor and body.

Standard body clearance:

0.10 – 0.16 mm (0.0039 – 0.0063 in.)

Maximum body clearance:

0.20 mm (0.0079 in.)

If the body clearance is greater than maximum, re–place the rotors as a set. If necessary, replace the oil pump assembly.

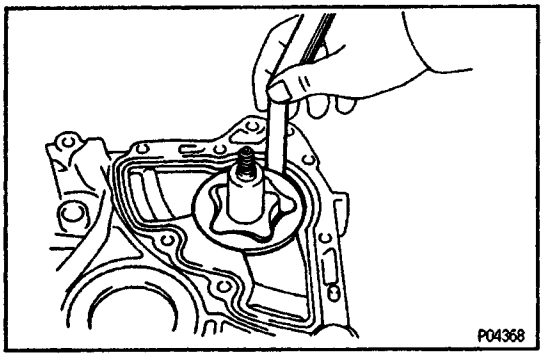

B. Inspect rotor tip clearance

Using a feeler gauge, measure the clearance between the drive and driven rotor tips.

Standard tip clearance:

0.04 – 0.16 mm (0.0016 – 0.0063 in.)

Maximum tip clearance:

0.20 mm (0.0079 in.)

If the tip clearance is greater than maximum, replace the rotors as a set.

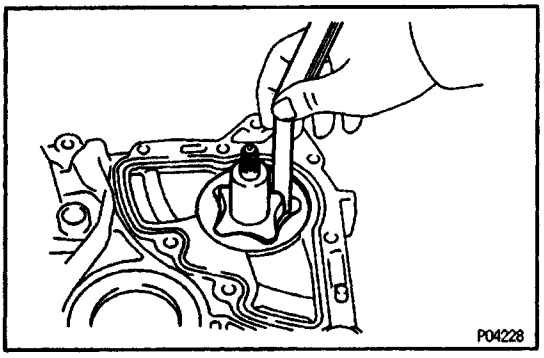

EG080–02

OIL PUMP OIL SEAL REPLACEMENT

1. REMOVE OIL SEAL

Using a screwdriver, pry out the oil seal.

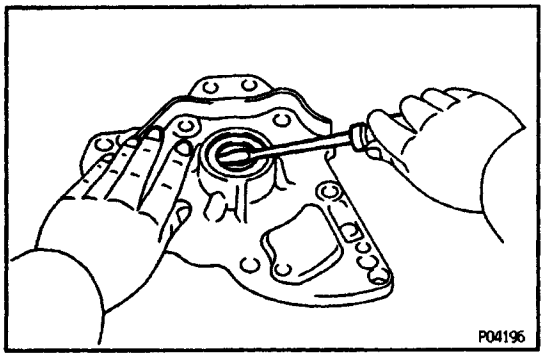

2. INSTALL OIL SEAL

(a) Using SST and a hammer, tap in a new oil seal until its surface is flush with the oil pump cover edge.

SST 09620–30010 (09627–30010, 09631–00020)

(b) Apply MP grease to the oil seal lip.

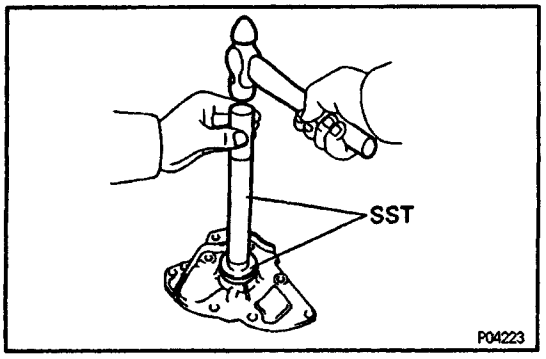

CRANKSHAFT FRONT OIL SEAL REPLACEMENT

HINT: There are two methods (A and B) to replace the oil seal which are as follows:

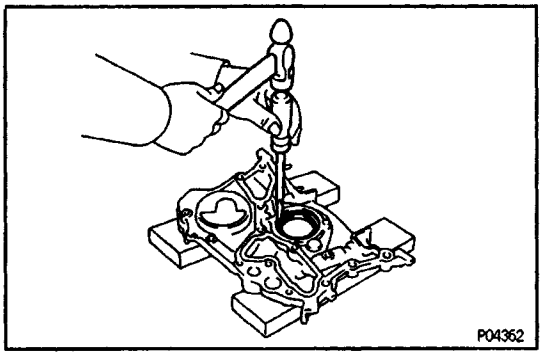

REPLACE CRANKSHAFT FRONT OIL SEAL

A. If oil pump is removed from cylinder block:

(a) Using a screwdriver and hammer, tap out the oil seal.

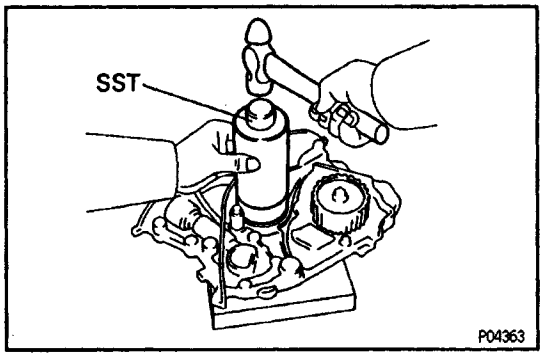

(b) Using SST and a hammer, tap in a new oil seal until its surface is flush with the oil pump body edge.
SST 09226–10010

(c) Apply MP grease to the oil seal lip.

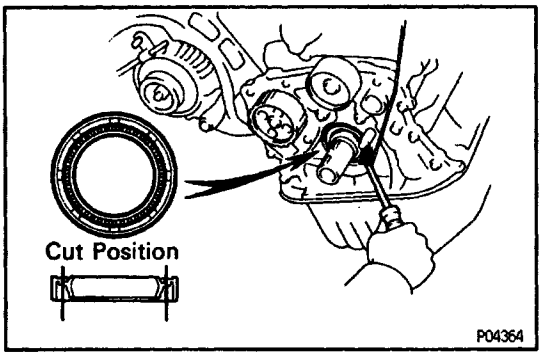

B. If oil pump is installed to the cylinder block:

(a) Using a knife, cut off the oil seal lip.

(b) Using a screwdriver, pry out the oil seat.

NOTICE: Be careful not to damage the crankshaft. Tape the screwdriver tip.

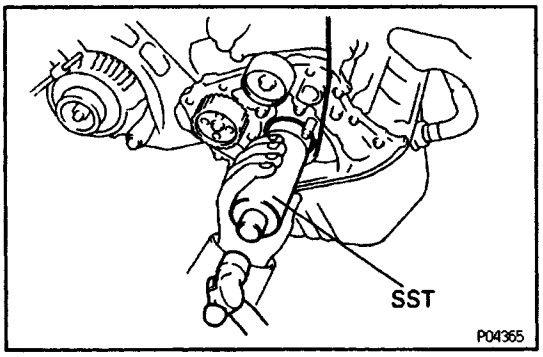

(c) Apply MP grease to a new oil seal lip.

(d) Using SST and a hammer, tap in the oil seal until its surface is flush with the oil pump body edge.
SST 09226–10010

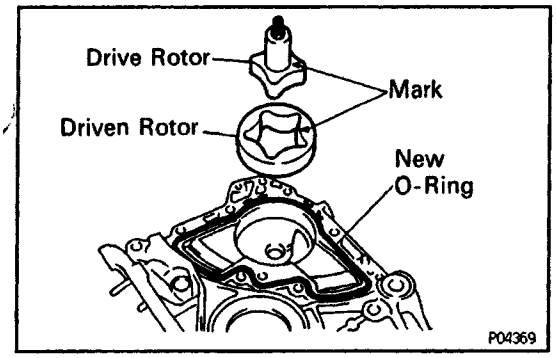

OIL PUMP ASSEMBLY

(See Components for Disassembly and Assembly)

1. INSTALL DRIVE AND DRIVEN ROTORS

(a) Place the drive and driven rotors into pump body with the marks facing the pump body cover side.

(b) Install a new 0–ring to the oil pump body.

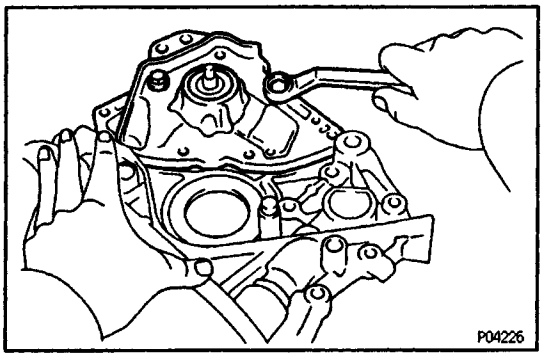

(c) Install the oil pump body cover with the two bolts.

Torque: 8.8 N–m (90 kgf–cm, 78 in.–lbf)

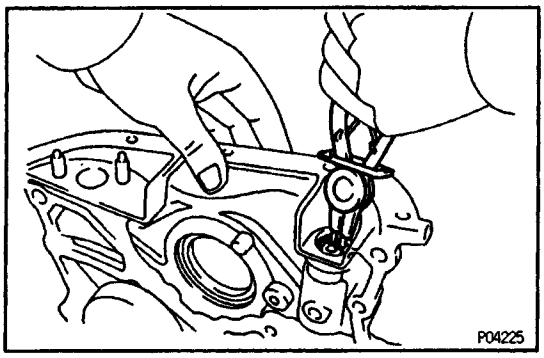

2. INSTALL RELIEF VALVE

(a) Insert the relief valve, spring and retainer into the oil pump body hole. ,

(b) Using snap ring pliers, install the snap ring.

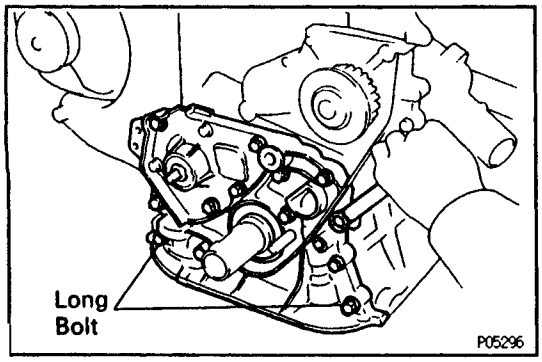

OIL PUMP INSTALLATION

(See Components for Removal and Installation)

1. INSTALL OIL PUMP

Install a new gasket and the oil pump with the twelve bolts.

Torque: 7.8 N–m (80 kgf–cm, 69 in.–lbf)

HINT: Long bolt are indicated in the illustration.

Bolt length:

35 mm (1.38 in.) for long bolt

25 mm (0.98 in.) for other bolts

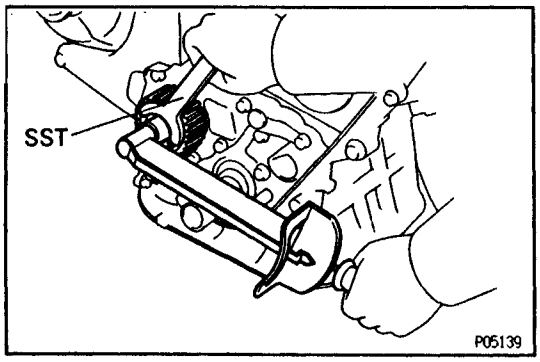

2. INSTALL OIL PUMP PULLEY

(a) Align the cutouts of the pulley and shaft, and slide on the pulley.

(b) Using SST, install the pulley nut.

SST 09616–30011

Torque: 35 N–m (355 kgf–cm, 26 ft–lbf)

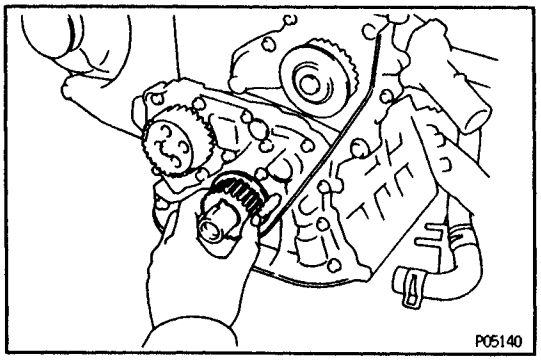

3. INSTALL CRANKSHAFT TIMING PULLEY

(a) Align the timing pulley set key with the key groove of the pulley.

(b) Slide on the timing pulley, facing the flange side inward.

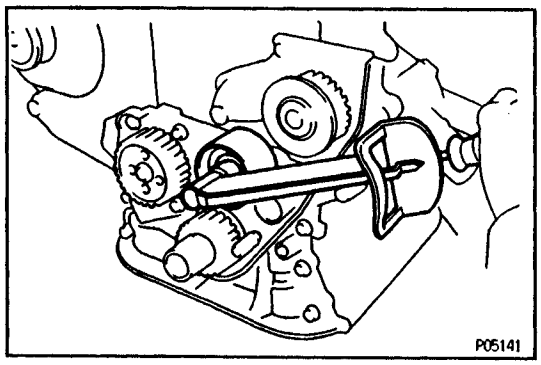

4. INSTALL NO.2 IDLER PULLEY

(a) Install the pulley with the bolt.

Torque: 43 N–m (440 kgf–cm, 32 ft–lbf)

(b) Check that the idler pulley moves smoothly.

5. INSTALL TIMING BELT

(See steps 5 to 8, 10 to 11, 22 to 28 in Timing Belt Installation under Engine Mechanical)

6. REMOVE ENGINE SLING DEVICE

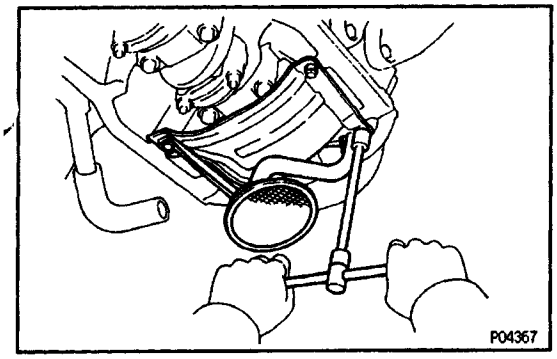

7. INSTALL OIL STRAINER

Install a new gasket and the oil strainer with the two bolts and nuts.

Torque: 5.4 N–m (55 kgf–cm, 48 in.–lbf)

8. INSTALL OIL PAN

(a) Remove any old packing (FIPG) material and be careful not to drop any oil on the contact surfaces of the oil pan and cylinder block.

- Using a razor blade and gasket scraper, remove all the old packing (FIPG) material from the gasket surfaces and sealing groove.
- Thoroughly clean all components to remove all the loose material.
- Using a non–residue solvent, clean both sealing surfaces.

NOTICE: Do not use a solvent which will affect the painted surfaces.

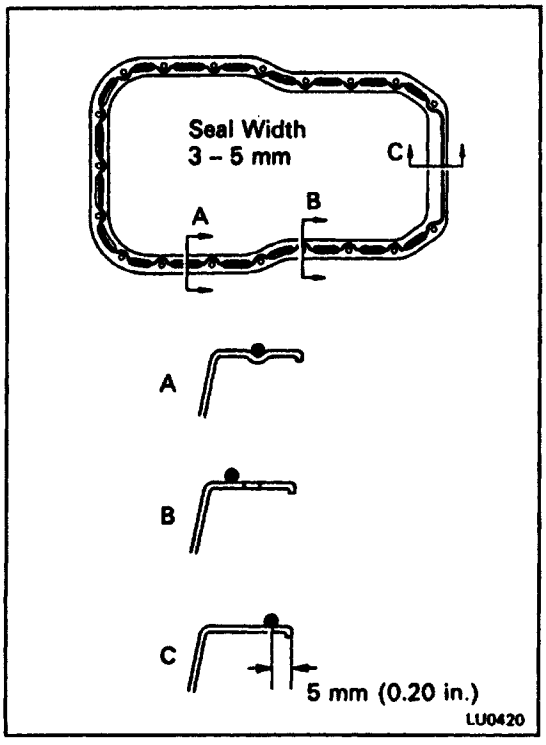

(b) Apply seal packing to the oil pan as shown in the illustration.

Seal packing:

Part No. 08826–00080 or equivalent

- **Install a nozzle that has been cut to a 3 – 5 mm (0.12 – 0.20 in.) opening.**
- **Parts must be assembled within 5 minutes of application. Otherwise the material must be removed and reapplied.**
- **Immediately remove nozzle from the tube and reinstall cap.**

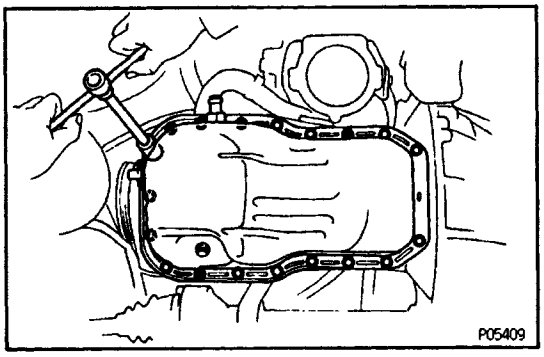

(c) Install the oil pan with seventeen bolts and two nuts.
Torque: 5.4 N–m (55 kgf–cm, 48 in.–lbf)
(d) Install the dipstick.

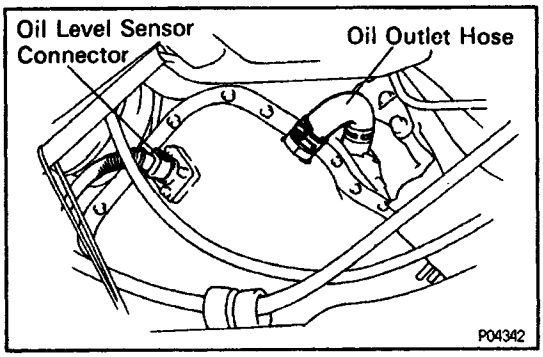

(e) Connect the turbocharger oil outlet hose to the oil pan.
(f) Connect the oil level sensor connector.

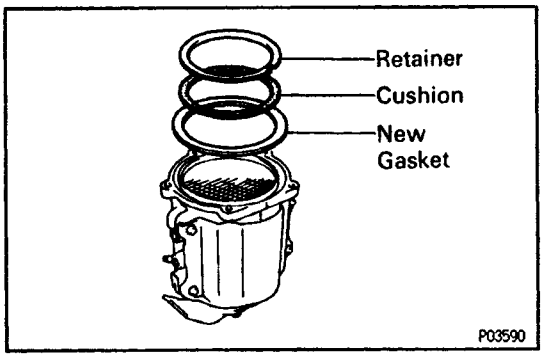

9. INSTALL MAIN TWC
(a) Place the cushion, retainer and a new gasket on the TWC.

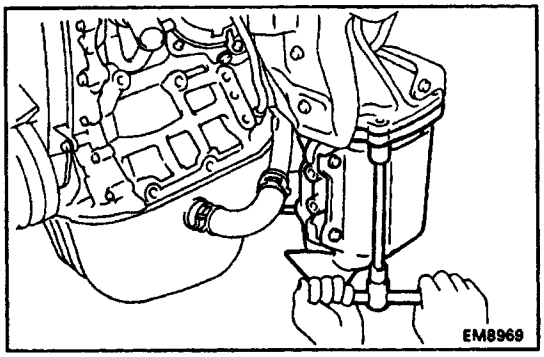

(b) Install the TWC with the three bolts and two nuts.
Torque: 29 N–m (300 kgf–cm, 22 ft–lbf)

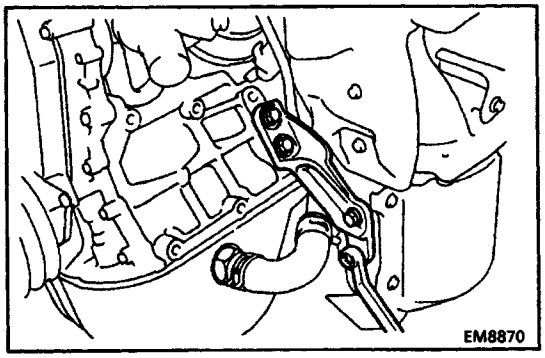

(c) Install the RH TWC stay with the four bolts.
Torque: 59 N–m (600 kgf–cm, 43 ft–lbf)

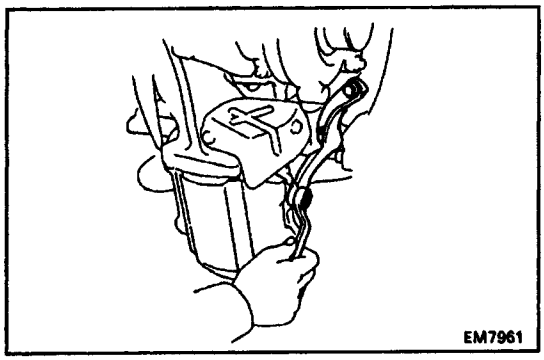

(d) Install the LH TWC stay with the three bolts.
Torque: 59 N–m (600 kgf–cm, 43 ft–lbf)

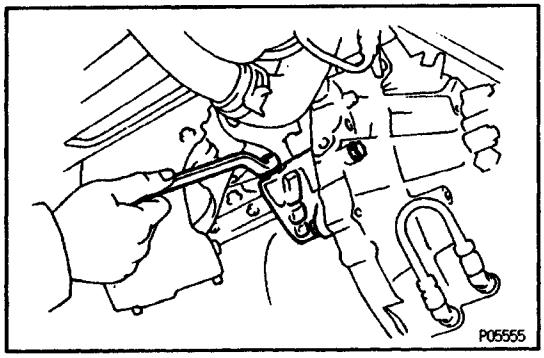

10. INSTALL STIFFENER PLATE

Install the stiffener plate with the three bolts.
Torque: 37 N–m (380 kgf–cm, 27 ft–lbf)

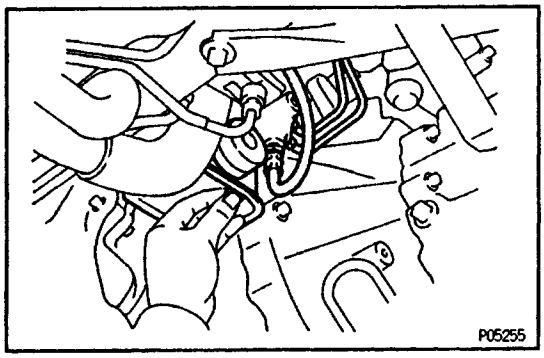

11. INSTALL CLUTCH RELEASE CYLINDER AND FRONT ENGINE MOUNTING BRACKET

(a) Temporarily install the release cylinder and mounting bracket with the two bolts.

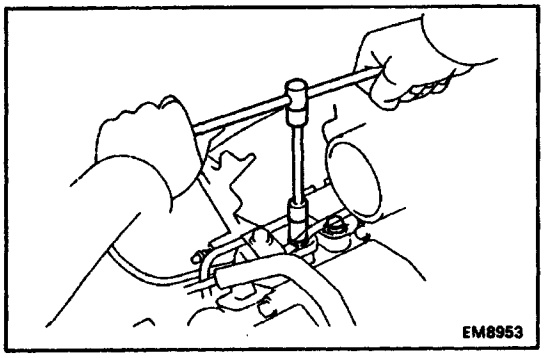

(b) Install the clutch release cylinder with the two bolts.
Torque: 12 N–m (120 kgf–cm. 9 ft–lbf)

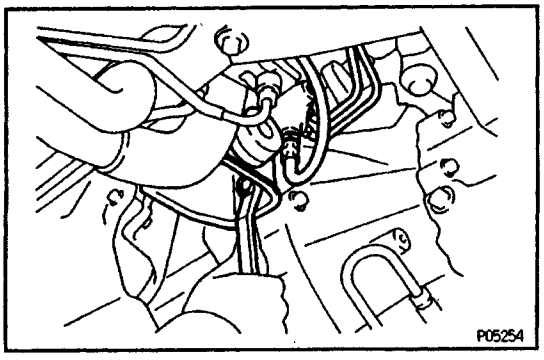

(c) Tighten the two bolts holding the clutch release cyl–inder to the transaxle.
Torque: 77 N–m (790 kgf–cm, 57 ft–lbf)

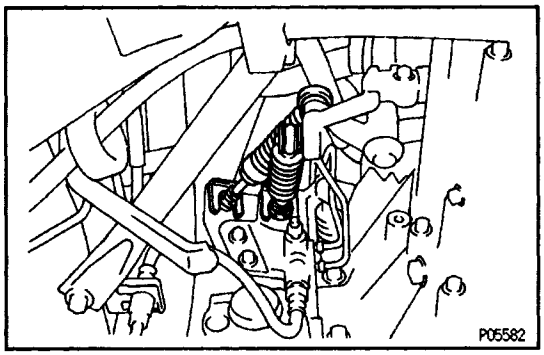

(d) Connect the two transaxle control cables to the transaxle.

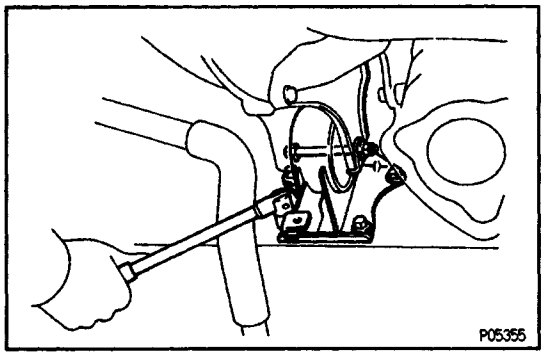

12. INSTALL FRONT ENGINE MOUNTING INSULATOR

(a) Install the mounting insulator to the body with the four bolts.
Torque: 77 N–m (790 kgf–cm, 57 ft–lbf)

(b) Install the mounting insulator to the mounting bracket with the through bolt and nut.
Torque: 96 N–m (980 kgf–cm, 71 ft–lbf)

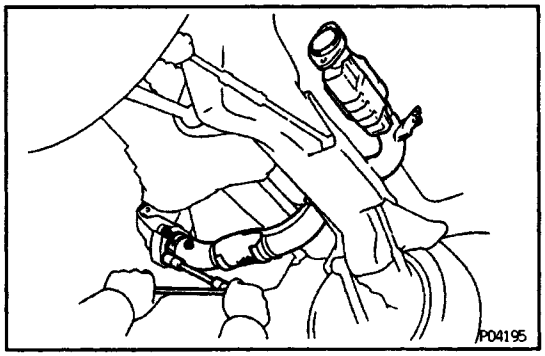

13. INSTALL FRONT EXHAUST PIPE

(a) Place a new gasket to the front of the front exhaust pipe.

(b) Using a 14 mm deep socket wrench, install the front exhaust pipe with three new nuts.
Torque: 62 N–m (630 kgf–cm, 46 ft–lbf)

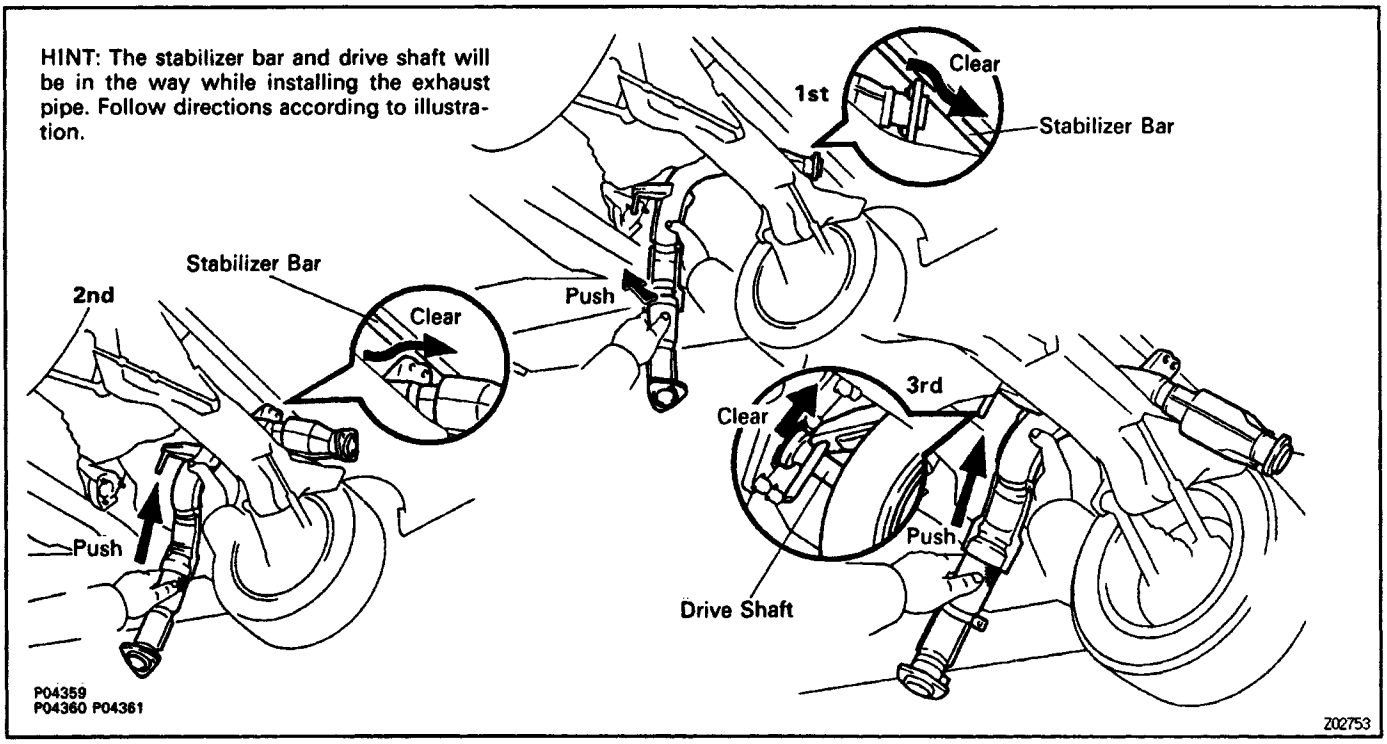

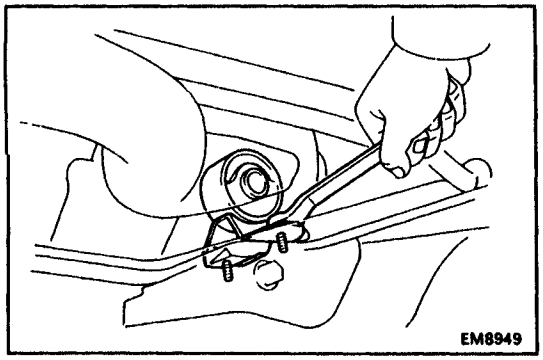

(c) Install the support bracket with the two bolts.
Torque: 21 N–m (210 kgf–cm, 15 ft–lbf)

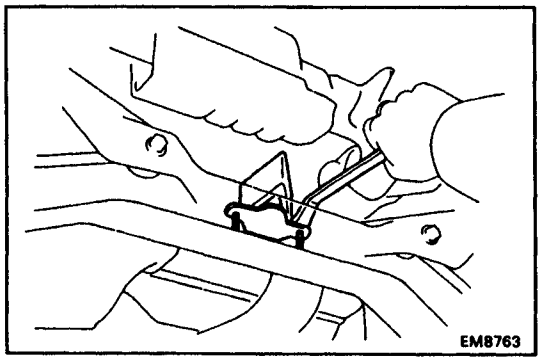

(d) Install the damper with the two bolts.
Torque: 21 N–m (210 kgf–cm, 15 ft–lbf)

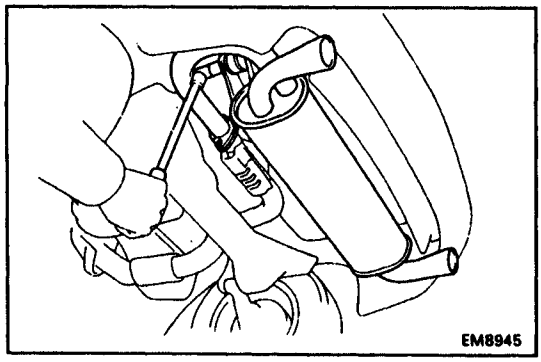

14. INSTALL TAILPIPE

(a) Place a new gasket to the rear of the front exhaust pipe.
(b) Install the tailpipe to the body bracket with the two bolts and nut.
Torque: 66 N–m (670 kgf–cm, 48 ft–lbf)
(c) Install the two bolts holding the front exhaust pipe to the tailpipe.
Torque: 43 N–m (440 kgf–cm, 32 ft–lbf)
(d) Install the two bolts holding the front exhaust pipe bracket to the tailpipe bracket.
Torque: 19 N–m (190 kgf–cm, 14 ft–lbf)

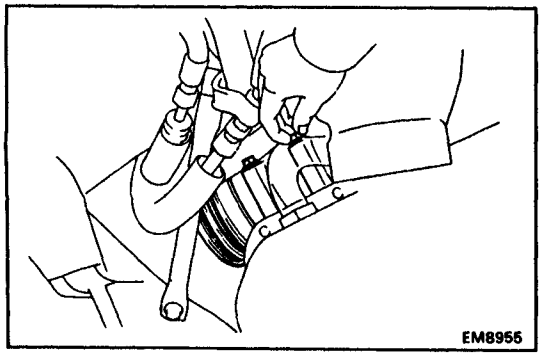

15. INSTALL A/C COMPRESSOR

(a) Temporarily install the A/C compressor with the two bolts.

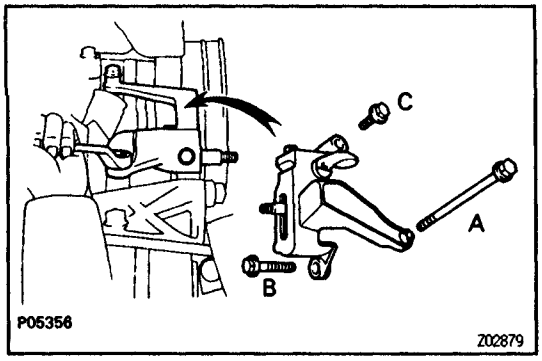

(b) Install the idler pulley bracket with the three bolts.

Torque:

25 N–m (250 kgf–cm, 18 ft–lbf) for A

27 N–m (275 kgf–cm, 20 ft–lbf) for B

37 N–m (375 kgf–cm, 27 ft–lbf) for C

(c) Connect the A/C compressor connector.

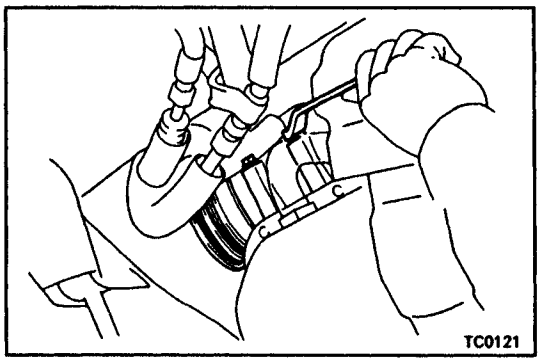

(d) Tighten the two bolts of the lower side of the A/C compressor.

Torque: 25 N–m (250 kgf–cm, 18 ft–lbf)

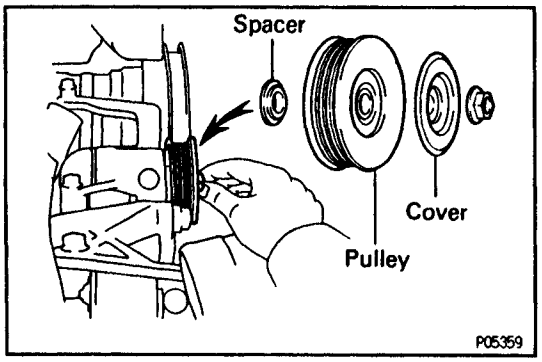

(e) Temporarily install the spacer, pulley and pulley cover with the nut.

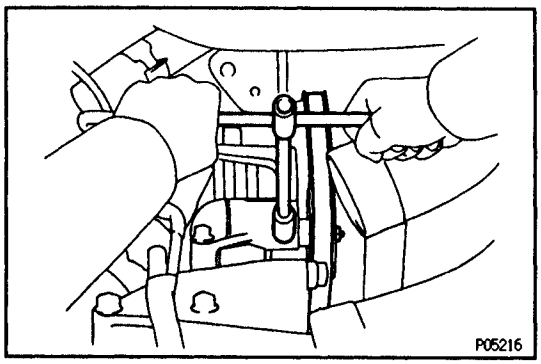

(f) Install the drive belt with the adjusting bolt.

(g) Tighten the idler pulley nut.

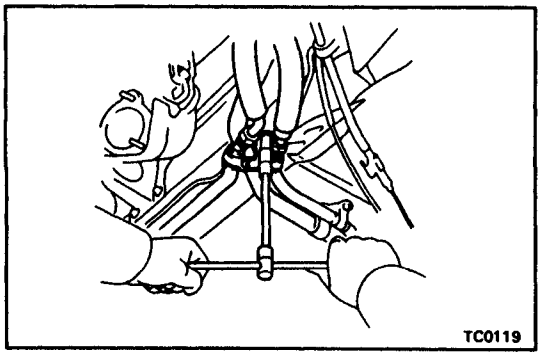

(h) Install the two A/C pipes with the two clamps and nut.

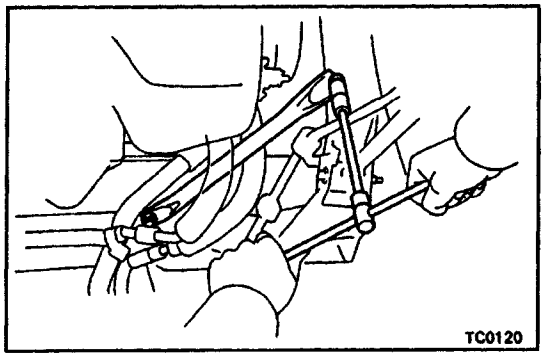

(i) Install the lower suspension brace with the two bolts.
Torque: 73 N–m (740 kgf–cm, 54 ft–lbf)

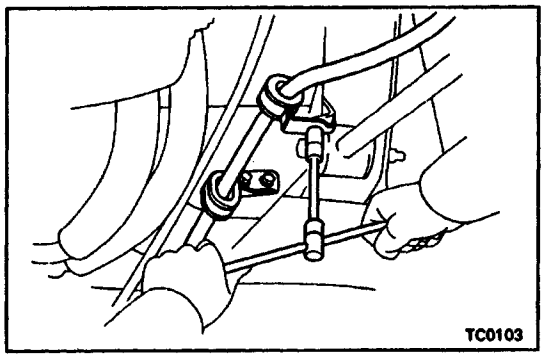

(j) Install the parking brake cable with the two clamps and three bolts.

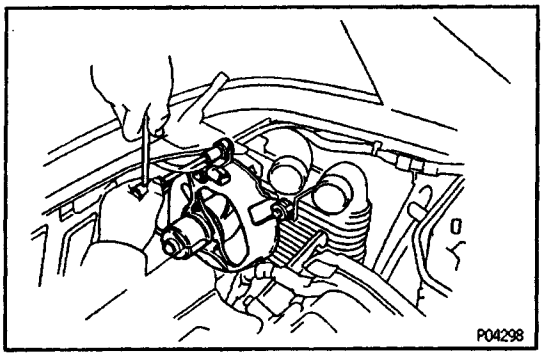

16. INSTALL ENGINE COMPARTMENT ELECTRIC COOLING FAN

(a) Install the cooling fan with the three bolts.
(b) Connect the cooling fan connector.

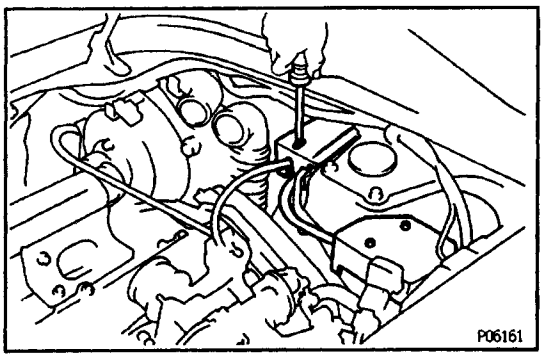

17. (w/ CRUISE CONTROL SYSTEM) INSTALL CRUISE CONTROL ACTUATOR AND ACCELERATOR LINKAGE

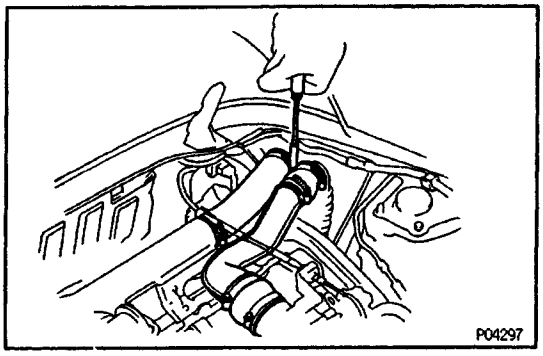

18. INSTALL NO.1 AND NO.2 INTAKE AIR CONNECTORS

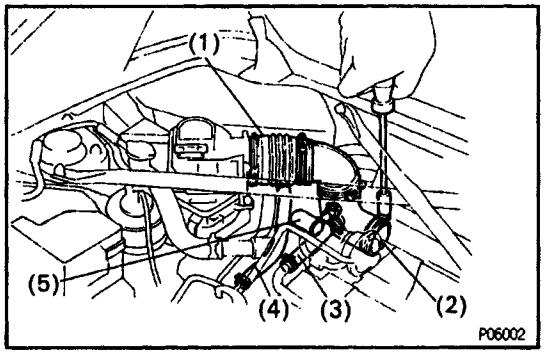

19. INSTALL AIR CLEANER HOSE

Reconnect the following hoses, and install the air cleaner hose:

(1) Air cleaner hose to air flow sensor
(2) Air cleaner hose to turbocharger
(3) PCV hose to cylinder head cover
(4) Air hose to No.2 air hose
(5) Air hose to air by–pass valve

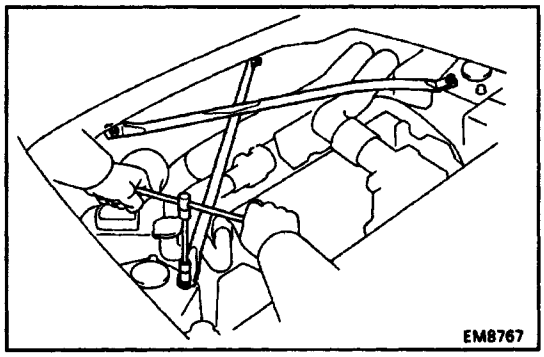

20. INSTALL UPPER SUSPENSION BRACE

Install the upper brace with the two bolts and two nuts.

Torque:

73 N–m (740 kgf–cm, 54 ft–lbf) for bolt
64 N–m (650 kgf–cm, 47 ft–lbf) for nut

21. INSTALL RH ENGINE HOOD SIDE PANEL
22. CONNECT CABLE TO NEGATIVE TERMINAL OF BATTERY
23. FILL WITH ENGINE OIL
24. START ENGINE AND CHECK FOR OIL LEAKS
25. RECHECK ENGINE OIL LEVEL
26. INSTALL ENGINE UNDER COVERS

LUBRICATION SYSTEM

DESCRIPTION

EG10J–01

A fully pressurized, fully filtered lubrication system has been adopted for this engine.

OPERATION

EG07R–03

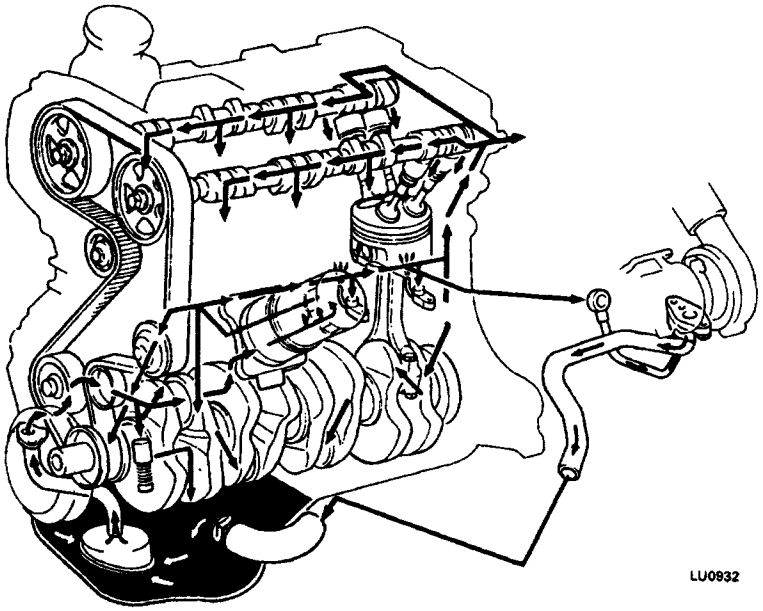

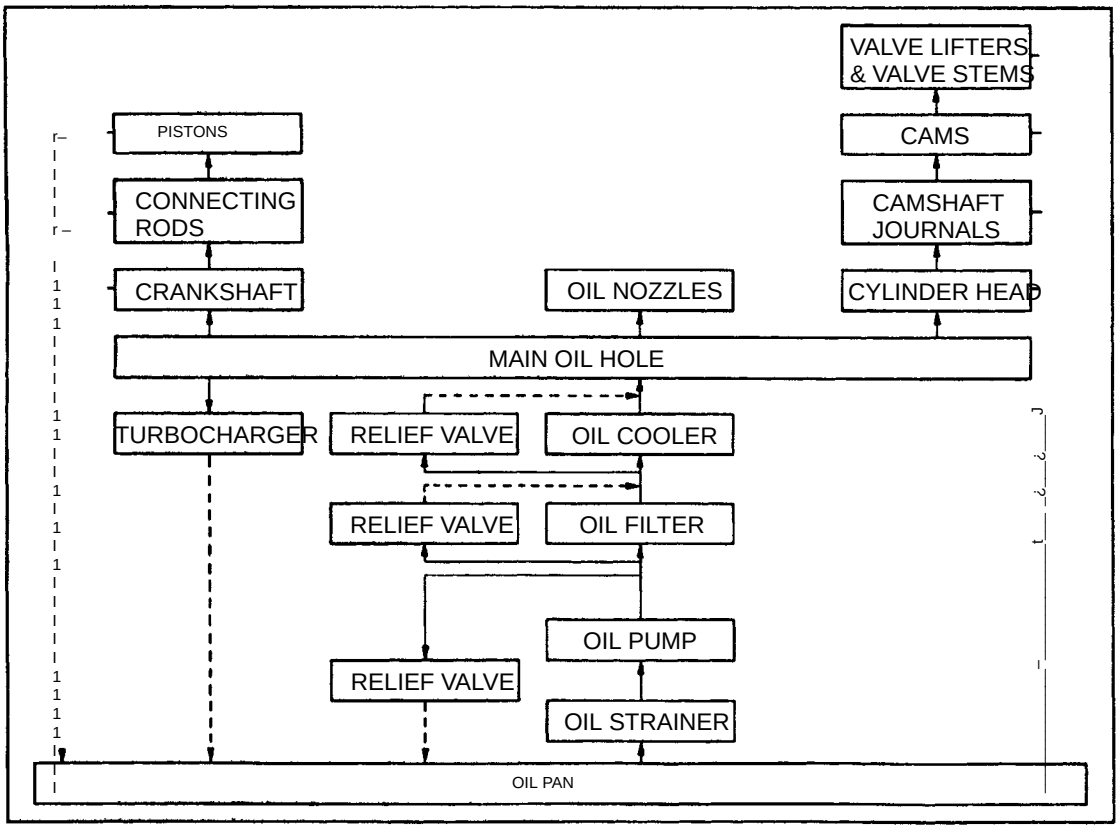

Z02850

A pressure feeding lubrication system has been adopted to supply oil to the moving parts of this engine. The lubrication system consists of an oil pan, oil pump, oil filter and other external parts which supply oil to the moving parts in the engine block. The oil circuit is shown in the illustration at the top of the previous page. Oil from the oil pan is pumped up by the oil pump. After it passes through the oil filter, it is through the various oil holes in the crankshaft and cylinder block. After passing through the cylinder block and performing its lubricating function, the oil is returned by gravity to the oil pan. A dipstick on the center left side of the cylinder block is provided to check the oil level.

OIL PUMP

The oil pump pumps up oil from the oil pan and feeds it under pressure to the various parts of the engine. An oil strainer is mounted in front of the inlet to the oil pump to remove impurities. The oil pump itself is a trochoid type pump, inside of which is a drive rotor and a driven rotor. When the drive rotor rotates, the driven rotor rotates in the same direction, and since the axis of the drive rotor shaft is different from the center of the driven rotor, the space between the two rotors is changed as they rotate. Oil is drawn in when the space widens and is discharged when the space becomes narrow.

OIL PRESSURE REGULATOR (RELIEF VALVE)

At high engine speeds, the engine oil supplied by the oil pump exceeds the capacity of the engine to utilize it. For that reason, the oil pressure regulator works to prevent an oversupply of oil. During normal oil supply, a coil spring and valve keep the by–pass closed, but when too much oil is being fed, the pressure becomes extremely high, overpowering the force of the spring and opening the valves. This allows the excess oil to flow through the valve and return to the oil pan.

OIL FILTER

The oil filter is a full flow type filter with a relief valve built into the paper filter element. Particles of metal from wear, airborne dirt, carbon and other impurities can get into the oil during use and could cause accelerated wear or seizing it allowed to circulate through the engine. The oil filter, integrated into the oil line, removes these impurities as the oil passes through it. The filter is mounted outside the engine to simplify replacement of the filter element. A relief valve is also included ahead of the filter element to relieve the high oil pressure in case the filter element becomes clogged with impurities. The relief valve opens when the oil pressure overpowers the force of the spring. Oil passing through the relief valve by–passes the oil filter and flows directly into the main oil hole in the engine.

PREPARATION

EG07P–01

SST (SPECIAL SERVICE TOOLS)

	09032–00100 Oil Pan Seal Cutter	
	09226–10010 Crankshaft Front & Rear Bearing Replacer	Crankshaft front oil seal
	09228–06500 Oil Filter Wrench	
	09616–30011 Steering Worm Bearing Adjusting Screw Wrench	Oil pump pulley
	09620–30010 Steering Gear Box Replacer Set	
	(09627–30010) Steering Sector Shaft Bushing . . Replacer	Oil pump oil seal
	(09631–00020) Handle	Oil pump oil seal

EG07Q–01

RECOMMENDED TOOLS

	09090–04000 Engine Sling Device	For suspending engine
	09200–00010 Engine Adjust Kit	
	09905–00013 Snap Ring Pliers	

EG07R–02

EQUIPMENT

Oil pressure gauge	
Torque wrench	

EG078–03

LUBRICANT

Item	Capacity	Classification
Engine oil Dry fill Drain and refill w/ Oil filter change w/o Oil filter change	4.3 liters (4.5 US qts, 3.8 Imp. qts) 3.9 liters (4.1 US qts, 3.4 Imp. qts) 3.6 liters (3.8 US qts, 3.2 Imp. qts)	API grade SG, Energy–Conserving II multigrade and recommended viscosity oil

SSM (SPECIAL SERVICE MATERIALS)

EG07Y–01

08826–00080 Seal packing or equivalent	Oil pan
08833–00080 Adhesive 1344, THREE BOND 1344. LOCTITE 242 or equivalent	Oil pressure switch

SERVICE SPECIFICATIONS

EG088–01

SERVICE DATA

Oil pressure	At idle speed (normal operating temperature) At 3,000 rpm (normal operating temperature)	29 kPa (0.3 kgf/cm², 43 psi) or more 245 – 490 kPa (2.5 – 5.0 kgf/cm², 36 – 71 psi)
Oil pump	Body clearance (STD) Body clearance (Maximum) Tip clearance (STD) Tip clearance (Maximum)	0.10 – 0.16 mm (0.0039 – 0.0063 in.) 0.20 mm (0.0079 in.) 0.04 – 0.16 mm (0.0016 – 0.0063 in.) 0.20 mm (0.0079 in.)

EG088–02

TORQUE SPECIFICATIONS

Part tightened	N·m	kgf·cm	ft·lbf
Oil pan x Drain plug	39	400	29
Oil pump body cover x Oil pump body	8.8	90	78 in.·lbf
Oil pump x Cylinder block	7.8	80	69 in.·lbf
Oil pump pulley x Oil pump drive rotor	35	355	26
No.2 idler pulley x Cylinder block	43	440	32
Oil strainer x Cylinder block	5.4	55	48 in.·lbf
Oil strainer x Oil pump	5.4	55	48 in.·lbf
Oil pan x Cylinder block	5.4	55	48 in.·lbf
Oil pan x Oil pump	5.4	55	48 in.·lbf
Main TWC x Turbine outlet elbow	29	300	22
TWC stay x Main TWC	59	600	43
two stay x Cylinder block	59	600	43
Stiffener plate x Cylinder block	37	380	27
Stiffener plate x Transaxle case	37	380	27
Clutch release cylinder x Transaxle	12	120	9
Front engine mounting bracket x Transaxle	77	790	57
Front engine mounting insulator x Body	77	790	57
Front engine mounting insulator x Bracket	96	980	71
Front exhaust pipe x Main TWC	62	630	46
Front exhaust pipe support bracket x Suspension crossmember	21	210	15
Suspension member damper x Suspension crossmember	21	210	15
Tailpipe x Body bracket	66	670	48
Tailpipe x Front exhaust pipe	43	440	32
Tailpipe bracket x Front exhaust pipe bracket	19	190	14
A/C idler pulley bracket x Cylinder block (12 mm head)	25	250	18
A/C idler pulley bracket x Cylinder block (14 mm head)	27	275	20
A/C idler pulley bracket x RH engine hanger	37	375	27
Upper suspension brace x Body (Bolt)	73	740	54
Upper suspension brace x Body (Nut)	64	650	47
Lower suspension brace x Body	73	740	54
Oil cooler x Cylinder block (Bolt)	78	800	58
Oil cooler x Cylinder block (Relief valve)	78	800	58
Oil cooler x Cylinder block (Nut)	7.8	80	69 in.·lbf
Oil nozzle x Cylinder block	9.1	93	81 in.·lbf

AC IDLE–UP VALVE

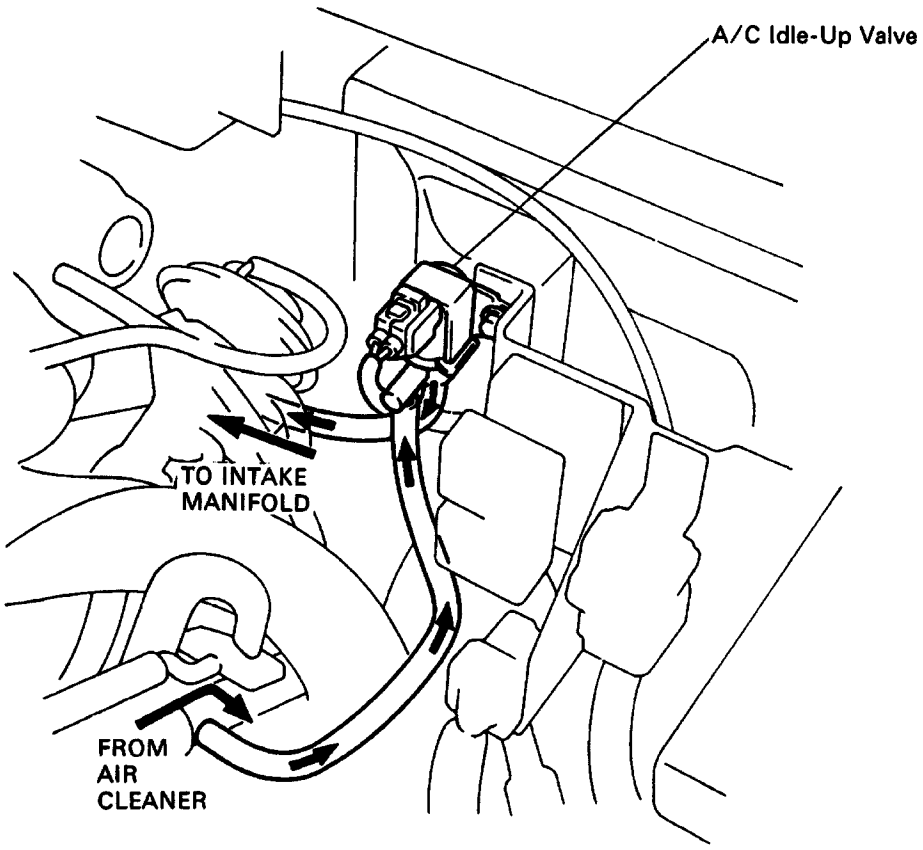

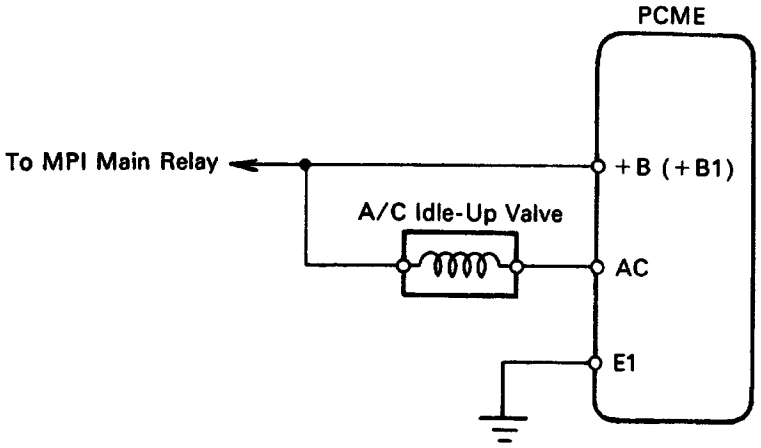

P05672
P01447

Z02815

EG0Z4–01

COMPONENTS FOR REMOVAL AND INSTALLATION

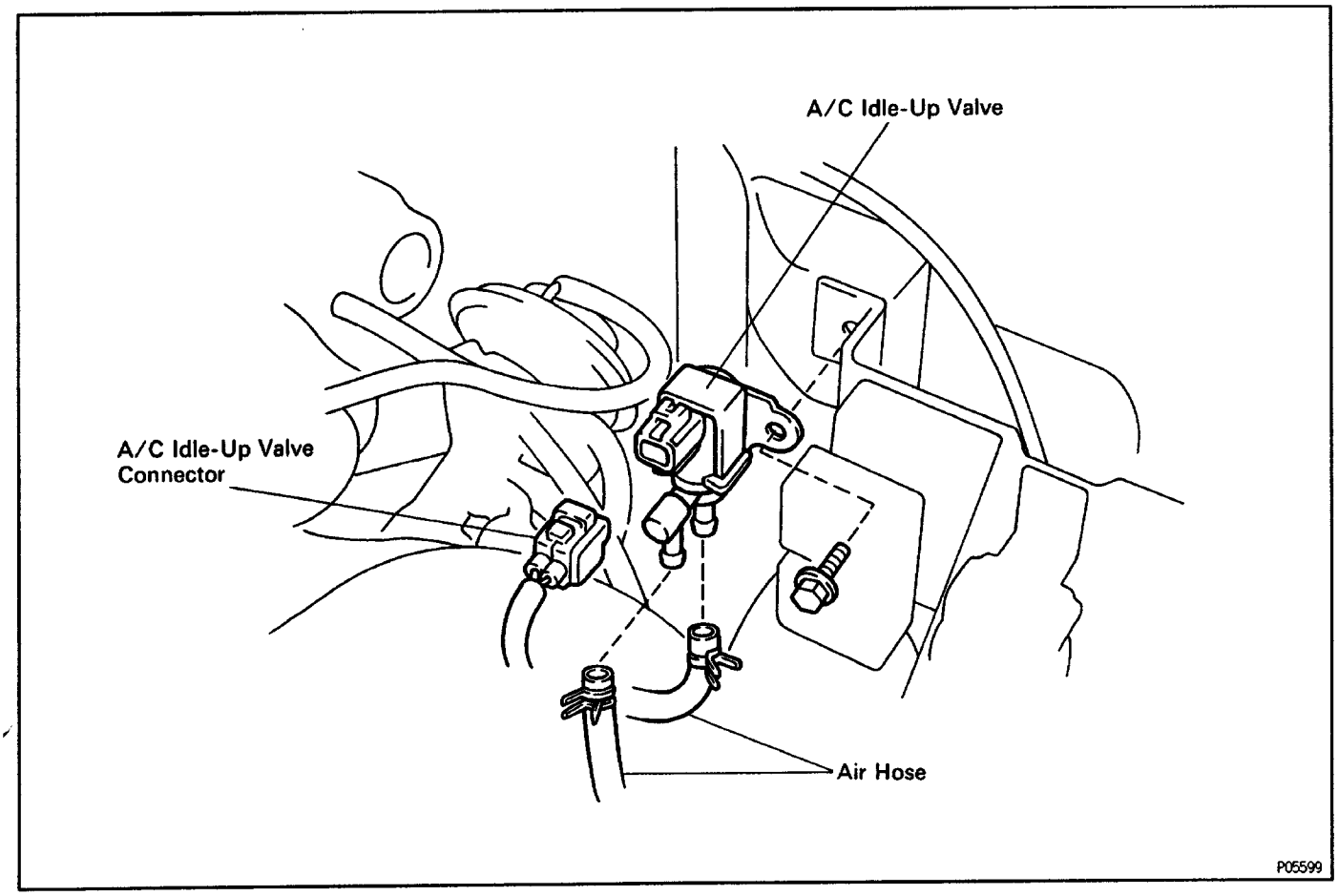

EG0Z5–01

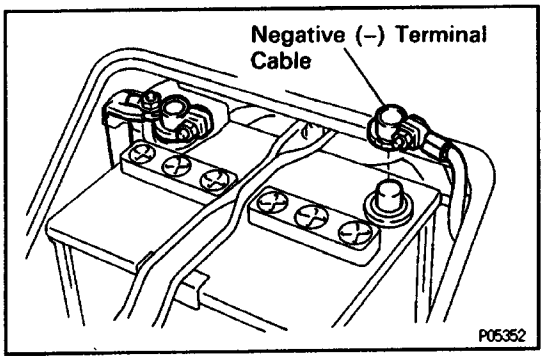

A/C IDLE–UP VALVE INSPECTION

(See Components for Removal and Installation)

1. DISCONNECT CABLE FROM NEGATIVE TERMINAL OF BATTERY

CAUTION: Turn the ignition switch to 'LOCK'. Disconnect the negative terminal from the battery. Wait at least 20 seconds before proceeding with work.

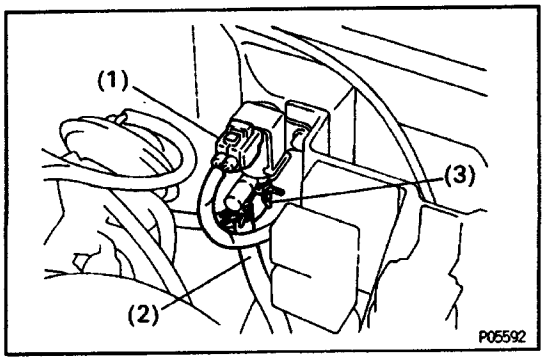

2. REMOVE IDLE–UP VALVE

(a) Disconnect the following connector and hoses:

(1) Idle–up valve connector

(2) Air hose (from No. 1 air tube) from port E of idle – up valve

(3) Air hose (from intake manifold) from port F of idle –up valve

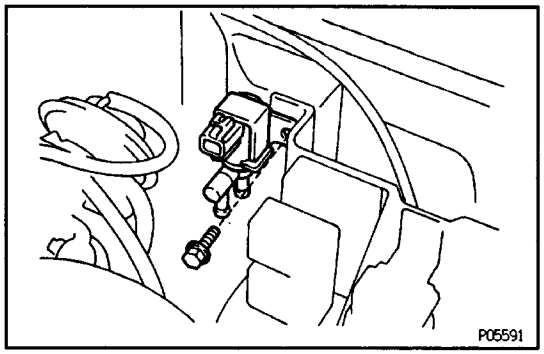

(b) Remove the bolt and idle–up valve.

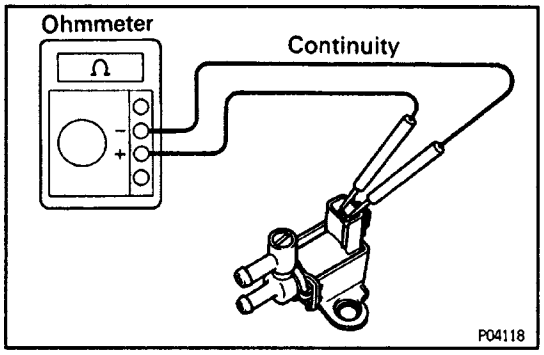

3. INSPECT IDLE–UP VALVE

A. Inspect idle–up valve for open circuit

Using an ohmmeter, check that there is continuity between the terminals.

Resistance (Cold):

30–34Ω

If there is no continuity, replace the idle –up valve.

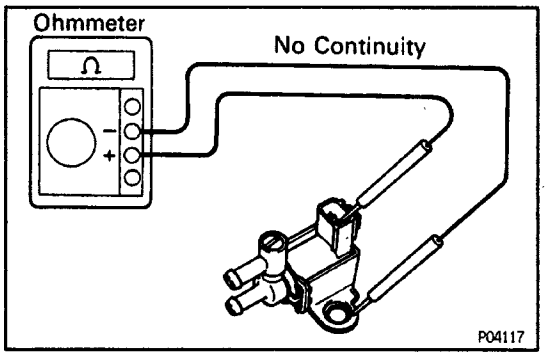

B. Inspect idle–up valve for ground

Using an ohmmeter, check that there is no continuity between each terminal and the body.

If there is continuity, replace the idle–up valve.

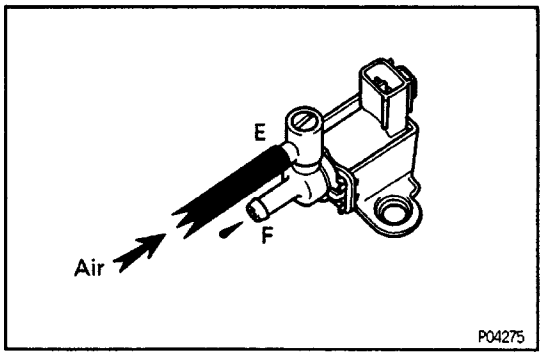

C. Inspect idle–up valve operation

(a) Check that the air does not flow from port E to port F.

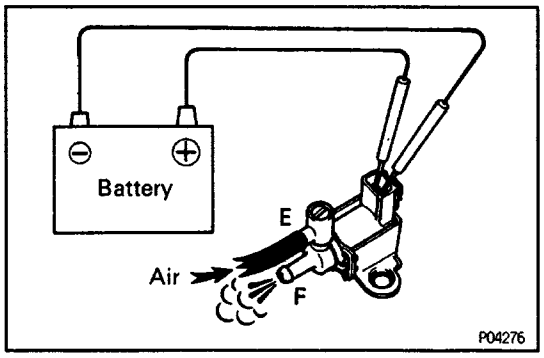

(b) Apply battery voltage across the terminals.

(c) Check that the air flows from port E to port F.

(f operation is nut as specified, replace the idle–up valve.

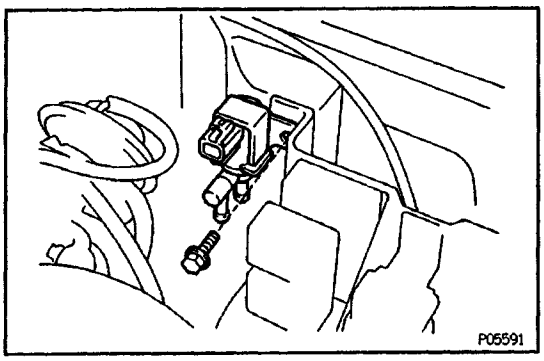

4. REINSTALL IDLE–UP VALVE

(a) Install the idle–up valve with the bolt.

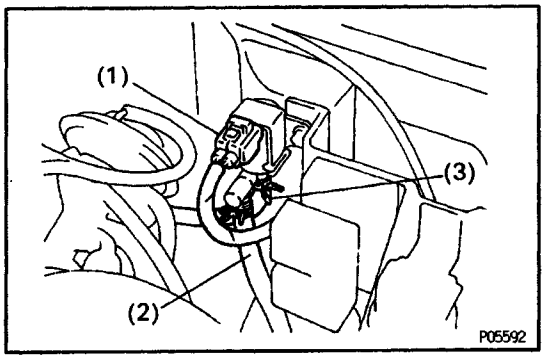

(b) Connect the following connector and hoses:

(1) Idle–up valve connector

(2) Air hose (from No. 1 air tube) to port E of idle–up valve

(3) Air hose (from intake manifold) to port F of idle – up valve

5. RECONNECT CABLE TO NEGATIVE TERMINAL OF BATTERY

AIR FLOW SENSOR

EG0YG–01

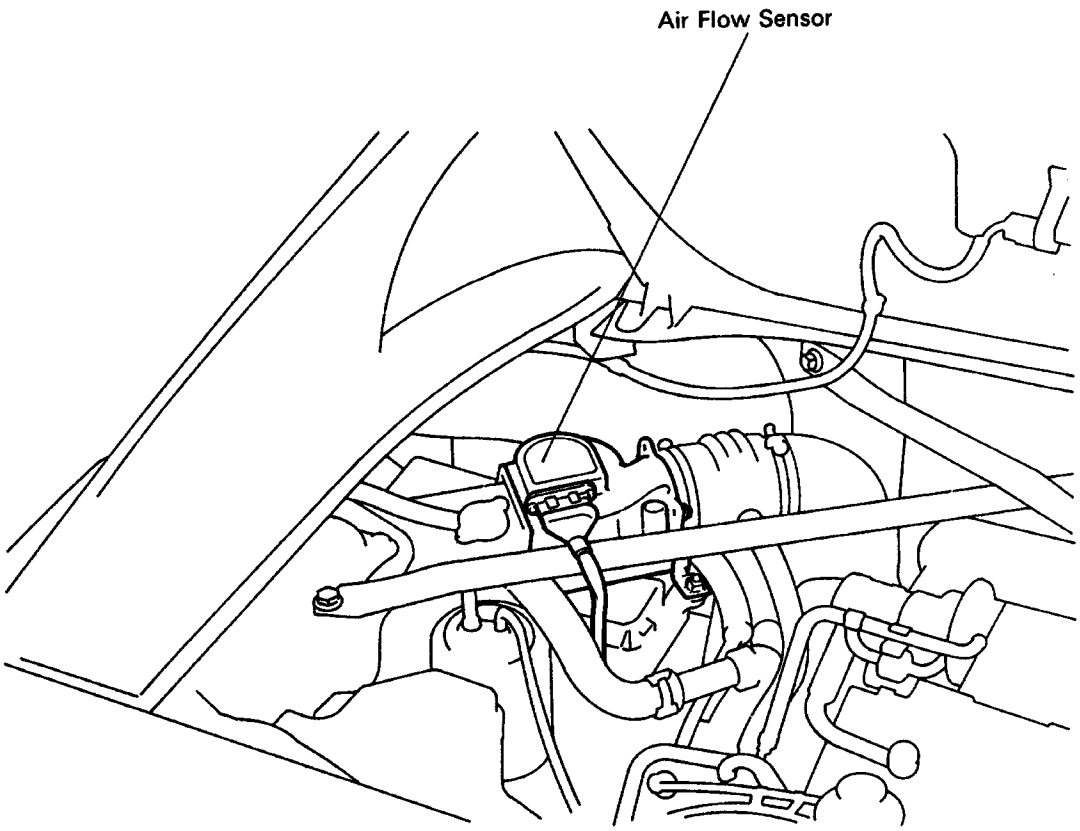

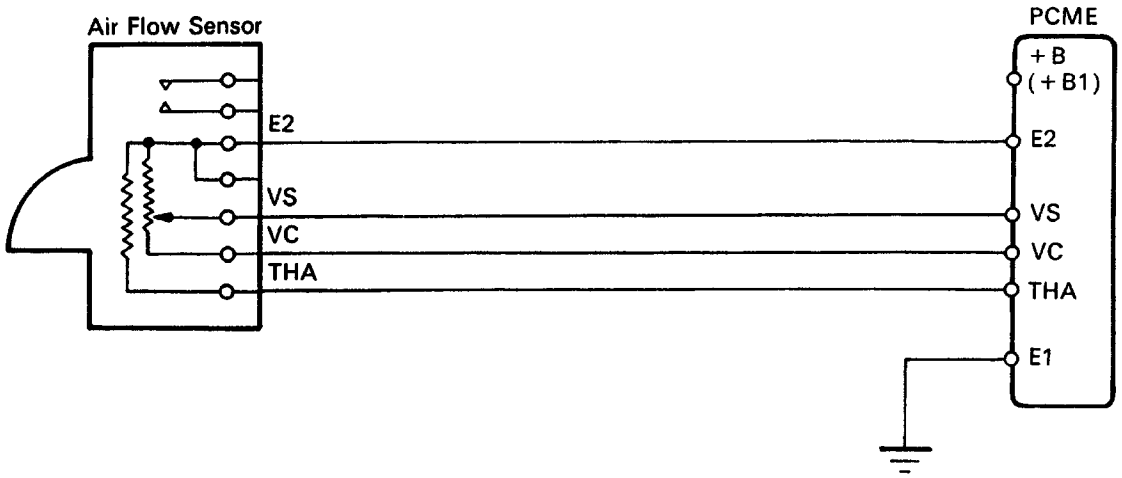

P04097
P05967

Z02961

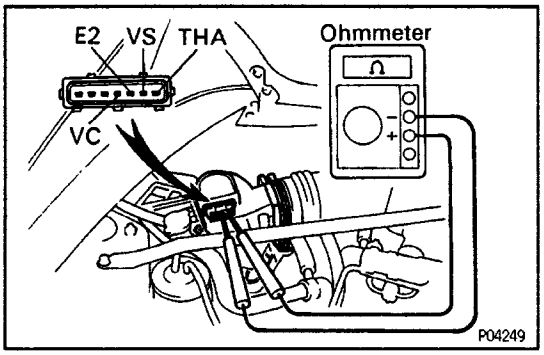

EG0YH–01

ON–VEHICLE INSPECTION

INSPECT RESISTANCE OF AIR FLOW SENSOR

(a) Disconnect the air flow sensor connector.

(b) Using an ohmmeter, measure the resistance between each terminal.

Between terminals	Resistance	Temperature
VS –e2	200 – 6000	–
VC –E2	200 –4000	–
THA – E2	10–20kΩ	–20˚C (–4˚F)
THA – E2	4–7 kΩ	0˚C (32˚F)
THA – E2	2 – 3 kΩ	20˚ C (68˚ F)
THA – E2	0.9 – 1.3 kΩ	40˚ C (104˚ F)
THA – E2	0.4–0.7k0	60˚ C (140˚ F)

If the resistance is not as specified, replace the air flow sensor.

(c) Reconnect the air flow sensor connector.

EG0YJ–01

COMPONENTS FOR REMOVAL AND INSTALLATION

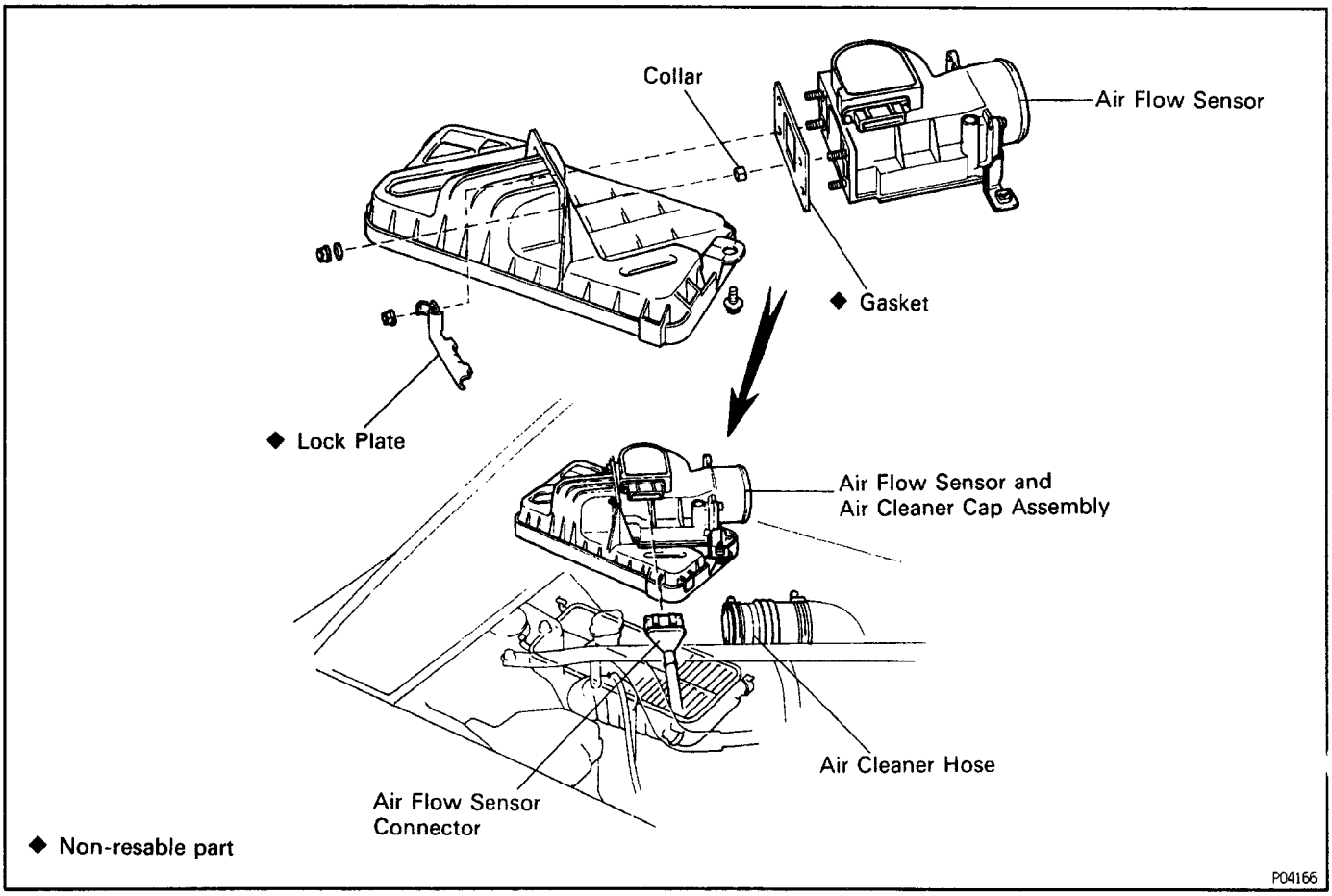

EG0YK–01

AIR FLOW SENSOR REMOVAL

(See Components for Removal and Installation)

1. DISCONNECT CABLE FROM NEGATIVE TERMINAL OF BATTERY

CAUTION: Turn the ignition switch to 'LOCK'. Disconnect the negative terminal from the battery. Wait at least 20 seconds before proceeding with work.

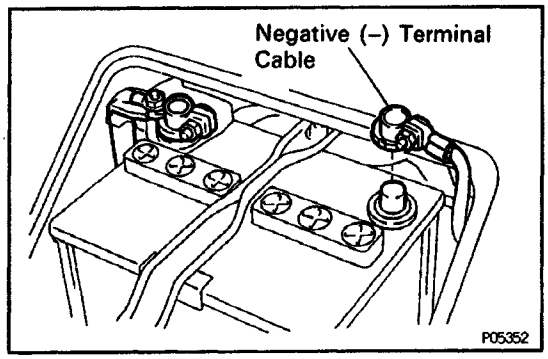

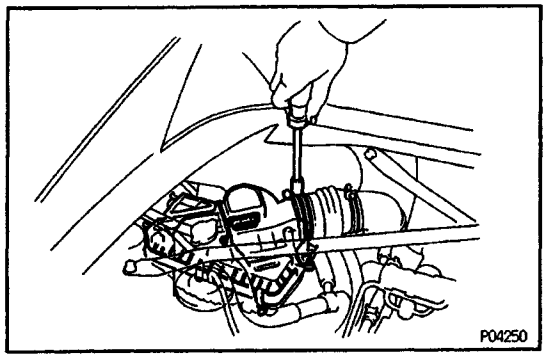

2. DISCONNECT AIR FLOW SENSOR CONNECTOR

3. REMOVE AIR CLEANER CAP AND AIR FLOW SENSOR ASSEMBLY

(a) Disconnect the air cleaner hose from the air flow sensor.

(b) Disconnect the four clamps, and remove the air cleaner cap and air flow sensor assembly.

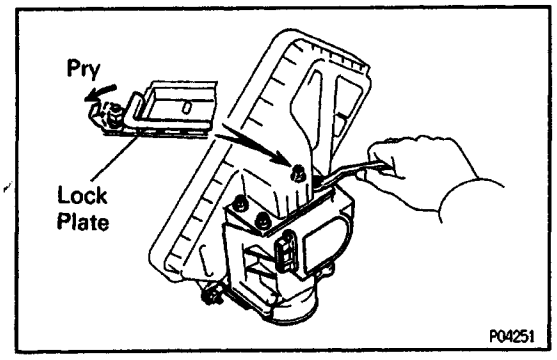

3. REMOVE AIR FLOW SENSOR FROM AIR CLEANER CAP

(a) Remove the bolt holding the bracket to air cleaner cap.

(b) Pry oft the lock plate.

(c) Remove the four nuts, three plate washers and lock plate.

(d) Remove the air flow sensor, gasket and four collar.

EG0H2–02

AIR FLOW SENSOR INSPECTION

INSPECT AIR PLOW SENSOR

Using an ohmmeter, measure the resistance between terminals VS and E2 by moving the measuring plate.

Resistance:

200 – 600Ω at fully closed

20 – 1,200Ω at fully open

HINT: Resistance will change in a wave pattern as the measuring plate slowly opens.

If the resistance is not as specified, replace the air flow sensor.

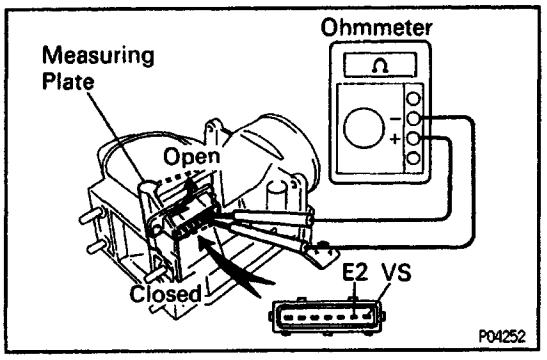

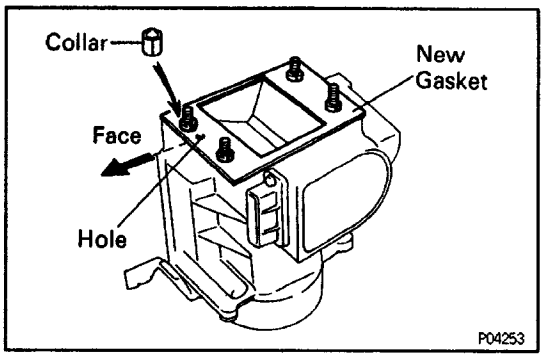

AIR FLOW SENSOR INSTALLATION EG0H3-02

(See Components for Removal and Installation)

1. INSTALL AIR FLOW SENSOR TO AIR CLEANER CAP

(a) Place anew gasket and the four collars on the air flow sensor.

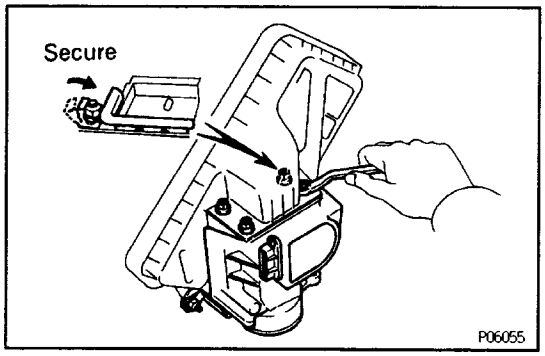

(b) Install the air flow sensor with the lock plate, three plate washers and four nuts.
(c) Secure the nut with the lock plate.
(d) Install the bolt holding the bracket and air cleaner cap.

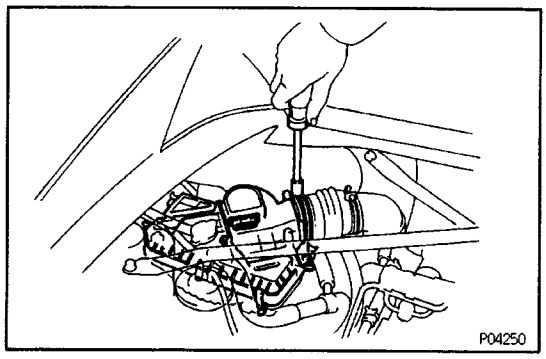

2. INSTALL AIR CLEANER CAP AND AIR FLOW SENSOR ASSEMBLY

(a) Install the air cleaner cap to the air cleaner case with the four clips.
(b) Connect the air cleaner hose to the air flow sensor.

3. CONNECT AIR FLOW SENSOR CONNECTOR

4. CONNECT CABLE TO NEGATIVE TERMINAL OF BATTERY

CIRCUIT OPENING RELAY

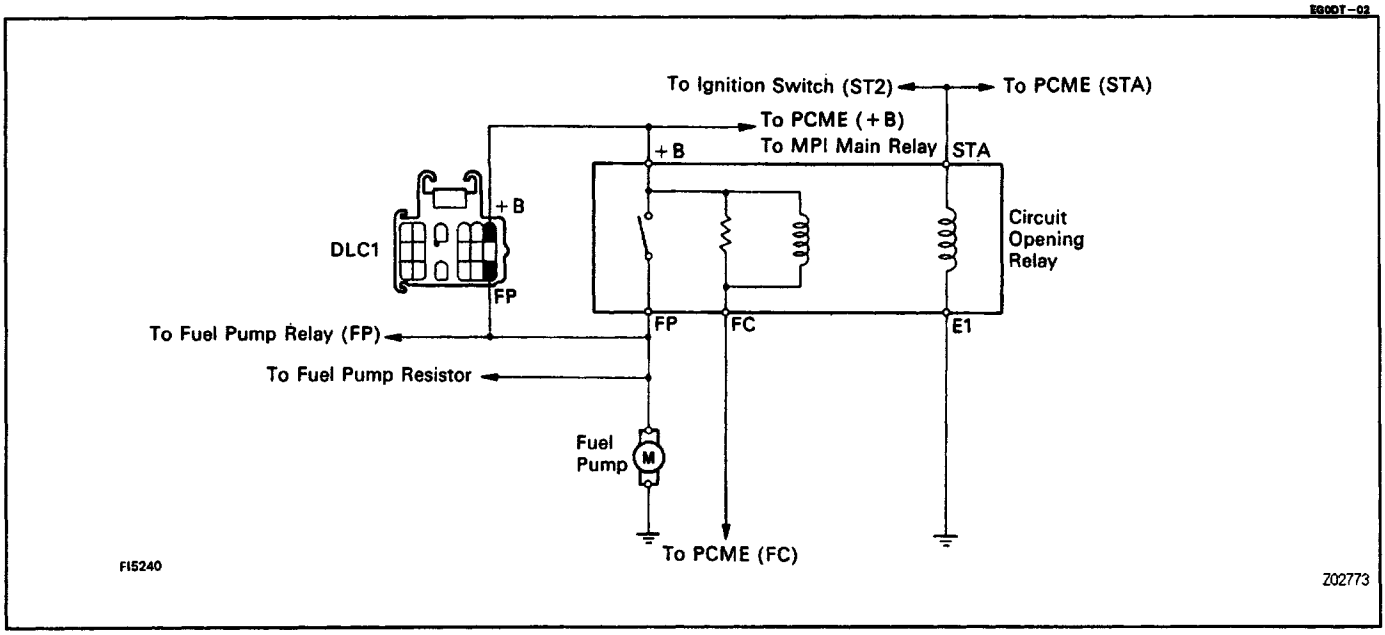

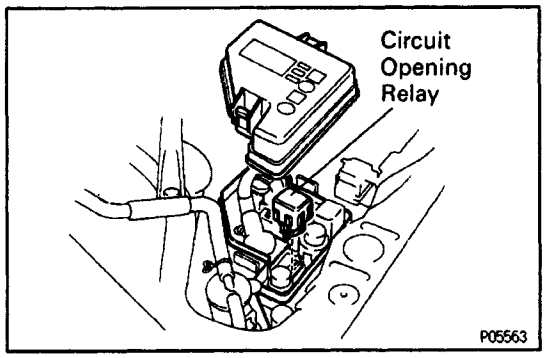

CIRCUIT OPENING RELAY ("C/OPN") INSPECTION

EG0YU–01

1. REMOVE CIRCUIT OPENING RELAY

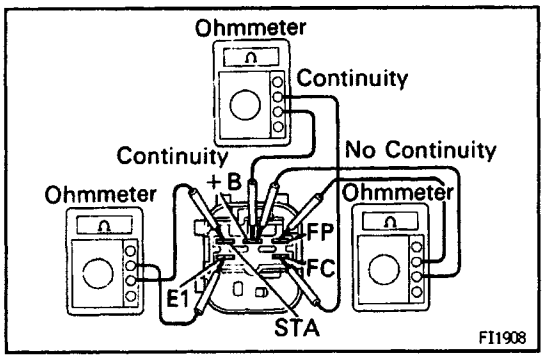

2. INSPECT CIRCUIT OPENING RELAY

A. Inspect relay continuity

(a) Using an ohmmeter, check that there is continuity between terminals STA and E1.

(b) Check that there is continuity between terminals +B and FC.

(c) Check that there is no continuity between terminals +B and FP.

If continuity is not as specified, replace the relay.

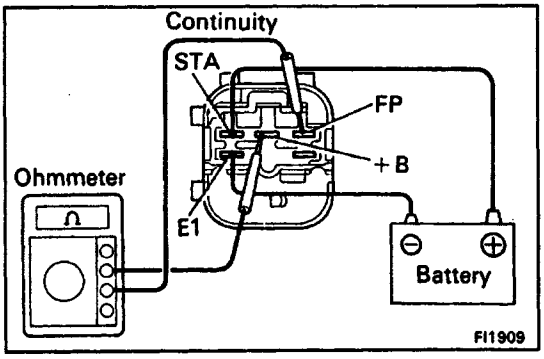

B. Inspect relay operation

(a) Apply battery voltage across terminals STA and E1.

(b) Using an ohmmeter, check that there is continuity between terminals +B and FP.

If operation is not as specified, replace the relay.

3. REINSTALL CIRCUIT OPENING RELAY

COLD START INJECTOR TIME SWITCH

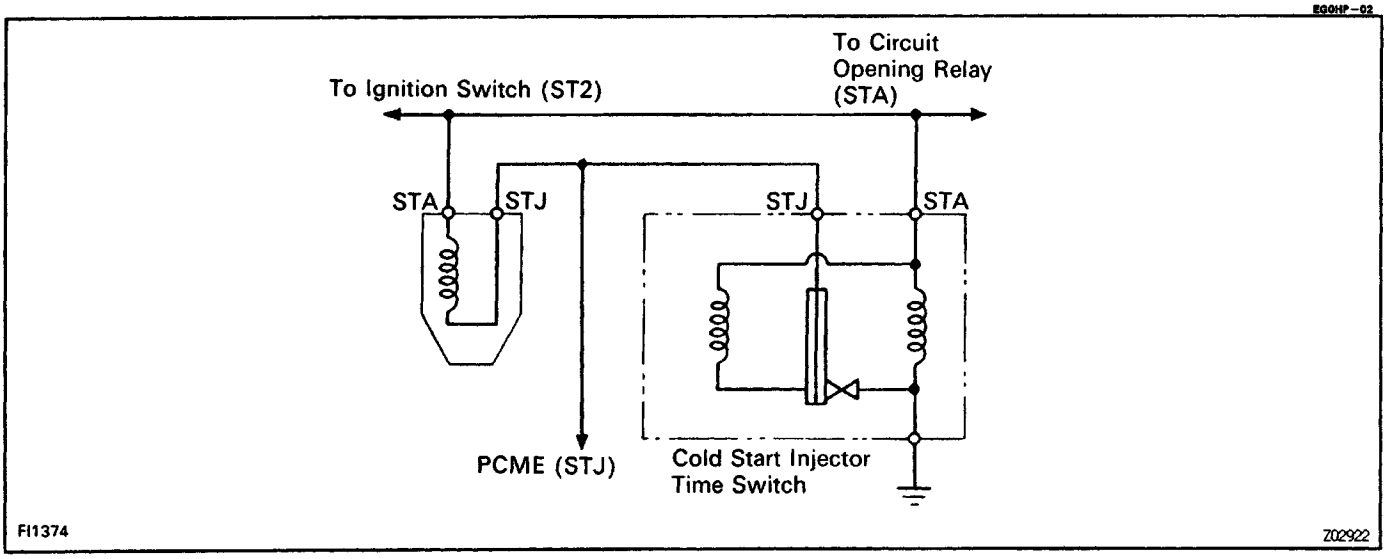

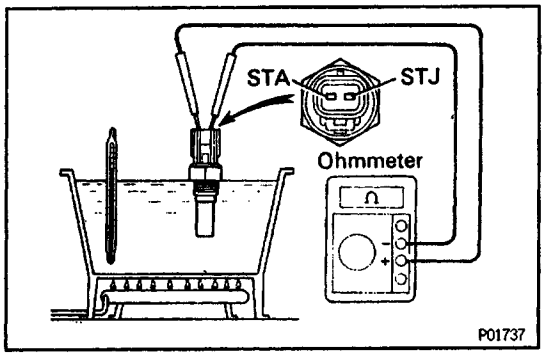

EG0HQ–02

COLD START INJECTOR TIME SWITCH INSPECTION

1. REMOVE COLD START INJECTOR TIME SWITCH

2. INSPECT COLD START INJECTOR TIME SWITCH

Using an ohmmeter, measure the resistance between each terminal.

Resistance:

STA – STJ

30 – 50Ωbelow 15˚ C (59˚F)

70 – 90Ωabove 30˚ C (86˚ 9)

STA – Ground

30–90Ω

If the resistance is not as specified, replace the switch.

3. REINSTALL COLD START INJECTOR TIME SWITCH

COLD START INJECTOR

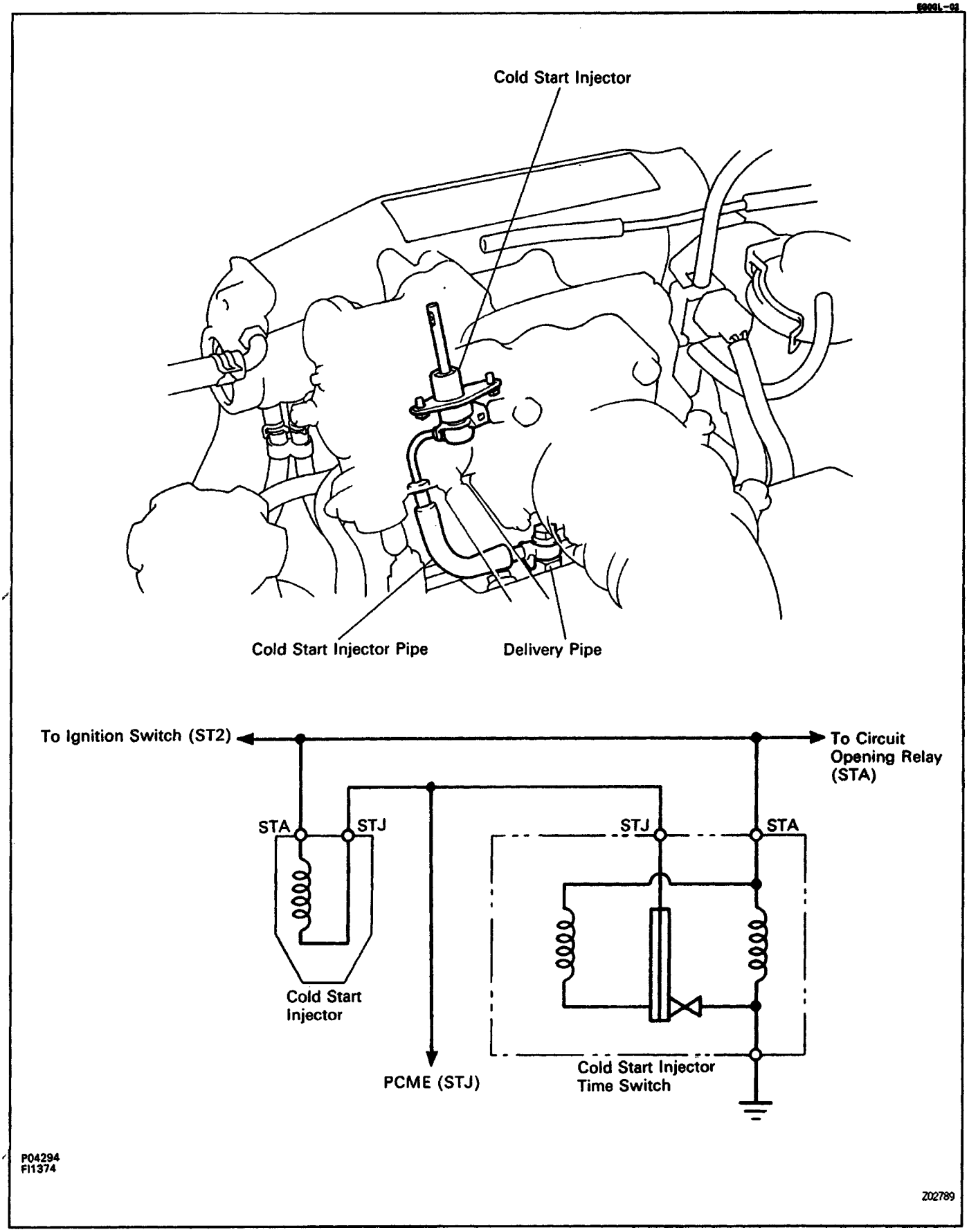

EGOY3–01

ON–VEHICLE INSPECTION

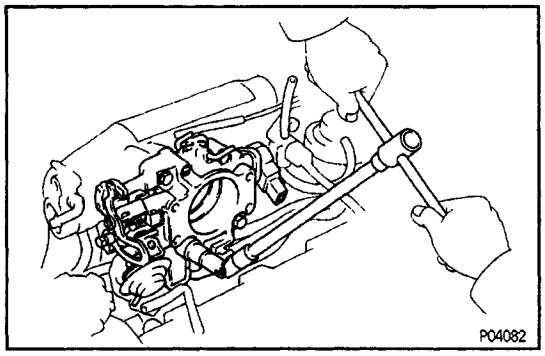

1. REMOVE THROTTLE BODY
(See Throttle Body Removal)

2. DISCONNECT COLD START INJECTOR CONNECTOR

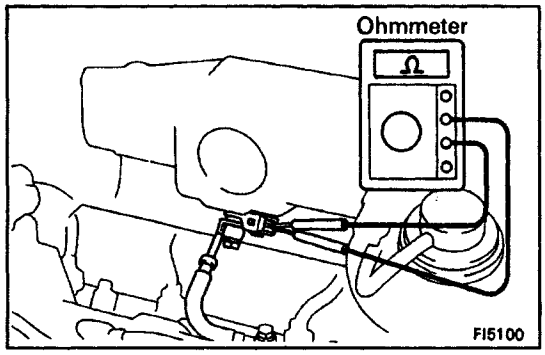

3. INSPECT COLD START INJECTOR

Using an ohmmeter, measure the resistance between the terminals.

Resistance:

2–4Ω

If the resistance is not as specified, replace the cold start injector.

4. RECONNECT COLD START INJECTOR CONNECTOR

5. REINSTALL THROTTLE BODY
(See Throttle Body Installation)

COMPONENTS FOR REMOVAL AND INSTALLATION

EG10X–01

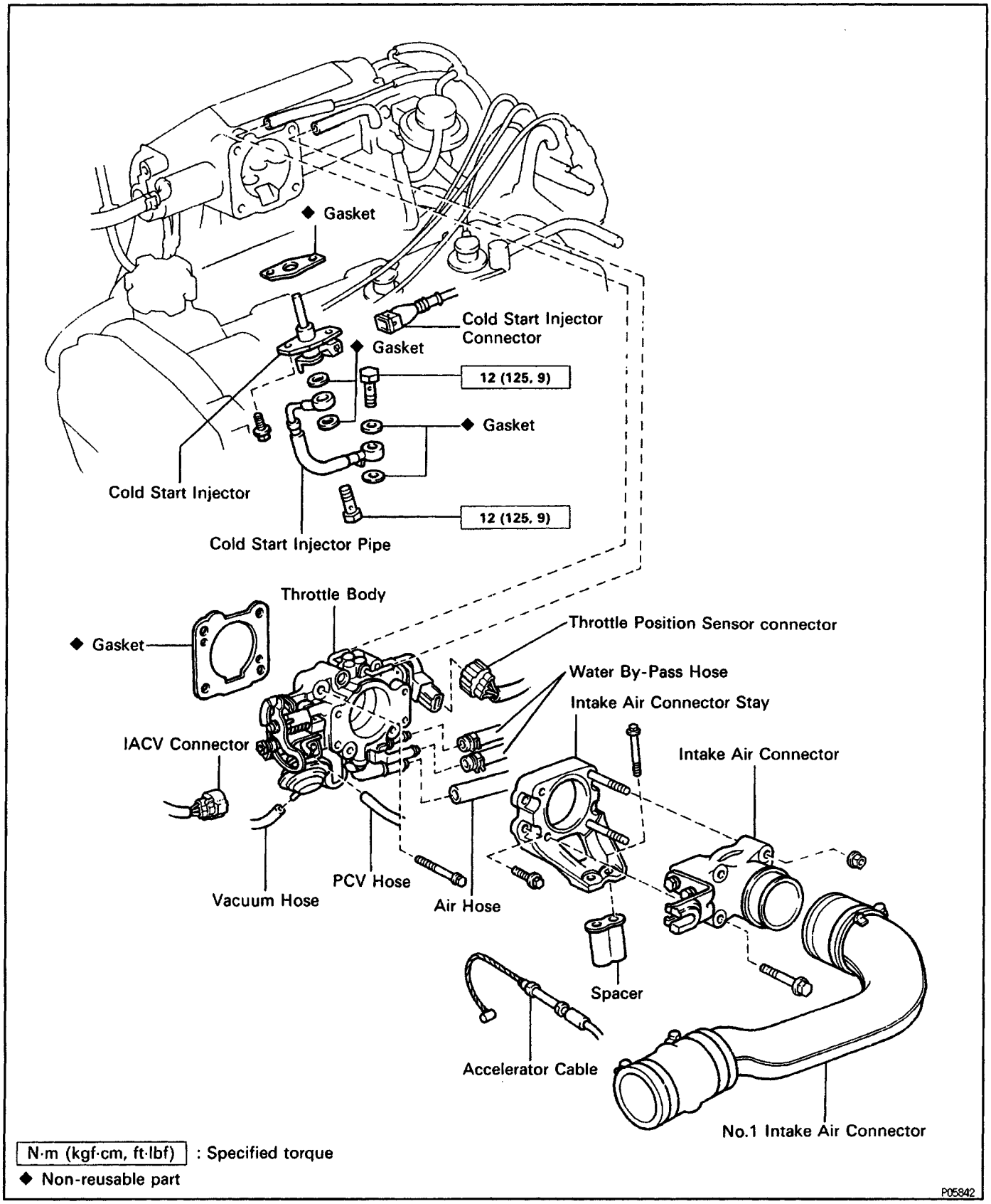

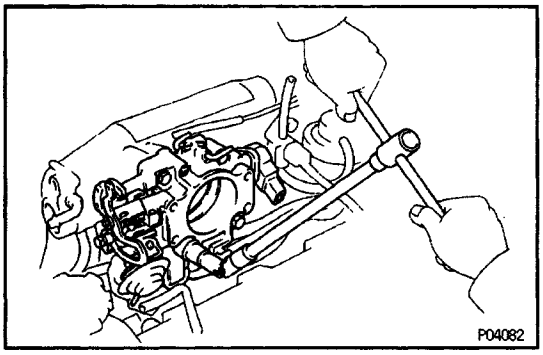

EGOY4–01

COLD START INJECTOR REMOVAL
(See Components for Removal and installation)
1. REMOVE THROTTLE BODY
(See Throttle Body Removal)

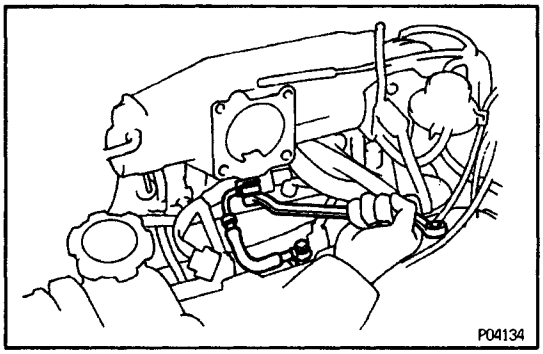

2. REMOVE COLD START INJECTOR PIPE

Remove the two union bolts, four gaskets and cold start injector pipe.

CAUTION:

- **Put a suitable container or shop towel under the injector pipe.**
- **Slowly loosen the union bolts.**

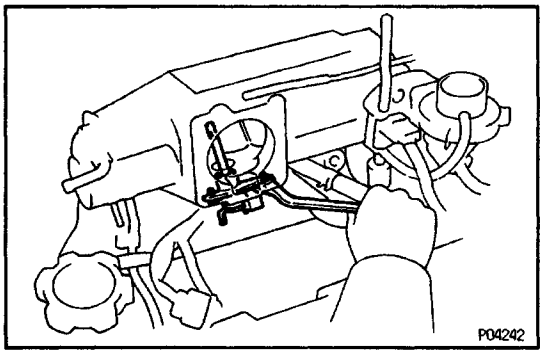

3. REMOVE COLD START INJECTOR

(a) Disconnect the cold start injector connector.
(b) Remove the two bolts, cold start injector and gasket.

COLD START INJECTOR INSPECTION

EGOY4–02

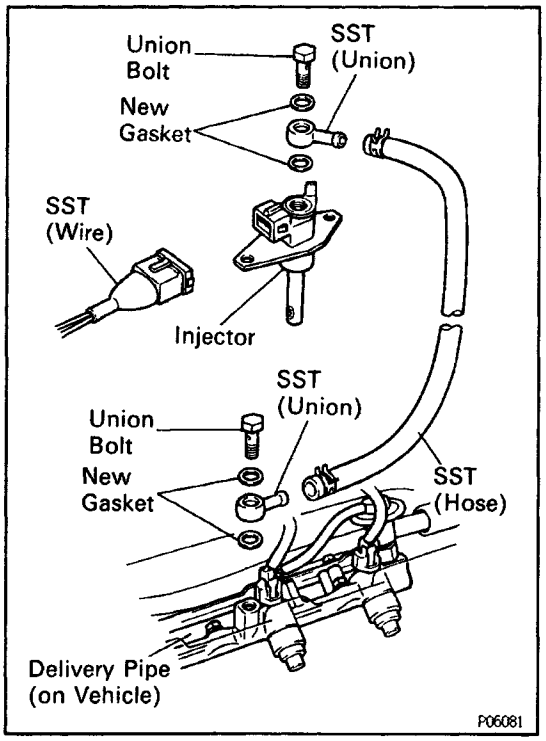

1. INSPECT INJECTION OF COLD START INJECTOR

CAUTION: Keep injector clear of sparks during the test.

(a) Install SST (two unions) to the injector and delivery pipe with four new gaskets and the union bolts.
SST 09268–41045 (09268–41080)
(b) Connect SST (hose) to the unions.
SST 09268–41045
(c) Connect SST (wire) to the injector.
SST 09842–30050
(d) Put a container under the injector.

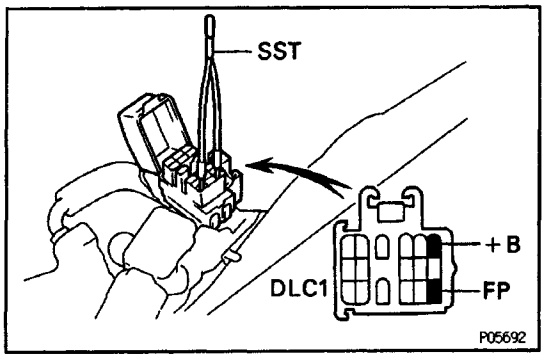

(e) Using SST, connect terminals +B and FP of the data link connector.
SST 09843–18020
(f) Reconnect the battery negative (–) cable.

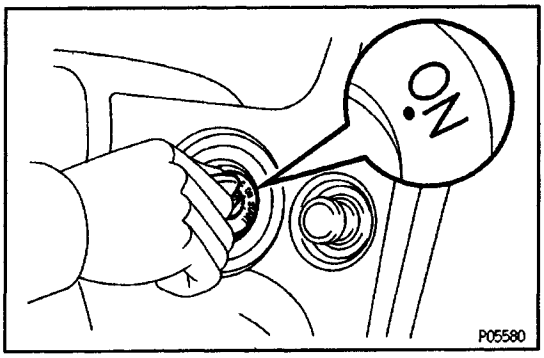

(g) Turn the ignition switch ON.
NOTICE: Do not start the engine.

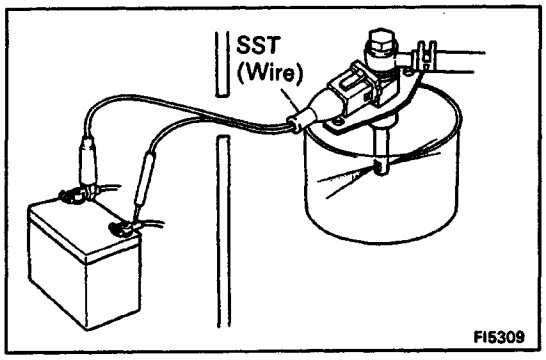

(h) Connect the test probes of the SST (wire) to the battery, and check that the fuel spray is as shown.
SST 09842–30050
NOTICE: Perform this check within the shortest possible time.

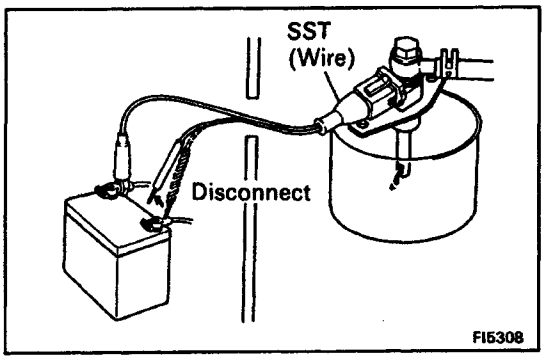

2. INSPECT LEAKAGE
(a) In the condition above, disconnect the test probes of SST (wire) from the battery and check fuel leakage from the injector.
SST 09842–30050
Fuel drop: One drop or less per minute

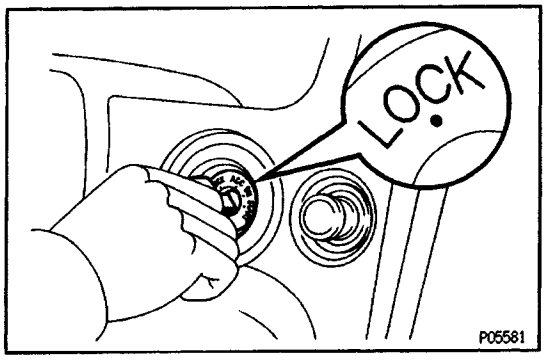

(b) Turn the ignition switch OFF.
(c) Disconnect the battery negative (–) cable.
(d) Remove the SST.
SST 09268–41045, 09842–30050, 09843–18020

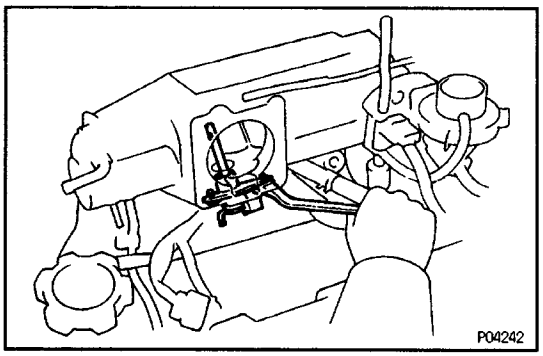

COLD START INJECTOR INSTALLATION

(See Components for Removal and Installation)

1. INSTALL COLD START INJECTOR

(a) Install a new gasket and the cold start injector with the two bolts.

Torque: 5.9 N–m (60 kgf–cm, 52 in.–lbf)

(b) Connect the cold start injector connector.

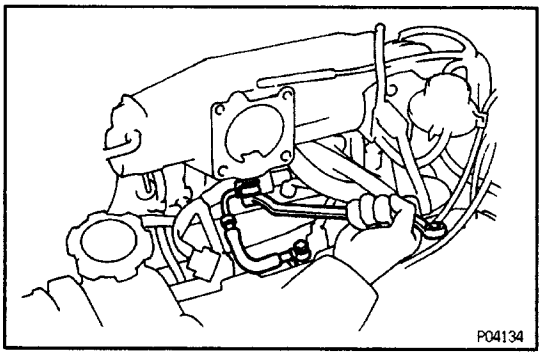

2. INSTALL COLD START INJECTOR PIPE

Install the cold start injector pipe with four new gaskets and two union bolts.

Torque: 12 N–m (125 kgf–cm, 9 ft–lbf)

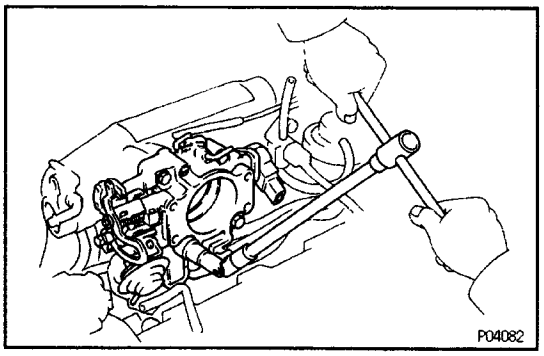

3. INSTALL THROTTLE BODY

(See Throttle Body Installation)

4. START ENGINE AND CHECK FOR FUEL LEAKS

SMPI SYSTEM

DESCRIPTION

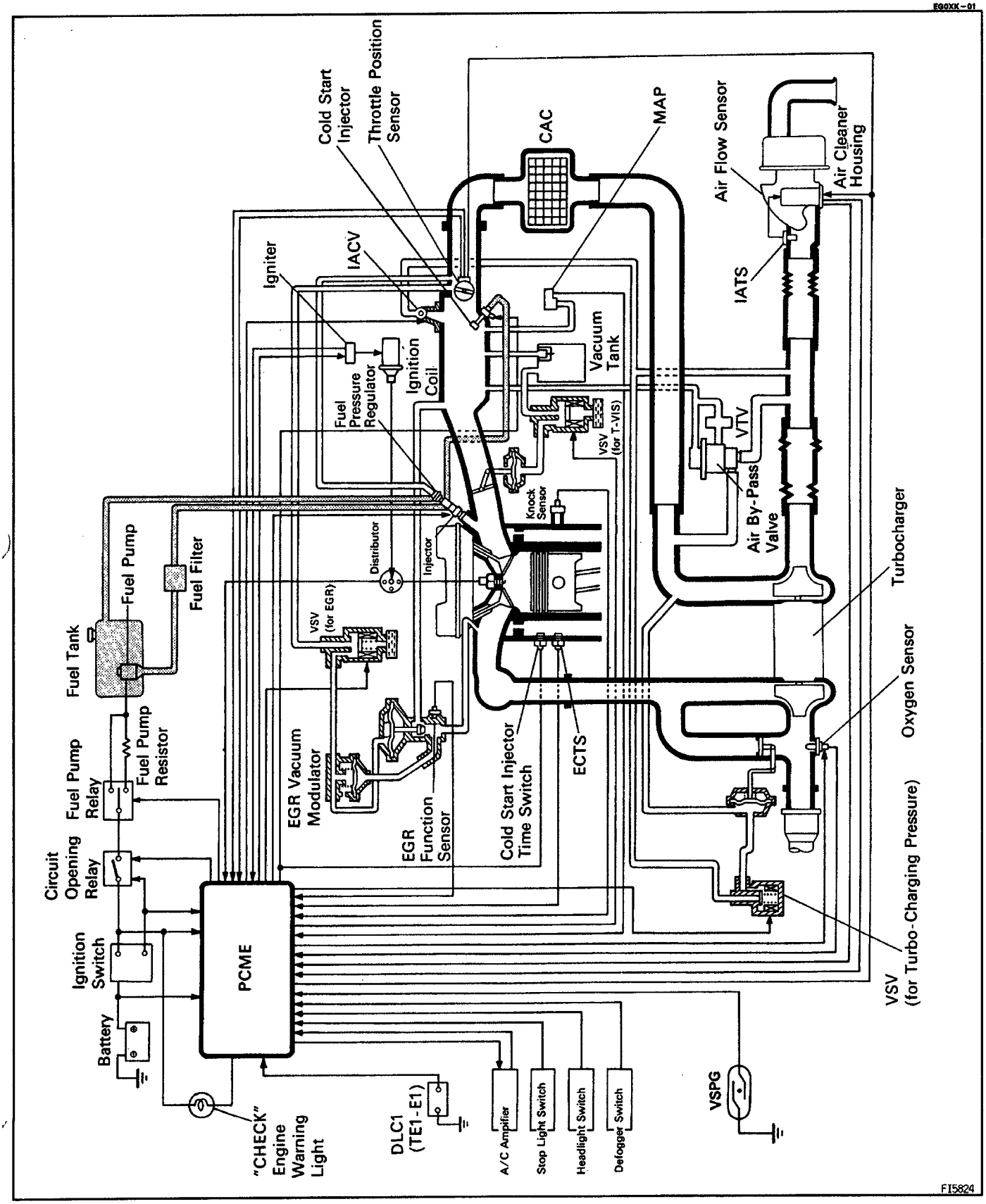

The SMPI system is composed of three basic sub–systems: Fuel, Air Induction and Electronic Control Systems.

FUEL SYSTEM

Fuel is supplied under constant pressure to the SMPI injectors by an electric fuel pump. The injectors inject a metered quantity of fuel into the intake manifold in accordance with signals from the PCM E (Powertrain Control Module (Engine)).

AIR INDUCTION SYSTEM

The air induction system provides sufficient air for engine operation.

ELECTRONIC CONTROL SYSTEM

The MR2 3S–GTE engine is equipped with a TOYOTA Computer Controlled System (TCCS) which centrally controls the SMPI, El. IAC, Diagnosis systems etc. by means of a Powertrain Control Module (PCME–formerly SMPI computer) employing a microcomputer.

By means of the PCME, the controls the following functions:

1. Multipoint Electronic Fuel Injection

The PCM receives signals from various sensors indicating changing engine operation conditions such as:

- Intake air volume
- Intake air temperature
- Coolant temperature
- Engine rpm
- Acceleration/deceleration
- Exhaust oxygen content etc.

The signals are utilized by the PCME to –determine the injection duration necessary for an optimum air–fuel ratio.

2. Electronic Ignition (EI)

The PCME is programmed with data for optimum ignition timing under any and a!! operating conditions.

Using data provided by sensors which monitor various engine functions (rpm, coolant tempera–ture, etc.), the microcomputer (PCME) triggers the spark at precisely the right instant. (See IG section)

3. Idle Air Control (IAC)

The PCME is programmed with target idling speed values to respond to different engine conditions (coolant temperature, air conditioner ON/OFF, etc.). Sensors transmit signals to the PCME which control the flow of air through the by–pass of the throttle valve and adjust idle speed to the target value.

4. Diagnosis

The PCME detects any malfunctions and abnormalities in the sensor network and lights a ” CHECK” engine warning light on the combination meter. At the same time, the trouble is identified and a diagnostic trouble code is recorded by the PCME. The diagnostic trouble code can be read by the number of blinks of the ”CHECK” engine warning light when terminals TE 1 and E 1 are connected. The diagnostic trouble codes are refer to the later page. (See page EG1–286)

5. Fail–Safe Function

In the event of the sensor malfunctioning, a back–up circuit will take over to provide minimal driveability, and the ”CHECK” engine warning light will illuminate.

DIAGNOSIS SYSTEM DESCRIPTION

EGQJB–02

The PCME contains a built–in self–diagnosis system by which troubles with the engine signal network are detected and a ”CHECK” engine warning light on the combination meter lights up. By analyzing various signals as shown in the later table (See page EG1–288) the PCME detects system malfunctions relating to the sensors or actuators.

The self –diagnosis system has two modes, a normal mode and a test mode.

If a malfunction is detected when in the normal mode, the PCME lights up the ”CHECK” engine warning light to inform the driver of the occurrence of a malfunction. (For some codes the light does not come on.) The light goes off automatically when the malfunction has been repaired. But the diagnostic trouble code(s) remains stored in the PCME memory. The PCME stores the code(s) until it is cleared by removing the EFI fuse with the ignition switch off.

The diagnostic trouble code can be read by the number of blinks of the ”CHECK” engine warning light when TE1 and E1 terminals on the data link connector 1 are connected. When 2 or more codes are indicated, the lowest number (code) will appear first.

If a malfunction is detected when in the test mode, the PCME lights up the ”CHECK” engine warning light to inform the technician of the occurrence of a malfunction (except for code Nos. 42, 43 and 51). In this case, TE2 and E1 terminals on the data link connector 1 should be connected as shown later. (See page EG1–283)

In the test mode, even if the malfunction is corrected, the malfunction code is stored in the PCME memory even when the ignition switch is off (except code Nos. 42, 43 and 51). This also applies in the normal mode. The diagnostic mode (normal or test) and the output of the ”CHECK” engine warning light can be selected by connecting the TE1, TE2 and E 1 terminals on the data link connector 1, as shown later.

A test mode function has been added to the functions of the self–diagnosis system of the normal mode for the purpose of detecting malfunctions such as poor contact, which are difficult to detect in the normal mode. This function fills up the self–diagnosis system. The test mode can be implemented by the technician following the appropriate procedures of check terminal connection and operation described later. (See page EG1–283)

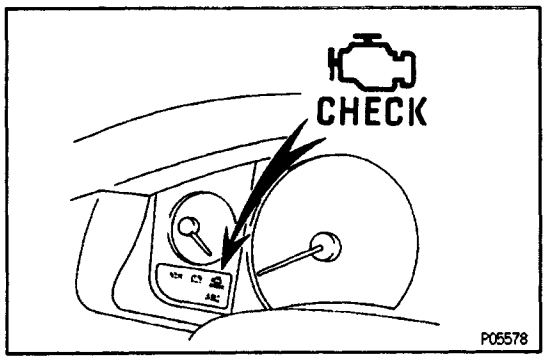

”CHECK” ENGINE WARNING LIGHT CHECK

1. The ”CHECK” engine warning light will come on when the ignition switch is placed at ON and the engine is not running.
2. When the engine is started, the ” CHECK” engine warning light should go off.
   If the light remains on, the diagnosis system has detected a malfunction or abnormality in the system.

DIAGNOSTIC TROUBLE CODES OUTPUT (Normal mode)

To obtain an output of diagnostic trouble codes, proceed as follows:

1. Initial conditions
(a) Battery voltage 11 V or more
(b) Throttle valve fully closed (throttle position sensor: IDL points closed)
(c) Transmission in neutral range
(d) Accessories switched OFF
(e) Engine at normal operating temperature
2. Turn the ignition switch ON. DO not start the engine.

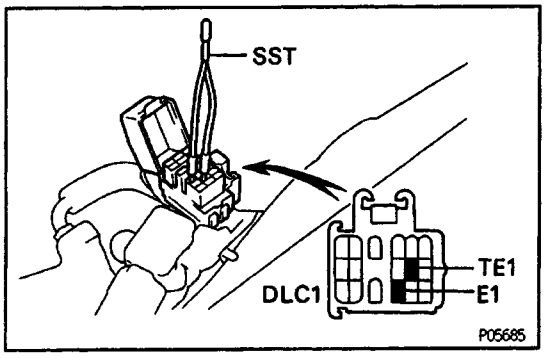

3. Using SST, connect terminals TE1 and E1 of the data link connector 1.
SST 09843–18020

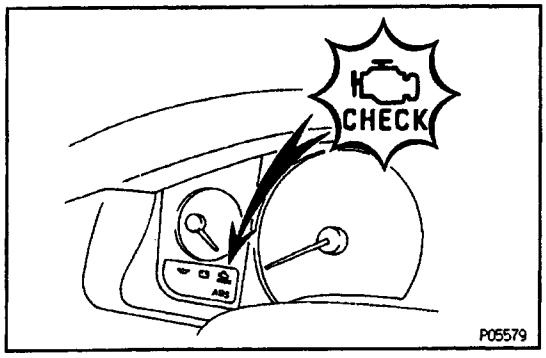

4. Read the diagnostic trouble code as indicated by the number of flashes of the ”CHECK” engine warning light.

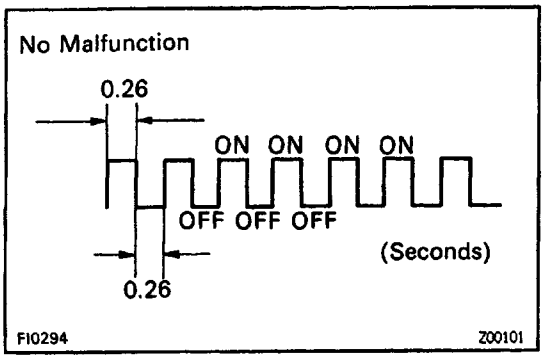

Diagnostic Trouble Codes (See page **EG1–288**)
(a) Normal System Operation (no malfunction)

- The light will alternately blink ON and OFF at 0.26–second intervals.

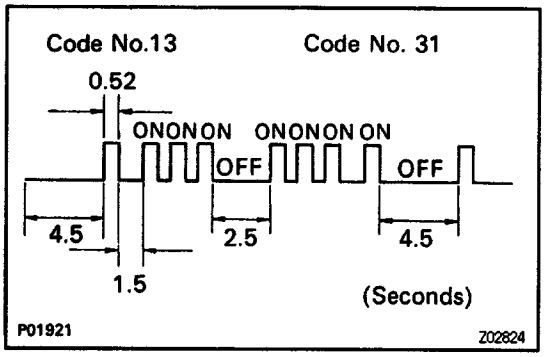

(b) Malfunction Code Indication

- In the event of a malfunction, the light will blink every 0.52–seconds. The first number of blinks will equal the first digit of a 2–digit diagnostic trouble code and, after a 1.5–second pause, the 2nd number of blinks will equal the 2nd. If there are two or more codes, there will be a 2.5–second pause between each code.

- After all the codes have been output, there will be a 4.5 second pause and they will all be repeated as long the terminals TE 1 and E 1 of the data link connector 1 are connected.

HINT: In the event of a number of trouble codes, indication will begin from the smaller value and con–tinue to the larger.

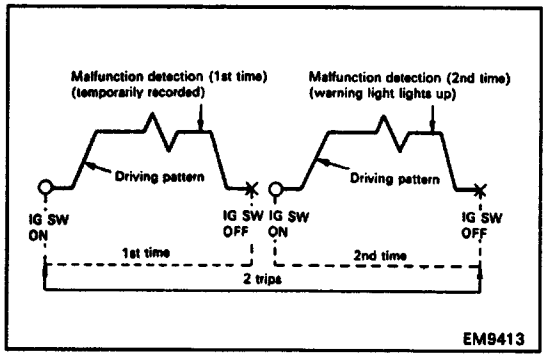

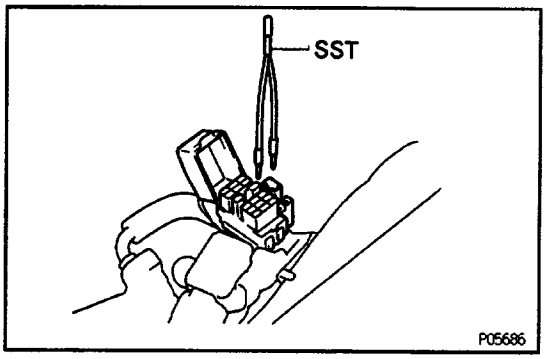

(c) (2 trip detection logic)

Diagnostic trouble codes 25, 26 and 71 use ”2 trip detection logic”. With this logic, when a malfunction is first detected, the malfunction is temporarily stored in the PCME memory. If the same case is detected again during the second drive test, this second detection causes the ”CHECK” engine warning light to light up. The 2 trip repeats the same mode a 2nd time. (How–ever, the ignition switch must be turned OFF between the 1 st time and 2nd time.) In the Test Mode, the ”CHECK” engine warning light lights up the 1 st time a malfunction is detected.

5. After the diagnosis check, remove SST.
   SST 09843–18020

(Test mode)

HINT:

- Compared to the normal mode, the test mode has high sensing ability to detect malfunctions.
- It can also detect malfunctions in the starter signal circuit and air conditioner signal.
- Furthermore, the same diagnostic items which are detected in the normal mode can also be detected in the test mode.

To obtain an output of diagnostic trouble codes, proceed as follows:

1. Initial conditions

(a) Battery voltage 11 volts or more

(b) Throttle valve fully closed (throttle position sensor IDL points closed)

(c) Transmission in neutral range

(d) Accessories switched OFF

2. First, using SST, connect terminals TE2 and E1 of the data link connector 1.
SST 09843–18020

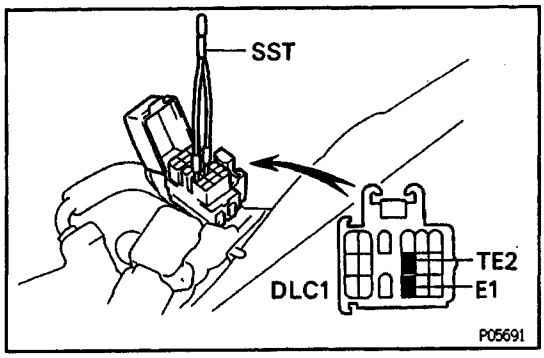

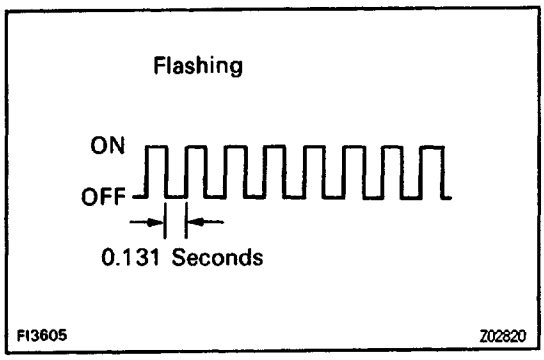

3. Turn the ignition switch ON.
HINT: To confirm that the test mode is operating, check that the "CHECK" engine warning light flashes when the ignition switch is turned ON.
4. Start the engine and drive the vehicle at a speed of 10 km/h (6 mph) or higher.
5. Simulate the conditions of the malfunction described by the customer.

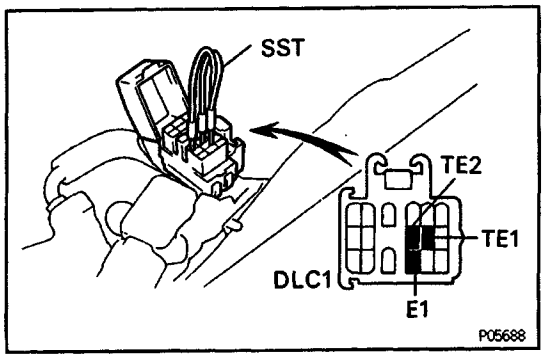

6. Using SST, connect terminals TE1 and E1 of the data link connector 1.
SST 09843–18020
7. Read the diagnostic trouble code as indicated by the number of flashes of the "CHECK" engine warning light. (See page EG1–286)

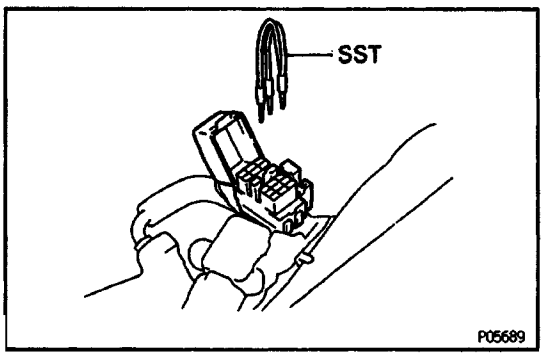

8. After the diagnosis check, remove SST.
   SST 09843–18020
   HINT:
   - The test mode will not start if terminals TE2 and E1 are connected after the ignition switch is turned on.
   - The starter signal and vehicle speed signal will be diagnosed by the PCME as malfunctions, and code Nos. 42, and 43 will be output, if the oper–ation in step 4 is not performed.
   - When the air conditioner is on or when the ac–celerator pedal is depressed, code ’51” (Switch condition signal) is output, but this is not abnor–mal.

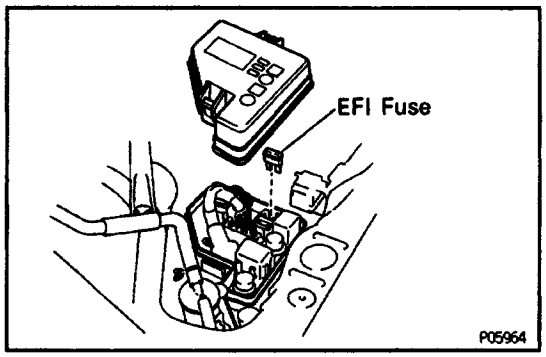

EGGJE–02

DIAGNOSTIC TROUBLE CODE CANCELLATION

1. After repair of the trouble area, the diagnostic troble code retained in memory by the PCME must be can–celled out by removing the EFI fuse (15 A) for 10 seconds or more, depending on ambient temperature (the lower the temperature, the longer the fuse must be left out) with the ignition switch OFF.
   HINT:
   - Cancellation can also be done by removing the battery negative (–) terminal, but in this case, other memory systems (clock, etc.) will also cancelled out.
   - If the diagnostic trouble code is not cancelled out, it will be retained by the PCME and appear along with a new code in the event of future trouble.
   - If it is necessary to work on engine components requiring removal of the battery terminal, a check must first be made to see if a diagnostic trouble code has been recorded.
2. After cancellation, perform road test of the vehicle to check that a normal code is now read on the ”CHECK” engine warning light.
   If the same diagnostic trouble code appears, it indi–cates that the trouble area has not been repaired thoroughly.

DIAGNOSIS INDICATION

E0QJF–02

1. When 2 or more codes are indicated, the lowest number (code) will appear first.
2. All detected diagnostic trouble codes, except code Nos. 43, 51 and 53 will be retained in memory by the PCM E from the time of detection until cancelled out.
3. Once malfunction is cleared, the ”CHECK” engine warning light on the combination meter will go off but the diagnostic trouble code(s) remains stored in PCME memory (except for code Nos. 43, 51 and 53).

5Q0J6–02

DIAGNOSTIC TROUBLE CODES

HINT:

- If a malfunction is detected during the diagnostic trouble code check, refer to the circuit indicated in the table, and turn to the corresponding page,
- Your readings may vary from the parameters listed in the table, depending on the instruments used.

Code No.	Number of blinks "CHECK" Engine Warning Light	System	*1 "CHECK" Engine Warning Light		Diagnosis	Trouble Area	*2 Memory	See Page
			Normal Mode	Test Mode				
—	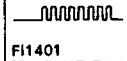 FI1401	Normal	—	—	No trouble code is recorded.	—	—	—
12	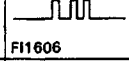 FI1606	RPM Signal	ON	N.A.	• No G1, G2 or NE signal is input to the PCM E for 2 secs. or more after STA turns ON. • Open in G – circuit	• Open or short in NE, G circuit • Distributor • Open or short in STA circuit • PCME	O	IG–4 EG1–304
13	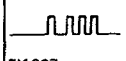 FI1607	RPM Signal	ON	ON	NE signal is not input to PCME for 0.05 sec. or more when engine speed is 1,000 rpm or more.	• Open or short in NE circuit • Distributor • PCME	O	IG–4
14	 FI1608	Ignition Signal	ON	N.A.	IG signal from igniter is not input to PCME for 8 consecutive ignition.	• Open or short in IG F or IGT circuit from igniter to ECU • Igniter • PCME	O	EG1–305
21	FI1609	Oxygen Sensor Signal	ON	N.A.	Open or short in heater circuit of oxygen sensor for 0.5 sec. or more. (HT)	• Open or short in heater circuit of oxygen sensor • Oxygen sensor heater • PCME	O	EG1–403
				ON	At normal driving speed (below 60 mph and engine speed is above 1,900 rpm), amplitude of oxygen sensor signal (0X1) is reduced to between 0.35 – 0.70 V continuously for 60 secs. or more. *6 (2 trip detection logic) (Exc. Calif.)	• Open or short in oxygen sensor circuit • Oxygen sensor • Open or short in air flow sensor circuit • Air flow sensor • PCME		
22	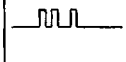 FI1610	Engine Coolant Temp. Sensor Signal	ON	ON	Open or short in engine coolant temp. sensor circuit for 0.5 sec. or more. (THW)	• Open or short in engine coolant temp. sensor circuit • Engine coolant temp. sensor • PCME	O	EG1–303
24	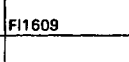 FI1611	Intake Air Temp. Sensor Signal	*3 ON	ON	Open or short in intake air temp. sensor circuit for 0.5 sec. or more. (THA)	• Open or short in intake air temp. sensor circuit • Intake air temp. sensor • PCME	O	EG1–302
25	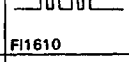 FI2562	Air–Fuel Radio Lean Mal–function	ON	ON	(1) Oxygen sensor output in less than 0.45 V for at least 90 secs. when oxygen sensor is warmed up (racing at 1,500 rpm). (only for code 25) (2) When the oxygen sensor signal oscillates beyond 0.45 V more than 10 times within a 4 sec. period at idle and at coolant temperature of 60°C (140°F) or above. (3) When the air–fuel compensation value fluctuates more than 20% from the PCM E set range within an 80 sec. period at coolant temperature of 60°C (140°F) or above. *6 (2 trip detection logic) (1) – (3)	• Engine ground bolt loose • Open in E1 circuit • Open in injector circuit • Fuel line pressure (Injector blockage, etc.) • Open or short in oxygen sensor circuit. • Oxygen sensor • Ignition system • Engine coolant temp. sensor • Air flow sensor (air intake) • PCM E	O	EG1–301 EG1–310
26	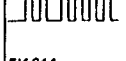 FI2563	Air–Fuel Ratio Rich Mal–function	*3 ON	*3 ON		• Engine ground bolt loose • Open in E1 circuit • Short in injector circuit • Fuel line pressure (Injector leakage, etc.) • Open or short in cold start injector circuit • Cold start injector • Open or short in oxygen sensor circuit • Oxygen sensor • Air flow sensor • Compression pressure • PCIME	O	

V00886

DIAGNOSTIC TROUBLE CODES (Cont'd)

Code No.	Number of blinks "CHECK" Engine Warning Light	System	*1 "CHECK" Engine Warning Light		Diagnosis	Trouble Area	*2 Memory	See Page
			Normal Mode	Test Mode				
31	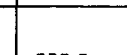 FI1612	Air Flow Sensor Signal	ON	ON	At idling. open or short detected continuously for 0.5 sec. or more in air flow sensor circuit. • Open – VC • Short – VC–E2	• Open or short in air flow sensor circuit • Air flow sensor • PCME	○	EG1–300
32	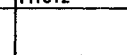 FI1613	Air Flow Sensor Signal	ON	ON	Open or short detected continuously for 0.5 sec. or more in air flow sensor circuit. • Open – E2 • Short – VS–VC		○	EG1–300
34	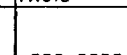 BE3933	Turbo–charging Pressure Signal	'3 ON	N.A.	Abnormal over charge during high load driving.	• Open or short in manifold absolute pressure sensor circuit • Manifold absolute pressure sensor • Turbocharger • PCME	○	—
35	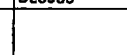 BE3933	Manifold Absolute Pressure sensor Signal	ON	ON	Open or short detected continuously for 0.5 sec. or more in manifold absolute pressure sensor signal circuit. (PIM)		○	EG1–308
41	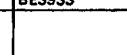 FI1614	Throttle Position Sensor Signal	'3 ON	ON	Open or short detected in throttle position sensor signal (VTA) for 0.5 sec. or more.	• Open or short in throttle position sensor circuit • Throttle position sensor • PCME	○	EG1–298
42	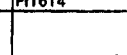 FI1615	Vehicle Speed Pulse Generator Signal	OFF	OFF	SPO signal is not input to the PCM E for at least 8 seconds during high load driving with engine speed between 2,500 rpm and 5,000 rpm.	• Open or short in vehicle speed pulse generator circuit • Vehicle speed pulse generator • PCM E	○	—
43	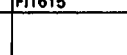 FI1616	Starter Signal	N.A.	OFF	Starter signal (STA) is not input to PCME until TE1 and E1 are connected.	• Open or short in starter signal circuit • Open or short in IG SW or MPI main relay circuit • PCME	X	EG1–304
52	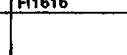 FI1618	Knock Sensor Signal	ON	N.A.	With engine speed between 2,520 rpm and 7,200 rpm, signal from knock sensor is not input to PCME for 2 revolutions. (KNK)	• Open or short in knock sensor circuit • Knock sensor (looseness, etc.) • PCME	○	—
53	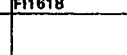 FI1619	Knock Control Signal	ON	N.A.	Engine speed is between 700 rpm and 7,200 rpm and PCME (for knock control) malfunction is detected.	• PCME	X	—
71	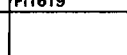 FI2622	EG R System Ma1–function	*3 ON	*3 ON	120 secs. from start of EGR operation, EGR gas temp. is less than 80'C (176'F) with coolant temp. 72'C (162'F) more. *6 (2 trip detection logic)	• Open in EGR function sensor circuit • Open in VSV circuit for EG R • EGR vacuum hose disconnected, valve stuck • Clogged in EGR gas passage • PCME	○	EG1–313
51	 FI1617	Switch Condition Signal	N.A.	OFF	Displayed when A/C is ON or IDL contact OFF with the check terminals E1 and TE1 connected.	• A/C switch circuit • Throttle position sensor IDL circuit. • Accelerator pedal, cable • PCME	X	EG1–309

REMARKS:
*1: 'ON" displayed in the diagnosis mode column indicates that the "CHECK" Engine Warning Light is lighted up when a malfunction is detected.
"OFF" indicates that the "CHECK" does not light up during malfunction diagnosis, even if a malfunction is detected.
"N.A." indicates that the item is not included in malfunction diagnosis.
*2: "○" in the memory column indicates that a diagnostic trouble code is recorded in the PCME memory when a malfunction occurs. "X" indicates that a diagnostic
code is not recorded in the PCME memory even it a malfunction occurs.
Accordingly, output of diagnostic results is performed with the ignition switch ON.
*3: The "CHECK" Engine Warning Light comes on if malfunction occurs only for California specifications.
*4: No. (2) and (3) in the diagnostic contents of codes No. 25 and 26 apply to California specification vehicles only, while (1) applies to all models.
*5: Code 71 is used only for California specifications.
*6: "2 trip detection logic" (See page EG1–282)

V00887

DIAGNOSTIC TROUBLE CODE DETECTION DRIVING PATTERN

Purpose of the driving pattern.

(a) To simulate diagnostic trouble code detecting condition after diagnostic trouble code is recorded.

(b) To check that the malfunction is corrected when the repair is completed, confirming that diagnostic trouble code is no longer detected.

Code No.	21	Oxygen Sensor Circuit

Malfunction: Deterioration of Oxygen Sensor

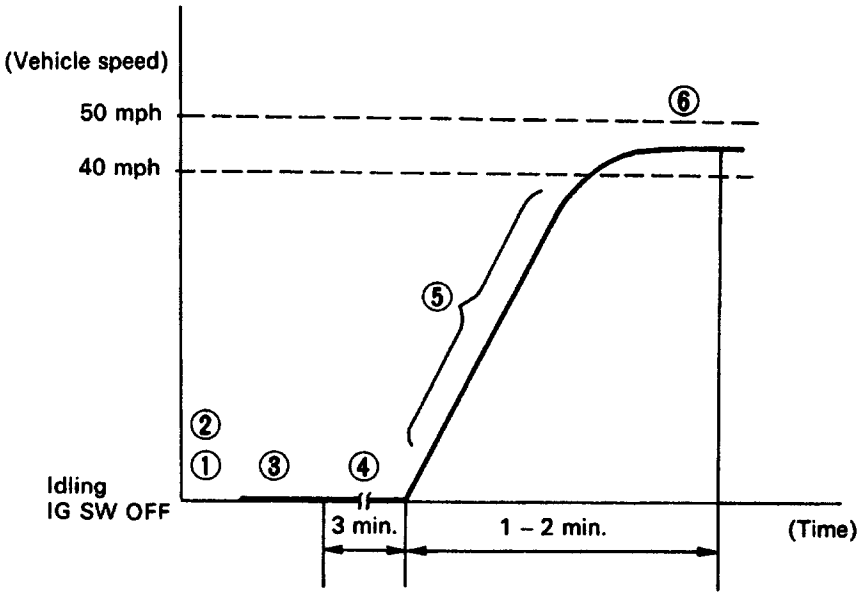

P01713

1 Disconnect the EFI fuse (115 A) for 10 seconds or more, with ignition switch OFF.
2 Initiate test mode: Connect terminals TE2 and E1 of DLC1 with ignition switch OFF.
3 Start the engine and warm the engine up with all accessory switches OFF.
4 After the engine is warmed up, let it idle for 3 minutes.
5 Accelerate gradually and maintain at approximately 1,500 rpm, or within the 1,300 to 1,700 rpm range. Turn the A/C on, and upshift appropriately. Shift carefully so that the engine speed would not fall below 1,200 rpm. Depress the accelerator pedal gradually and maintain a steady speed to avoid engine braking:
6 Maintain the vehicle speed at 40 – 50 mph.
Keep the vehicle running for 1 – 2 minutes after staring acceleration.

HINT: If any malfunction is detected, the ”CHECK” engine warning light will light up during step **6**.

NOTICE: If this procedure is not strictly followed, you cannot detect the malfunction.

V00888

DIAGNOSTIC TROUBLE CODE DETECTION DRIVING PATTERN (Cont'd)

Purpose of the driving pattern.

(a) To simulate diagnostic trouble code detecting condition after diagnostic trouble code is recorded.

(b) To check that the malfunction is corrected when the repair is completed, confirming that diagnostic trouble code is no longer detected.

Code No.	25	Air–Fuel Ratio Lean Malfunction
	26	Air–Fuel Ratio Rich Malfunction

Malfunction: Open or Short in Oxygen Sensor

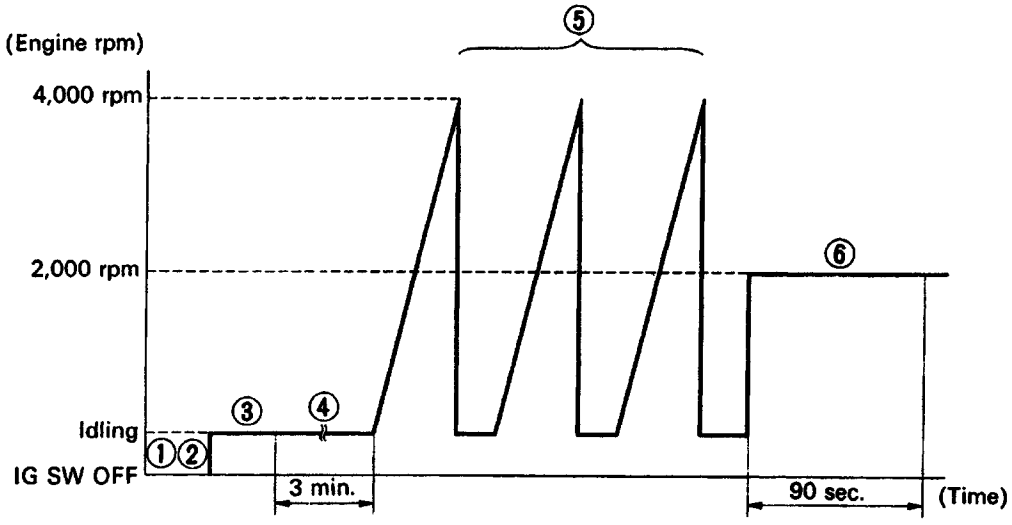

P02491

1 Disconnect the EFI fuse (15 A) for 10 seconds or more, with ignition switch OFF.
2 Initial test mode: Connect terminal TE2 and E1 of DLC1 with ignition switch OFF.
3 Start the engine and warm the engine up with all accessory switches OFF.
4 After the engine is warmed up, let it idle for 3 minutes.
5 Accelerate rapidly to 4,000 rpm three times.
6 Maintain at 2,000 rpm for 90 seconds.

HINT: If any malfunction is detected, the "CHECK" engine warning light will light up during step **6**.

NOTICE: If this procedure is not strictly followed, you cannot detect the malfunction.

V00889

DIAGNOSTIC TROUBLE CODE DETECTION DRIVING PATTERN (Cont'd)

Purpose of the driving pattern.

(a) To simulate diagnostic trouble code detecting condition after diagnostic trouble code is recorded.

(b) To check that the malfunction is corrected when the repair is completed, confirming that diagnostic trouble code is no longer detected.

Code No.		
	25	Air–Fuel Ratio Lean Malfunction (California)
	26	Air–Fuel Ratio Rich Malfunction (California)

Malfunction: Open or Short in Injector Leak, Blockage, Loose Engine Ground Bolt

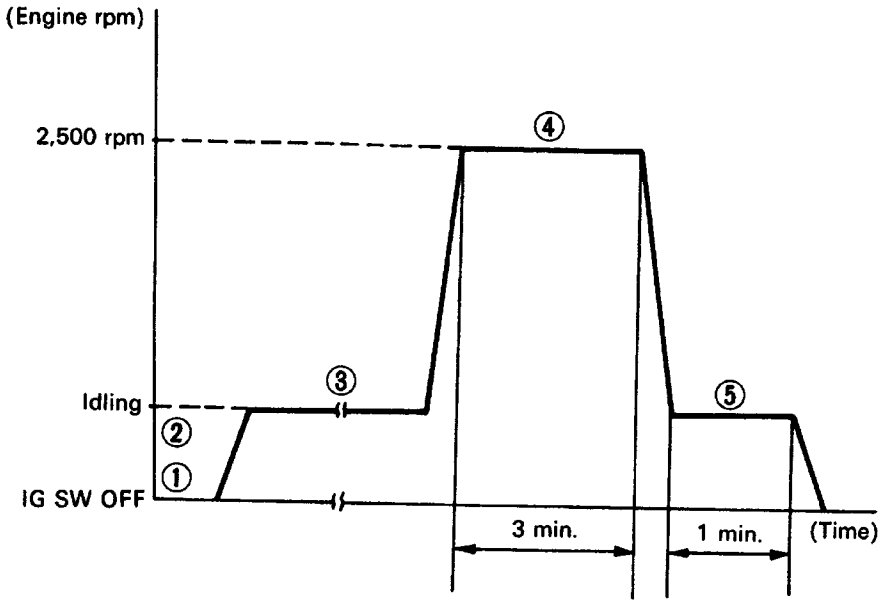

HINT: When start this test, coolant temp. is 35˚C (95˚F) or less and A/C switch OFF.
Before this test, check the feedback voltage for oxygen sensor.

1 Disconnect the EFI fuse (15 A) for 10 seconds or more, with ignition switch OFF.

2 Initiate test mode: Connect terminals TE2 and E1 of DLC1 with ignition switch OFF.

3 Start the engine and warm the engine up.

4 After the engine is warmed up, maintain at 2,500 rpm for 3 minutes.

5 Let it idle for 1 minute.

HINT: If any malfunction is detected, the "CHECK" engine warning light will light up during step **5**.

NOTICE: If this procedure is not strictly followed, you cannot detect the malfunction.

V00890

DIAGNOSTIC TROUBLE CODE DETECTION DRIVING PATTERN (Cont'd)

Purpose of the driving pattern,

(a) To simulate diagnostic trouble code detecting condition after diagnostic trouble code is recorded.

(b) To check that the malfunction is corrected when the repair is completed, confirming that diagnostic trouble code is no longer detected.

Code No.	71	EGR System Malfunction (California)

Malfunction: Short in VSV Circuit for EGR, Loose EGR Hose, Valve Stuck

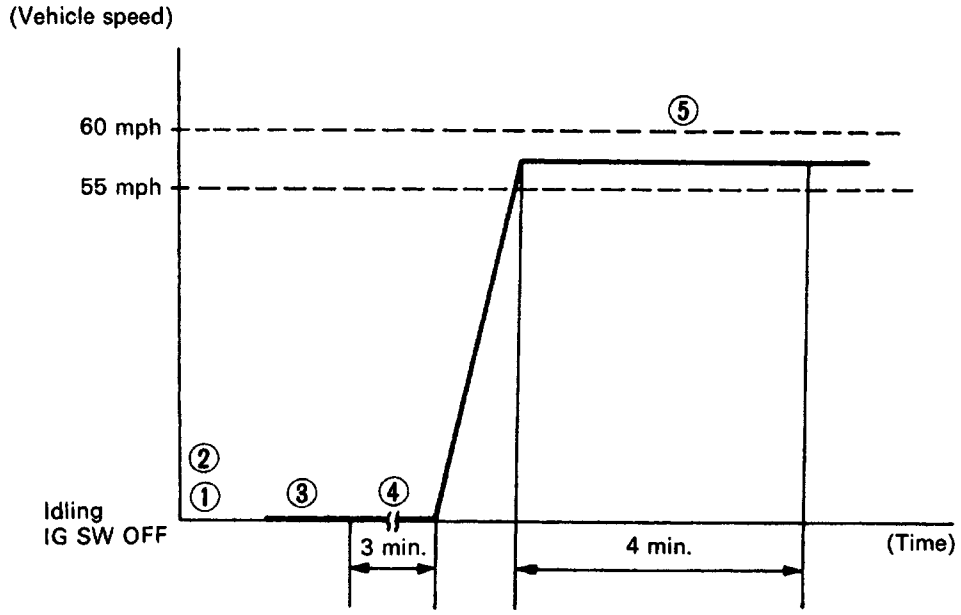

P01712

HINT: When start this test, coolant temp. is 35˚C (95˚F) or less and A/C switch OFF.

1 Disconnect the fuse EFI (15 A) for 10 seconds or more, with ignition switch OFF.

2 Initiate teat mode: Connect terminals TE2 and E1 of DLC1 with ignition switch OFF.

3 Start engine and warm engine up.

4 After engine is warmed up, let it idle for 2 minutes.

5 With the A/C switch OFF and transmission in 5th gear, drive at 55 – 00 mph for 4 minutes.

HINT: If any malfunction is detected, the "CHECK" engine warning light will light up during step **5**.

NOTICE: If this procedure is not strictly followed, you cannot detect the malfunction.

V00891

E0QJH–02

DIAGNOSIS CIRCUIT INSPECTION

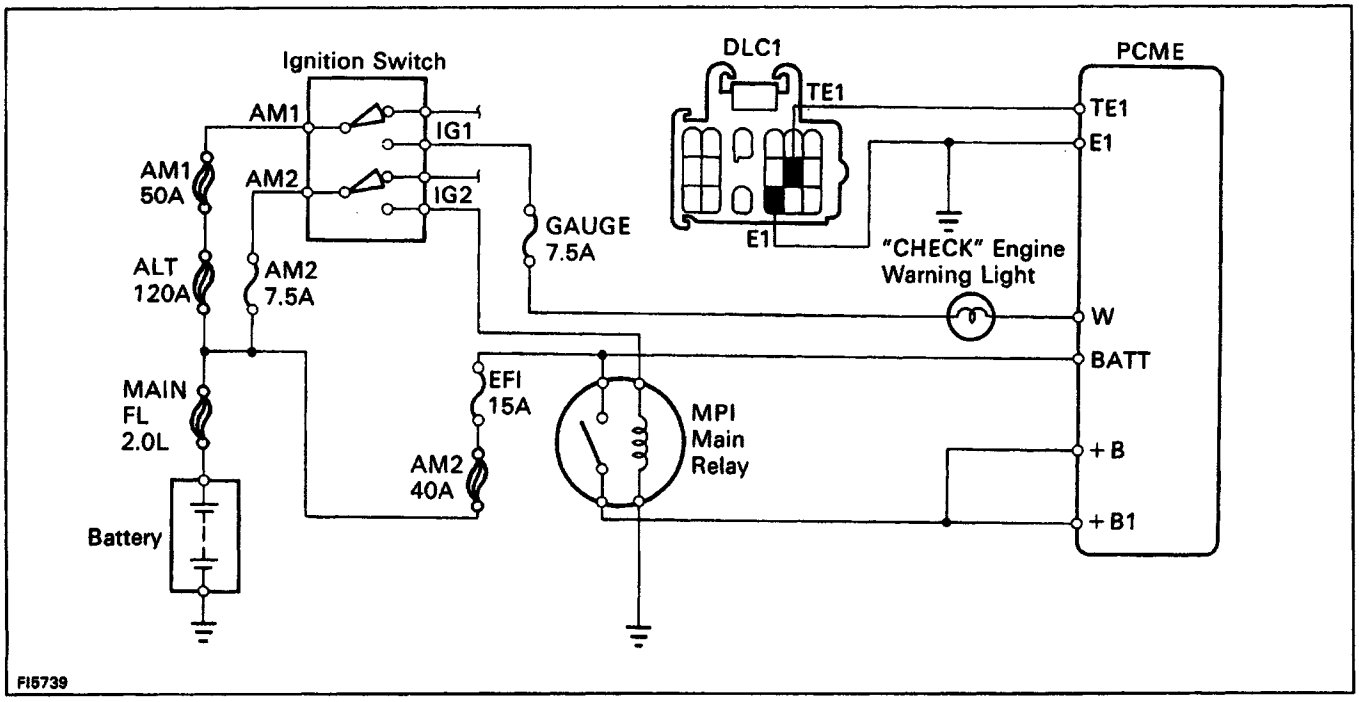

1.

Does "CHECK" engine warning light come on when ignition switch is at ON? — YES → System normal

NO

Does "CHECK" engine warning light come on when PCME terminal w is grounded to the body? — YES → Check wiring between PCM E terminal E1 and body ground. — OK → Try another PCME.

NO

BAD → Repair or replace.

Check bulb, fuse and wiring between PCM E and ignition switch.

BAD

Repair or replace.

2.

Does "CHECK" engine warning light go off when the engine is started? — YES → System normal

NO

Check wiring between PCM E and "CHECK" engine warning light. — BAD → Repair.

NO

Is there diagnostic code output when DLC1 terminals TO and E1 connected? — NO → Check wiring between PCME terminal TE1 and DLC1 terminal TE1, and PCME terminal E1 and DLC1 terminal E1.

YES ..

OK

Does "CHECK" engine warning light go off after repair according to malfunction code? — NO → Further repair required.

Try another PCM E.

YES

System 0 K → Cancel out diagnostic trouble code.

V00892

EGR FUNCTION SENSOR (Calif.)

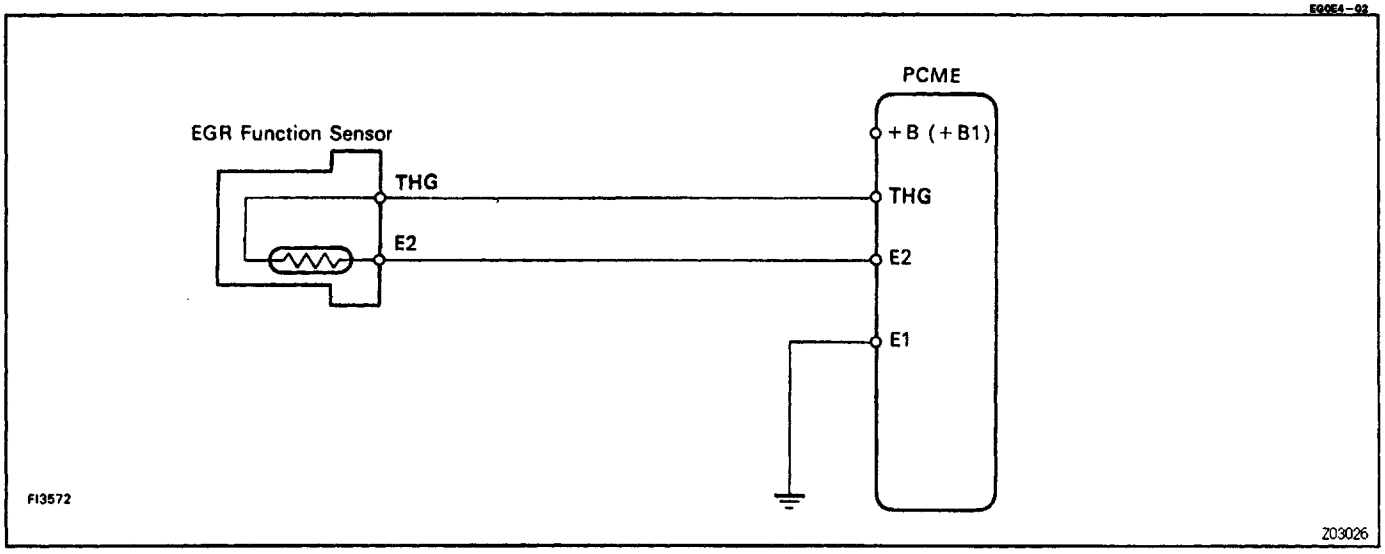

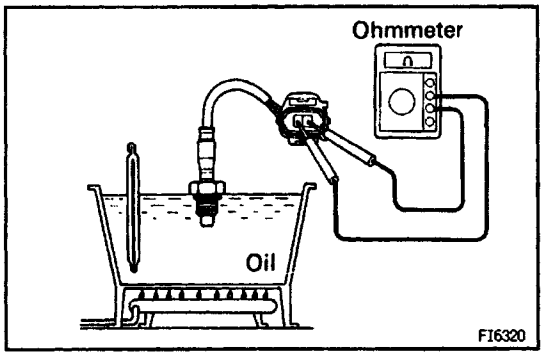

EGR FUNCTION SENSOR INSPECTION

1. REMOVE EGR FUNCTION SENSOR

2. INSPECT EGR FUNCTION SENSOR

Using an ohmmeter, measure the resistance between the terminals.

Resistance:

69 – 89 kΩ at 50° C (112° F)

11 – 15 kΩ at 1000C (2120F)

2 – 4 kΩ at 1500C (302”F)

If the resistance is not as specified, replace the sensor.

3. REINSTALL EGR FUNCTION SENSOR

ELECTRONIC PARTS LOCATION

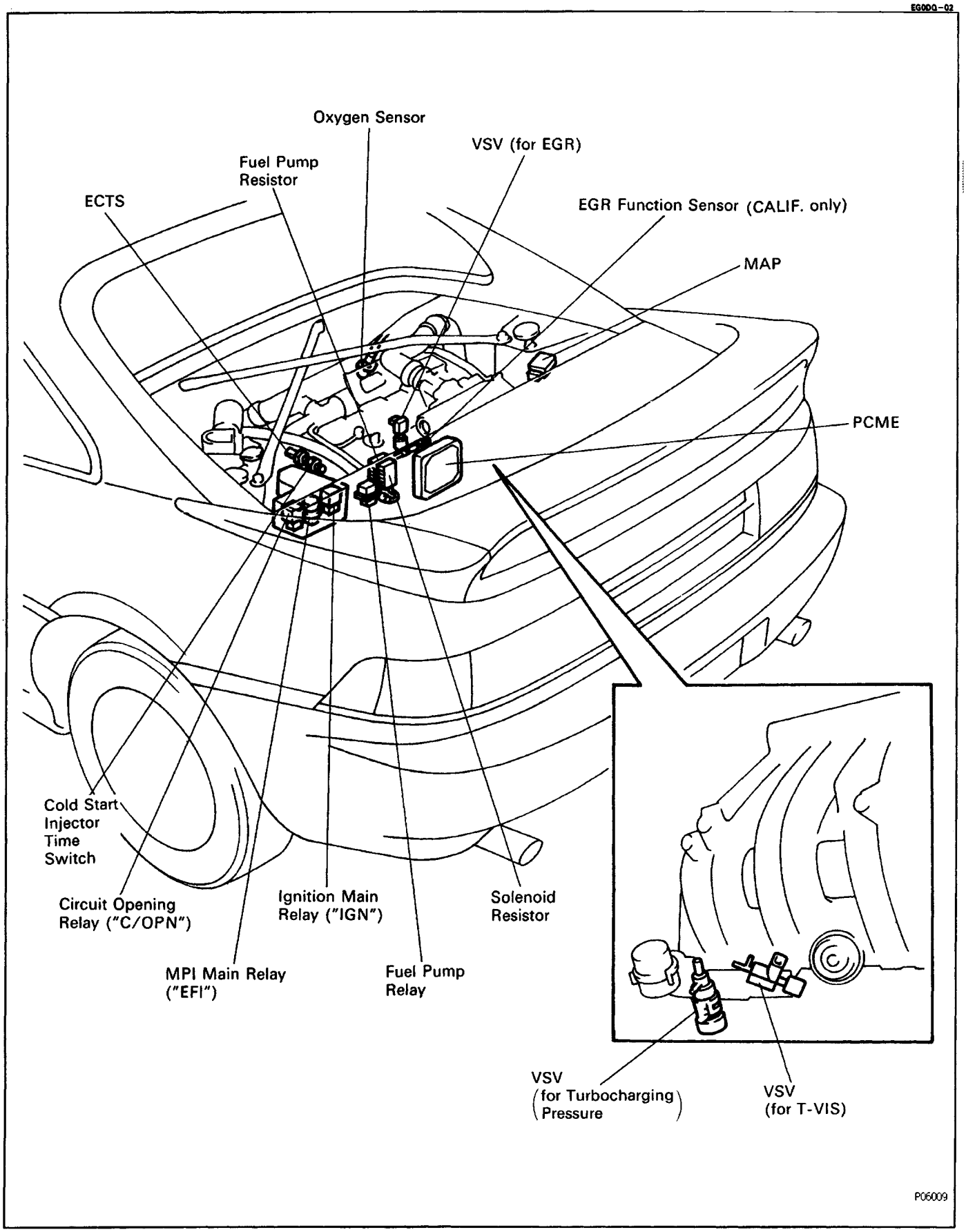

ENGINE COOLANT TEMPERATURE SENSOR (ECTS)

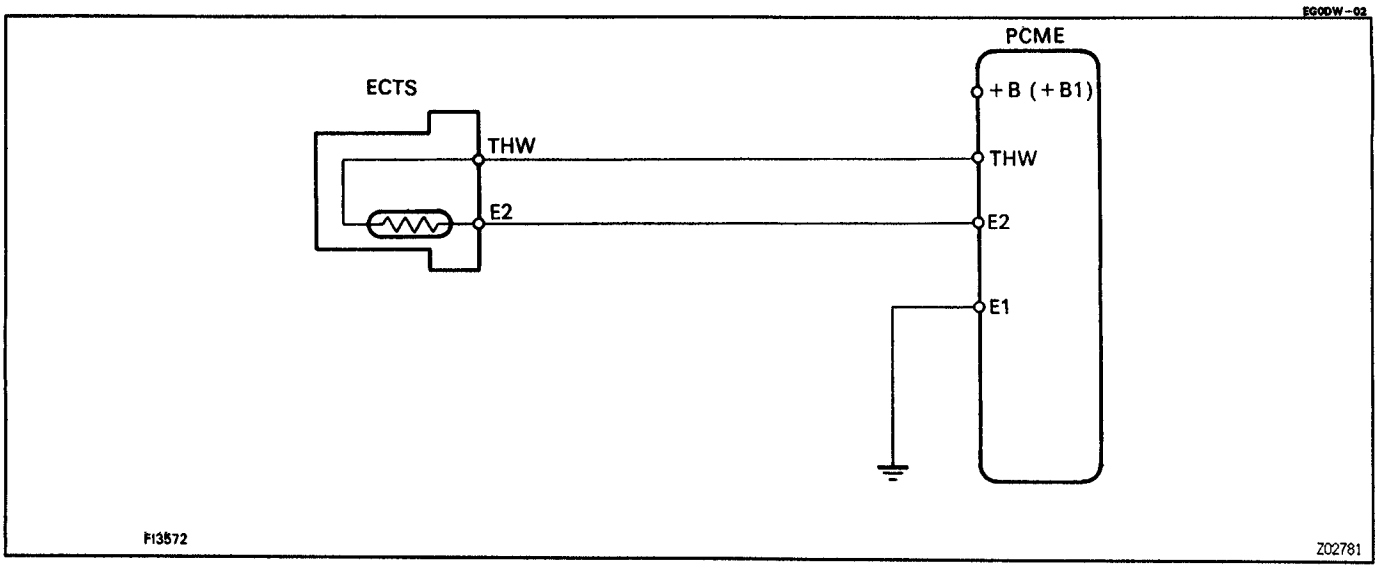

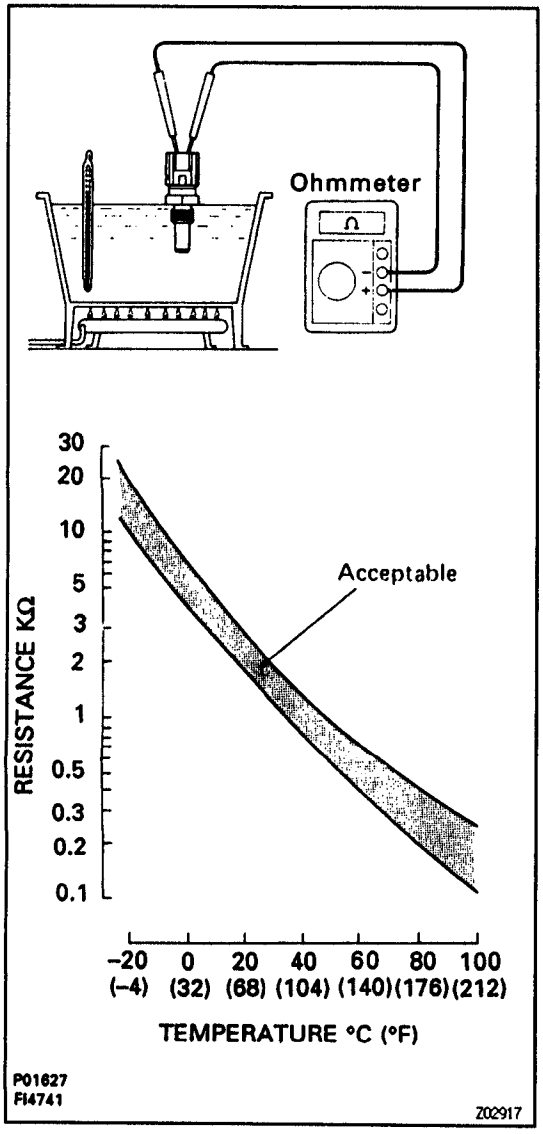

ENGINE COOLANT TEMPERATURE SENSOR (ECTS) INSPECTION

EG0DX–02

1. REMOVE ECTS

2. INSPECT ECTS

Using an ohmmeter, measure the resistance between the terminals.

Resistance:

Refer to the chart graph

If the resistance is not as specified, replace the ECTS.

3. REINSTALL ECTS

FUEL CUT RPM

EG0EC – 02

FUEL CUT PRM INSPECTION

1. WARM UP ENGINE

Allow the engine to warm up to normal operating temperature.

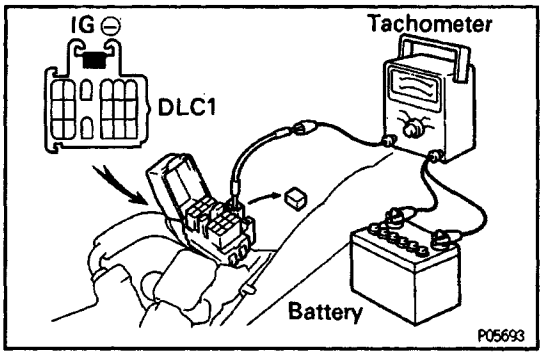

2. CONNECT TACHOMETER TO ENGINE

Connect the test probe of a tachometer to terminal IG – of the data link connector 1.

NOTICE:

- Never allow the tachometer terminal to touch ground as it could result in damage to the igniter and/or ignition coil.
- As some tachometers are not compatible with this ignition system, we recommend that you confirm the compatibility of your before use.

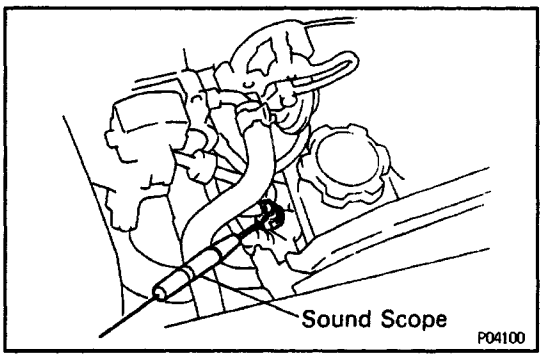

3. INSPECT FUEL CUT PRM

(a) Increase the engine speed to at least 2,500 rpm.

(b) Using a sound scope, check for injector operating noise.

(c) Check that when the throttle lever is released, injector operation noise stops momentarily and then resumes.

HINT: Measure with the A/C OFF.

Fuel return rpm:

1,600 rpm

4. DISCONNECT TACHOMETER

FUEL PUMP RELAY AND RESISTOR

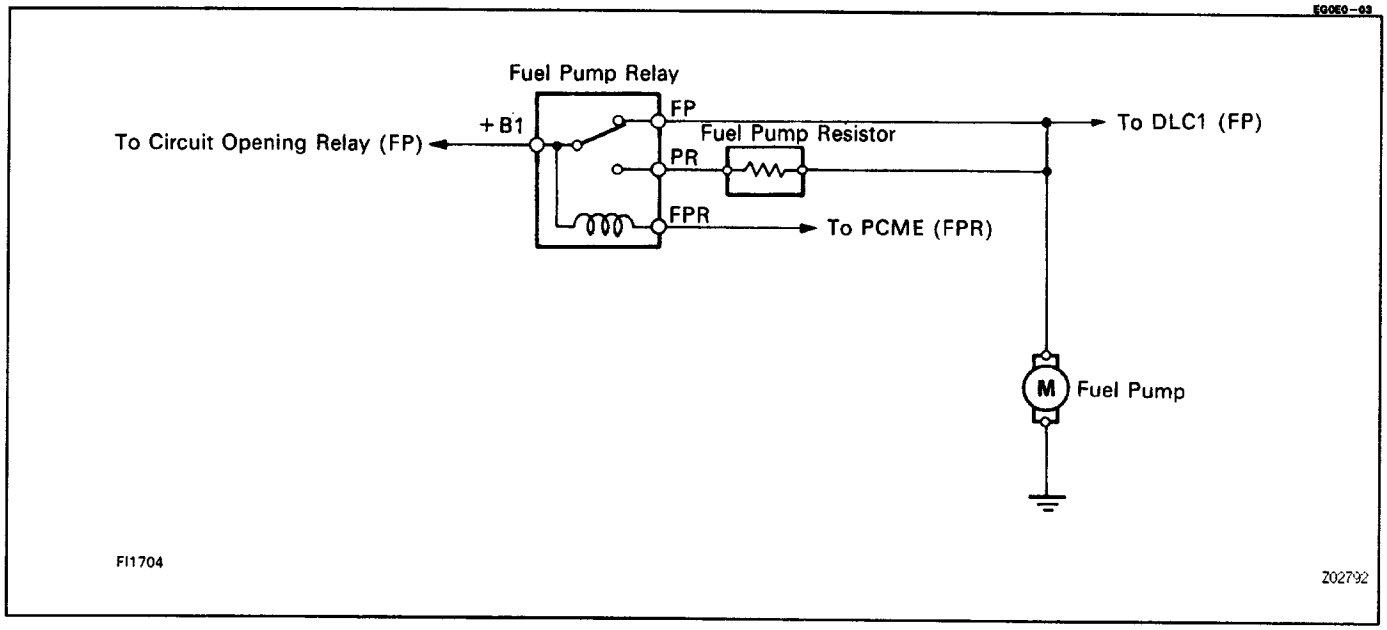

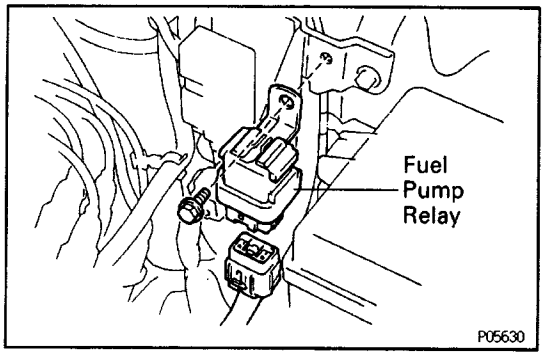

FUEL PUMP RELAY INSPECTION

EG0E1–02

1. REMOVE FUEL PUMP RELAY

(a) Disconnect the fuel pump relay connector.

(b) Remove the bolt and fuel pump relay.

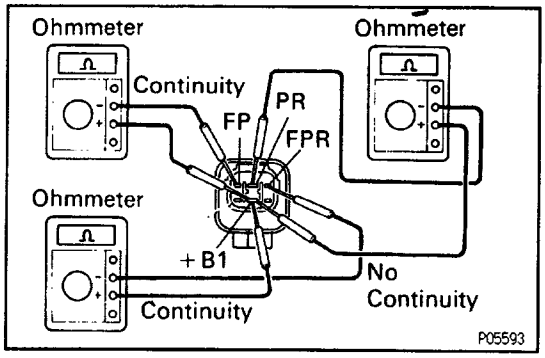

2. INSPECT FUEL PUMP RELAY

A. Inspect relay continuity

(a) Using an ohmmeter, check that there is continuity between terminals +1311 and FPR.

(b) Check that there is continuity between terminals +B1 and FP.

(c) Check that there is no continuity between terminals + 131 and PR.

(f continuity is not as specified, replace the relay.

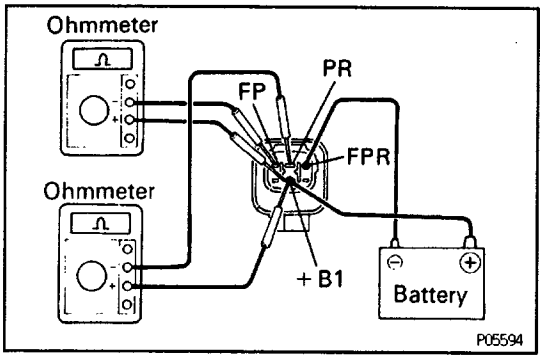

B. Inspect relay operation

(a) Apply battery voltage across terminals +B1 and FPR.

(b) Using an ohmmeter, check that there is no continuity between the +131 and FP.

(c) Check that there is continuity between terminals +B1 and PR.

If operation is not as specified, replace the relay.

3. REINSTALL FUEL PUMP RELAY

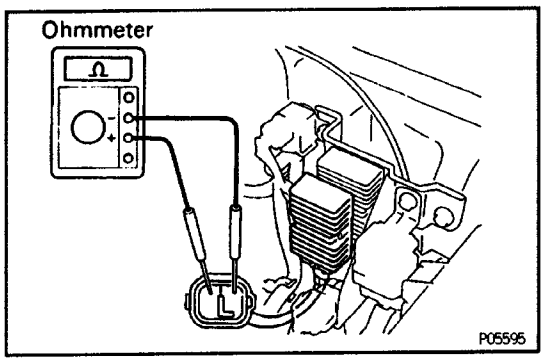

FUEL PUMP RESISTOR INSPECTION

EG0YX–01

1. DISCONNECT FUEL PUMP RESISTOR CONNECTOR

2. INSPECT FUEL PUMP RESISTOR

Using an ohmmeter, measure the resistance between the terminal.

Resistance (Cold):

Approx. 0.73 0

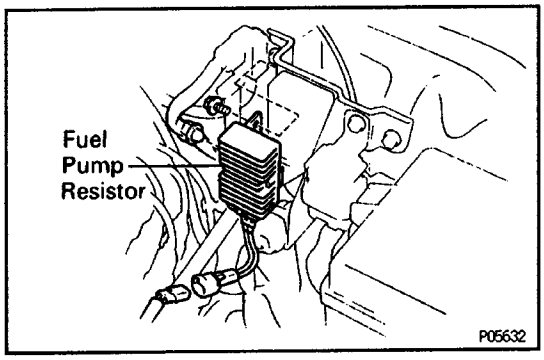

If the resistance is not as specified, replace the re–sistor.

3. RECONNECT FUEL PUMP RESISTOR CONNECTOR

FUEL PRESSURE REGULATOR

EG0Y8–01

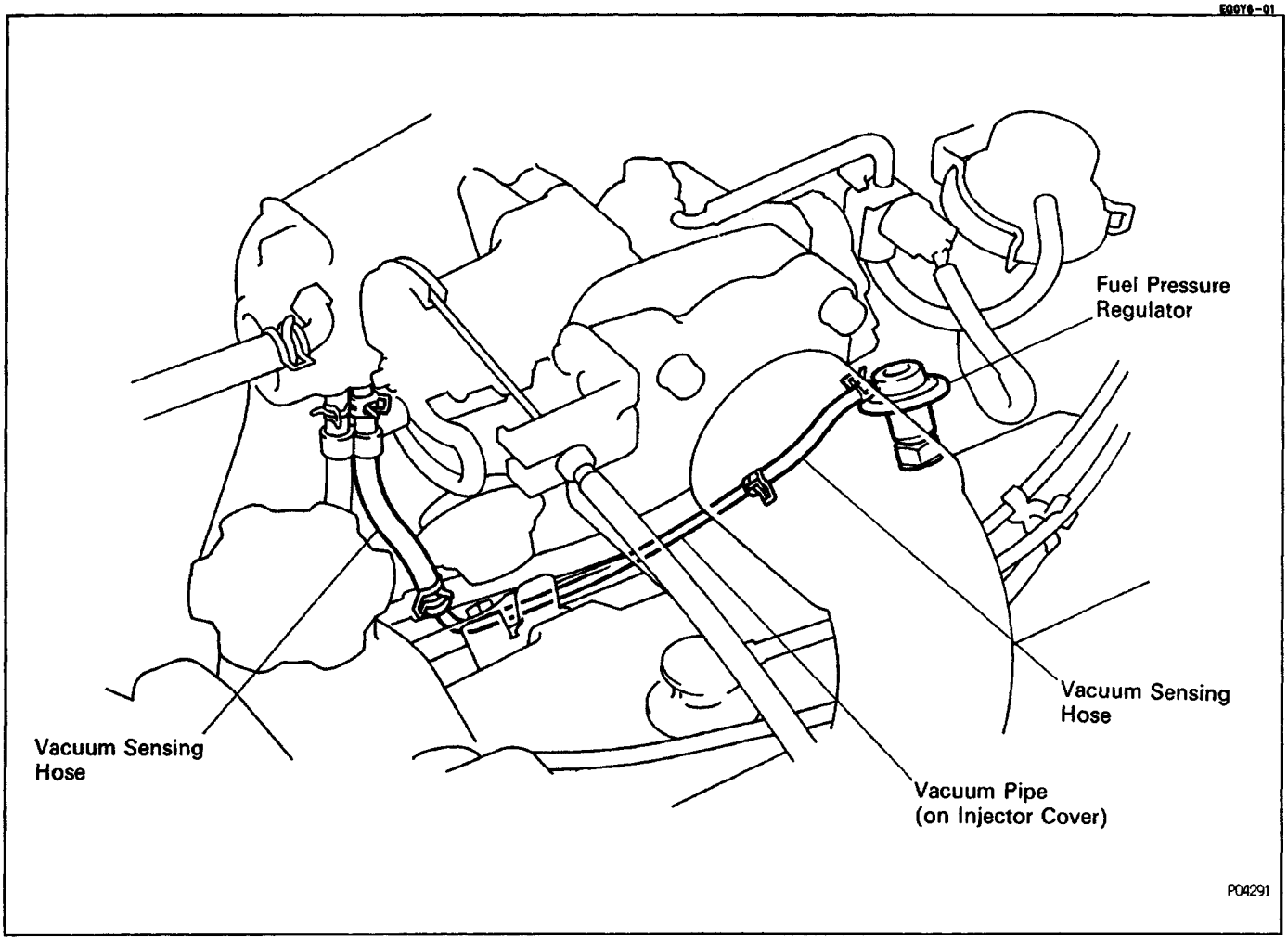

EG0D5–02

ON–VEHICLE INSPECTION

INSPECT FUEL PRESSURE

(See On–Vehicle Inspection in Fuel Pump)

COMPONENTS FOR REMOVAL AND INSTALLATION

EGQY7–01

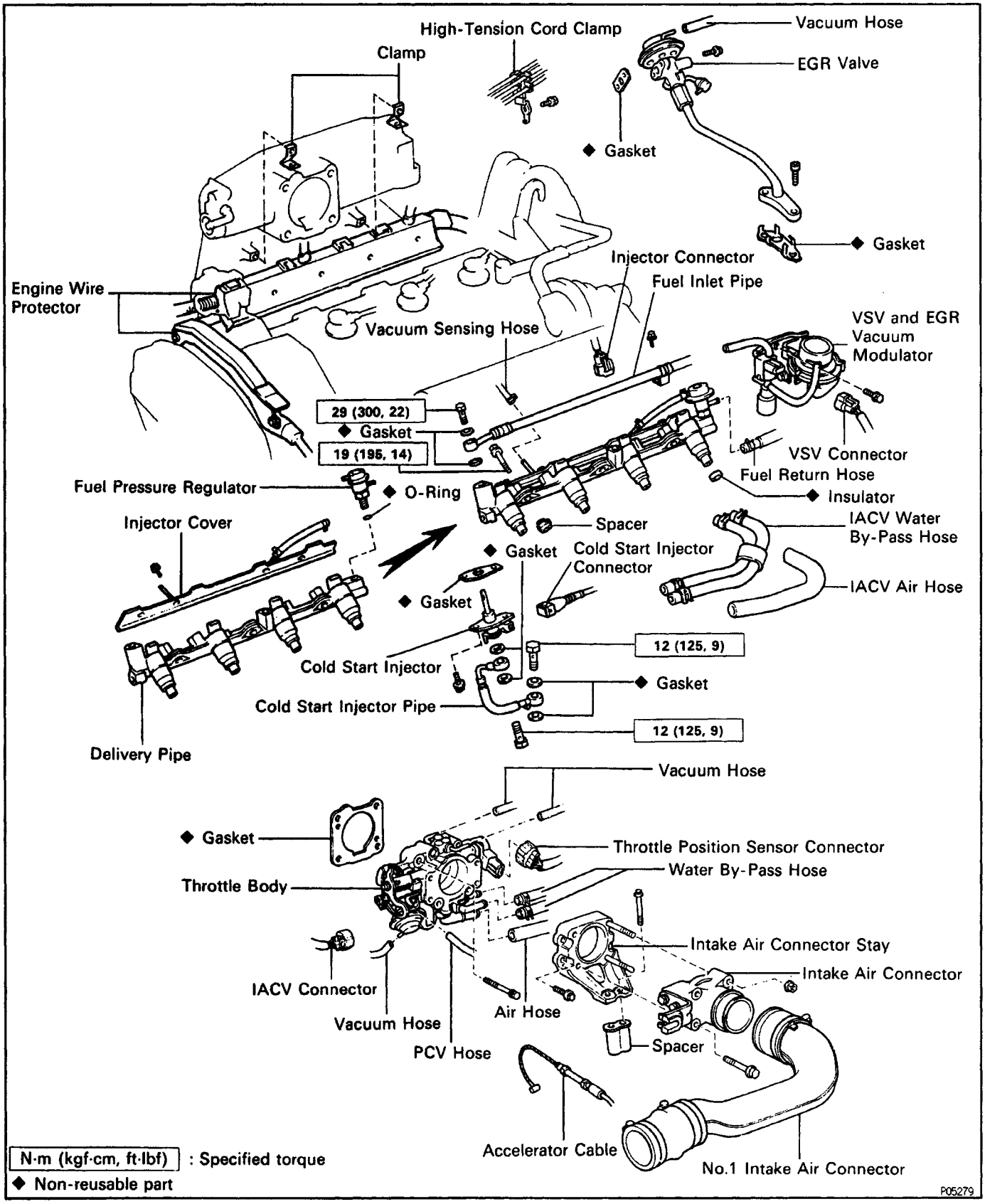

FUEL PRESSURE REGULATOR REMOVAL

(See Components for Removal and Installation)

1. REMOVE THROTTLE BODY

(See Throttle Body Removal)

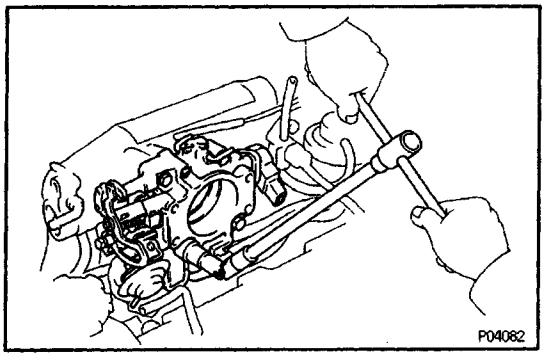

2. REMOVE DELIVERY PIPE ASSEMBLY

(See step 2 to 9 in Injectors Removal)

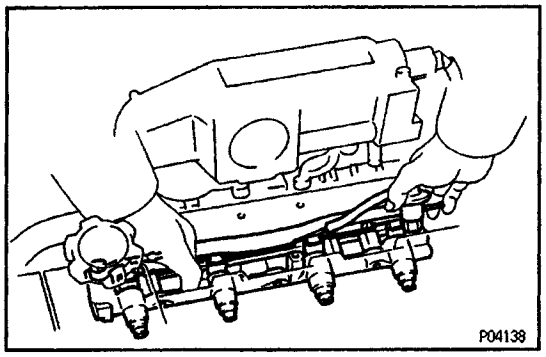

3. REMOVE INJECTOR COVER FROM DELIVERY PIPE

(a) Disconnect the vacuum sensing hose from the fuel pressure regulator.

(b) Remove the four bolts and injector cover.

(c) Remove the four insulators from the injectors.

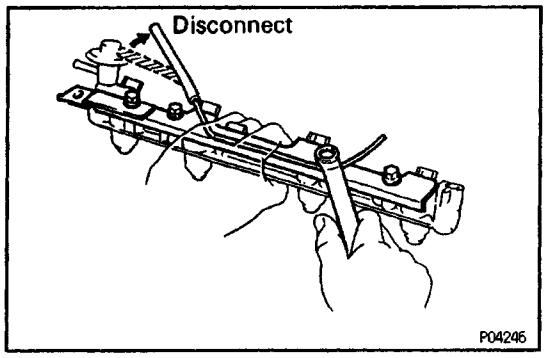

4. REMOVE FUEL PRESSURE REGULATOR

(a) Loosen the the lock nut, and remove the pressure regulator.

(b) Remove the O–ring from the pressure regulator.

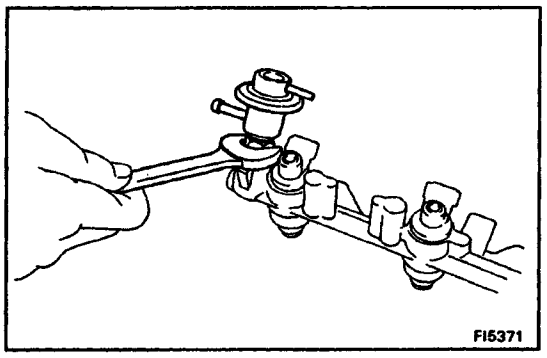

EG0Y8–01

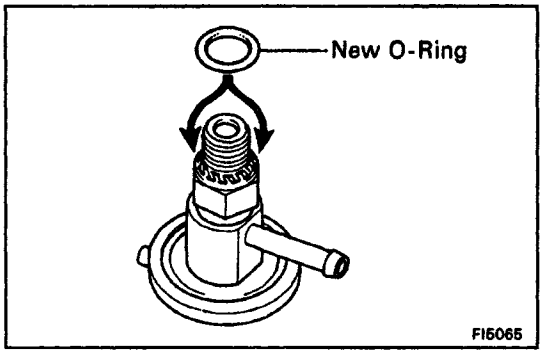

FUEL PRESSURE REGULATOR
INSTALLATION
(See Components for Removal and Installation)
1. INSTALL FUEL PRESSURE REGULATOR
(a) Fully loosen the lock nut on the pressure regulator.
(b) Apply a light coat of gasoline to a new O–ring, and install it to the pressure regulator.

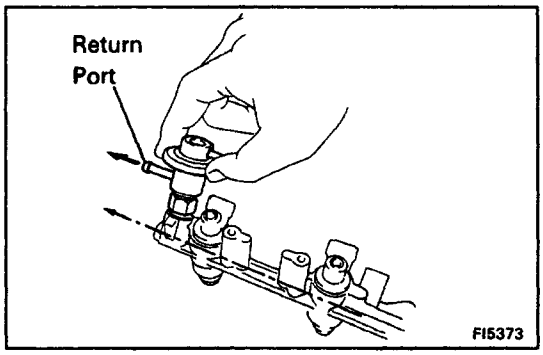

(c) Completely thrust the pressure regulator into the delivery pipe by hand.
(d) Turn the pressure regulator counterclockwise until the fuel return port faces in the direction indicated in the illustration.

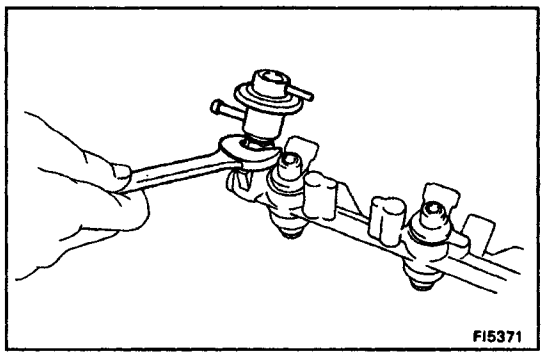

(e) Tighten the lock nut.
Torque: 29 N–m (300 kgf–cm, 22 ft–lbf)

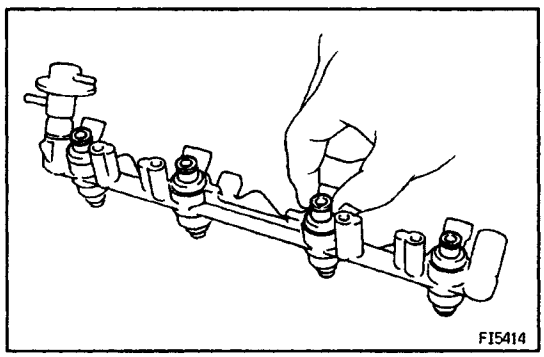

2. INSTALL INJECTOR COVER TO DELIVERY PIPE
(a) Install a new insulator to each injector.

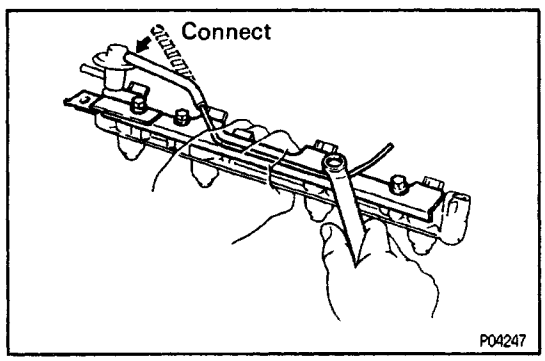

(b) Install the injector cover with the four bolts.
Torque: 7.8 N–m (80 kgf–cm, 69 in.–lbf)
(c) Connect the vacuum sensing hose to the fuel pressure regulator.

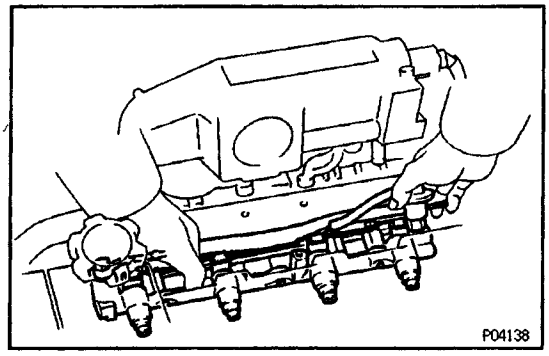

3. INSTALL DELIVERY PIPE ASSEMBLY
(See steps 1 to 8 in Injector Installation)

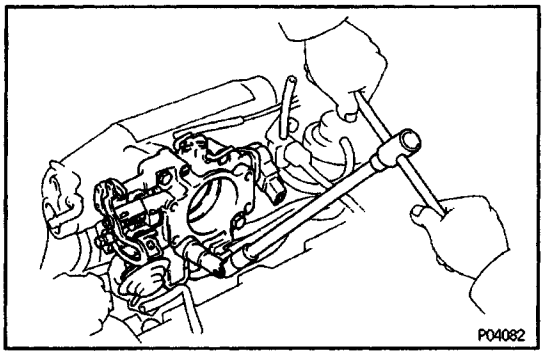

4. INSTALL THROTTLE BODY
(See Throttle Body Installation)

5. START ENGINE AND CHECK FOR FUEL LEAKS

FUEL PUMP

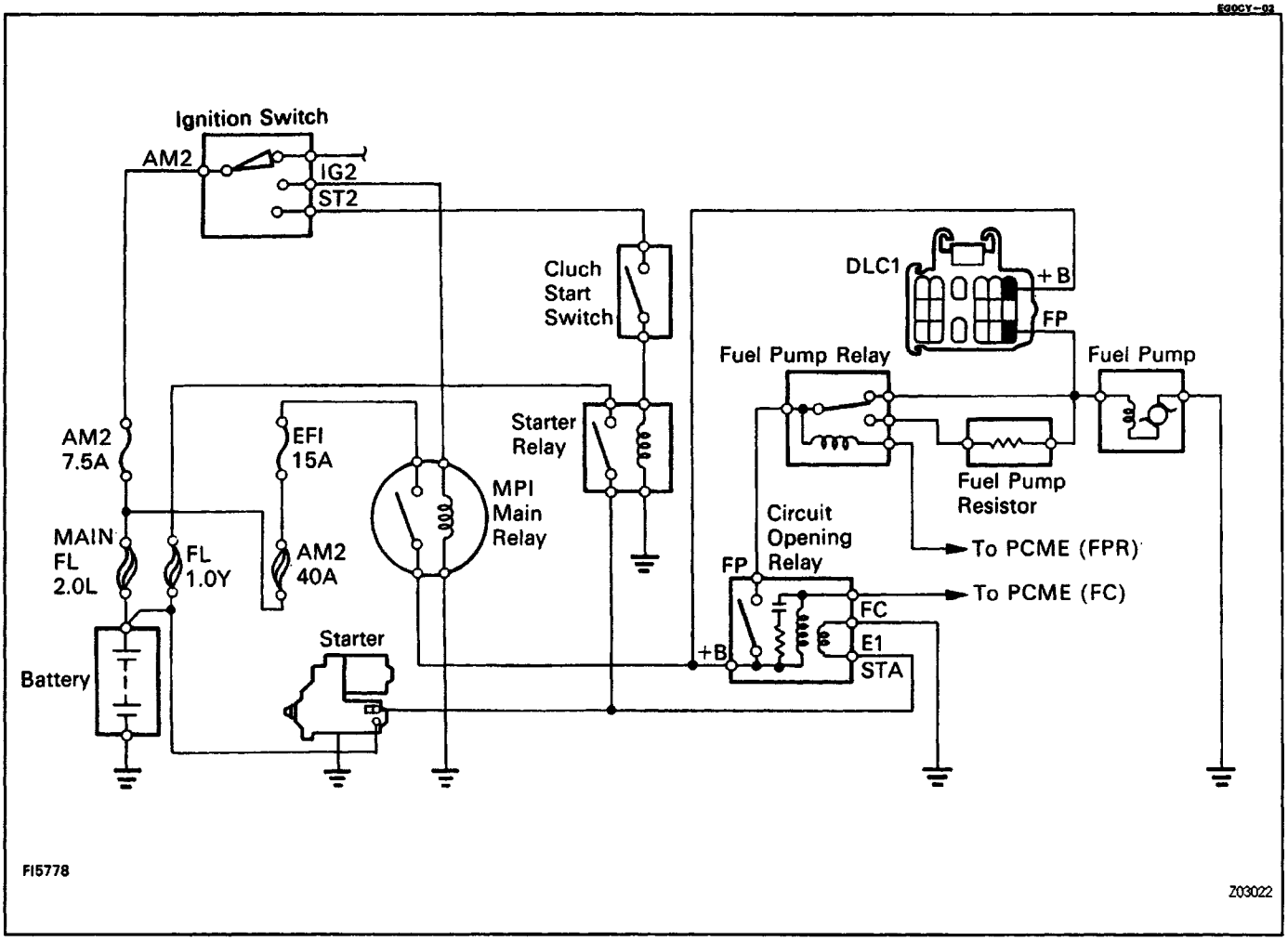

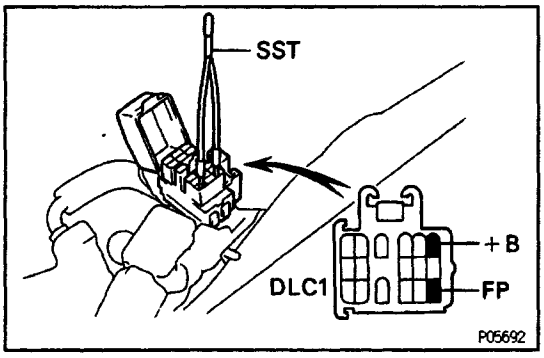

EG0XW–01

ON–VEHICLE INSPECTION

1. CHECK FUEL PUMP OPERATION

(a) Using SST, connect terminals +B and FP of the data link connector 1.
SST 09843–18020

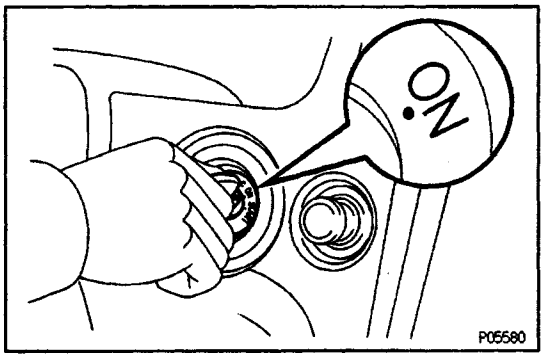

(b) Turn the ignition switch ON.

NOTICE: Do not start the engine.

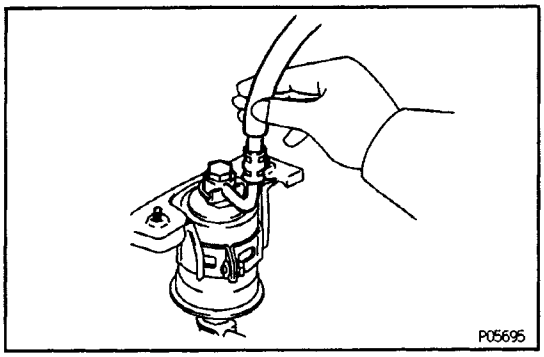

(c) Check that there is pressure in the hose from the fuel filter.

HINT: At this time, you will hear fuel return noise.

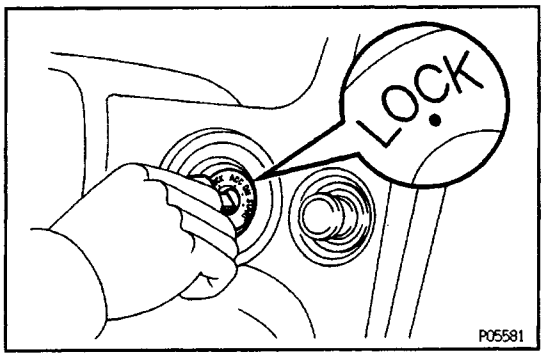

(d) Turn the ignition switch OFF.

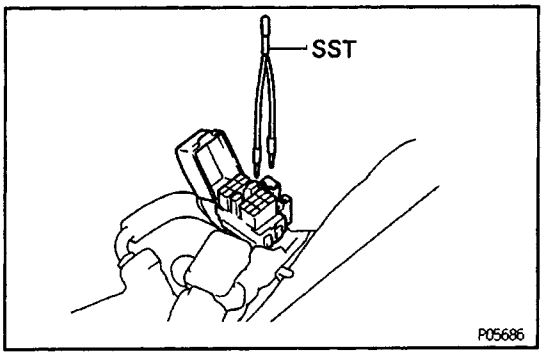

(e) Remove the SST from the data link connector 1.
SST 09843–18020

If there is no pressure, check the following parts:

- Fusible links (2.OL, 1.OY)
- H –fuse (AM2 40A)
- Fuses (EFI 15A, AM2 7.5A)
- MPI main relay
- Fuel pump
- Fuel pump relay
- Fuel pump resistor
- Wiring connections

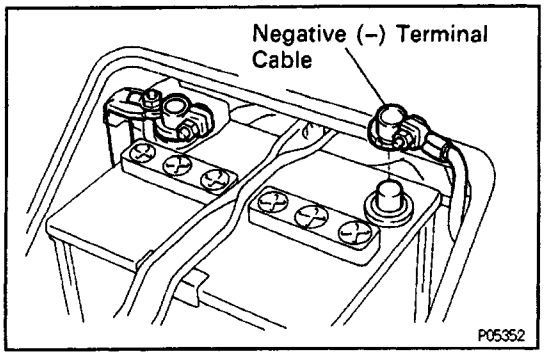

2. CHECK FUEL PRESSURE

(a) Check that the battery voltages is above 12 volts.

(b) Disconnect the cable from the negative (–) terminal of the battery.

CAUTION: Turn the ignition switch to ”LOCK”. Disconnect the negative terminal from the battery. Wait at least 20 seconds before proceeding with work.

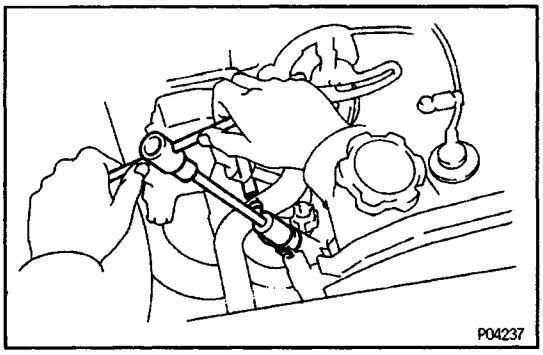

(c) Remove the union bolt and two gaskets, and disconnect the fuel inlet hose from the delivery pipe.

HINT:
Put a suitable container or shop towel under the delivery pipe.

- Slowly loosen the union bolt.

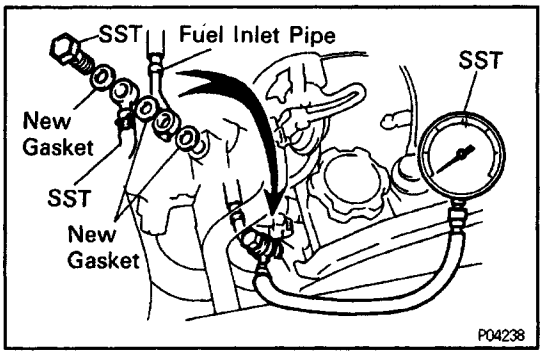

(d) Install the fuel inlet hose and SST (pressure gauge) to the delivery pipe with three new gaskets and SST (union bolt).
SST 09268–45012

Torque: 29 N–m (300 kgf–cm, 22 ft–lbf)

(e) Wipe off any splattered gasoline.

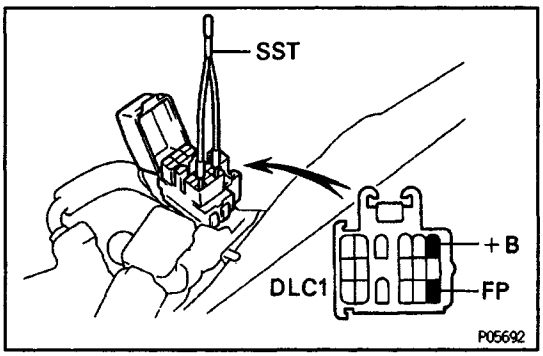

(f) Using SST, connect terminals +B and FP of the data link connector 1.
SST 09843–18020

(g) Reconnect the battery negative (–) cable.

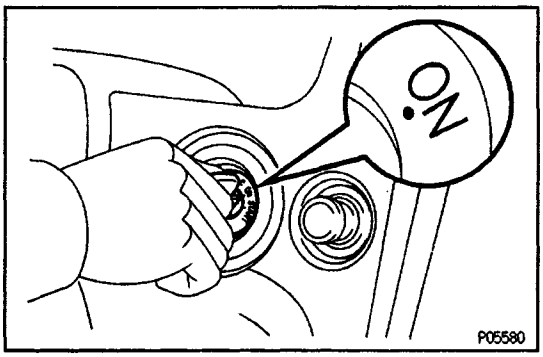

(h) Turn the ignition switch ON.

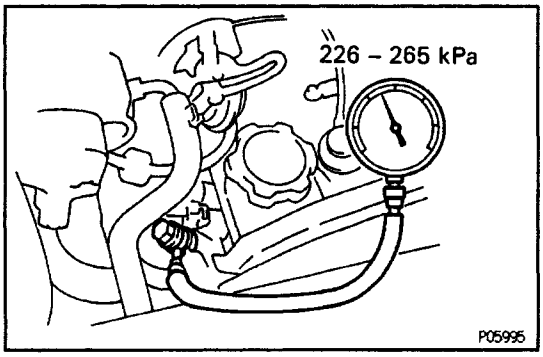

(i) Measure the fuel pressure.

Fuel pressure:

226 – 265 kPa (2.3 – 2.7 kgf/cm^2, 33 – 38 psi)

If pressure is high, replace the fuel pressure regulator.
If pressure is low, check the following parts:

- Fuel hoses and connections
- Fuel pump
- Fuel filter
- Fuel pressure regulator

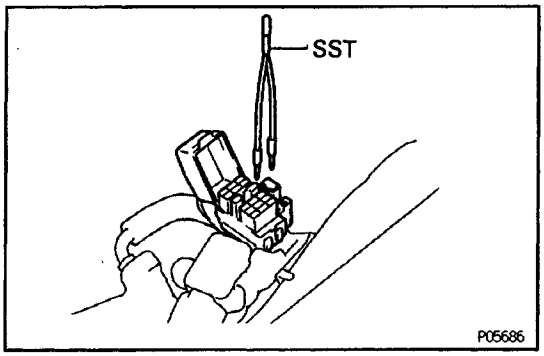

(j) Remove the SST from the data link connector 1.
SST 09483–18020

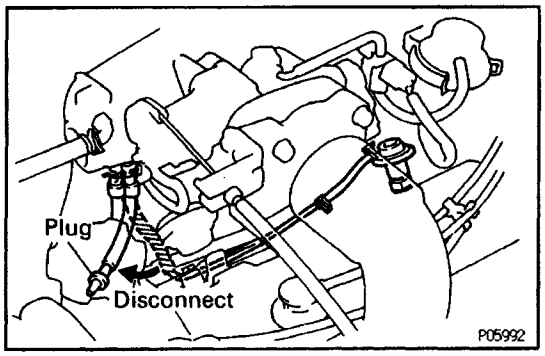

(k) Start the engine.
(l) Disconnect the vacuum sensing hose from the air intake chamber and plug the air intake chamber outlet.

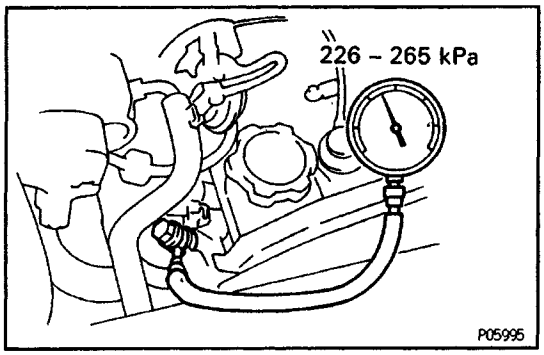

(m) Measure the fuel pressure at idle.
Fuel pressure:
226 – 265 kPa (2.3 – 2.7 kgf/cm^2, 33 – 38 psi)

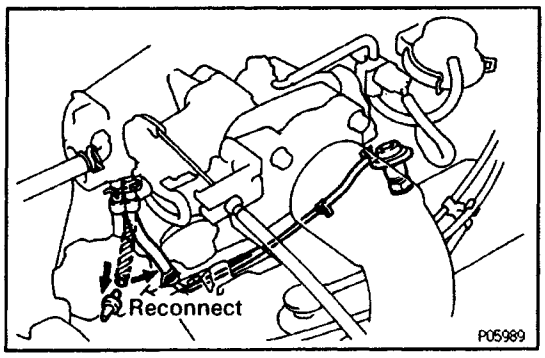

(n) Reconnect the vacuum sensing hose to the air intake chamber.

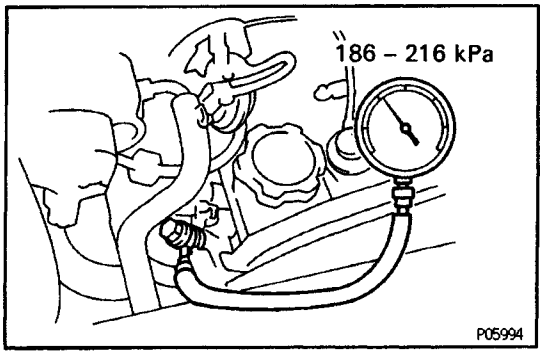

(o) Measure the fuel pressure at idle.
Fuel pressure:
186 – 216 kPa (1.9 – 2.2 kgf/cm^2, 27 – 31 psi)
If pressure is not as specified, check the vacuum sensing hose and fuel pressure regulator.

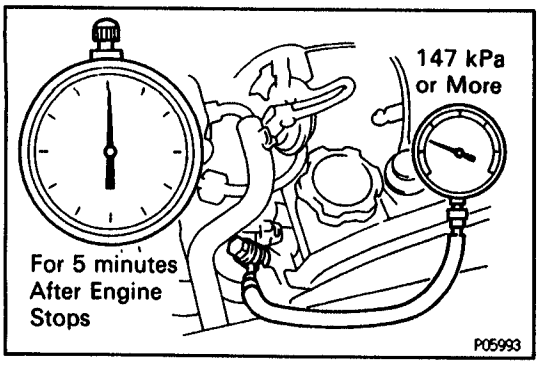

(P) Stop the engine.
(q) Check that the fuel pressure remains as specified for 5 minutes after the engine stops.
Fuel pressure:
147 kPa (1.5 kgf/cm^2, 21 psi) or more
If pressure is not as specified, check the fuel pump, pressure regulator and/or injector.

(r) After checking fuel pressure, disconnect the battery negative (–) cable and carefully remove the SST to prevent gasoline from splashing.
SST 09268–45012

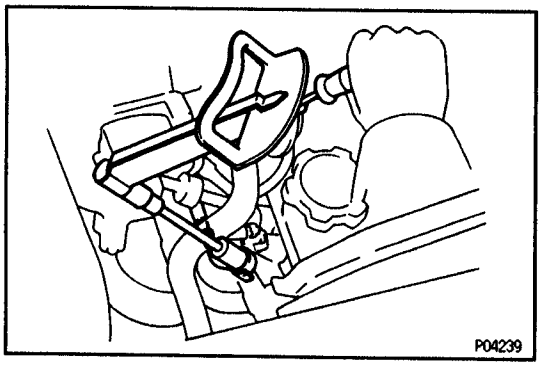

(s) Connect the fuel inlet hose to the delivery pipe with two new gaskets and the union bolt.
Torque: 29 N–m (300 kgf–cm, 22 ft–lbf)

(t) Reconnect the cable to the negative (–) terminal of the battery.
(u) Check for fuel leaks.

COMPONENTS FOR REMOVAL AND INSTALLATION

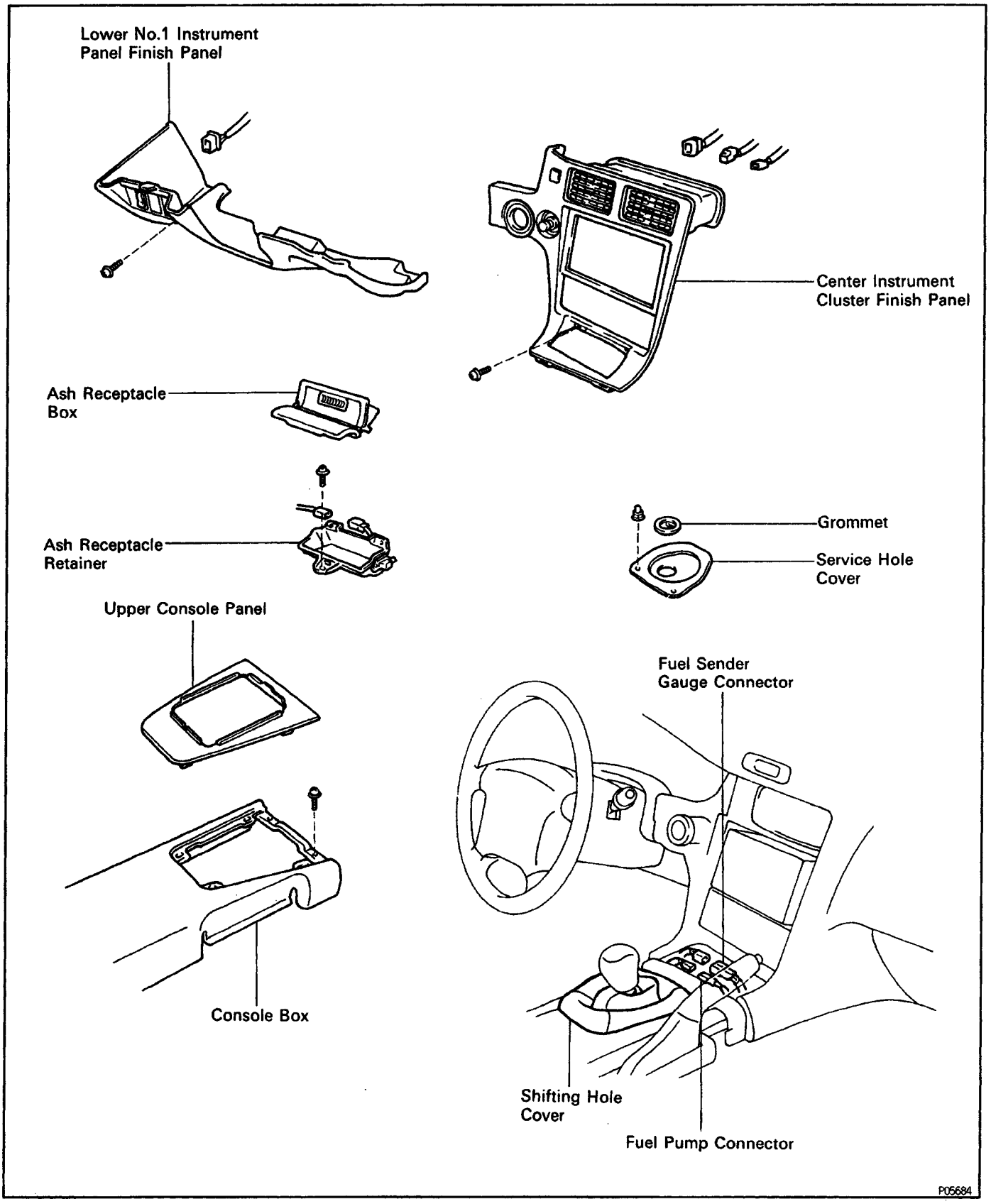

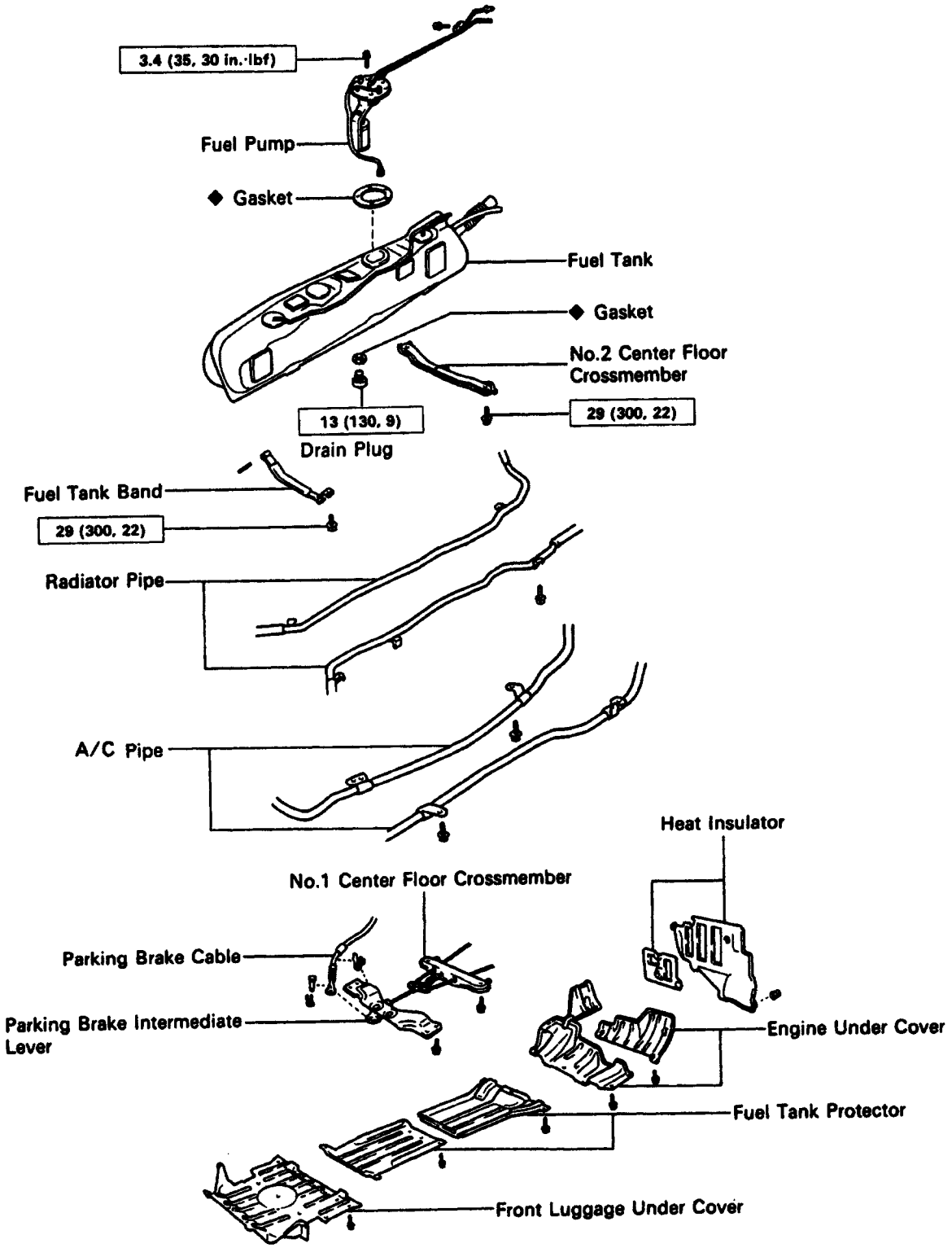

N·m (kgf·cm, ft·lbf) : Specified torque
◆ Non-reusable part

FI5801

EG0XY–01

FUEL PUMP INSPECTION

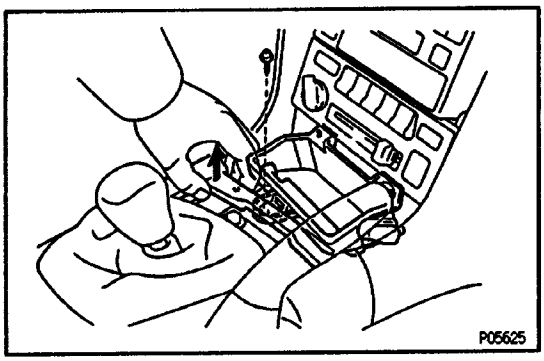

(See Components for Removal and Installation)

1. REMOVE ASH RECEPTACLE RETAINER

(See steps 1 and 2 in Fuel Pump Removal)

2. DISCONNECT FUEL PUMP CONNECTOR

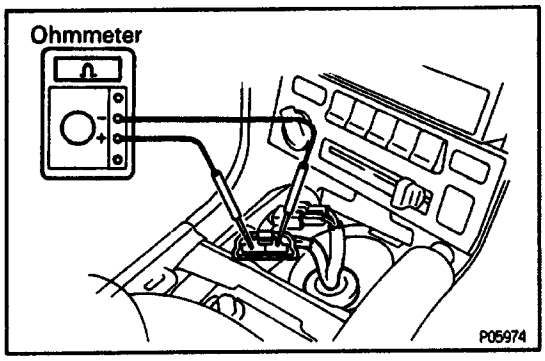

3. INSPECT FUEL PUMP

A. Inspect fuel pump resistance

Using an ohmmeter, measure the resistance between the terminals.

Resistance (Cold):

0.2–3.00

If the resistance is not as specified, replace the fuel pump.

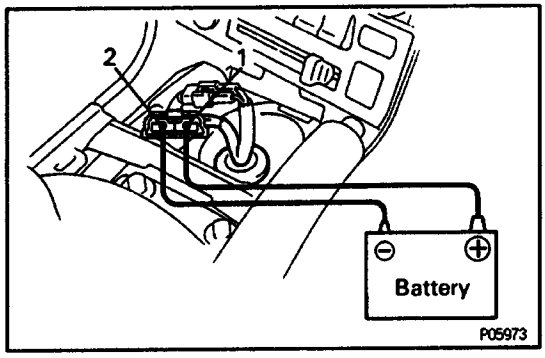

B. Inspect fuel pump operation

Connect the positive (+) lead from the battery to terminal 1 of the connector, and the negative (–) lead to terminal

2. Check that the fuel pump operates.

If operation is not as specified, replace the fuel pump.

NOTICE:

- **These tests must be performed quickly (within 10 seconds) to prevent the coil from burning out.**
- **Keep the fuel pump as far away from the battery as possible. .**
- **Always perform switching at the battery side.**

4. RECONNECT FUEL PUMP CONNECTOR

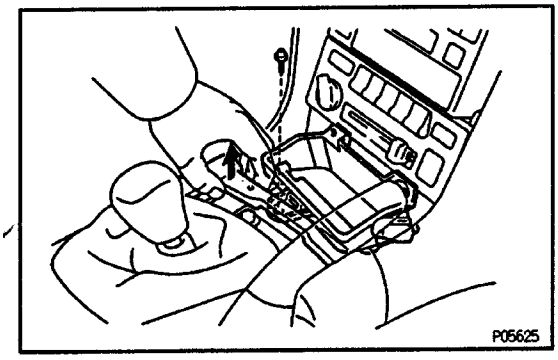

6. REINSTALL ASH RECEPTACLE RETAINER

(See steps 7 and 9 in Fuel Pump Installation)

EG0XZ–01

FUEL PUMP REMOVAL

(See Components for Removal and Installation)
CAUTION: Do not smoke or work near an open flame when working on the fuel pump.

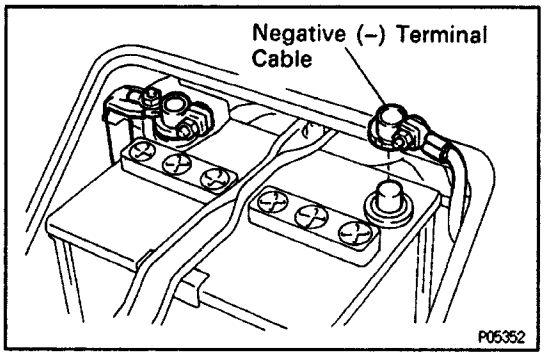

1. DISCONNECT CABLE FROM NEGATIVE TERMINAL OF BATTERY
CAUTION: Turn the ignition switch to 'LOCK'. Disconnect the negative terminal from the battery. Wait at least 20 seconds before proceeding with work.

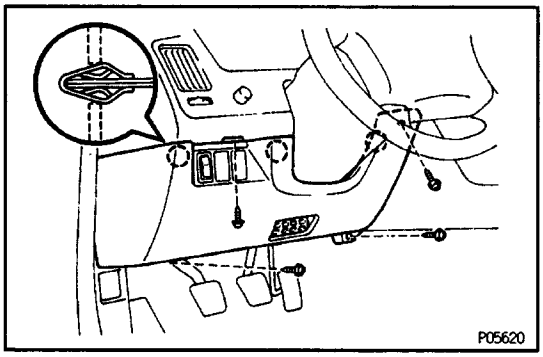

2. DISCONNECT FUEL PUMP CONNECTOR AND FUEL SENDER GAUGE CONNECTOR
(a) Remove the four screws, and disconnect the lower No.1 instrument panel finish panel by pulling it.
(b) Disconnect the connector, and remove the lower No. 1 instrument panel finish panel.
(c) Remove the ash receptacle box.

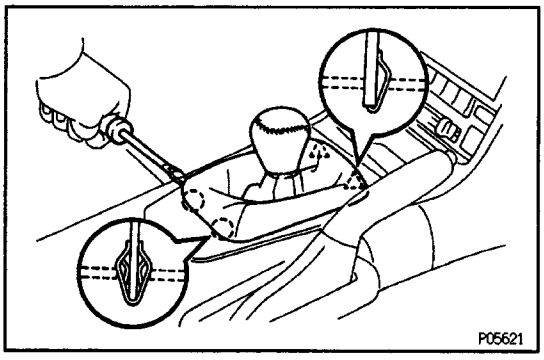

(d) Using a screwdriver, pry out the shifting hole cover.

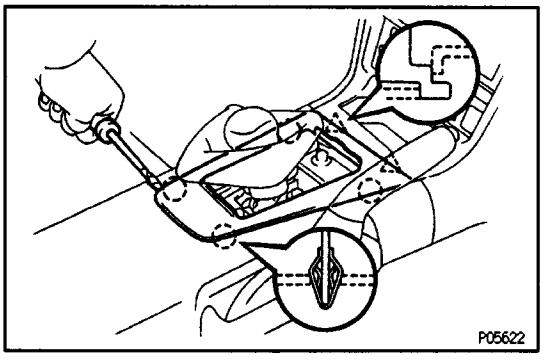

(e) Using a screwdriver, pry out the upper console panel.

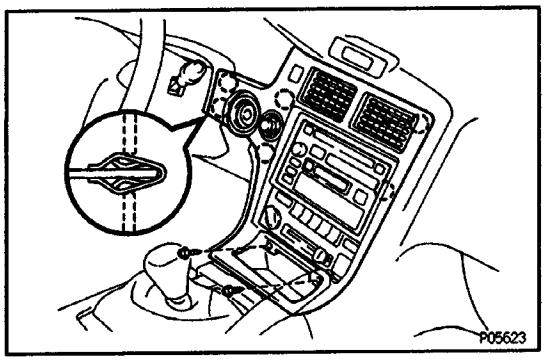

(f) Remove the two screws, and disconnect the center instrument cluster finish panel by pulling it.
(g) Disconnect the connectors, and remove the center instrument cluster finish panel.

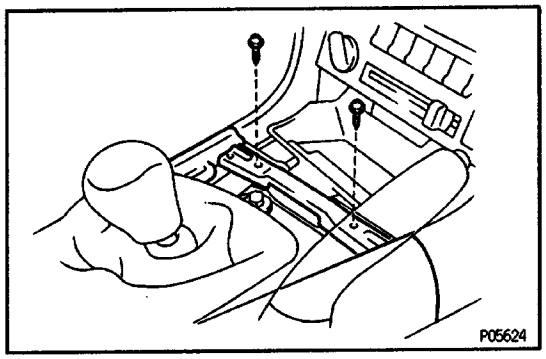

(h) Remove the two screws holding the console box to the instrument panel safety pad.

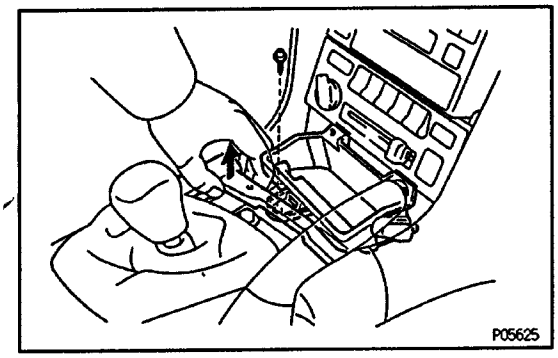

(i) Remove the ash receptacle retainer mounting screw by lifting the front side of the console box.
(j) Disconnect the connector, and remove the ash re–ceptacle retainer.

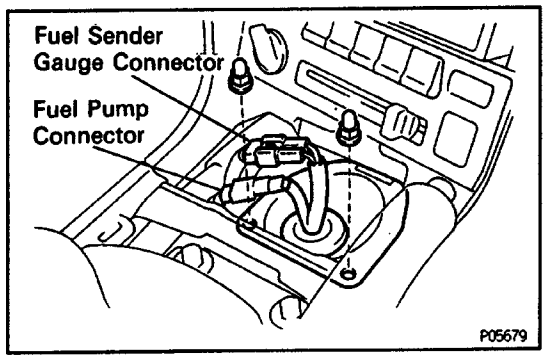

(k) Disconnect the fuel pump connector and fuel sender gauge connector.
(l) Remove the grommet from the service hole cover.
(m) Remove the two nuts and service hole cover.

3. REMOVE ENGINE UNDER COVERS
4. REMOVE FRONT LUGGAGE UNDER COVER
5. REMOVE FUEL TANK PROTECTORS
6. DRAIN FUEL

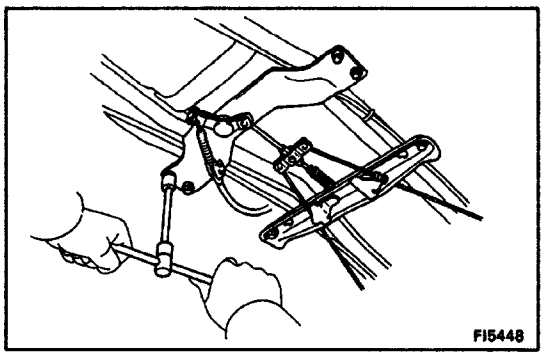

7. REMOVE PARKING BRAKE INTERMEDIATE LEVER AND NO.1 CENTER FLOOR CROSSMEMBER

(a) Remove the four bolts and intermediate lever.
(b) Remove the two bolts and crossmember.
(c) Disconnect the parking brake cable from the intermediate lever.

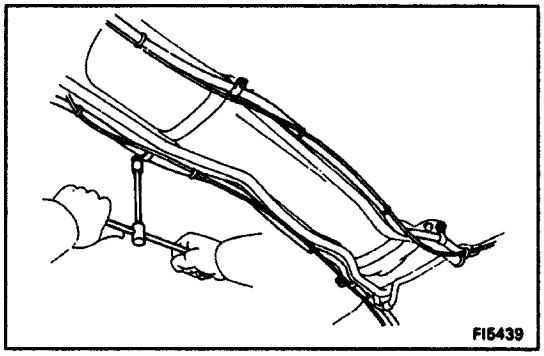

8. REMOVE A/C PIPES FROM BODY

Remove the four bolts, and disconnect the two A/C pipes from the body.

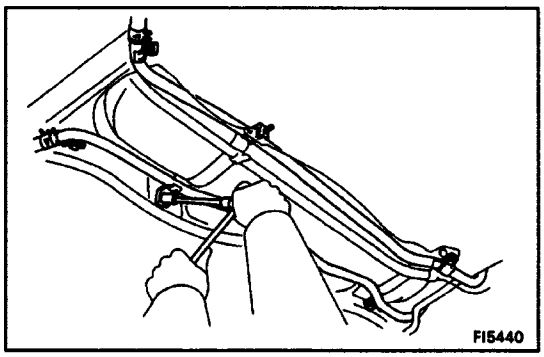

9. DISCONNECT RADIATOR PIPES FROM BODY

Remove the six bolts, and disconnect the two radiator pipes from the body.

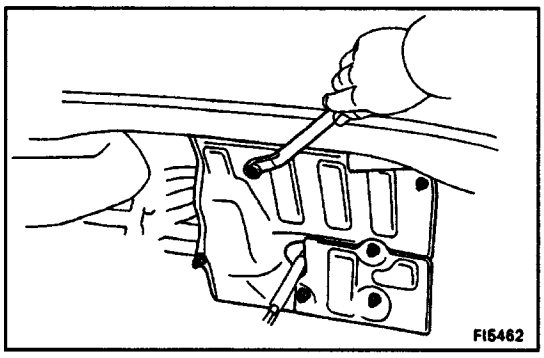

10. REMOVE FUEL TANK HEAT INSULATORS

Remove the six nuts and two heat insulators.

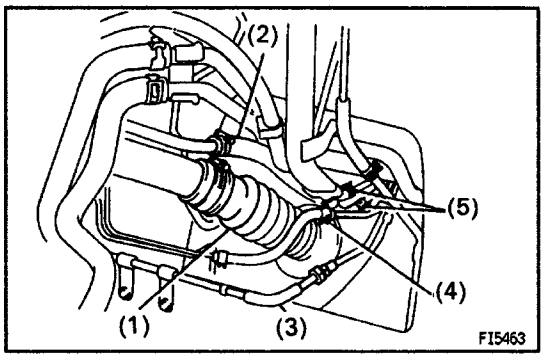

11. DISCONNECT HOSES AND TUBE

CAUTION: Remove the fuel filter cap to prevent the fuel from flowing out.

Disconnect the following hoses and tube:

(1) Fuel inlet hose
(2) Fuel breather hose
(3) Fuel pump hose
(4) Fuel return hose
(5) Two fuel evaporative bent hose

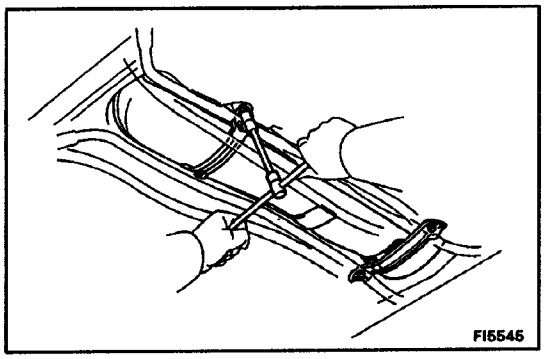

12. REMOVE FUEL TANK

(a) Remove the bolt, pin and tank band.
(b) Remove the two bolts and No.2 center floor cross–member.
(c) Remove the fuel tank.

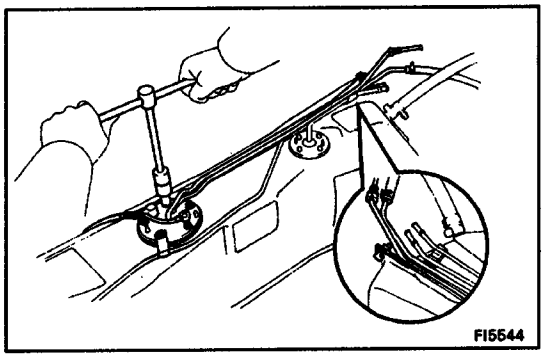

13. REMOVE FUEL PUMP ASSEMBLY FROM FUEL TANK

(a) Remove the bolt holding the fuel pump tube to the fuel tank.
(b) Remove the five bolts, and pull out the fuel pump assembly.
(c) Remove the gasket from the pump bracket.

COMPONENTS FOR DISASSEMBLY AND ASSEMBLY

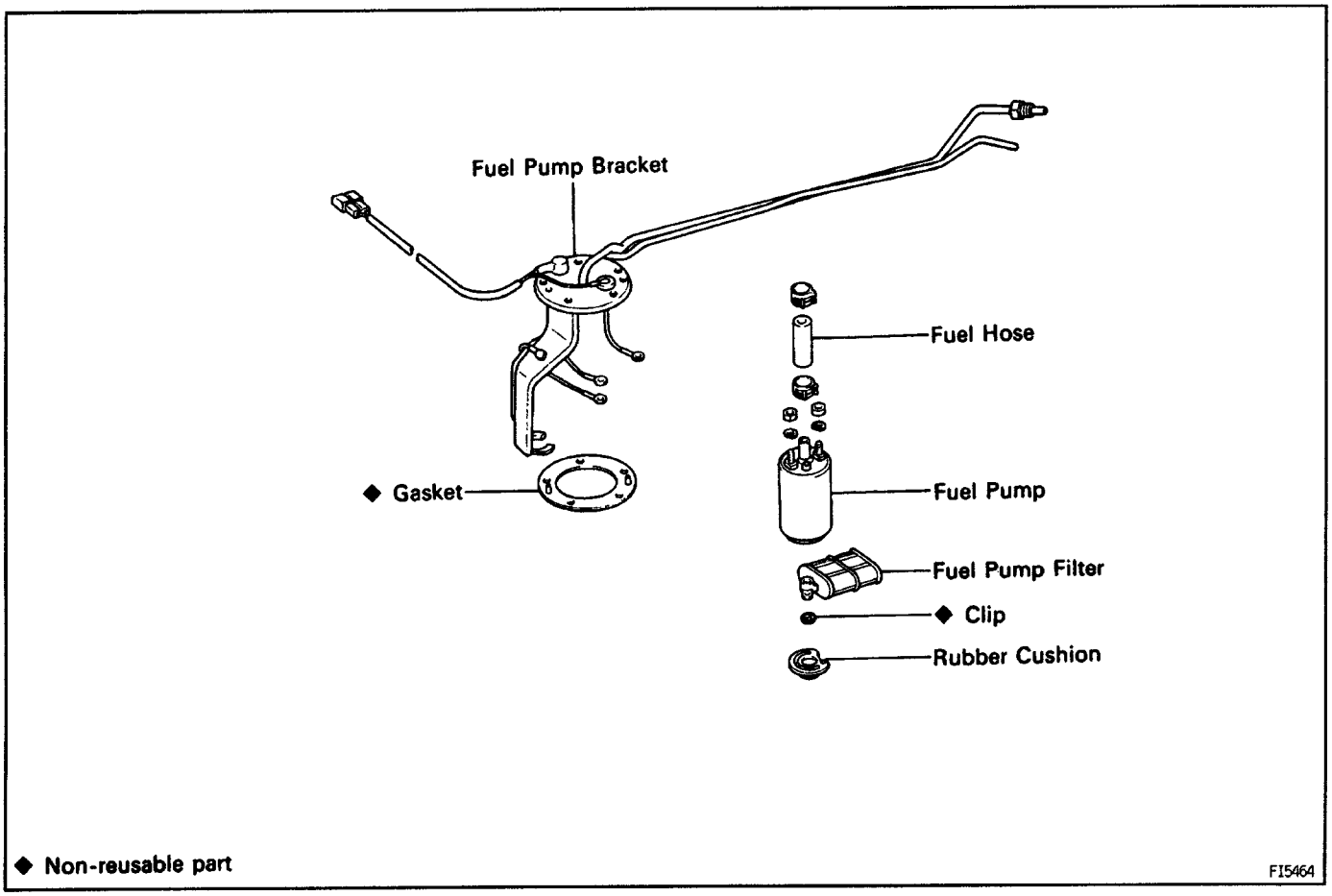

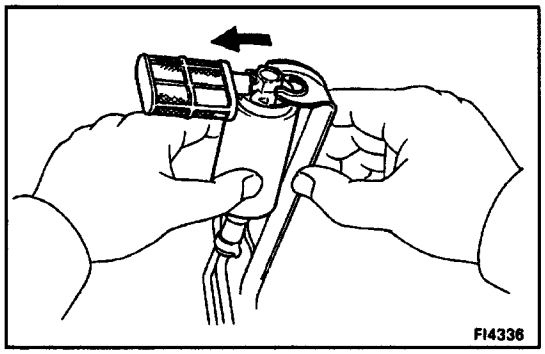

EG0Y0–01

FUEL PUMP DISASSEMBLY

(See Components for Disassembly and Assembly)

1. REMOVE FUEL PUMP FROM FUEL PUMP BRACKET

(a) Pull out the lower side of the fuel pump from the pump bracket.
(b) Remove the rubber cushion from the fuel pump.
(c) Remove the nut and spring washer, and disconnect the lead wire from the fuel pump. Disconnect the three lead wires.
(d) Disconnect the fuel hose from the fuel pump, and remove the fuel pump.

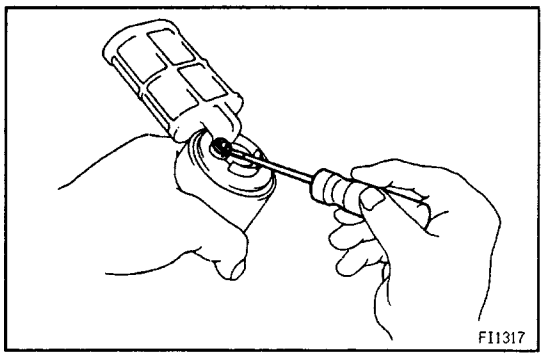

2. REMOVE FUEL PUMP FILTER FROM FUEL PUMP

(a) Using a small screwdriver, pry out the clip.
(b) Pull out the pump filter.

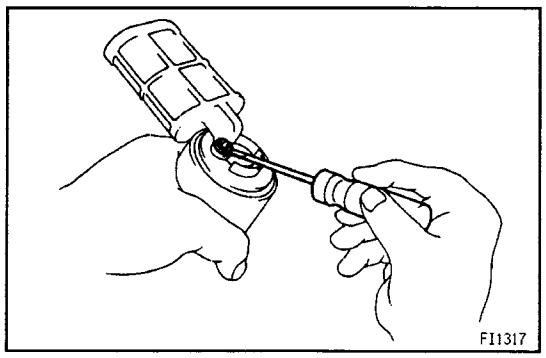

EG0Y1–01

FUEL PUMP ASSEMBLY

(See Components for Disassembly and Assembly)

1. INSTALL FUEL PUMP FILTER TO FUEL PUMP

Install the pump filter with a new clip.

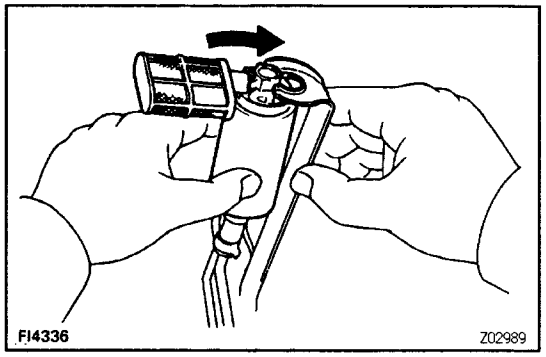

2. INSTALL FUEL PUMP TO FUEL PUMP BRACKET

(a) Connect the fuel hose to the outlet port of the fuel pump.
(b) Connect the lead wire to the fuel pump with the spring washer and nut. Connect the three lead wires.
(c) Install the rubber cushion to the fuel pump.
(d) Install the fuel pump by pushing the lower side of the fuel pump.

EG0Y2–01

FUEL PUMP INSTALLATION

(See Components for Removal and Installation)

1. INSTALL FUEL PUMP ASSEMBLY TO FUEL TANK

(a) Install a new gasket to the pump bracket.

(b) Insert the fuel pump assembly into the fuel tank.

(c) Install the five bolts holding the fuel pump bracket to the fuel tank.

Torque: 3.4 N–m (35 kgf–cm, 30in.–lbf)

(d) Install the five bolts holding the fuel pump tube to the fuel tank.

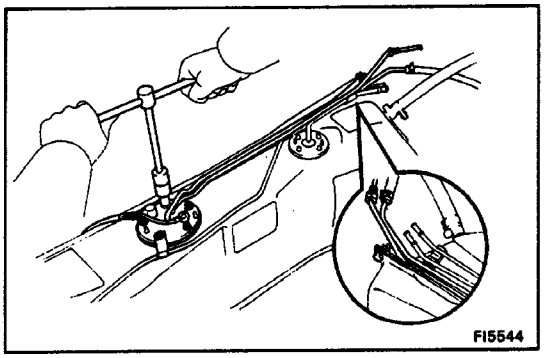

2. INSTALL FUEL TANK

(a) Apply soapy water to the cushions on the fuel tank.

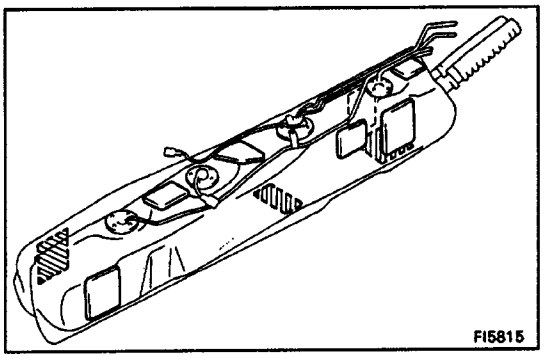

(b) Attach the fuel tank to the body.

(c) Install the fuel tank band with the pin and bolt.

Torque: 29 N–m (300 kgf–cm, 22 ft–lbf)

(d) Install the No.2 center floor crossmember with the two bolts.

Torque: 29 N–m (300 kgf–cm, 22 ft–lbf)

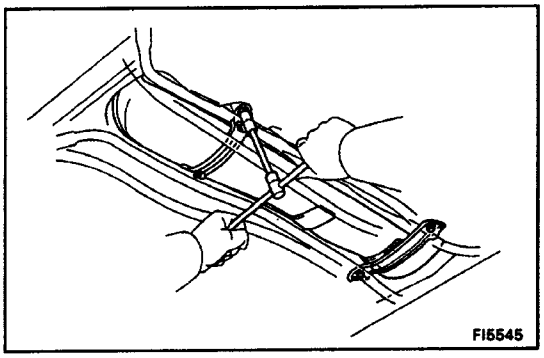

3. CONNECT HOSES AND TUBE

Connect the following hoses and tube:

(1) Fuel inlet hose

(2) Fuel breather hose

(3) Fuel pump hose

(4) Fuel return hose

(5) Two fuel evaporative bent hose

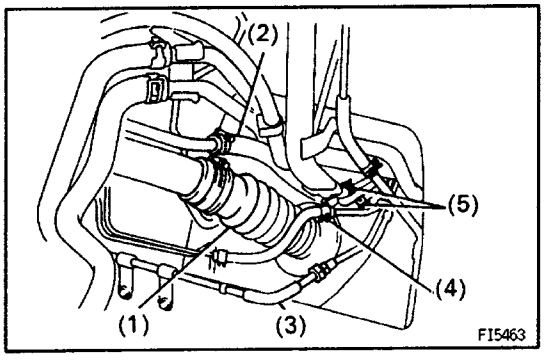

4. INSTALL RADIATOR PIPES TO BODY

Install the two radiator pipes with the six bolts.

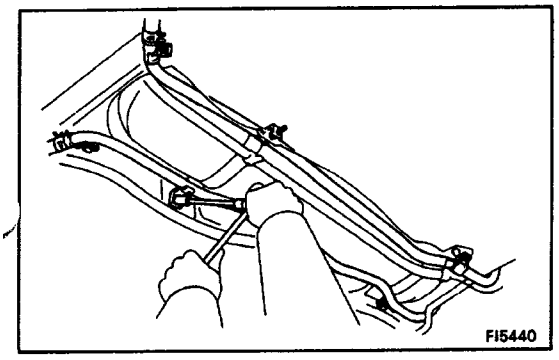

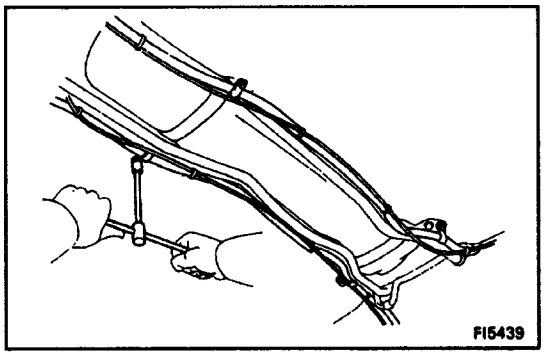

5. INSTALL A/C PIPES TO BODY

Install the two A/C pipes with the four bolts

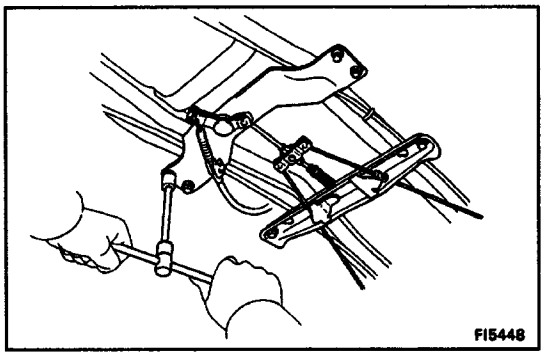

6. INSTALL PARKING BRAKE INTERMEDIATE LEVER AND NO.1 CENTER FLOOR CROSSMEMBER

(a) Connect the parking brake cable to the intermediate lever.
(b) Install the intermediate lever with the four bolts.
(c) Install the crossmember with the two bolts.

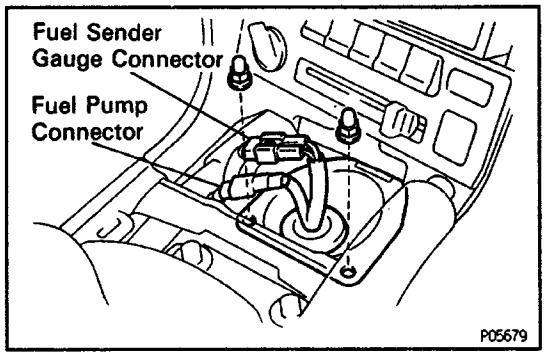

7. CONNECT FUEL PUMP CONNECTOR AND FUEL SENDER GAUGE CONNECTOR

(a) Install the service hole cover with the two nuts.
(b) Connect the fuel pump connector and fuel sender gauge connector.
(c) Install the grommet to the service hole cover.

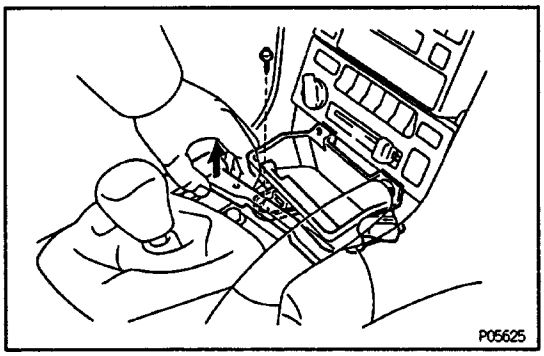

(d) Connect the connector, and install the ash receptacle retainer with the screw by lifting the front side of the console box.

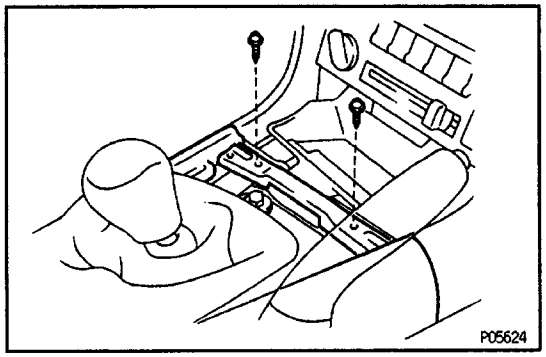

(e) Install the console box to the instrument panel safety pad with the two screws.

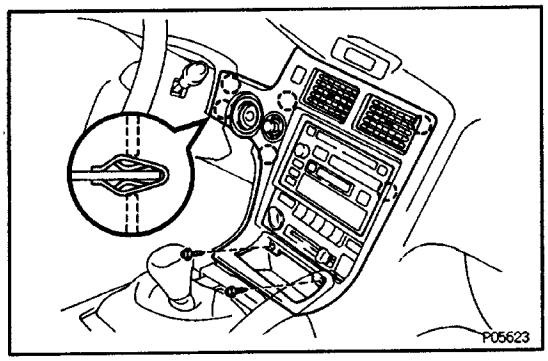

(f) Connect the connectors, and attach the center instrument cluster finish panel to the instrument panel safety pad with the clips.
(g) Install the two screws.

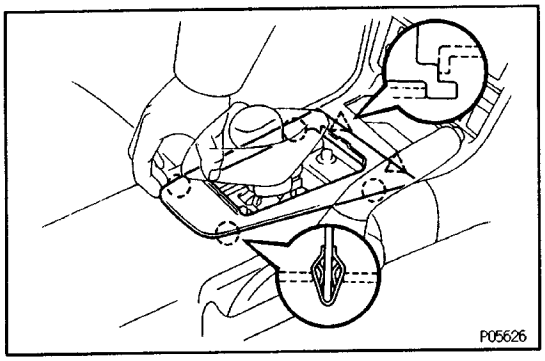

(h) Connect the connector, and attach the upper console panel to the console panel with the two claws and two clips.

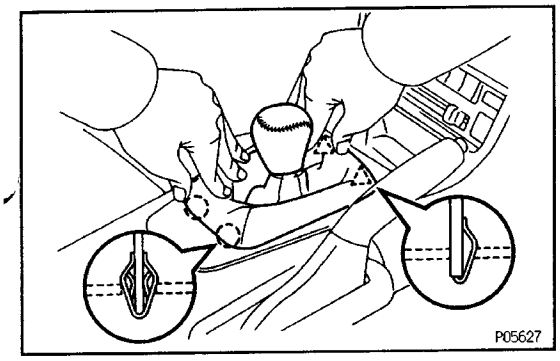

(i) Attach the shifting hole cover with the four clips.
(j) Install the ash receptacle box.

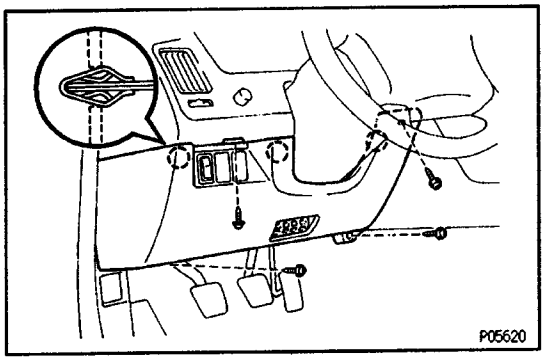

(k) Connect the connector, and attach the lower No.1 instrument panel finish panel with the three clips.
(l) Install the four screws.

8. FILL WITH FUEL
9. CONNECT CABLE TO NEGATIVE TERMINAL OF BATTERY
10. CHECK FOR FUEL LEAKS

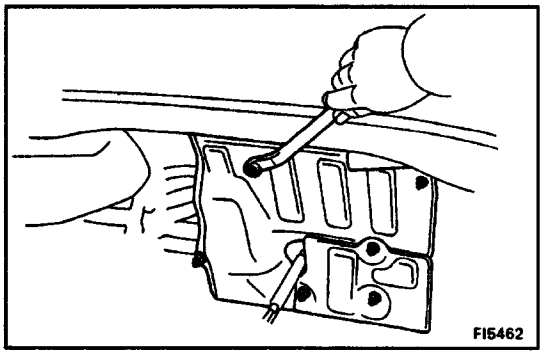

11. INSTALL FUEL TANK HEAT INSULATORS

Install the two heat insulators with the six nuts.

12. INSTALL FUEL TANK PROTECTORS

13. INSTALL FRONT LUGGAGE UNDER COVER

14. INSTALL ENGINE UNDER COVERS

FUEL TANK AND LINE

E000DC–02

COMPONENTS

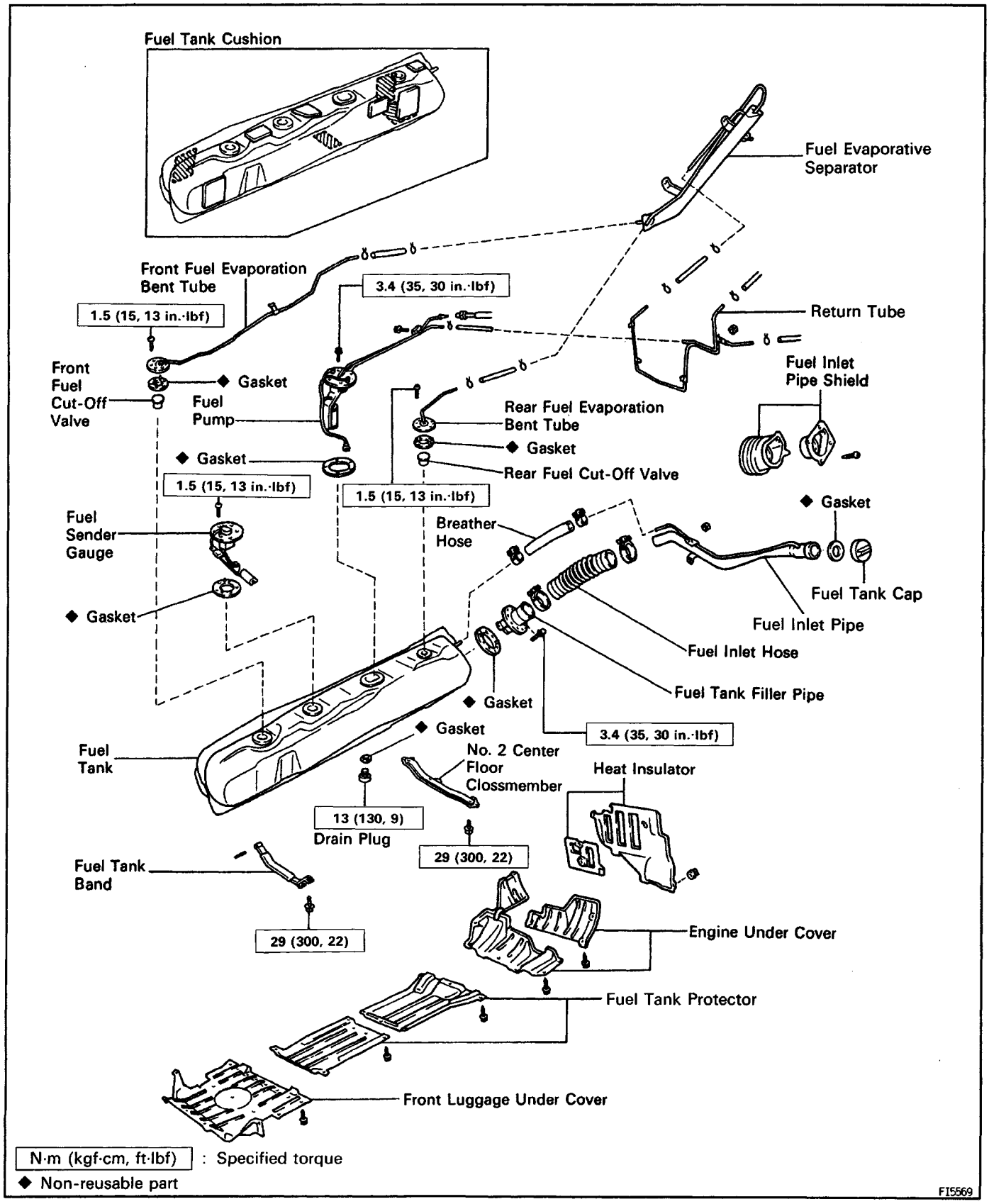

EG0DD–01

PRECAUTIONS

1. Always use new gaskets when replacing the fuel tank or component parts.
2. Apply the proper torque to all parts tightened.

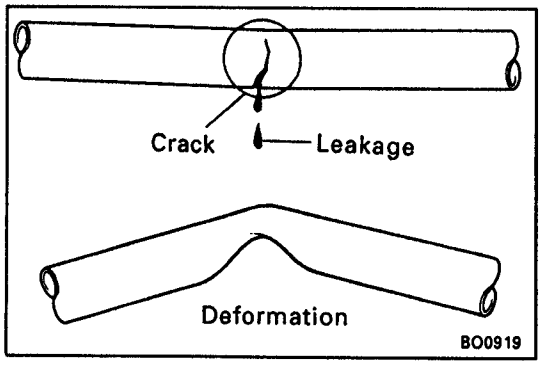

EG0DE–01

FUEL LINES AND CONNECTIONS INSPECTION

(a) Check the fuel lines for cracks or leakage, and all connections for deformation.
(b) Check the fuel tank vapor vent system hoses and connections for looseness, sharp bends or damage.
(c) Check the fuel tank for deformation, cracks fuel lea–kage or tank band looseness.
(d) Check the filler neck for damage or fuel leakage.
(e) Hose and tube connections are as shown in the il–lustration.
If a problem is found, repair or replace the part as necessary.

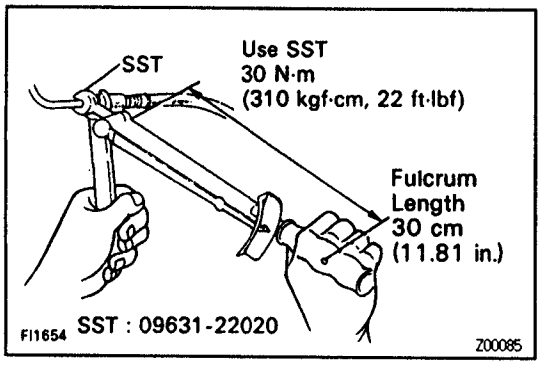

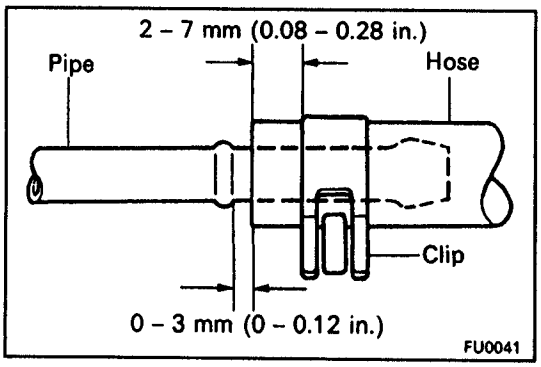

IDLE AIR CONTROL VALVE (IACV)

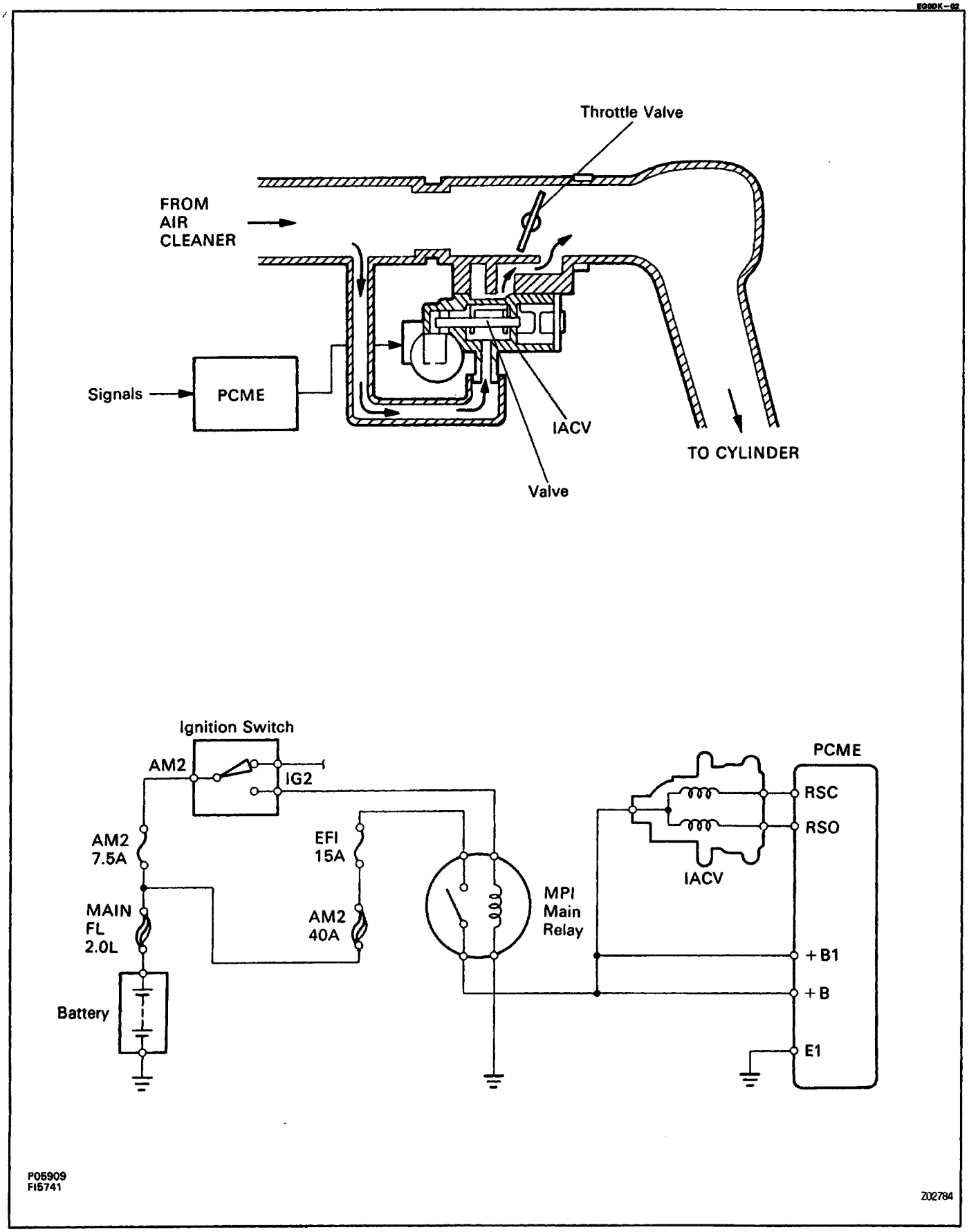

EG0DL–02

ON–VEHICLE INSPECTION

1. INSPECT IACV OPERATION

(a) Initial conditions:

- Engine at normal operating temperature
- Idle speed set correctly
- Transmission in neutral position

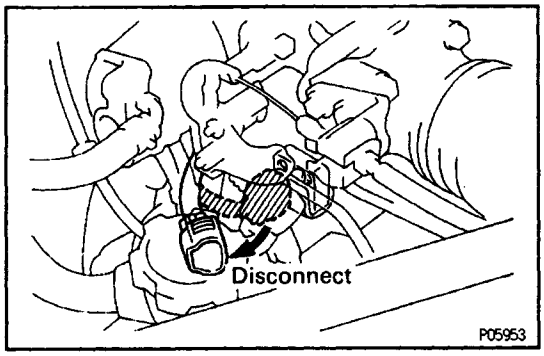

(b) Disconnect the IACV connector.

(c) Check the engine rpm.

Engine rpm:

1,000 rpm or more

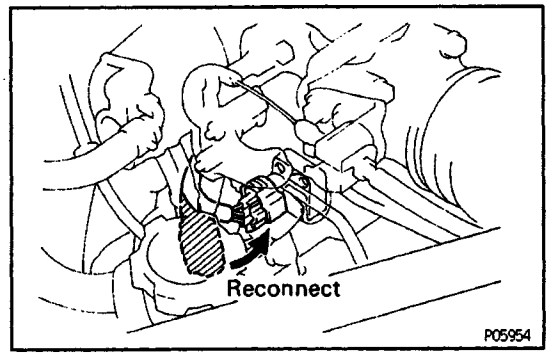

(d) Reconnect the IACV connector.

If the rpm operation is not as specified, check the IACV, wiring and PCME.

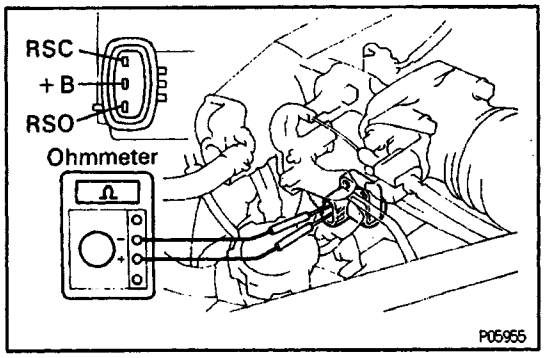

2. INSPECT IACV RESISTANCE

(a) Disconnect the IACV connector.

(b) Using an ohmmeter, measure the resistance between terminal +B and other terminals (RSC, RSO).

Resistance: Ω17.7–23.90

If resistance is not as specified, replace the IACV.

(c) Reconnect the IACV connector.

EGOYQ–01

COMPONENTS FOR REMOVAL AND INSTALLATION

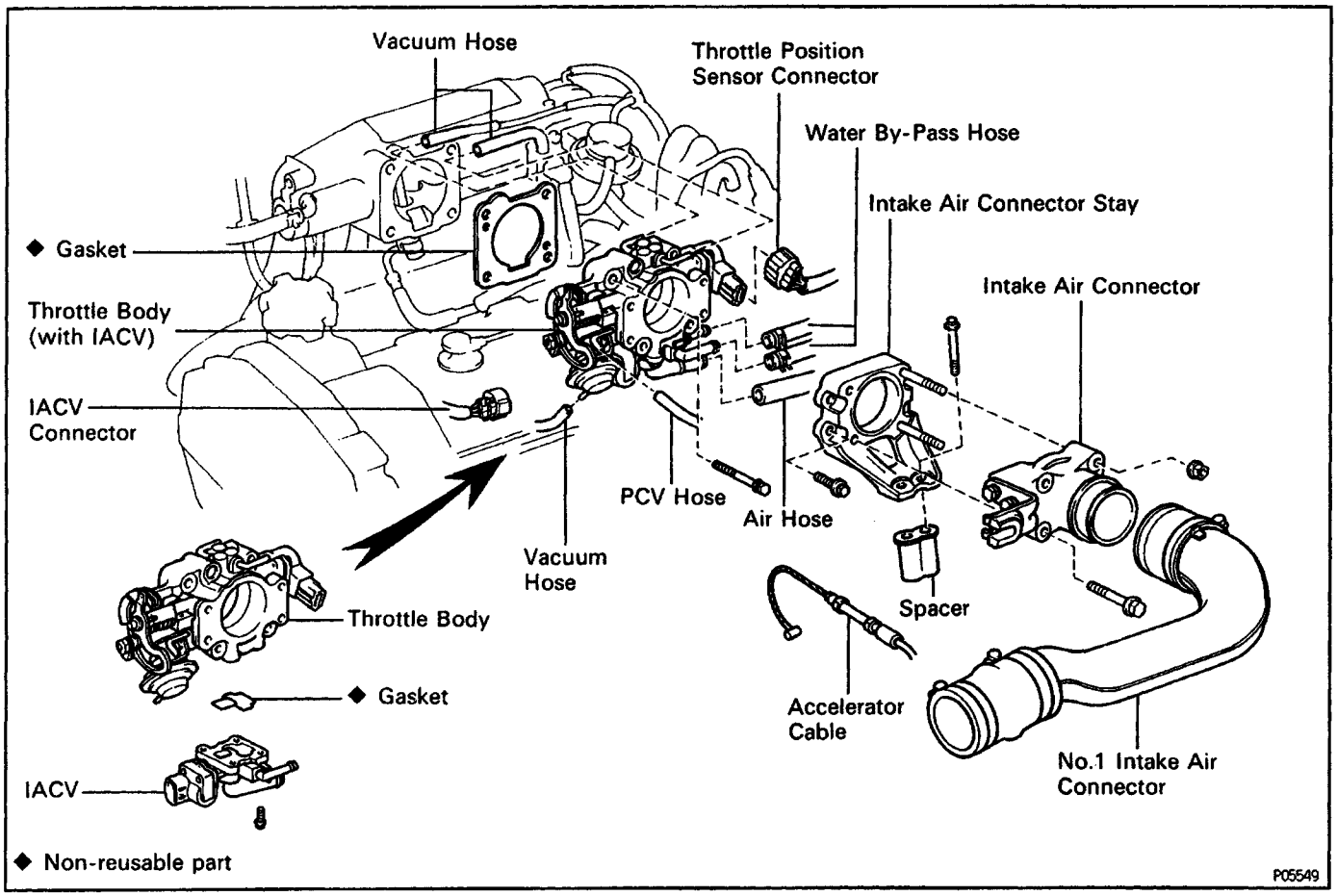

EGOYR–01

IACV REMOVAL

(See Components for Removal and Installation)

1. REMOVE THROTTLE BODY

(See Throttle Body Removal)

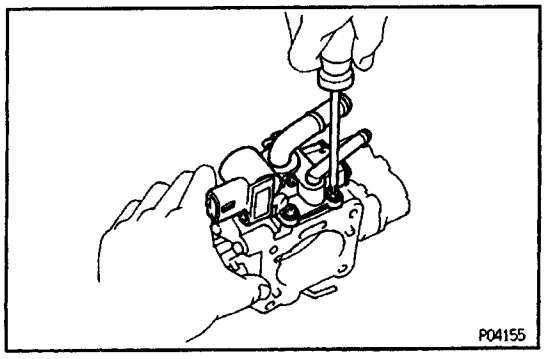

2. REMOVE IACV

Remove the four screws, IACV and gasket.

EG0DN–02

IACV INSPECTION

INSPECT IACV

(a) Connect the position (+) lead from the battery to terminal +B and negative (–) lead to terminal RSC, and check that the valve is closed.

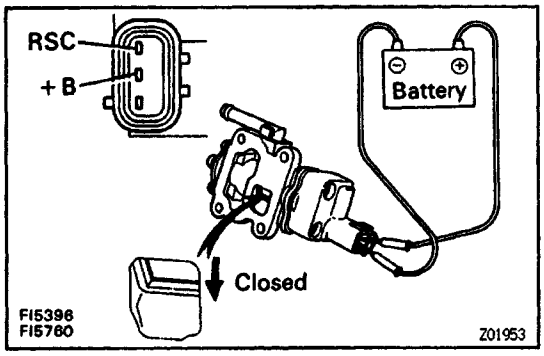

(b) Connect the positive (+) lead from the battery to terminal +B and negative (–) lead to terminal RSO, and check that the valve is open.
If operation is not as specified, replace the IACV.

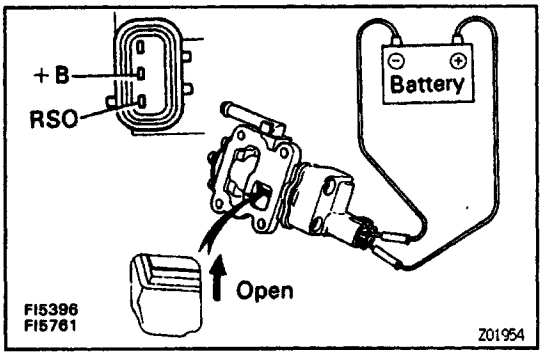

EG0DP–02

IACV INSTALLATION

(See Components for Removal and Installation)

1. INSTALL IACV

(a) Place a new gasket on the throttle body.

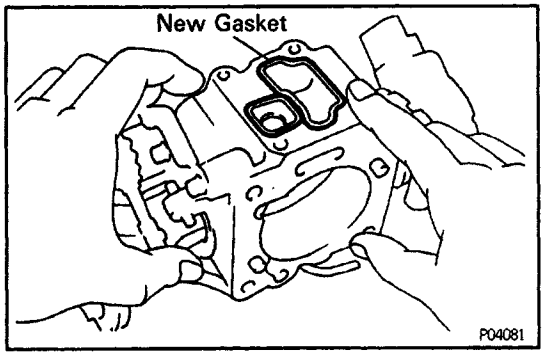

(b) Install the IACV with the four screws.

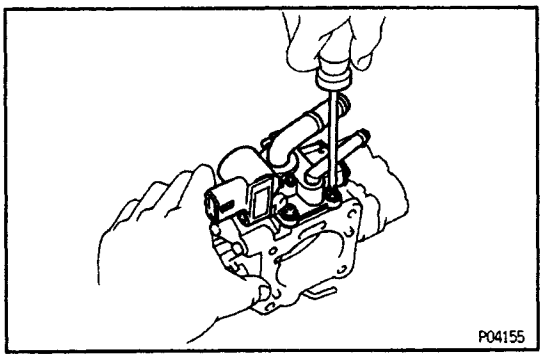

2. INSTALL THROTTLE BODY

(See Throttle Body Installation)

IGNITION MAIN RELAY

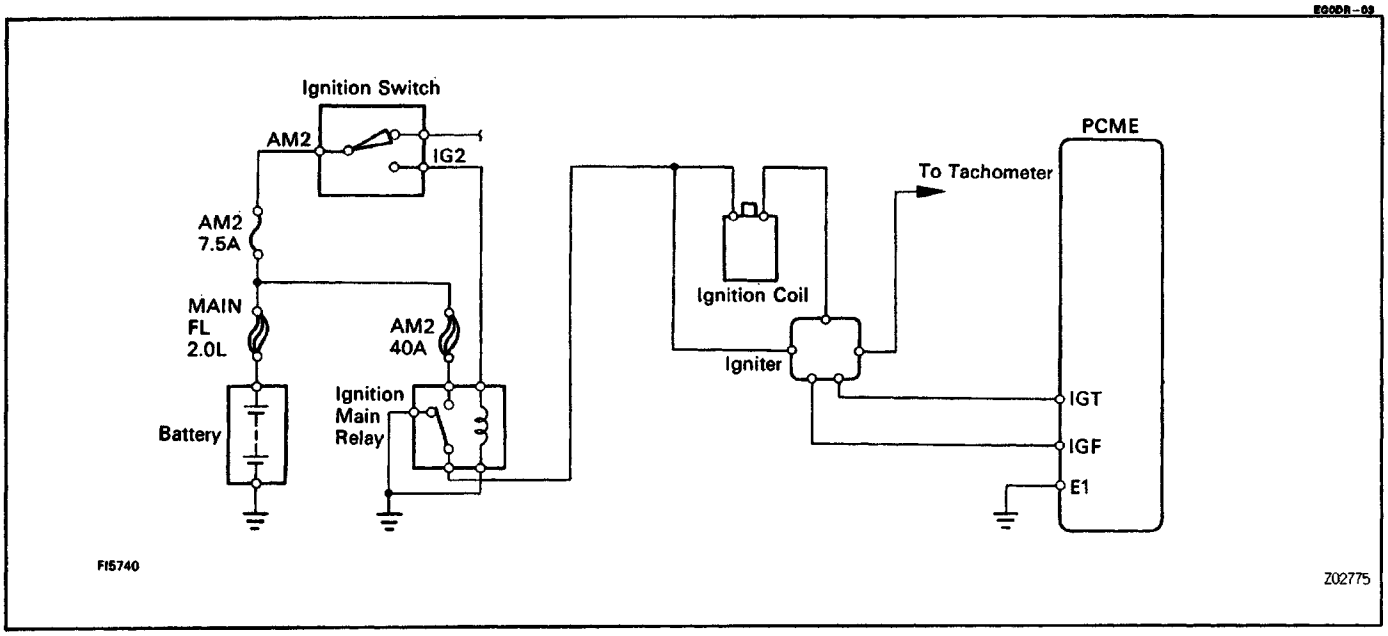

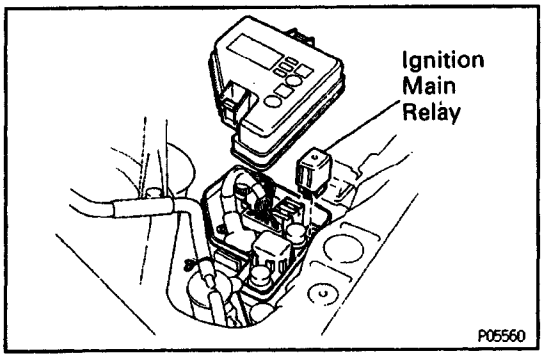

EG0YT–01

IGNITION MAIN RELAY ("IGN") INSPECTION

1. REMOVE IGNITION MAIN RELAY

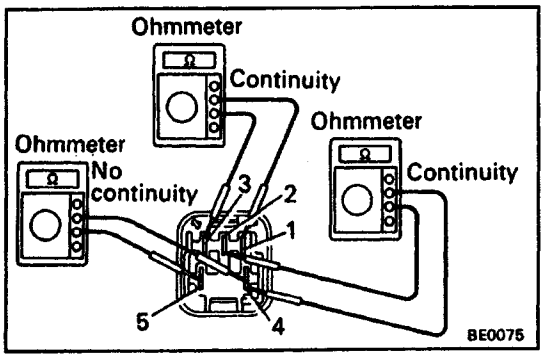

2. INSPECT IGNITION MAIN RELAY

A. Inspect relay continuity

(a) Using an ohmmeter, check that there is continuity between terminals 1 and 3.

(b) Check that there is continuity between terminals 2 and 4.

(c) Check that there is no continuity between terminals 4 and 5.

If continuity is not as specified, replace the relay.

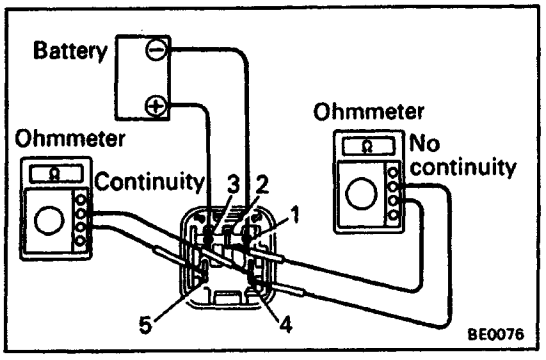

B. Inspect relay operation

(a) Apply battery voltage across terminals 1 and 3.

(b) Using an ohmmeter, check that there is continuity between the 2 and 4.

(c) Check that there is continuity between terminals 4 and 5.

If operation is not as specified, replace the relay.

3. REINSTALL IGNITION MAIN RELAY

INJECTOR

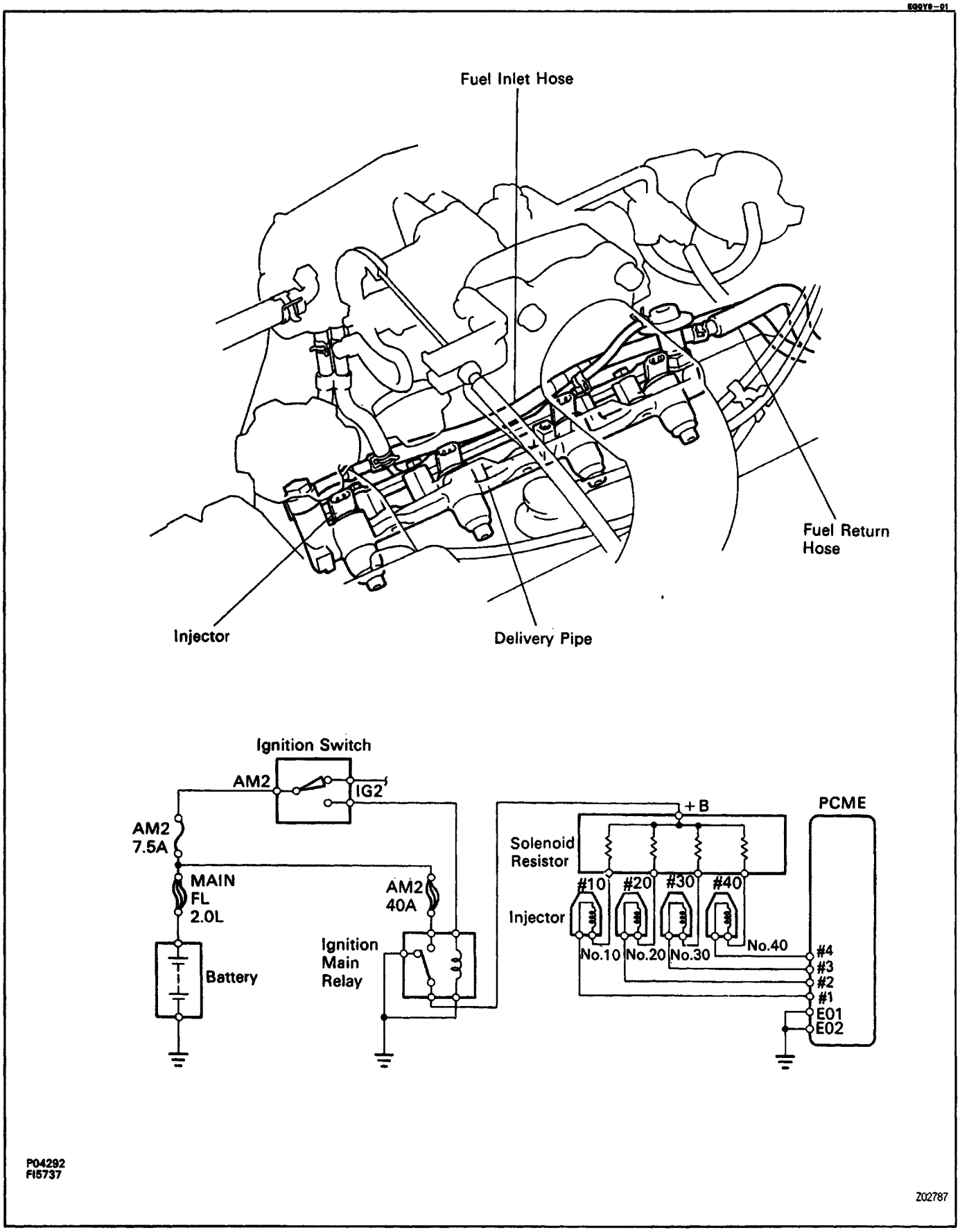
Fuel Inlet Hose
Fuel Return Hose
Injector
Delivery Pipe
Ignition Switch
AM2
IG2
AM2 7.5A
MAIN FL 2.0L
AM2 40A
Battery
Ignition Main Relay
+B
PCME
Solenoid Resistor
Injector
#10
#20
#30
#40
No.10
No.20
No.30
No.40
#4
#3
#2
#1
E01
E02
P04292
FI5737
202787

EG0YA–01

ON–VEHICLE INSPECTION

1. INSPECT INJECTOR OPERATION

Check operation sound from each injector.

(a) With the engine running or cranking, use a sound scope to check that there is normal operating noise in proportion to engine rpm.

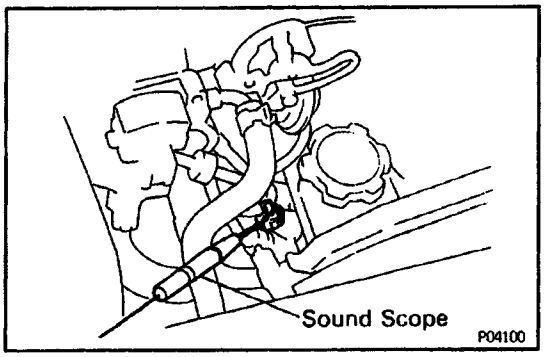

(b) If you have no sound scope, you can check the injector transmission operation with a screwdriver.
If no sound or unusual sound is heard, check the wiring connector, injector or injection signal from the PCME.

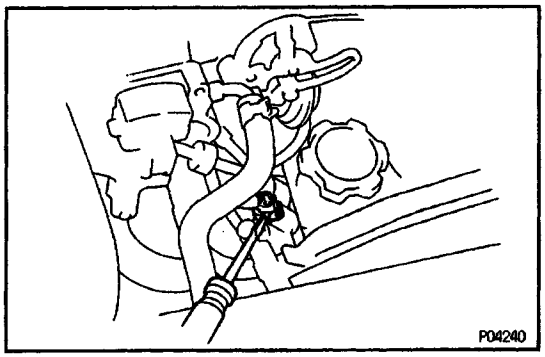

2. INSPECT INJECTOR RESISTANCE

(a) Remove the throttle body.
(See Throttle Body Removal)

(b) Disconnect the four injector connectors.

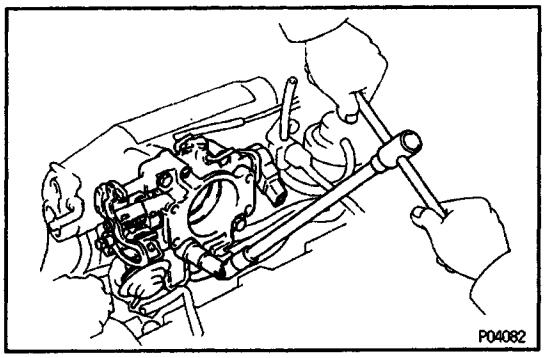

(c) Using an ohmmeter, measure the resistance between the terminals.

Resistance:

Approx. 2 – 4Ω

If the resistance is not as specified, replace the injector.

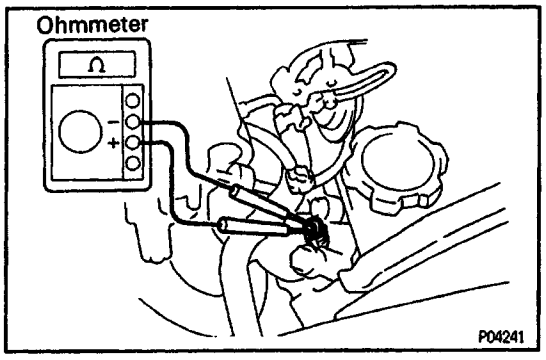

(d) Reconnect the four injector connectors.

(e) Reinstall the throttle body.
(See Throttle Body Installation)

EGOY8–01

COMPONENTS FOR REMOVAL AND INSTALLATION

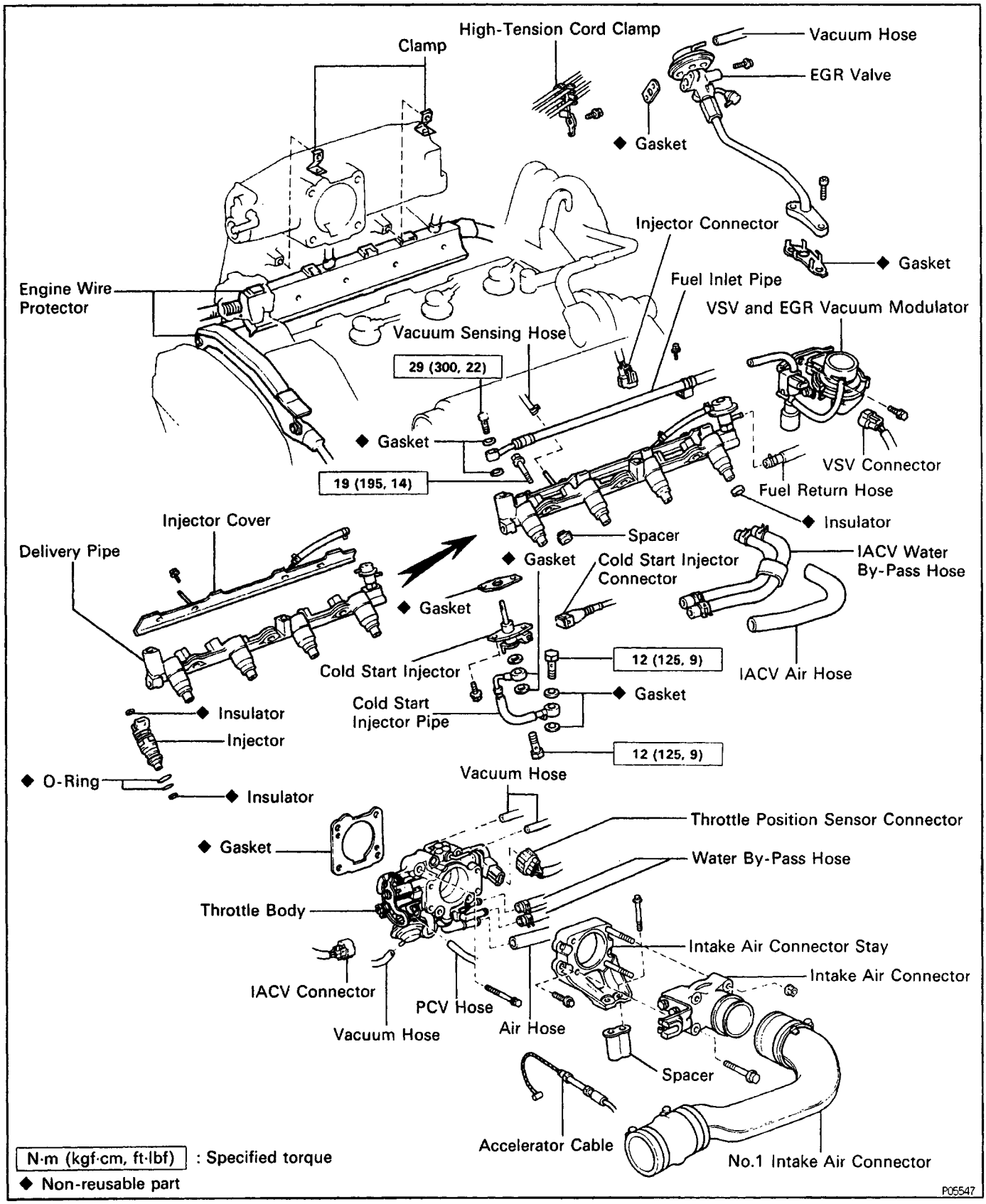

EG0YC–01

INJECTORS REMOVAL

(See Components for Removal and Installation)

1. REMOVE THROTTLE BODY

(See Throttle Body Removal)

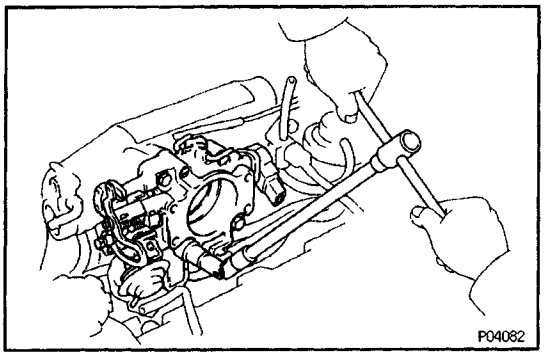

2. REMOVE COLD START INJECTOR PIPE

Remove the two union bolts, four gaskets and cold start injector pipe.

CAUTION:

- Put a suitable container or shop towel under the injector pipe.
- Slowly loosen the union bolts.

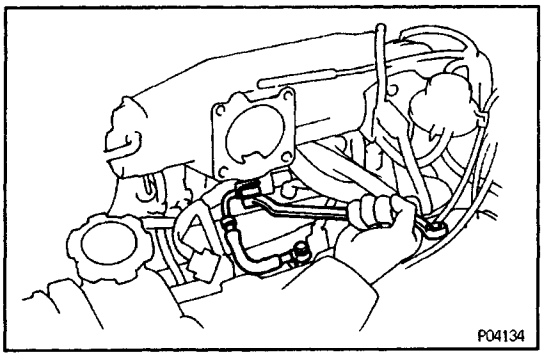

3. REMOVE COLD START INJECTOR

(a) Disconnect the cold start injector connector.

(b) Remove the two bolts, cold start injector and gasket.

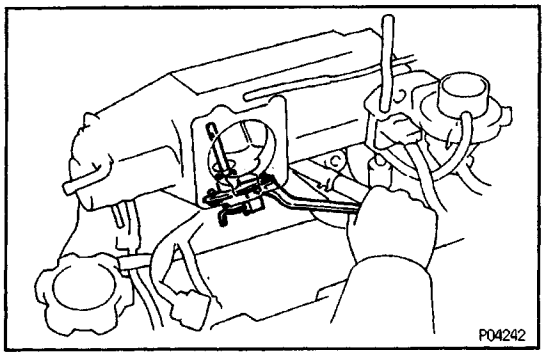

4. REMOVE VSV AND EGR VACUUM MODULATOR

(a) Disconnect the VSV connector.

(b) Remove the following hoses from the vacuum modulator:

(1) EGR hose (from EGR valve)

(2) Vacuum hose (from EGR valve)

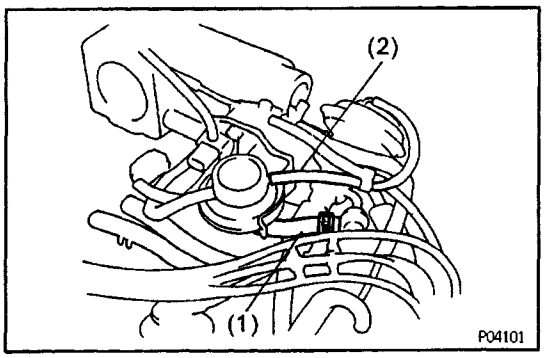

(c) Remove the bolt, the VSV and vacuum modulator assembly.

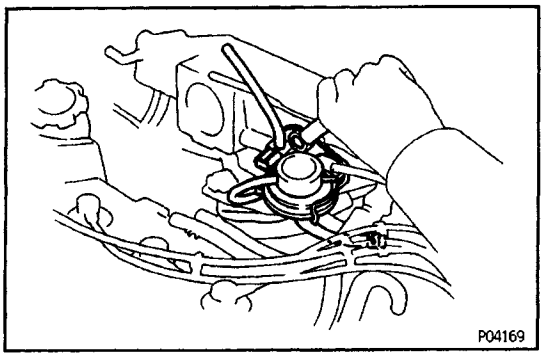

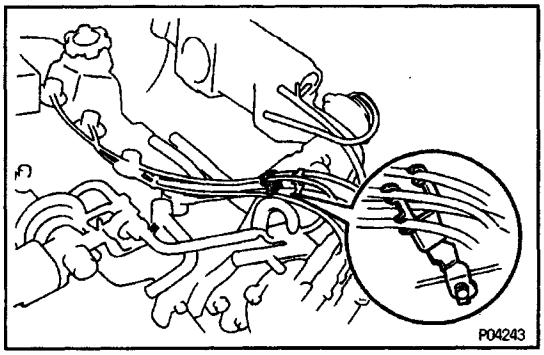

5. REMOVE EGR VALVE

(a) Disconnect the vacuum hose from the EGR valve.

(b) Remove the bolt, and disconnect the high–tension cord clamp from the LH engine hanger.

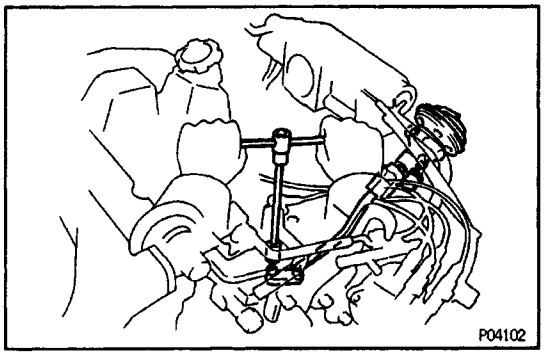

(c) Remove the four bolts, EGR valve and two gaskets.

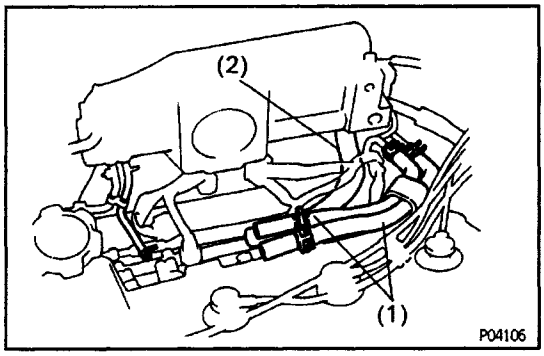

6. REMOVE WATER BY–PASS HOSE AND AIR HOSE

Remove the following hoses:

(1) Two IACV water by–pass hoses from No.1 air tube

(2) IACV air hose from No.1 air tube

7. DISCONNECT VACUUM SENSING HOSE FROM VACUUM PIPE (ON INJECTOR COVER)

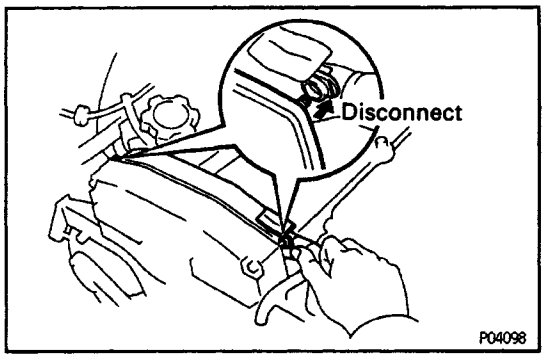

8. DISCONNECT ENGINE WIRE PROTECTORS

(a) Disconnect the engine wire protector between the No. 3 timing belt cover and cylinder head cover.

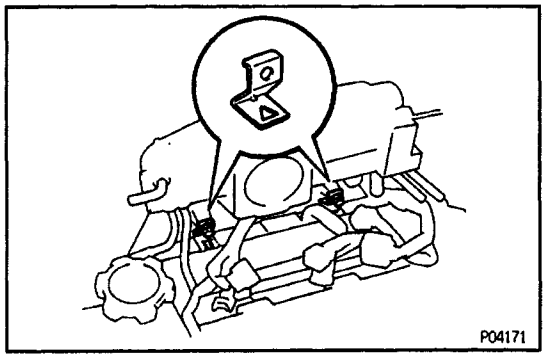

(b) Disconnect the engine wire protector from the clamp, and remove the bolt and clamp. Remove the two clamps.

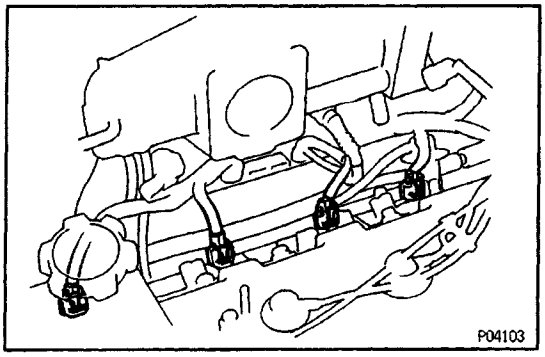

9. REMOVE DELIVERY PIPE ASSEMBLY

(a) Disconnect the four injector connectors.

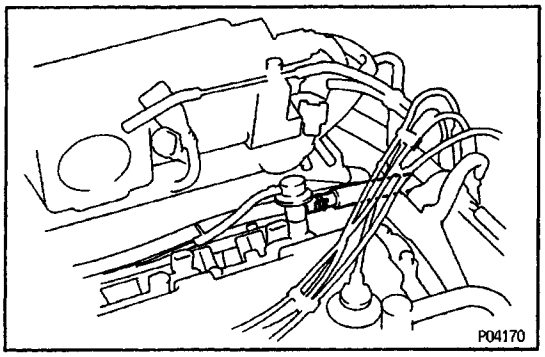

(b) Disconnect the fuel return hose from the fuel pressure regulator.

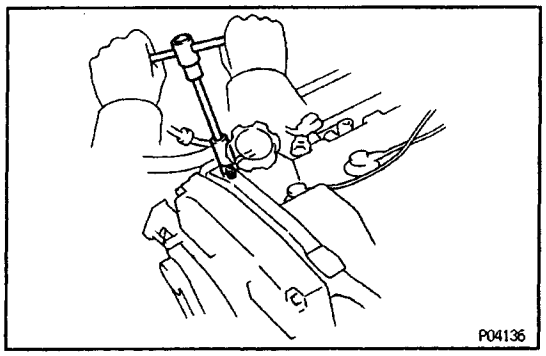

(c) Loosen the union bolt holding the fuel inlet hose to the delivery pipe.

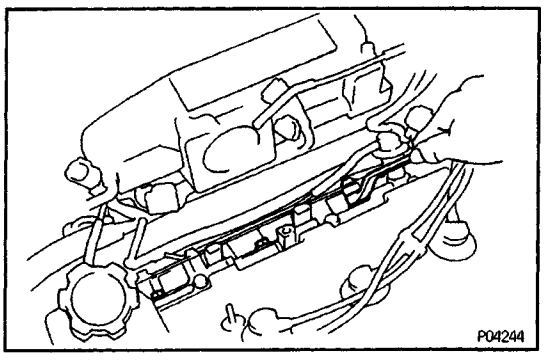

(d) Loosen the three bolts holding the delivery pipe to the cylinder head.

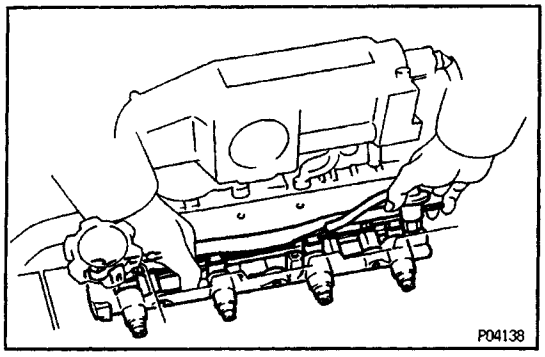

(e) Disconnect the delivery pipe assembly from the cyl–inder head.

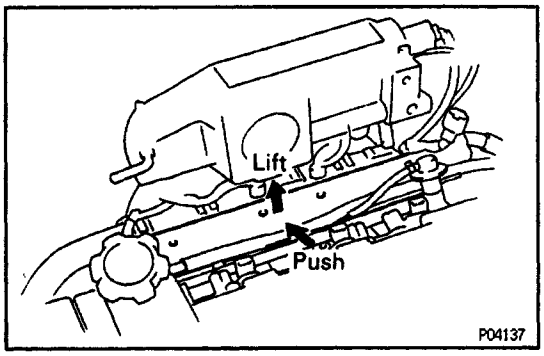

HINT: Move the engine wire protector toward the direction shown, in the illustration.

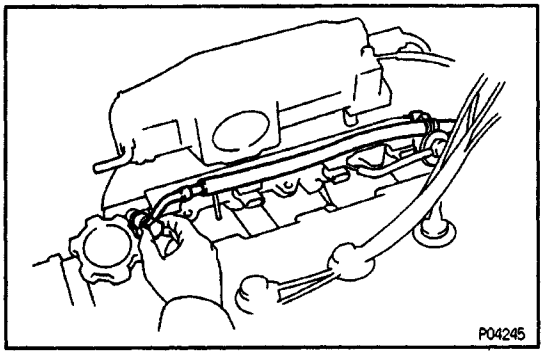

(f) Remove the union bolt, two gaskets and bolt, and disconnect the fuel inlet hose from the delivery pipe. Remove the delivery pipe assembly.
(g) Remove the four insulators and three spacers.

EGOYD–01

INJECTORS INSPECTION

1. INSPECT INJECTOR INJECTION

CAUTION: Keep injector clean of sparks during the test.

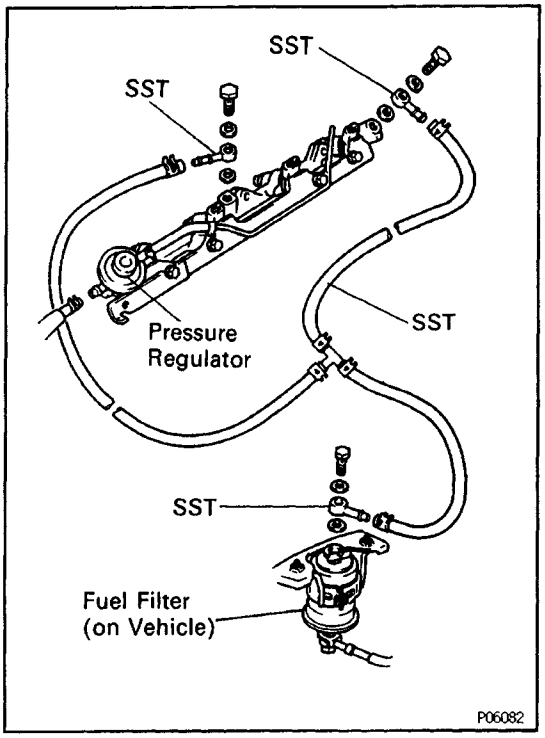

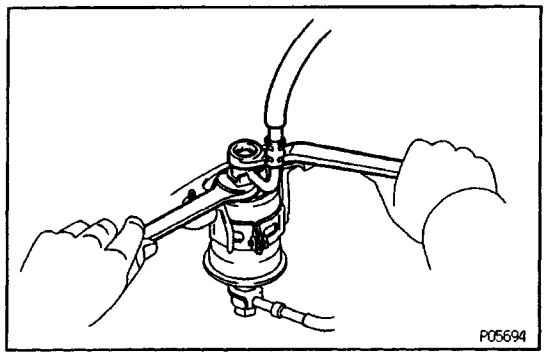

(a) Remove the union bolt and two gaskets, and disconnect the fuel inlet hose from the fuel filter outlet.

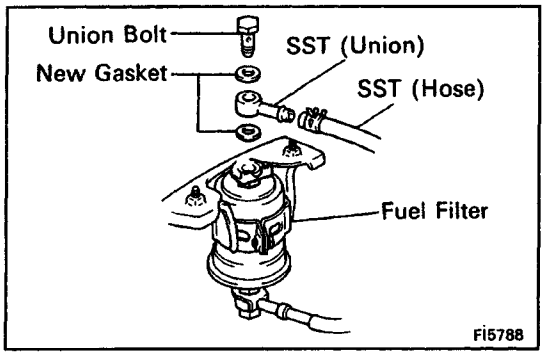

(b) Connect SST (union and hose) to the fuel filter outlet with two new gaskets and union bolts.
SST 09268–41045 (90405–09015)
Torque: 29 N–m (300 kgf–cm, 22 ft–lbf)

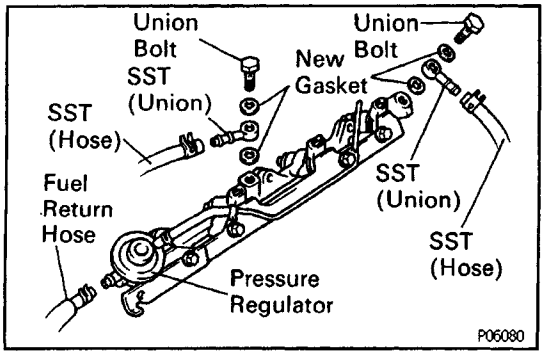

(c) Connect the fuel return hose to the fuel outlet of the pressure regulator on the delivery pipe.
(d) Connect SST (union and hose) to the delivery pipe with four new gaskets and the two union bolts.
SST 09268–41045 (09268–41080, 90405–09015)
Torque:
12 N–m (125 kgf–cm, 9 ft–lbf) for 12 mm head
29 N–m (300 kgf–cm, 22 ft–lbf) for 17 mm head
(e) Put the injector into the graduated cylinder.

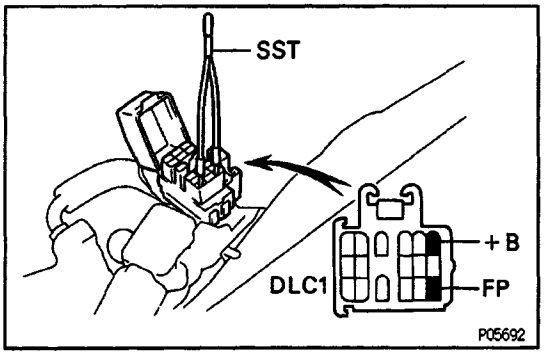

(f) Using SST, connect terminals +B and FP of the data link connector.
SST 09843–18020

(g) Reconnect the battery negative (–) cable.

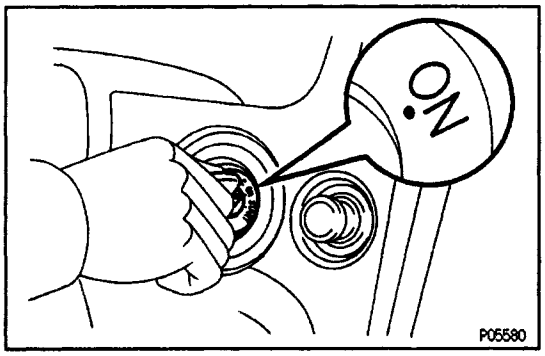

(h) Turn the ignition switch ON.
NOTICE: Do not start the engine.

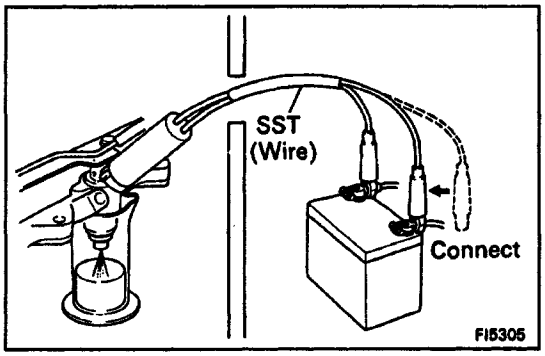

(i) Connect SST (wire) to the injector and battery for 15 seconds, and measure the injection volume with a graduated cylinder. Test each injector two or three times.
SST 09842–30060
Volume:
95 – 120 cm^2 (5.8 – 7.3 cu in.) per 15 second
Difference between each injector:
5 cm^2 (0.3 cu in.) or less
If the injection volume is not as specified, replace the injector.

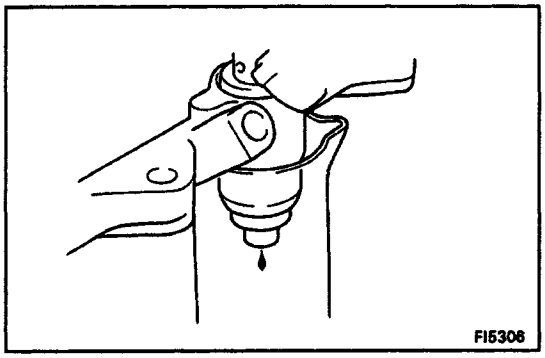

2. INSPECT LEAKAGE

(a) In the condition above, disconnect the test probes of SST (wire) from the battery and check and check for fuel leakage from the injector.
SST 09842–30060
Fuel drop:
One drop or less per minute

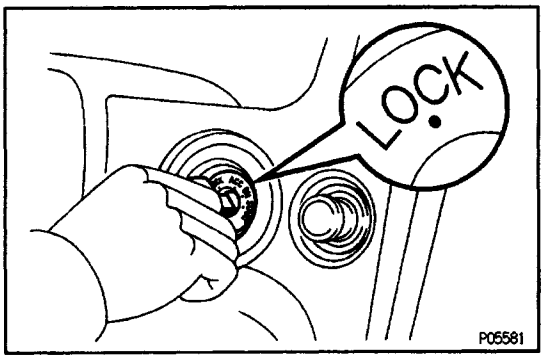

(b) Turn the ignition switch OFF.

(c) Disconnect the battery negative (–) cable.

(d) Remove the SST.
SST 09268–41045, 09843–18020

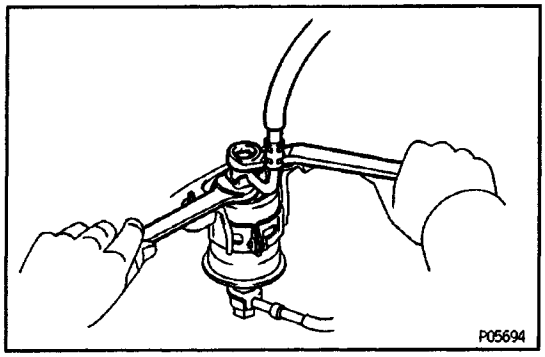

(e) Reinstall the fuel inlet hose to the fuel filter outlet with the two new gaskets and the union bolt.
Torque: 29 N–m (300 kgf–cm, 22 ft–lbf)

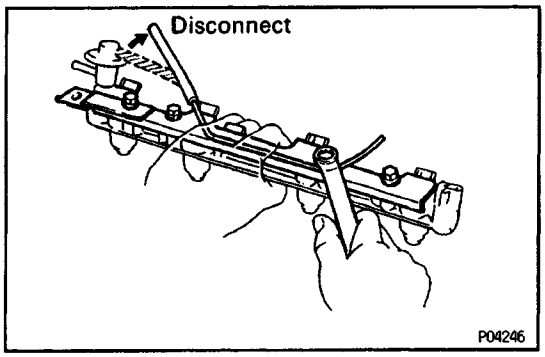

INJECTORS REPLACEMENT

(See Components for Removal and Installation)

1. REMOVE INJECTOR COVER

(a) Disconnect the vacuum sensing hose from the fuel pressure regulator.
(b) Remove the four bolts and injector cover.
(c) Remove the four insulators from the injectors.

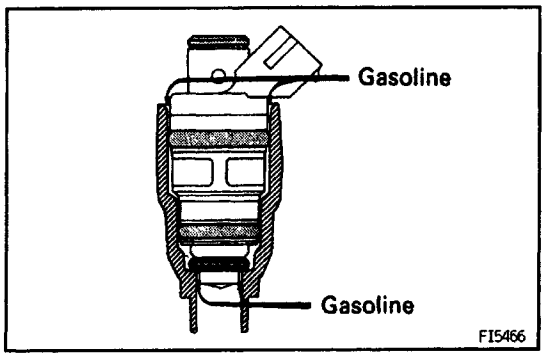

2. REMOVE INJECTORS

(a) Apply gasoline between the delivery pipe and injec–tors.

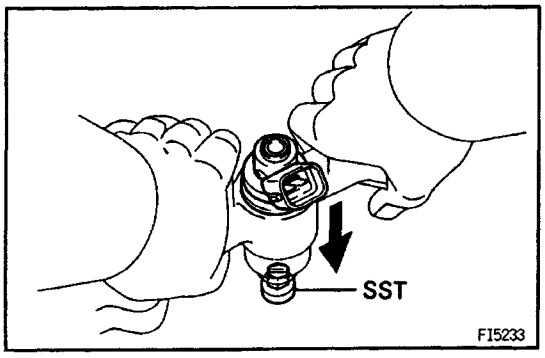

(b) Using SST, lift up the four injectors.
SST 09268–74010

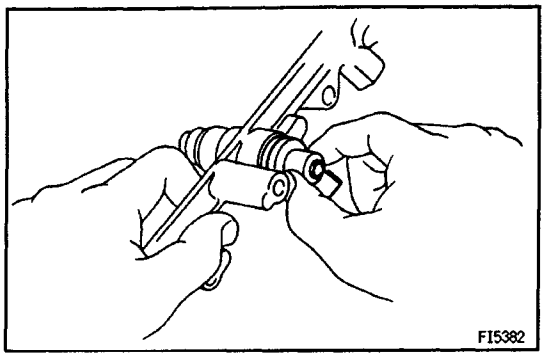

(c) Pull out the four injectors from the delivery pipe.
(d) Remove the insulator and two O–rings from each injector.

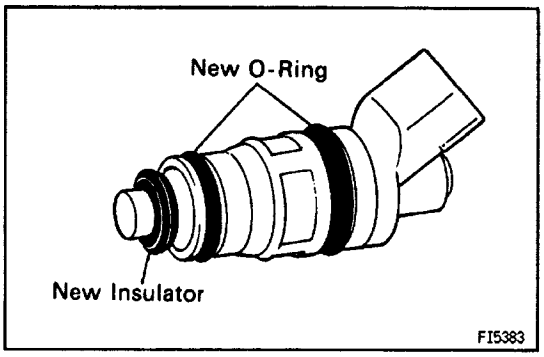

3. INSTALL INJECTORS

(a) Apply a light coat of gasoline to two new O –rings.

(b) Install the two 0–rings and new insulator to each injector.

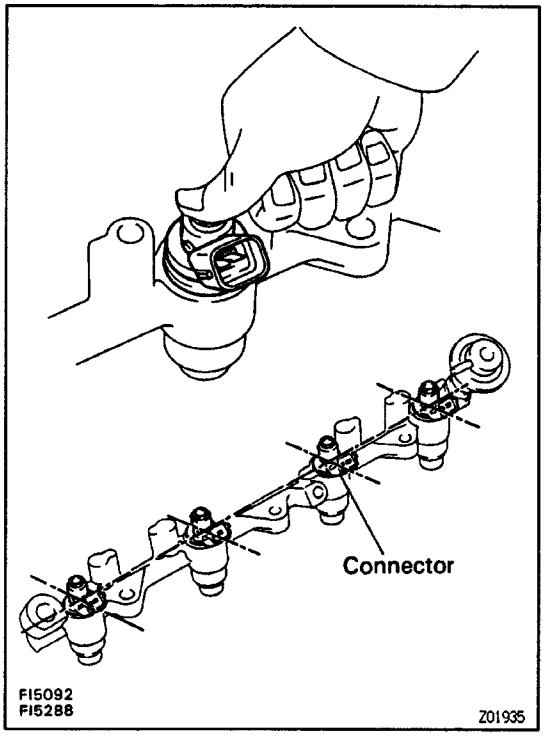

(c) Push in the four injectors so that the injector con–nectors are positioned as shown in the illustration.

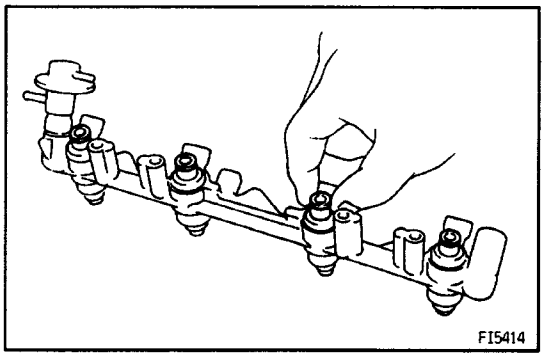

4. INSTALL INJECTOR COVER

(a) Install a new insulator on each injector.

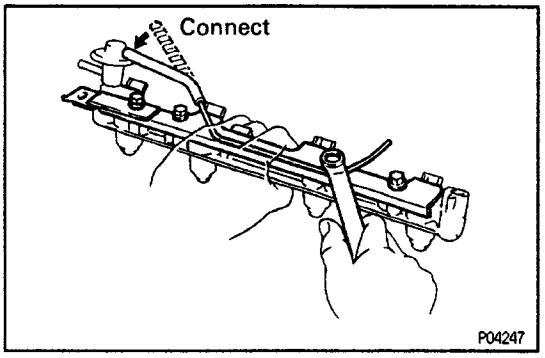

(b) Install the injector cover with the four bolts.
Torque: 7.8 N–m (80 kgf–cm, 69 in.–lbf)

(c) Connect the vacuum sensing hose to the fuel pressure regulator.

EGOYF–01

INJECTORS INSTALLATION

(See Components for Removal and Installation)

1. INSTALL DELIVERY PIPE ASSEMBLY

(a) Install four new insulators to the delivery pipe.

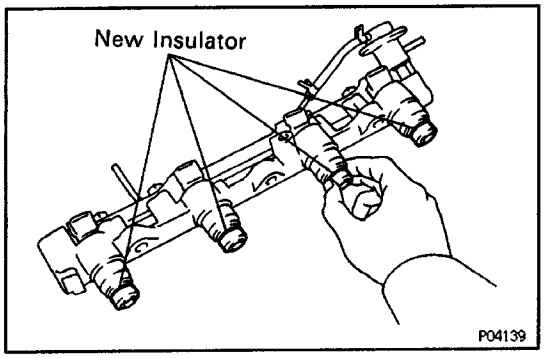

(b) Install the three spacers to the cylinder head.

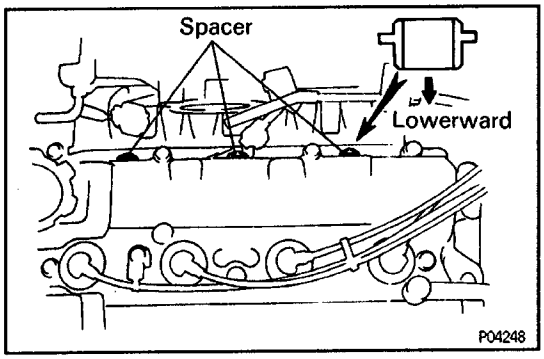

(c) Connect the fuel inlet pipe to the delivery pipe with the two gaskets, union bolt and bolt. Do not tighten the union bolt yet.

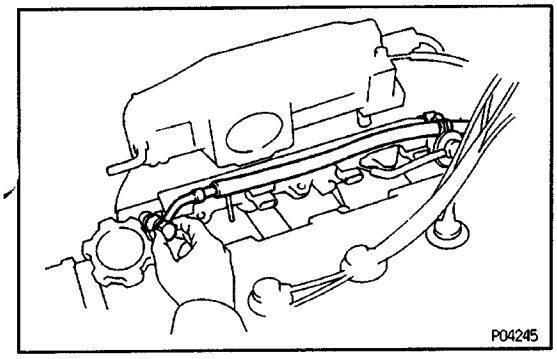

(d) Attach the delivery pipe assembly to the cylinder head.

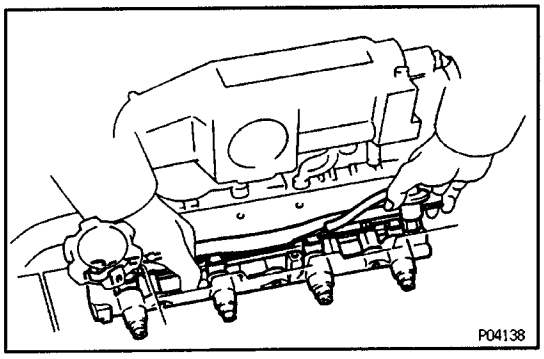

HINT: Move the engine wire protector toward the direction shown, in the illustration.

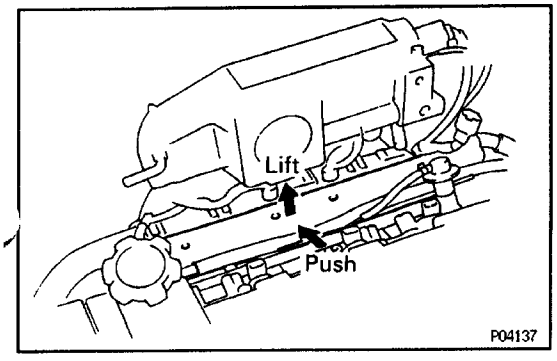

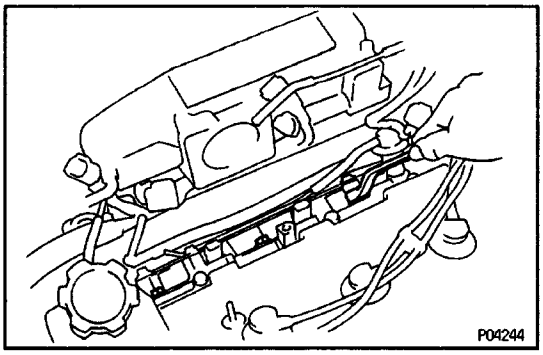

(e) Install the delivery pipe assembly with the three bolts.
Torque: 19 N–m (195 kgf–cm, 14 ft–lbf)

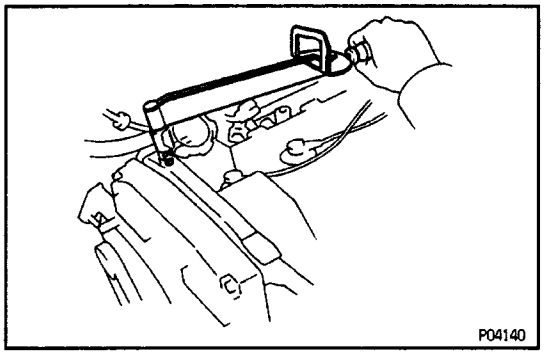

(f) Tighten the union bolt holding the fuel inlet pipe to delivery pipe.
Torque: 29 N–m (300 kgf–cm. 22 ft–lbf)

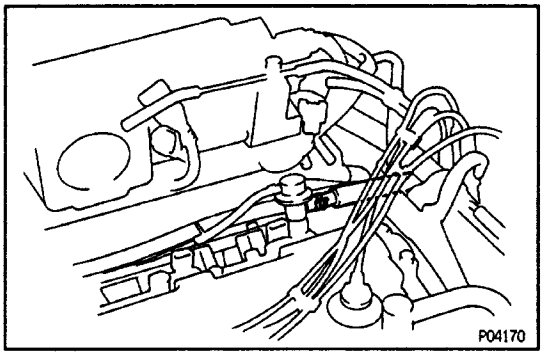

(g) Connect the fuel return hose to the fuel pressure regulator.

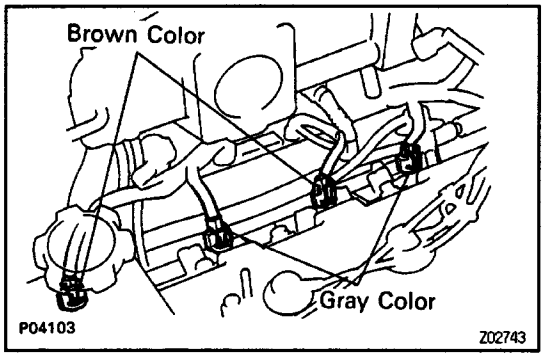

(h) Connect the four injector connectors.
HINT: No.1 and No.3 injector connectors are brown, No.2 and No.4 injector connectors are gray.

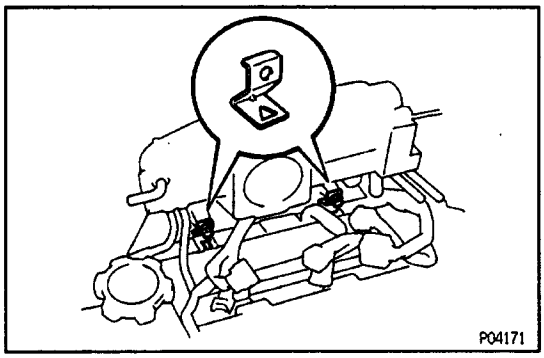

2. INSTALL ENGINE WIRE PROTECTOR

(a) Install the clamp to the intake manifold with the bolt.
Install the two clamps.

(b) Install the engine wire protector to the two clamps.

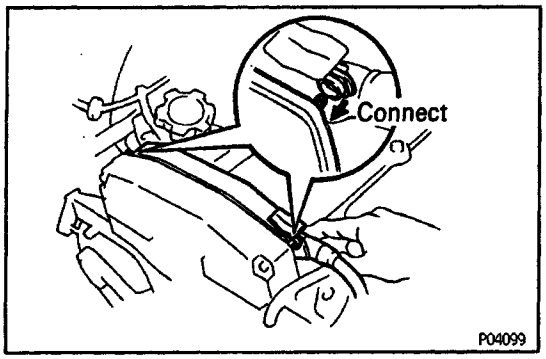

(c) Install two clamps of the engine wire protector to each bolt.

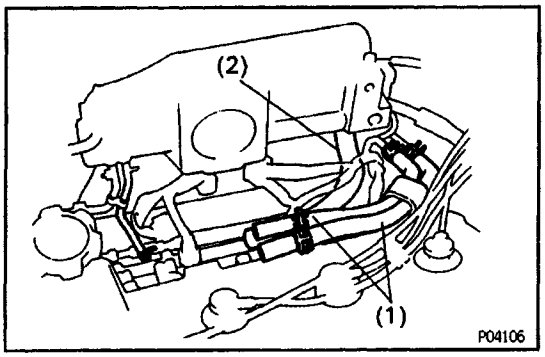

3. INSTALL WATER BY–PASS HOSE AND AIR HOSE

Install the following hoses:

(1) Two IACV water by–pass hoses to No. 1 air tube

(2) IACV air hose to No. 1 air tube

4. CONNECT VACUUM SENSING HOSE TO VACUUM PIPE (ON INJECTOR COVER)

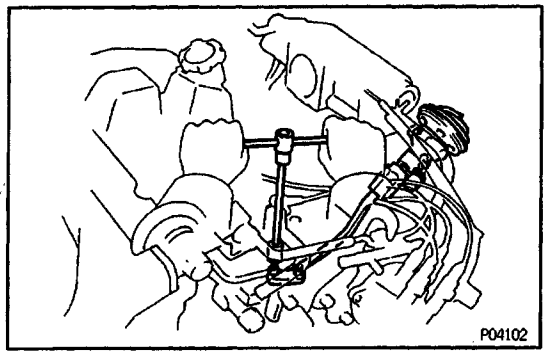

5. INSTALL EGR VALVE

(a) Install two new gaskets and the EGR valve with the four bolts.

Torque:

19 N–m (195 kgf–cm, 14 ft–lbf) for intake manifold

25 N–m (260 kgf–cm, 19 ft–lbf) for cylinder head

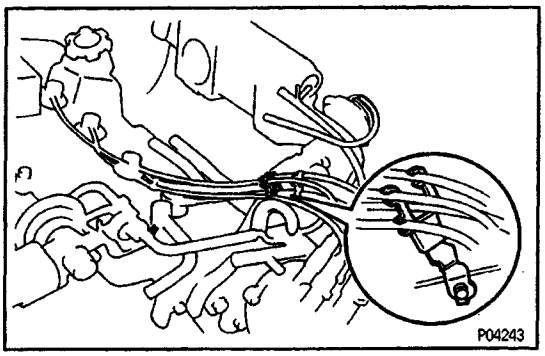

(b) Install the high–tension cord clamp to the LH engine hanger with the bolt.

(c) Connect the vacuum hose to the EGR valve.

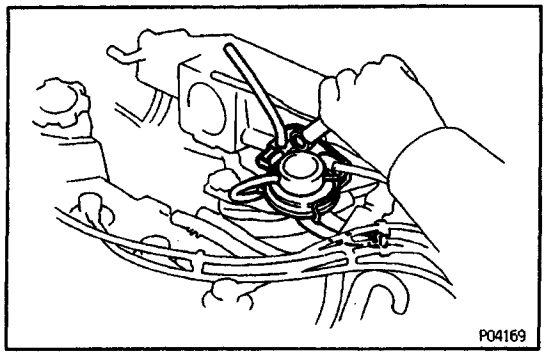

6. INSTALL VSV AND EGR VACUUM MODULATOR

(a) Install the VSV and vacuum modulator assembly with the bolt.

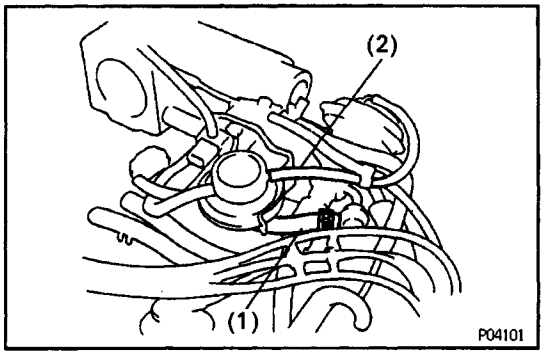

(b) Install the following hoses to the vacuum modulator:
(1) EGR hose (from EGR valve)
(2) Vacuum hose (from EGR valve)
(c) Connect the VSV connector.

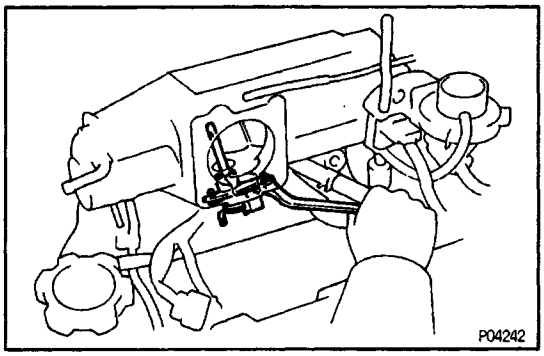

7. INSTALL COLD START INJECTOR

(a) Install a new gasket and the cold start injector with the two bolts.
Torque: 5.9 N–m (60 kgf–cm, 52 in.–lbf)
(b) Connect the cold start injector connector.

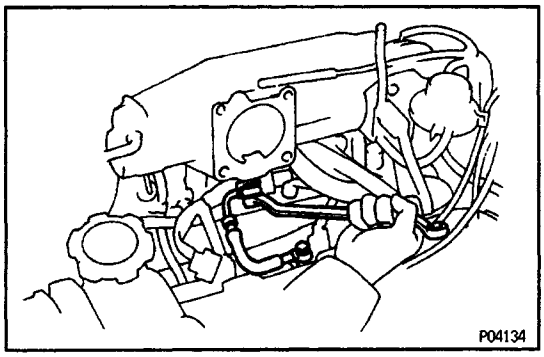

8. INSTALL COLD START INJECTOR PIPE

Install the cold start injector pipe with four new gaskets and two union bolts.
Torque: 12 N–m (125 kgf–cm, 9 ft–lbf)

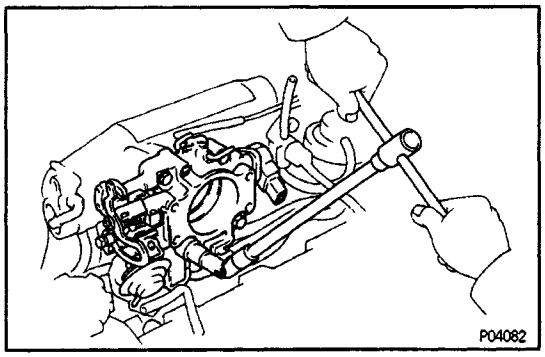

9. INSTALL THROTTLE BODY

(See Throttle Body Installation)

10. START ENGINE AND CHECK FOR FUEL LEAKS

MANIFOLD ABSOLUTE PRESSURE SENSOR (MAP)

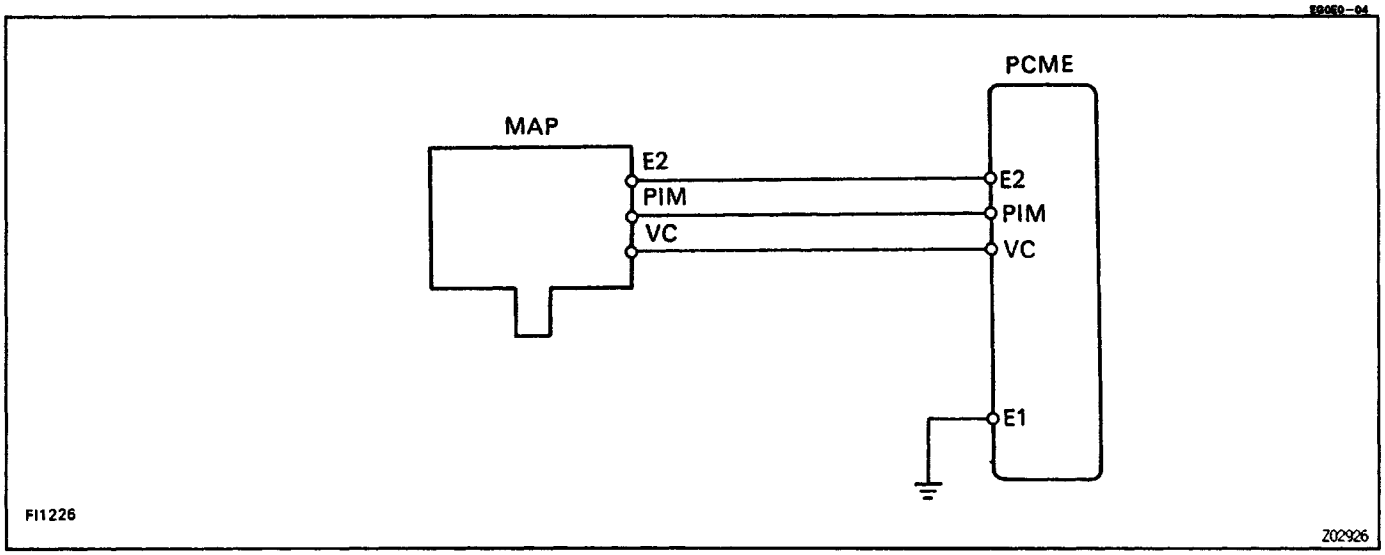

EG0Z6-01

MAP INSPECTION

1. INSPECT POWER SOURCE VOLTAGE OF MAP

(a) Disconnect the MAP connector.

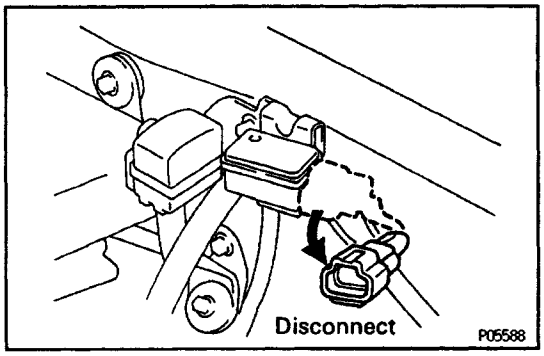

(b) Turn the ignition switch ON.

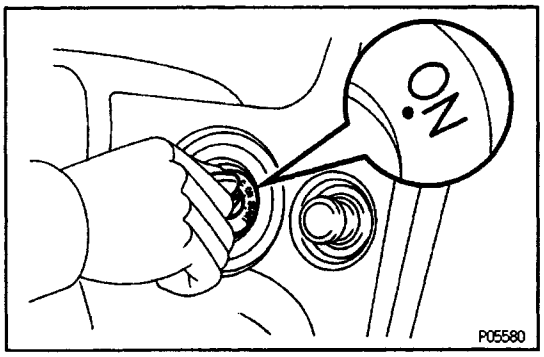

(c) Using a voltmeter, measure the voltage between connector terminals VC and E2 of the wiring harness side.

Voltage:

4.5 – 5.5 V

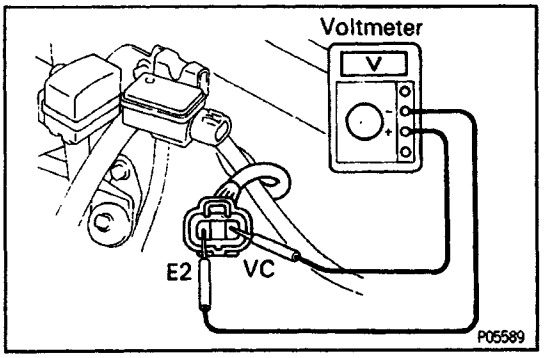

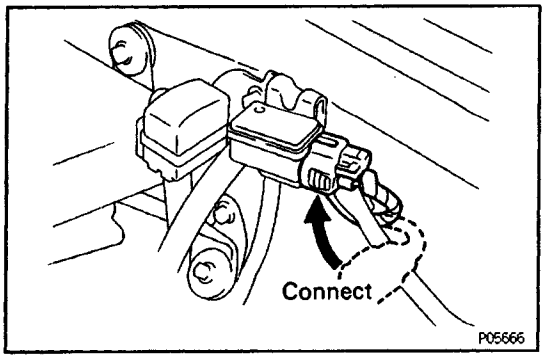

(d) Turn the ignition switch OFF.
(e) Reconnect the MAP connector.

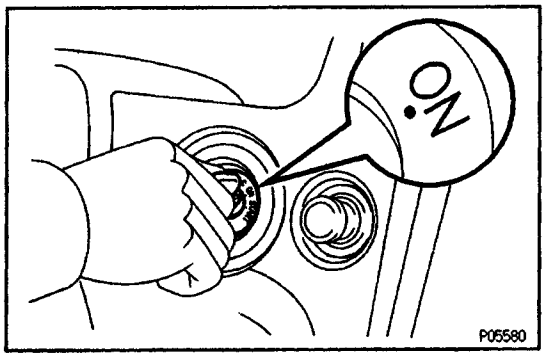

2. INSPECT SUPPLY POWER OF MAP

(a) Turn the ignition switch ON.

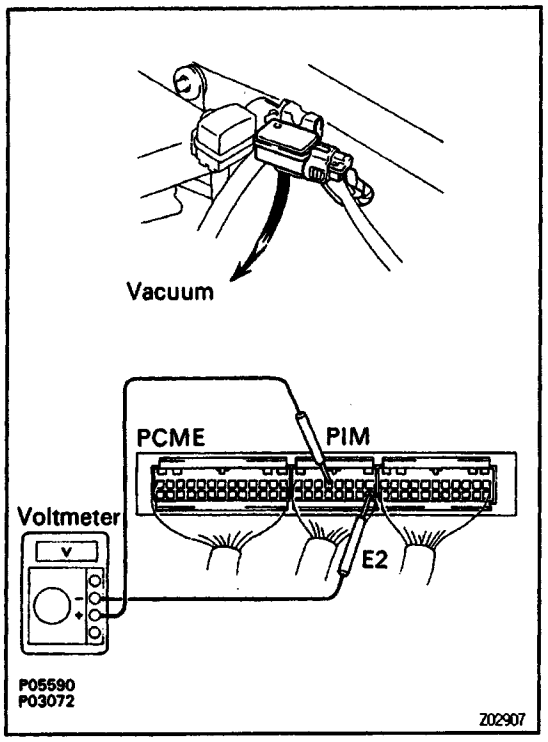

(b) Disconnect the vacuum hose on the intake manifold side.
(c) Connect a voltmeter to terminals PIM and E2 of the PCME, and measure the output voltage under ambient atmospheric pressure.
(d) Apply vacuum to the MAP in 13.3 kPa (100 mmHg, 3.94 in.Hg) segments to 66.7 kPa (500 mmHg, 19.69 in.Hg).
(e) Measure the voltage drop from step
(c) above for each segment.

Voltage drop:

Applied Vacuum kPa (mmHg) (in.Hg.)	13.3 (100) (3.94)	26.7 (200) (7.87)	40.0 (3001) (11.81)	53.3 (400) (15.75)	66.7 (500) (19.69)
Voltage drop V	0.15–0.36	0.4–0.6	0.65–0.85	0.9–1.1	1.15–1.35

V01045

MPI MAIN RELAY

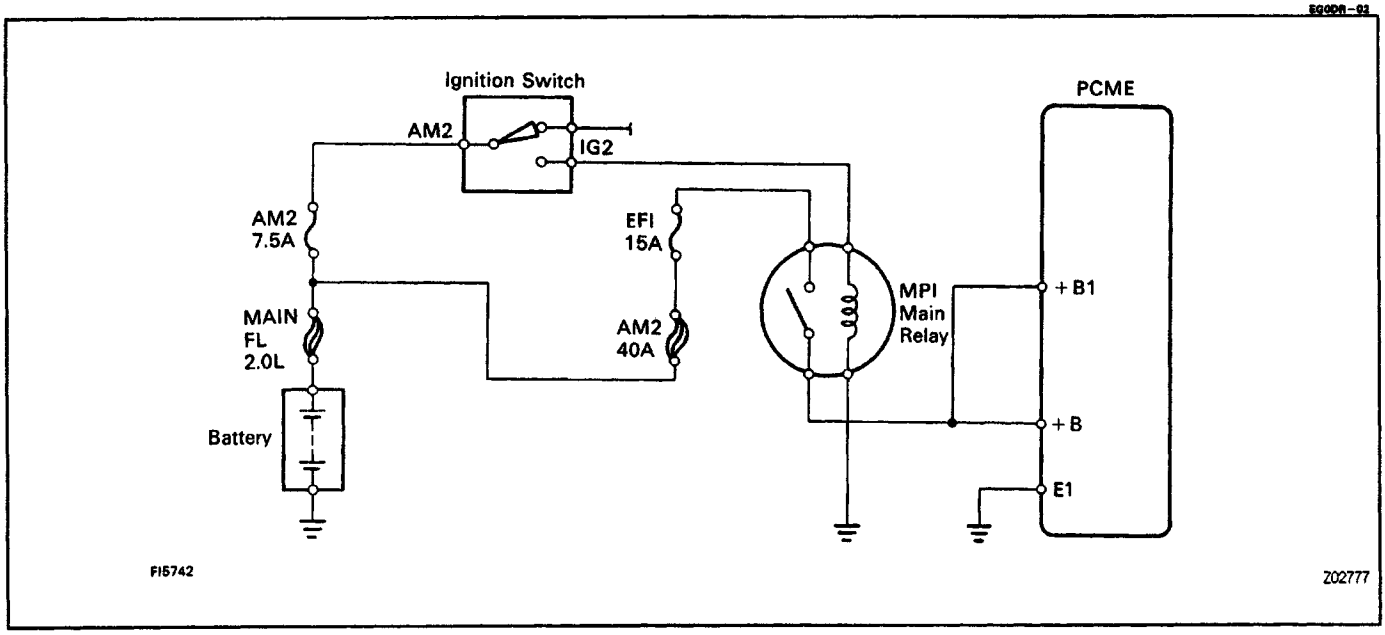

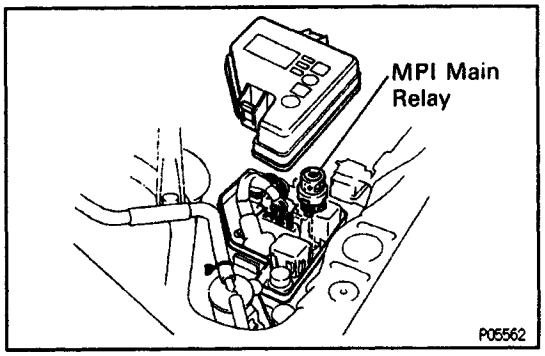

MPI MAIN RELAY ("EFI") INSPECTION

1. REMOVE MPI MAIN RELAY

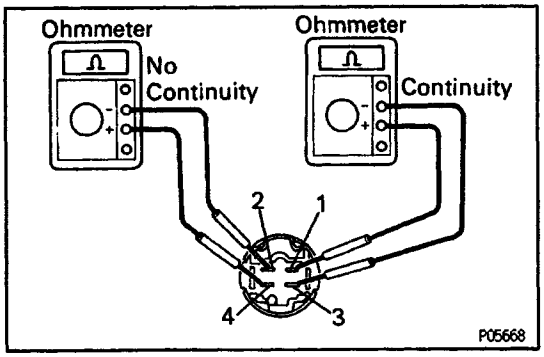

2. INSPECT MPI MAIN RELAY

A. Inspect relay continuity

(a) Using an ohmmeter, check that there is continuity between terminals 1 and 3.

(b) Check that there is no continuity between terminals 2 and 4.

If continuity is not as specified, replace the relay.

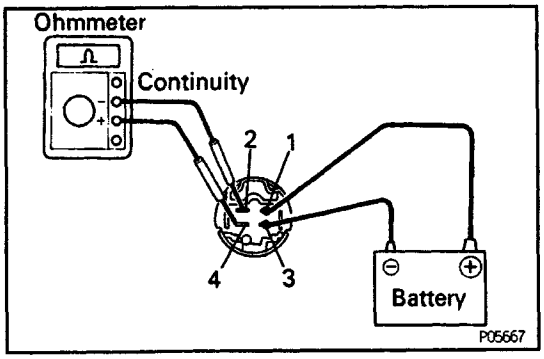

B. Inspect relay operation

(a) Apply battery voltage across terminals 1 and 3.

(b) Using an ohmmeter, check that there is continuity between the 2 and 4.

If operation is not as specified, replace the relay.

3. REINSTALL MPI MAIN RELAY

OPERATION

FUEL SYSTEM

EG0FW–03

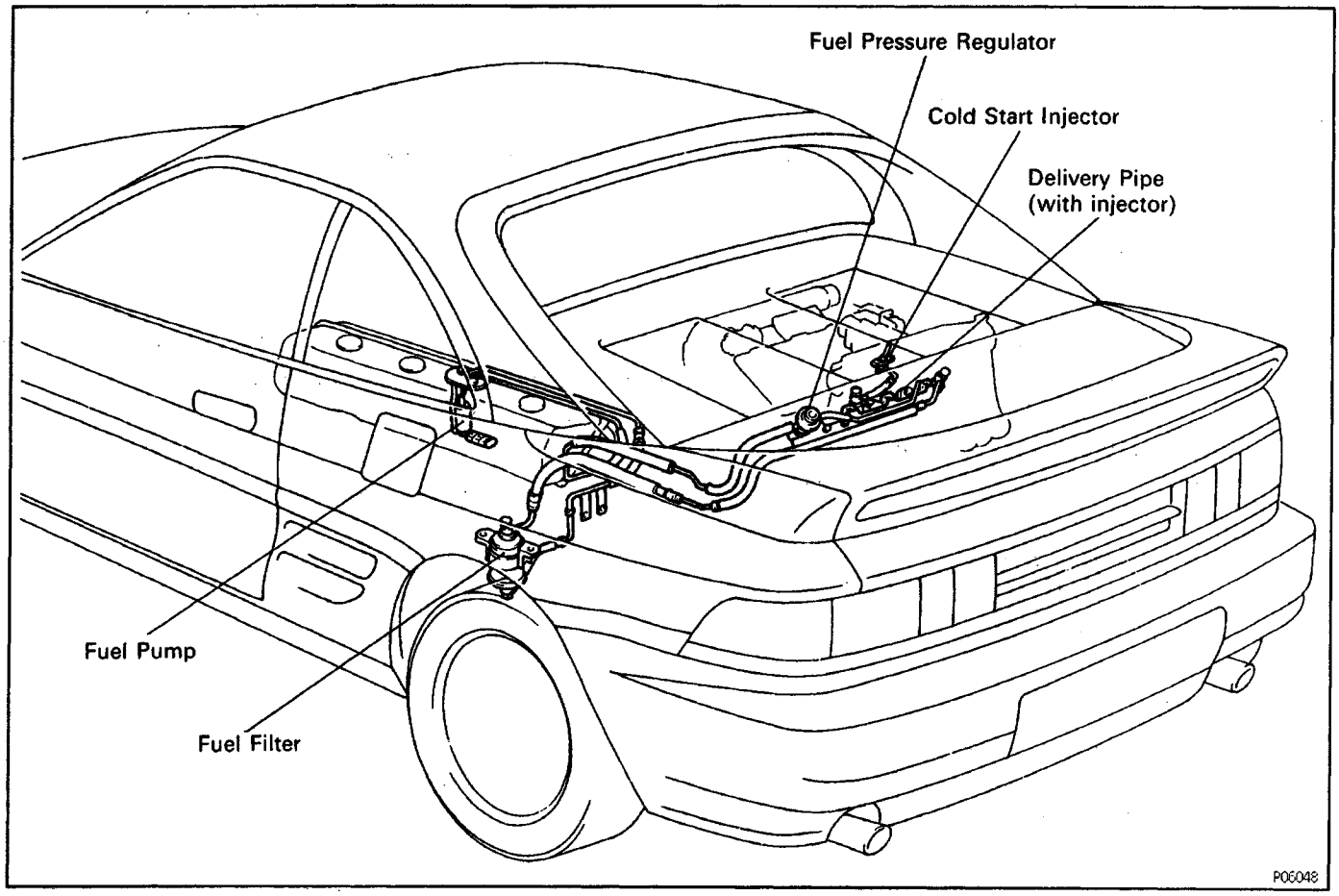

Fuel is pumped up by the fuel pump, flows through the fuel filter and is distributed to each injector and cold start injector at a set pressure maintained by the pressure regulator.

The fuel pressure regulator adjusts the pressure of the fuel from the fuel line (high pressure side) to a pressure 284 kPa (2.9 kgf/cm_2, 41 psi) higher than the pressure inside the intake manifold, and excess fuel is returned to the fuel tank through the return pipe. When the engine is hot, the fuel pressure is increased to control percolation in the fuel system and improve restartability and idling stability.

The pulsation damper absorbs the slight fluctuations in fuel pressure caused by fuel injector from the injector.

The injectors operate on input of injection signals from the PCME and inject fuel into the intake manifold.

The cold start injector operates when starting at low coolant temperature or at normal temper–ature ranges, injecting fuel into the air intake chamber to improve startability.

AIR INDUCTION SYSTEM

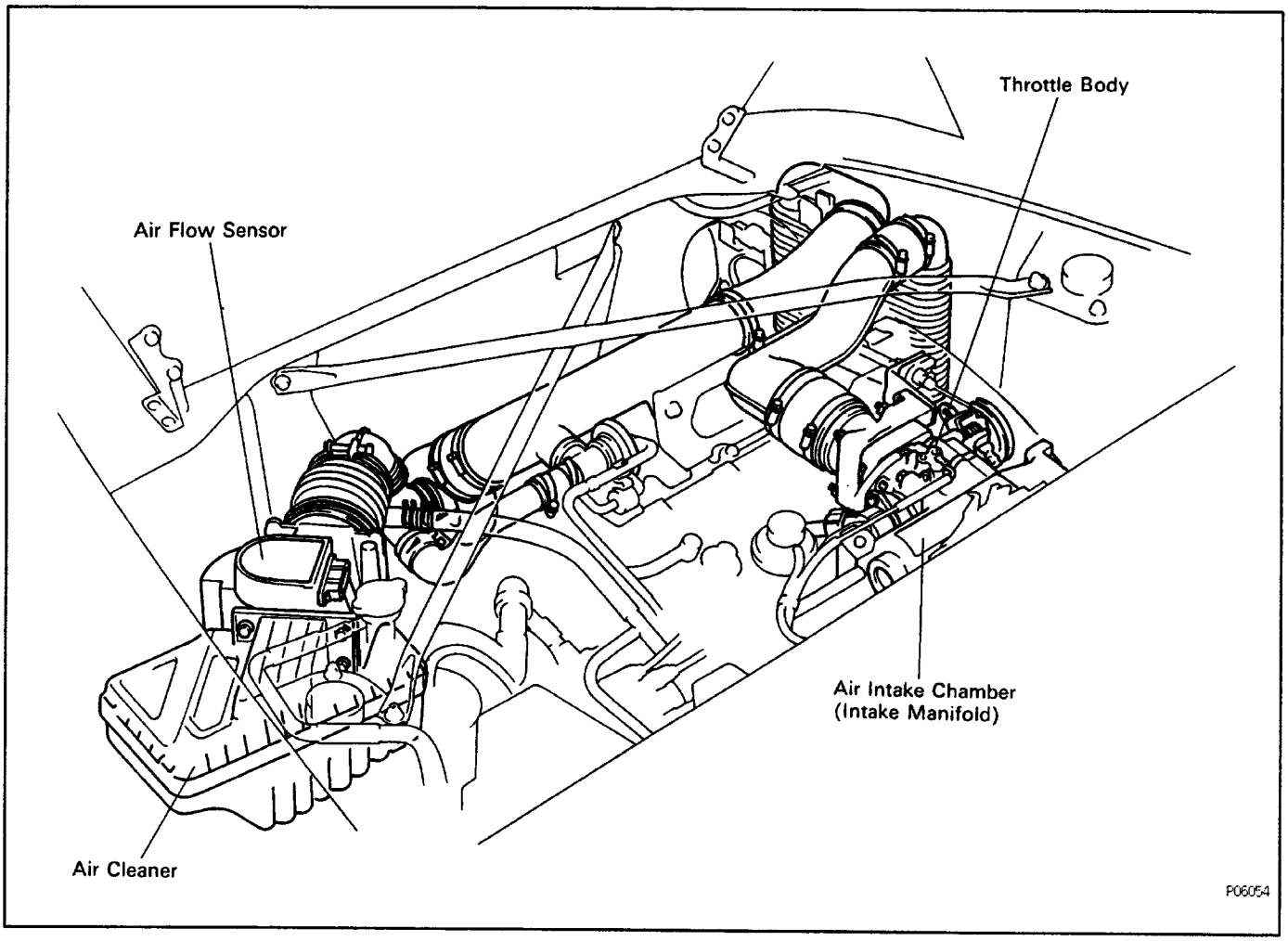

Air filtered through the air cleaner passes through the air flow sensor and the amount flowing to the air intake chamber is determined according to the throttle valve opening in the throttle body and the engine rpm.

The air flow sensor measures the intake air flow by the opening of the measuring plate in response to the volume of intake air to the engine.

Located in the throttle body is the throttle valve, which regulates the volume of intake air to the engine. Intake air controlled by the throttle valve opening is distributed from the air intake chamber to the manifold of each cylinder and is drawn into the combustion chamber.

At low temperatures the IACV opens and the air flows through the IACV and the throttle body, into the air intake chamber. During enginewarning up, even if the throttle valve is completely closed, air flows to the air intake chamber, thereby increasing the idle speed (first idle operation).

The air intake chamber prevents pulsation of the intake air, reduces the influence on the air flow sensor and increases the accuracy of the measurement of the intake air volume. It also prevents intake air interference in each cylinder.

EGOFY–03

ELECTRONIC CONTROL SYSTEM

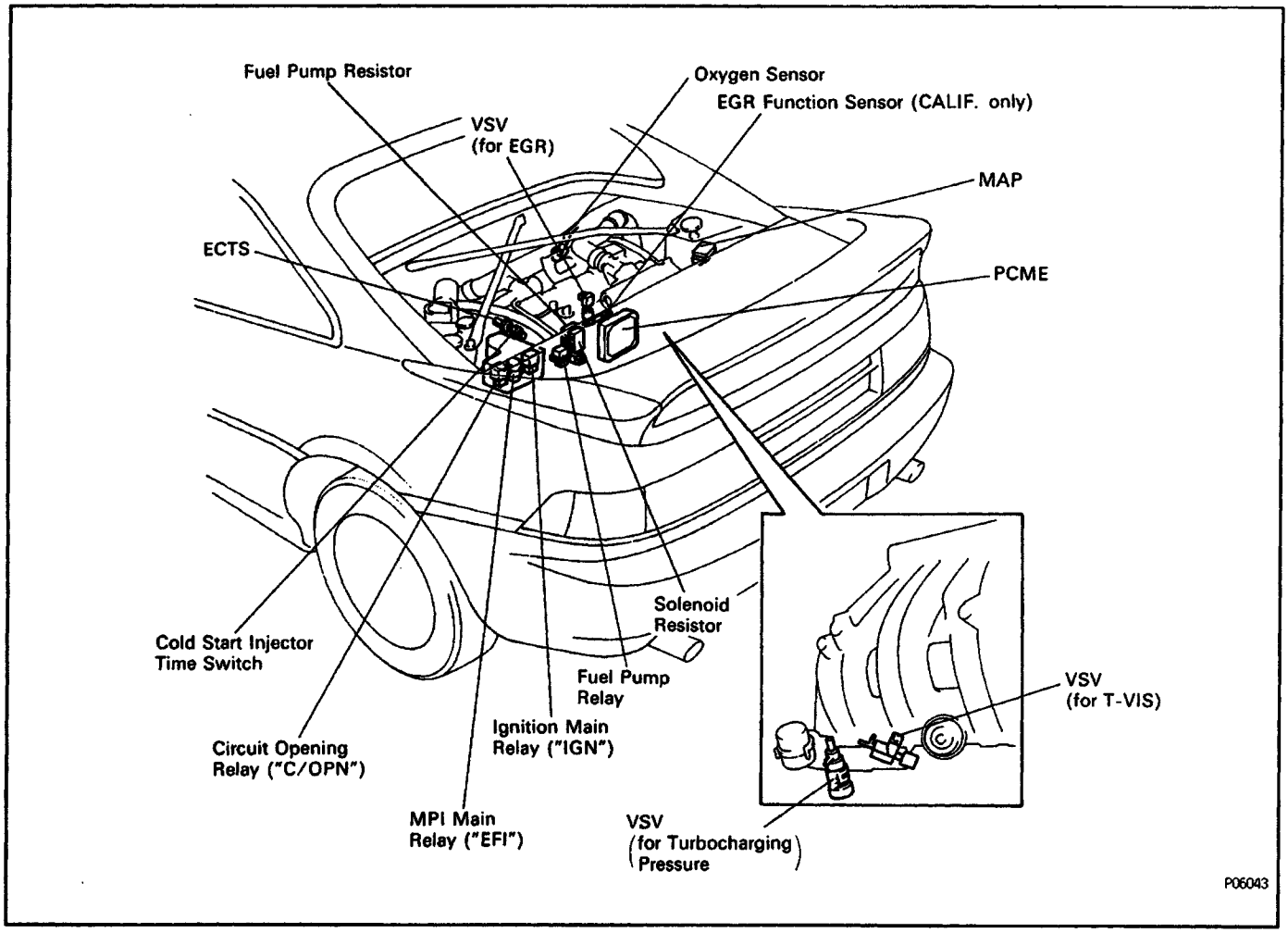

The control system consists of sensors which detect various engine conditions, and a PCME which determines the injection volume (timing) based on the signals from the sensors.
The various sensors detect the intake air volume, engine rpm, oxygen density in the exhaust gas, coolant temperature, intake air temperature and atmospheric pressure etc. and convert the information into an electrical signal which is sent to the PCME. Based on these signals, the PCME calculates the optimum ignition timing for the current conditions and operates the injectors.
The PCME not only controls the fuel injection timing, but also the self diagnostic function which records the occurrence of a malfunction, ignition timing control, idle rpm control, fuel pressure control and fuel pump control.

OXYGEN SENSOR

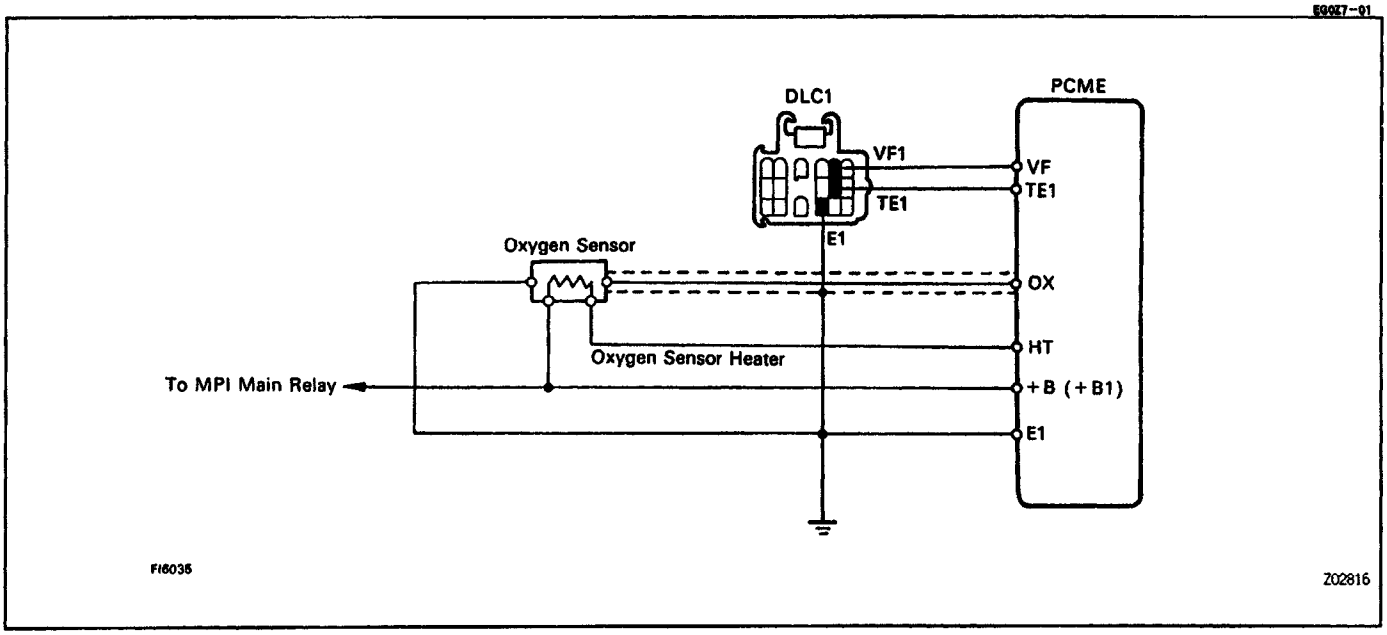

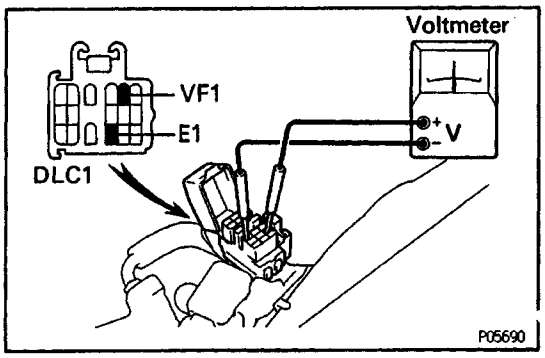

OXYGEN SENSOR INSPECTION

1. WARM UP ENGINE

Allow the engine to warm up to normal operating temperature.

2. INSPECT FEEDBACK VOLTAGE

Connect the positive (+) probe of a voltmeter to terminal VF1 of the data link connector 1, and nega–tive (–) probe to terminal

E1. Perform the test as follows:

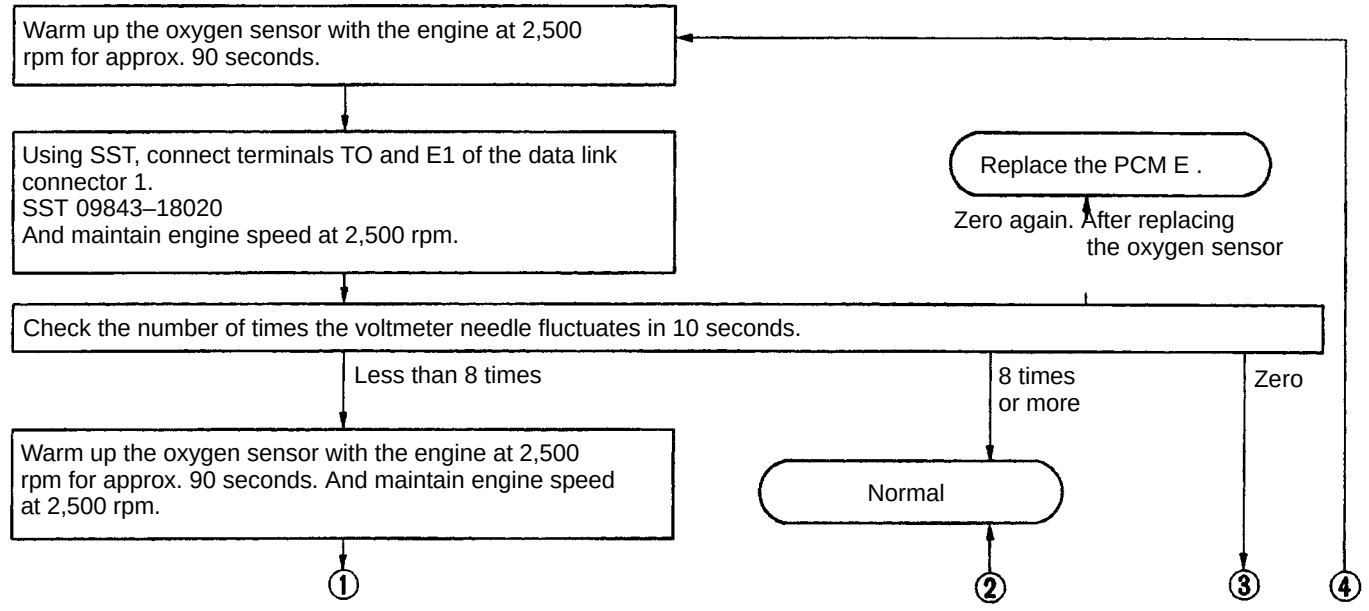

CONTINUED ON PAGE EG1–404

V00883

CONTINUED FROM PAGE EG1–403

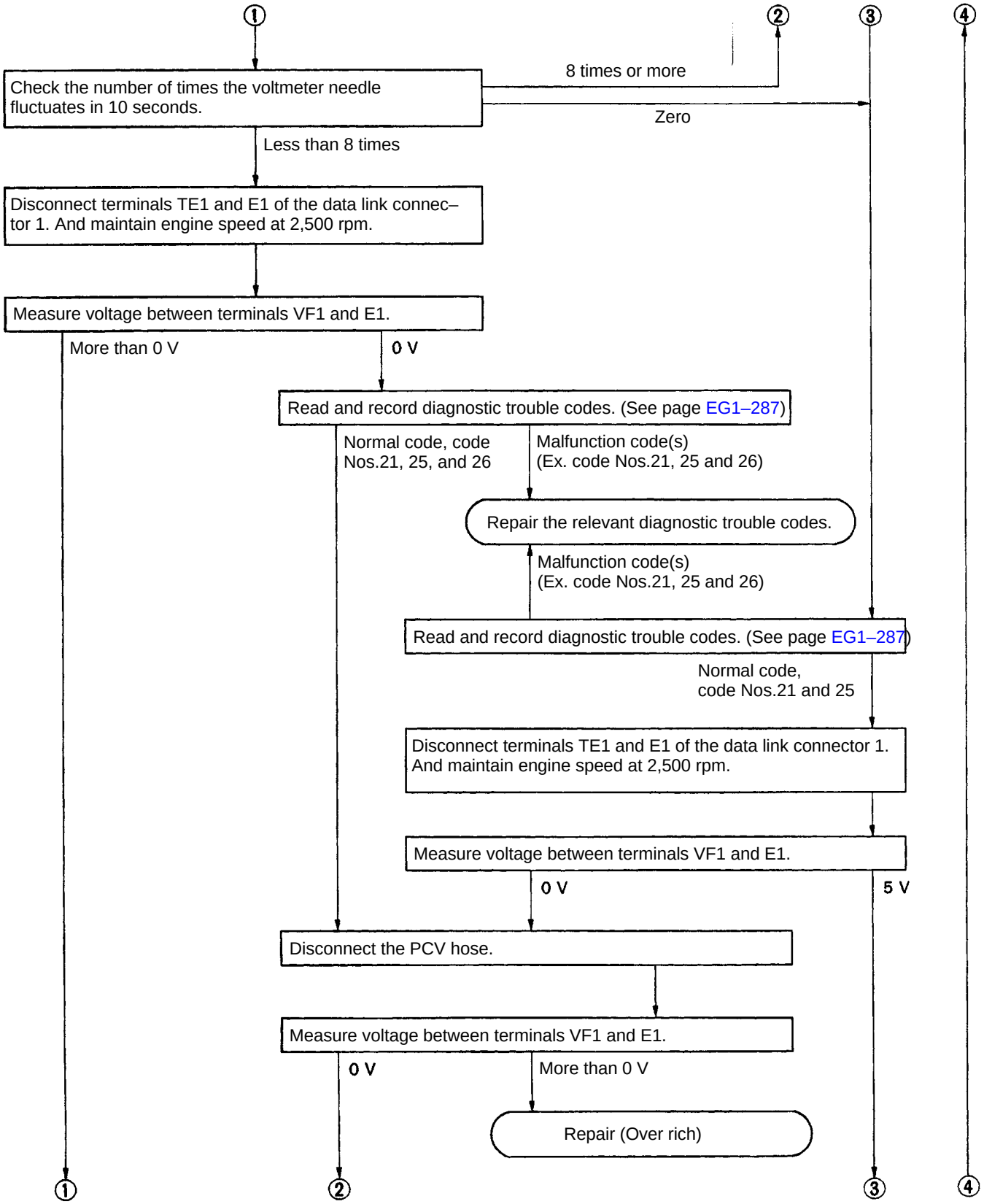

CONTINUED ON PAGE EG1–405

V00884

CONTINUED FROM PAGE EG1–404

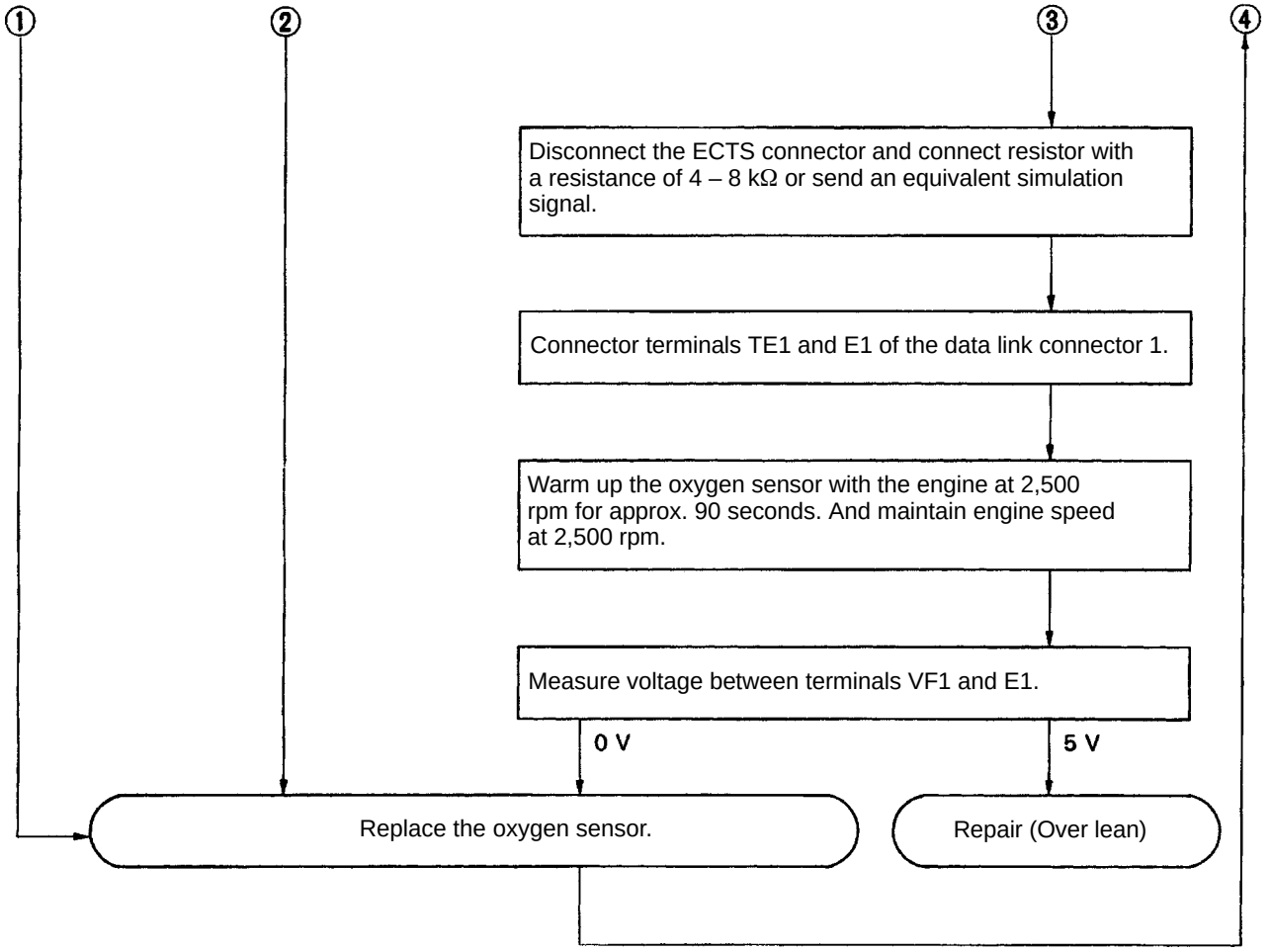

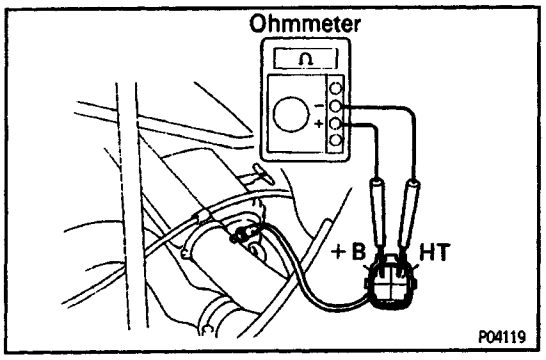

3. INSPECT HEATER RESISTANCE OF OXYGEN SENSOR

(a) Disconnect the oxygen sensor connector.

(b) Using an ohmmeter, measure the resistance between terminals +B and HT.

Resistance:

5.1 – 6.3 0 at 20˚ C (68˚ F)

If resistance is not as specified, replace the oxygen sensor.

(c) Reconnect the oxygen sensor connector.

POWERTRAIN CONTROL MODULE ENGINE (PCME)
PCME FOR REMOVAL AND INSTALLATION

EG0S8–02

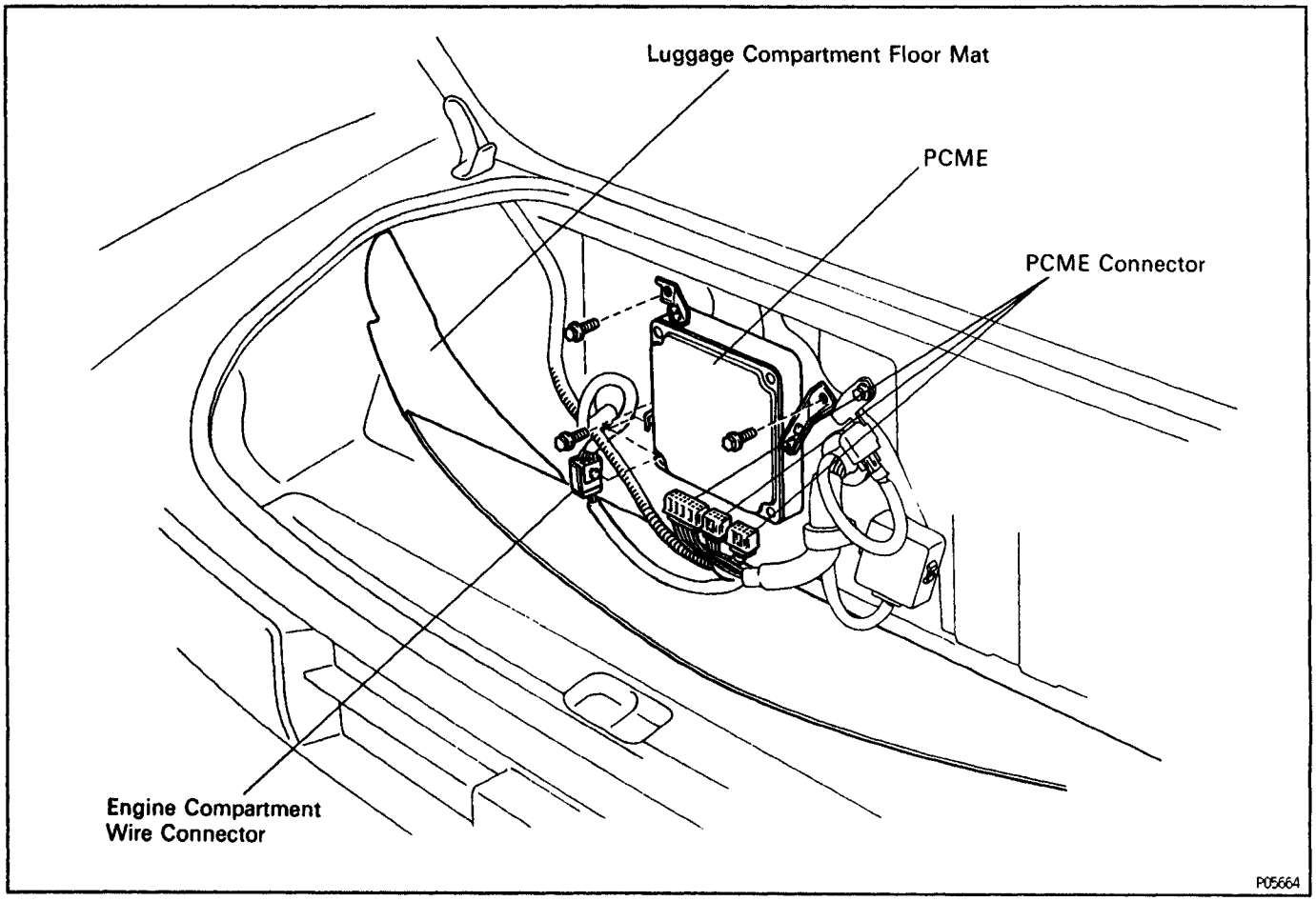

EG0Z9–01

PCME INSPECTION

(See Components for Removal and Installation)

HINT: The SMPI circuit can be checked by measuring the resistance and voltage at the wiring connectors of the PCM E.

1. DISCONNECT FRONT SIDE OF LUGGAGE COMPARTMENT FLOOR MAT FROM PARTITION PANEL

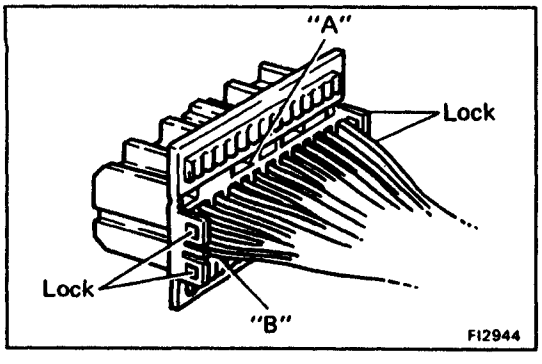

2. PREPARATION

(a) Disconnect the three connectors from the PCME.

(b) Remove the locks as shown in the illustration so that the tester probe(s) can easily come in.

NOTICE: Pay attention to sections A and B in the illus–tration which can easily broken.

(c) Reconnect the three connectors to the PCME.

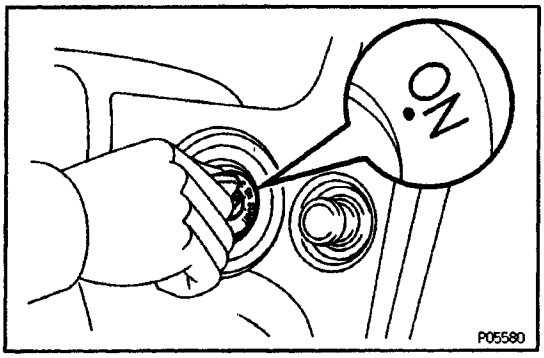

3. INSPECT VOLTAGE OF PCME

(a) Turn the ignition switch ON.

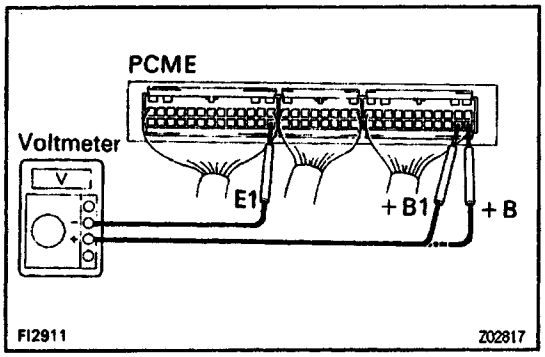

(b) Measure the voltage between each terminal of the wiring connectors.

HINT:

- Perform all voltage measurements with the con–nectors connected.
- Verify that the battery voltage is 1 1 V or more when the ignition switch is ON.

Voltage at PCME Wiring Connectors

Terminals	Condition		STD voltage (V)
+B, +B1 – E1	IG SW ON		9 – 14
BATT – E1			9 – 14
IDL – E2	IG SW ON	Throttle valve open	9 – 14
VTA – E2	IG SW ON	Throttle valve fully closed (Throttle opener must be cancelled first)	0.3 – 0.8
VTA – E2	IG SW ON		3.2 – 4.9
VC – E2	IG SW ON	Throttle valve fully open	4.5 – 5.5
VS – E2	IG SW ON	Measuring plate fully closed	4.0 – 5.5
VS – E2	IG SW ON	Measuring plate fully open	0.2 – 0.5
VS – E2	Idling		1.6 – 4.1
VS – E2	3,000 rpm		1.0 – 2.0
#1, #2, #3, #4 – E01, E02	IG SW ON	Throttle valve fully closed (Throttle opener must be cancelled first)	9 – 14
THA – E2	IG SW ON	Intake air temp. 20°C (68°F)	0.5 – 3.4
THW – E2	IG SW ON	Coolant temp. 80°C (176°F)	0.2 – 1.0
STA – E1	Cranking		6 V or more
IGT – E1	Idling		Pulse generation
RSC, RSO – E1	IG SW ON	PCME connectors disconnected	9 – 14
W – E1	No trouble ("CHECK" engine warning light off) and engine running		9 – 14
PIM – E2	IG SW ON		2.5 – 4.5
AC – E1	IG SW ON	Air conditioning ON	9 – 14
*1TVIS – E1	IG SW ON	Throttle valve fully closed (Throttle opener must be cancelled first)	2.0 or less
*1TVIS – E1	IG SW ON	Throttle valve open	9 – 14
*2TVIS – E1	Idling		2.0 or less
*2TVIS – E1	4,200 rpm or more		9 – 14
TE1 – E1	IG SW ON	DLC1 TE1–E1 Not connected	9 – 14
TE1 – E1	IG SW ON	DLC1 TE1–E1 connected	0.5 or less

PCME Terminals

*1 w/ Regulator Gasoline
*2 w/ Premium Gasoline

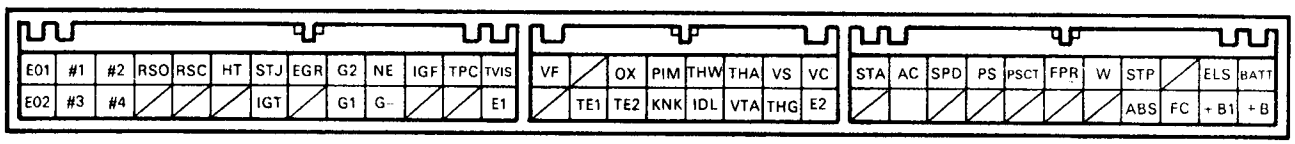

FI2796

V00998

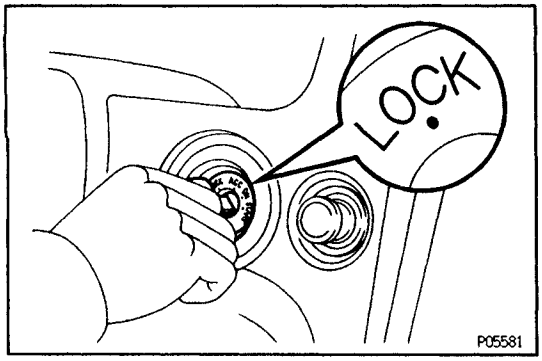

4. INSPECT RESISTANCE OF PCME

(a) Turn the ignition switch OFF.

(b) Disconnect the three connectors from the PCME.

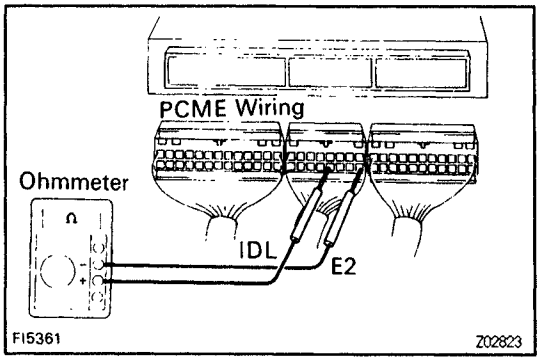

(c) Measure the resistance between each terminal of the wiring connectors.

NOTICE:

- **Do not touch the PCME terminals.**
- **The tester probe should be inserted in the wiring connector from the wiring side.**

Resistance of PCME Wiring Connectors

Terminals	Condition	STD resistance (Ω)
IDL – E2	Throttle valve open	Infinity
	Throttle valve fully closed (Throttle opener must be cancelled first)	2,300 or less
VTA – E2	Throttle valve fully open	2,000 – 10,200
	Throttle valve fully closed (Throttle opener must be cancelled first)	200 – 5,700
VC – E2	Measuring plate fully closed	2,500 – 5,900
VS – E2		200 – 600
	Measuring plate fully open	20 – 1,200
THA – E2	Intake air temp. 20°C (68°F)	2,000 – 3,000
THW – E2	Coolant temp. 80°C (176°F)	200 – 400
G1 – G– G2	Cold (–10°C (14°F) to 50°C (104°F))	125 – 200
	Hot (50°C (104°F) to 1 00°C (2127))	160 – 235
NE – G–	Cold (–10°C (14°F) to 50°C (104°F)N	155 – 250
	Hot (50°C (104°F) to 100°C (212°F))	190 – 290
RSC – +B RSO – +B1		17.7 – 23.9

PCM E Terminals

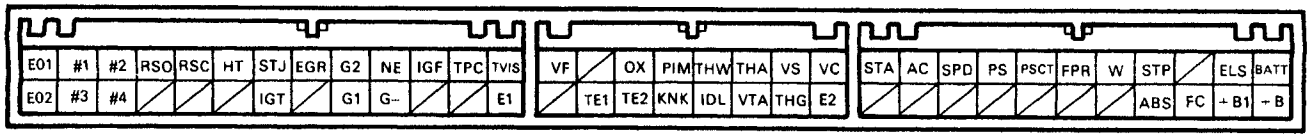

PRECAUTION

1. Before working on the fuel system, disconnect the cable from negative (–) terminal of the battery.
HINT: Any diagnostic trouble code retained by the computer will be erased when the battery terminal is removed.
Therefore, if necessary, read the diagnosis before removing the terminal.

2. Do not smoke or work near an open flame when working on the fuel system.

3. Keep gasoline away from rubber or leather parts.

EG0XL–01

MAINTENANCE PRECAUTIONS

1. CHECK CORRECT ENGINE TUNE–UP
(See Tune–Up under Engine Mechanical)

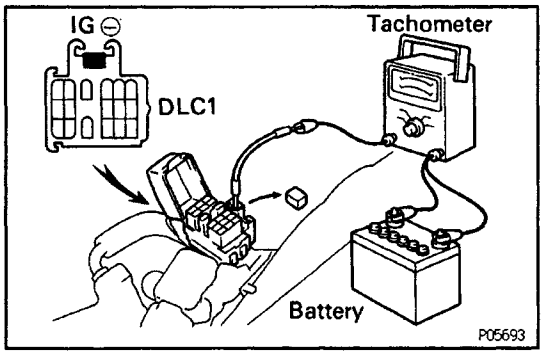

2. PRECAUTION WHEN CONNECTING GAUGE

(a) Use battery as the power source for the timing light, tachometer, etc.

(b) Connect the tester probe of a tachometer to the ter–minal IG– of the data link connector 1.

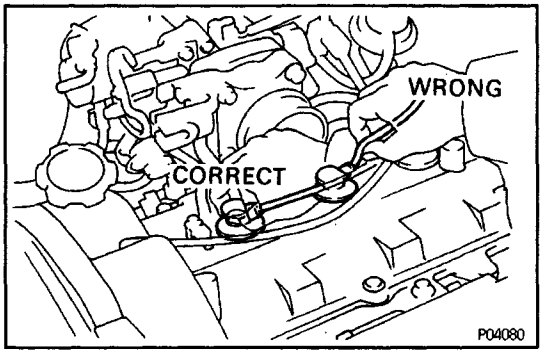

3. IN EVENT OF ENGINE MISFIRE, FOLLOWING PRECAUTIONS SHOULD BE TAKEN

(a) Check proper connection of battery terminals, etc.

(b) Handle high–tension cords carefully.

(c) After repair work, check that the ignition coil termi–nals and all other ignition system lines are reconne–cted securely.

(d) When cleaning the engine compartment, be especially careful to protect the electrical system from water.

4. PRECAUTIONS WHEN HANDLING OXYGEN SENSOR

(a) Do not allow oxygen sensor to drop or hit against an object.

(b) Do not allow the sensor to come into contact with water.

IF VEHICLE IS EQUIPPED WITH MOBILE RADIO SYSTEM (HAM, CB, ETC.)

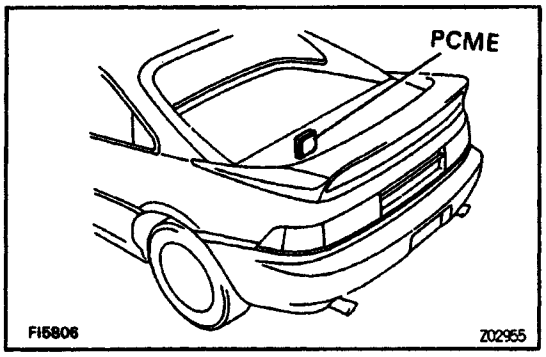

The PCME has been designed so that it will not be affected by outside interference.

However, if your vehicle is equipped with a CB radio transceiver, etc. (even one with about 10 W output), it may, at times, have an affect upon PCME operation, especially if the antenna and feeder are installed nearby.

Therefore, observe the following precautions:

1. Install the antenna as far away as possible from the PCME. The PCME is located on the partition panel into rear luggage compartment so the antenna should be installed at the rear side of the vehicle.
2. Keep the antenna feeder as far away as possible from the PCME wires–at lease 20 cm (7.87 in.)–and, es–pecially, do not wind them together.
3. Check that the feeder and antenna are properly adj–usted.
4. Do not equip your vehicle with a powerful mobile radio system.
5. Do not open the cover or the case of the PCME unless absolutely necessary. (If the IC terminals are touched, the IC may be destroyed by static electricity.)

AIR INDUCTION SYSTEM EGOCM–01

1. Separation of the engine oil dipstick, oil filler cap, PCV hose, etc. may cause the engine to run out of turn.
2. Disconnection, looseness or cracks in the parts of the air induction system between the throttle body and cylinder head will allow air suction and cause the engine to run out of tune.

ELECTRONIC CONTROL SYSTEM EGOXN–01

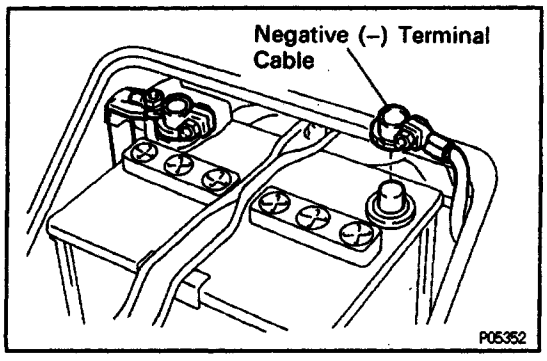

1. Before removing SMPI wiring connectors, terminals, etc., first disconnect the power by either turning the ignition switch OFF or disconnecting the battery ter–minals.

   HINT: Always check the diagnostic trouble code before disconnecting the battery terminal.

2. When installing the battery, be especially careful not to incorrectly connect the positive (+) and negative (–) cables.
3. Do not permit parts to receive a severe impact during removal or installation. Handle all SMPI parts care–fully, especially the PCME.
4. Do not be careless during troubleshooting as there are numerous transistor circuits and even slight terminal contact can further troubles.
5. Do not open the PCME cover.
6. When inspecting during rainy weather, take care to prevent entry of water. Also, when washing the engine compartment, prevent water from getting on the SMPI parts and wiring connectors.
7. Parts should be replaced as an assembly.

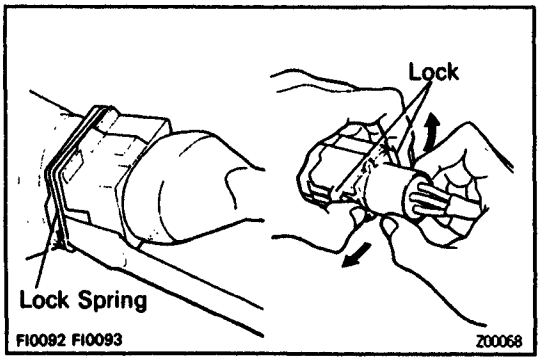

8. Care is required when pulling out and inserting wiring connectors.
(a) Release the lock and pull out the connector, pulling on the connectors.

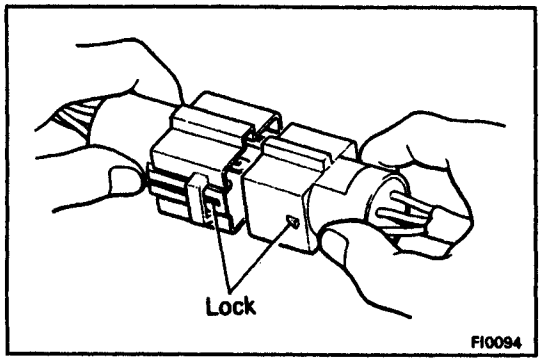

(b) Fully insert the connector and check that it is locked.

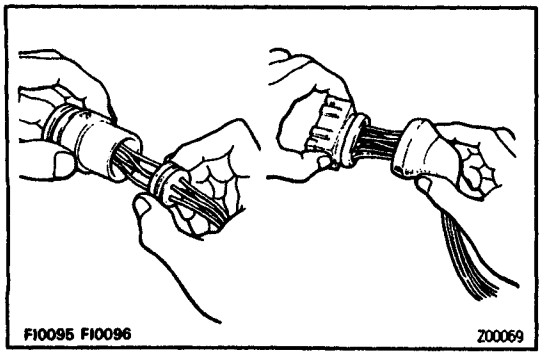

9. When inspecting a connector with a volt/ohmmeter.
(a) Carefully take out the water–proofing rubber if it is a water–proof type connector.

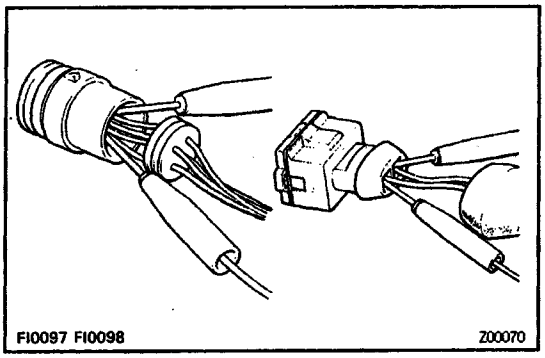

(b) Insert the test probe into the connector from wiring side when checking the continuity, amperage or voltage.
(c) Do not apply unnecessary force to the terminal.
(d) After checking, install the water–proofing rubber on the connector securely.

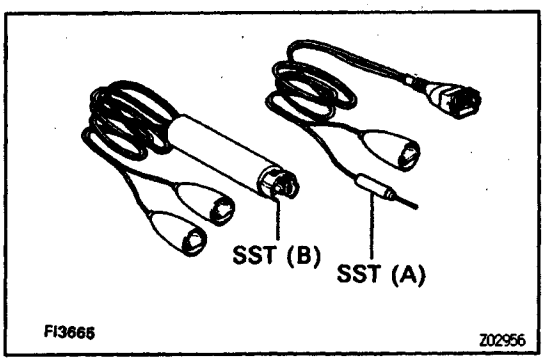

10. Use SST for inspection or test of the injector, cold start injector or its wiring connector.
SST 09842–30050 (A) for cold start injector
SST 09842–30060 (B) for injector

EG0XP–01

FUEL SYSTEM

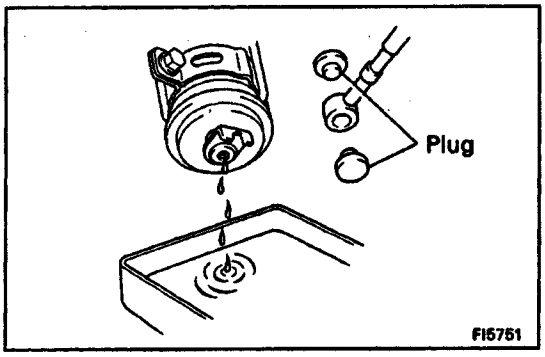

1. When disconnecting the high fuel pressure line, a large amount of gasoline will spill out, –so observe the following procedures:
(a) Put a container under the connection.
(b) Slowly loosen the connection.
(c) Disconnect the connection.
(d) Plug the connection with a rubber plug.

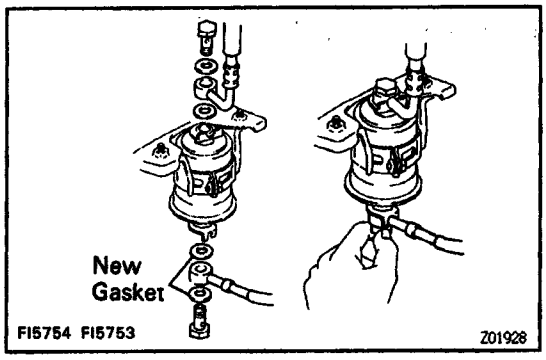

2. When connecting the flare nut or union bolt on the high pressure pipe union, observe the following procedures:
(Union Bolt Type)
(a) Always use a new gasket.
(b) Tighten the union bolt by hand.
(c) Tighten the union bolt to the specified torque.
Torque: 29 N–m (300 kgf–cm, 22 ft–lbf)
(Flare Nut Type)
(a). Apply a light coat of engine oil to the flare and tighten the flare nut by hand.

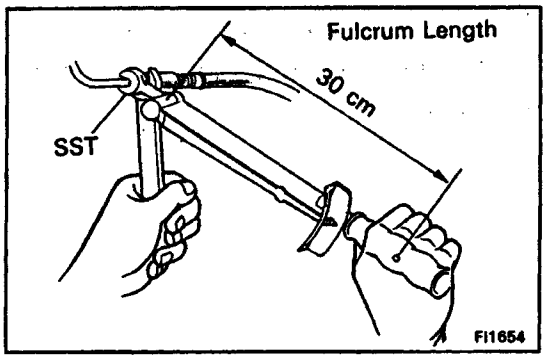

(b) Using SST, tighten the flare nut to the specified torque.
SST 09631–22020
Torque: 30 N–m (310 kgf–cm, 22 ft–lbf)
HINT: Use a torque wrench with a fulcrum length of 30 cm (111.81 in.).

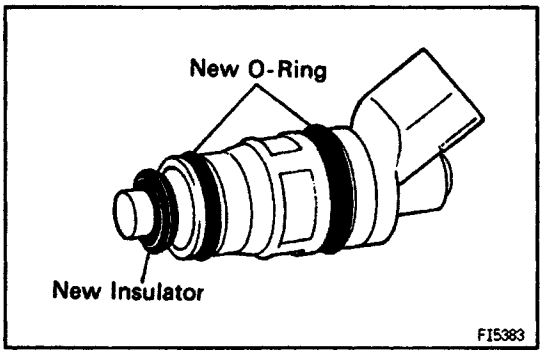

3. Observe the following precautions when removing and installing the injectors.
(a) Never reuse the 0–ring.
(b) When placing a new O –ring on the injector, take care not to damage it in any way.
(c) Coat a new O–ring with spindle oil or gasoline before installing–never use engine, gear or brake oil.

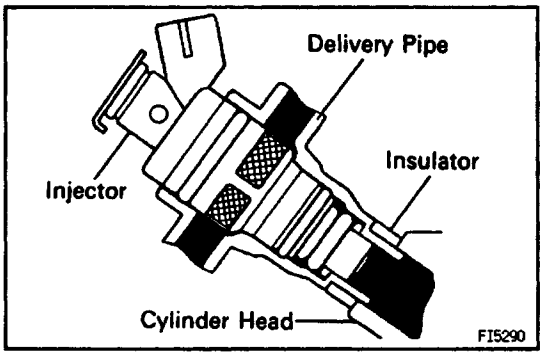

4. Install the injector to delivery pipe and cylinder head as shown in the illustration.

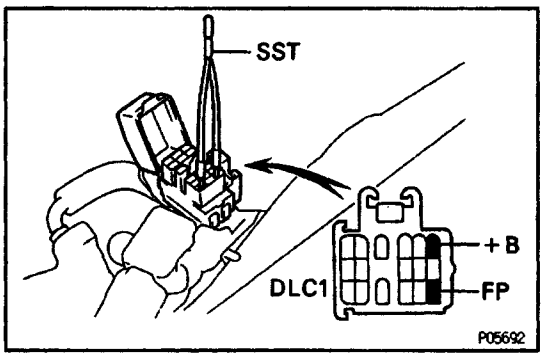

5. Check that there are no fuel leaks after performing any maintenance on the fuel system.
(a) Using SST, connect terminals +B and FP of the data link connector 1.
SST 09843–18020

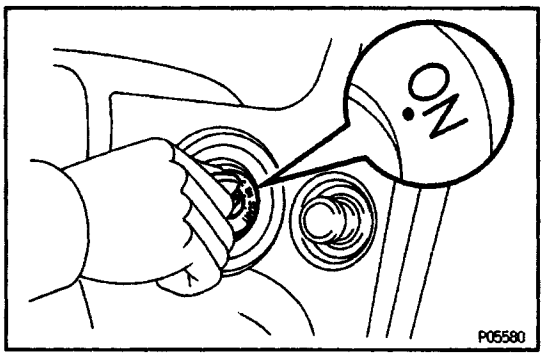

(b) Turn the ignition switch ON.
NOTICE: Do not start the engine.

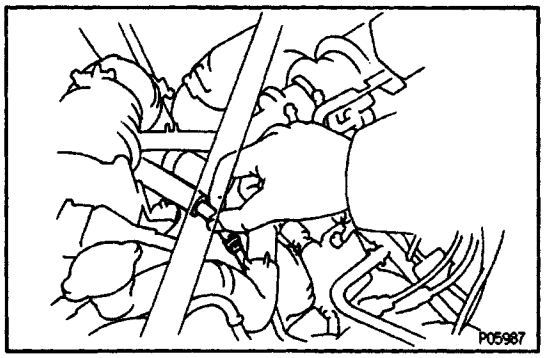

(c) When the fuel return hose is pinched, the pressure within high pressure line will rise to approx. 392 kPa (4kgf/cm_2, 57 psi). In this state, check to see that there are no leaks from any part of the fuel system.
NOTICE: Always pinch the hose. avoid bending as it may cause the hose to crack.

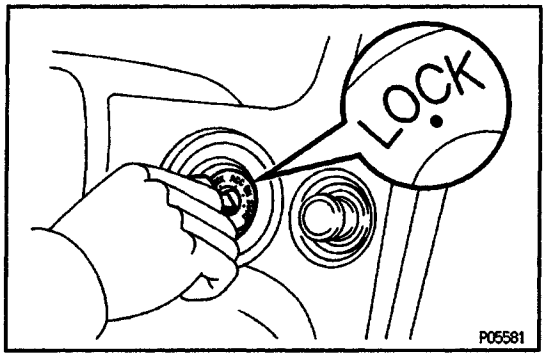

(d) Turn the ignition switch OFF.

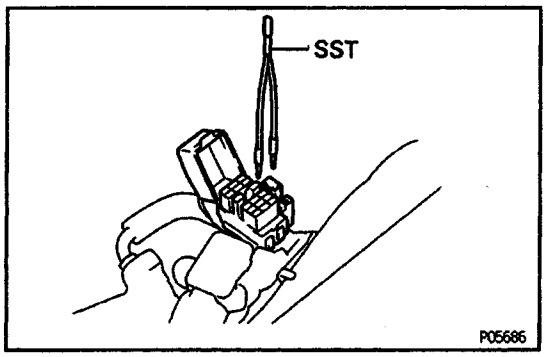

(e) Remove the SST from the data link connector 1.
SST 09843–18020

PREPARATION

SST (SPECIAL SERVICE TOOLS)

EGOCF–02

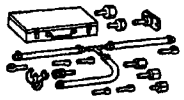	09268–41045 Injection Measuring Tool Set	
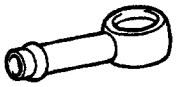	(09268–41080) No.6 union	
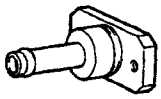	(09266–41090) No.7 union	
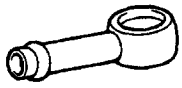	(90405–09015) No.1 union	
	09266–45012 EFI Fuel Pressure Gauge	
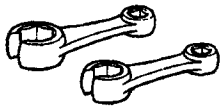	09631–22020 Power Steering Hose Nut 14 x 17 mm Wrench Set	Fuel line flare nut
	09842–30050 Wire 'A' EFI Inspection	Cold start injector
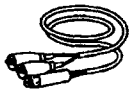	09842–30060 Wire "E" EFI Inspection	Injector
	09843–18020 Diagnosis Check Wire	

RECOMMENDED TOOLS

EGOCG–01

	09082–00015 TOYOTA Electrical Tester	
	09200–00010 Engine Adjust Kit	
	09258–00030 Hose Plug Set	Plug for the vacuum hose, fuel hose etc.

EGOCN–01

EQUIPMENT

Graduated cylinder	Injector
Carburetor cleaner	Throttle body
Sound scope	Injector
Tachometer	
Torque wrench	
Vacuum gauge	
Soft brush	Throttle body

SERVICE SPECIFICATIONS

SERVICE DATA

Fuel pressure regulator	Fuel pressure	at no vacuum	226 – 265 kPa (2.3 – 2.7 kgf/cm², 33 – 38 psi)
Fuel pump	Resistance		0.2 – 3.0 Ω
Cold start injector	Resistance Fuel leakage		2 – 4 Ω One drop or less per minute
Injector	Resistance Injection volume Difference between each cylinder Fuel leakage		Approx. 2 – 4 Ω 95 – 120 cm³ (5.8 – 7.3 cu in.) per 15 sec. 5 cm³ (0.3 cu in.) or less One drop or less per minute
Air flow sensor	Resistance	Terminals	Resistance
		VS – E2	200 – 600 Ω (Measuring plate fully closed)
		VS – E2	20 – 1,200 Ω (Measuring plate fully open)
		VC – E2	200 – 400 Ω
		THA – E2	10 – 20 kΩ at –20°C (–4°F)
		THA – E2	4 – 7 kΩ at 0°C (32°F)
		THA – E2	2 – 3 kΩ at 20°C (68°F)
		THA – E2	0.9 – 1.3 kΩ at 40°C (104°F)
		THA – E2	0.4 – 0.7 kΩ at 60°C (140°F)
Throttle body	Throttle body fully closed angle, Throttle opener setting speed		6° 900 – 1,900 rpm (w/ Cooling fan OFF)
Throttle position sensor	Clearance between stop screw and lever	Terminal	Resistance
	0 mm (0 in.)	VTA – E2	0.2 – 5.7 kΩ
	0.50 mm (0.020 in.)	IDL–E2	2.3 kΩ or less
	0.70 mm (0.028 in.)	IDL – E2	Infinity
	Throttle valve fully open	VTA – E2	2.0 – 10.2 kΩ
		VC – E2	2.5 – 5.9 kΩ
IACV	Resistance	+ B – RSC or RSO	17.7 – 23.9 Ω
Cold start injector time switch	Resistance	STA – STJ	30 – 50 Ω below 15°C (59°F)
		STA – STJ	70 – 90 Ω above 30°C (86°F)
		STA – Ground	30 – 90 Ω
ECTS	Resistance		10 – 20 kΩ at 20°C (–4°F) 4 – 7 kΩ at 0°C (32°F) 2 – 3 kΩ at 20°C (68°F) 0.9 – 1.3 kΩ at 40°C (104°F) 0.4 – 0.7 kΩ at 60°C (140°F) 0.2 – 0.4 kΩ at 80°C (176°F)
Solenoid resistor	Resistance	–+B – #10, #20, #30 or #40	4 – 6 Ω
Fuel pump resistor	Resistance (Cold)		Approx. 0.73 Ω
VSV (for T – VIS)	Resistance (Cold)		33 – 39 Ω
VSV (for Turbocharging pressure)	Resistance (Cold)		24 – 30 Ω

VSV (for EGR)	Resistance (Cold)		33 – 39 Ω
A/C idle–up valve	Resistance (Cold)		30 – 34 Ω
EGR function sensor (Calif. only)	Resistance		69 – 89 kΩ at 50°C (122°F) 11 – 15 kΩ at 100°C (212°F) 2 – 4 kΩ at 150°C (302°F)
Oxygen sensor	Heater coil resistance		5.1 – 6.3 Ω at 20°C (68°F)
PCME	Condition	Terminals	Voltage
	IG SW ON	+B–E1	9 – 14 V
	IG SW ON	+B1 – E1	9 – 14 V
	–	BATT – E1	9 – 14 V
	IG SW ON – Throttle valve open	IDL – E2	9 – 14 V
	IG SW ON – Throttle valve fully closed (Throttle opener must be cancelled first)	VTA – E2	0.3 – 0.8 V
	IG SW ON – Throttle valve fully open	VTA – E2	3.2 – 4.9 V
	IG SW ON	VC – E2	4.5 – 5.5 V
	IG SW ON – Measuring plate fully closed	VS – E2	4.0 – 5.5 V
	IG SW ON – Measuring plate fully open	VS – E2	0.2 – 0.5 V
	Idling	VS – E2	1.6 – 4.1 V
	3,000 rpm	VS – E2	1.0 – 2.0 V
	IG SW ON	#1, #2, #3 or #4 – E01	9 – 14 V
	IG SW ON	#1, #2, #3 or #4 – E02	9 – 14 V
	IG SW ON – Intake air temp. 20˚C (68˚F)	THA – E2	0.5 – 3.4 V
	IG SW ON – Coolant temp. 80˚ C (176˚ F)	THW – E2	0.2 – 1.0 V
	Cranking	STA – E1	6 V or more
	Idling	IGT – E1	Pulse generation
	IG SW ON – PCM E connectors disconnected	RSC – E1	9 – 14 V
	IG SW ON – PCM E connectors disconnected	RSO – E1	9 – 14 V
	No trouble (”CHECK” engine warning light off) and engine running	W – E1	9 – 14 V
	IG SW ON	PIM – E2	2.5 – 4.5 V
	IG SW ON – Air conditioning ON	AC – E1	9 – 14 V
	IG SW ON– Throttle valve fully closed (Throttle opener must be cancelled first)	*1TVIS – E1	2.0 V or less
	IG SW ON – Throttle valve open ”	*1TVIS – E1	9 – 14 V
	Idling	*2TVIS – E1	2.0 V or less
	4,200 rpm or more	*2TVIS – E1	9 – 14 V
	IG SW ON – DLC1 TE1 – E1 not connected	TE1 – E1	9 – 14 V
	IG SW ON – DLC1 TE1 – E1 connected	TE1 – E1	0.5 V or less

Remarks: ’*1 w/ Regular Gasoline *2 ’w/ Premium Gasoline

PCME	Condition	Terminals	Resistance
	Throttle valve open	IDL – E2	Infinity
	Throttle valve fully closed	IDL – E2	2,300 Ω or less
	(Throttle opener must be cancelled first)		
	Throttle valve fully open	VTA – E2	2,000 – 10,200 Ω
	Throttle valve fully closed	VTA – E2	200 – 5,700 Ω
	(Throttle opener must be cancelled first)		
	–	VC – E2	2,500 – 5,900 Ω
	Measuring plate fully closed	VS – E2	200 – 600 Ω
	Measuring plate fully open	VS – E2	20 – 1,200 Ω
	Intake air temp. 20* C (68˚ F)	THA – E2	2,000 – 3,000 Ω
	Coolant temp. 80˚C (176˚F)	THW – E2	200 – 400 Ω
	Cold (–10˚C (14˚F) to 50˚C (104˚F))		
		G1 or G2–G–	125 – 200 Ω
	Hot (50˚C (104˚F) to 100˚C (212˚F))		
		G1 or G2–G–	160 – 235 Ω
	Cold (–10˚ C (14˚ F) to 50˚C (104˚ F))	N E – G –	155 – 250 Ω
	Hot (50˚C (104˚F) to 100˚C (212˚F))	N E – G–	190 – 290 Ω
		+1B or+B1–RSCor RSO	17.7 – 23.9 Ω
Fuel cut rpm	Fuel return rpm		1,600 rpm

SQOEE–02

TORQUE SPECIFICATIONS

Part tightened	N·m	kgf·cm	ft·lbf
Fuel line (Union bolt type)	29	300	22
Fuel line (Flare nut type)	30	310	22
Drain plug x Fuel tank	13	130	9
Fuel pump x Fuel tank	3.4	35	30 in.·lbf
Fuel sender gauge x Fuel tank	1.5	15	13 in.·lbf
Fuel evaporation vent tube x Fuel tank	1.5	15	13 in.·lbf
Fuel tank filler pipe x Fuel tank	3.4	35	30 in.·lbf
Fuel tank band x Body	29	300	22
No.2 center floor crossmember x Body	29	300	22
Cold start injector x Intake manifold	5.9	60	52 in.·lbf
Cold start injector pipe x Cold start injector	12	125	9
Fuel pressure regulator x Delivery pipe	29	300	22
Injector cover x Delivery pipe	7.8	80	69 in.·lbf
Delivery pipe x Cylinder head	19	195	14
Fuel inlet pipe x Delivery pipe	29	300	22
EGR valve x Intake manifold	19	195	14
EGR pipe x Cylinder head	25	260	19
Throttle body x Intake manifold	19	195	14
Intake air connector stay x Throttle body	19	195	14
Intake air connector stay x Cylinder head	7.8	80	69 in.·lbf
Intake air connector x Intake air connector	19	195	14
No.1 intake manifold stay x Intake manifold	25	260	19
No.1 intake manifold stay x Cylinder block	25	260	19

SOLENOID RESISTOR

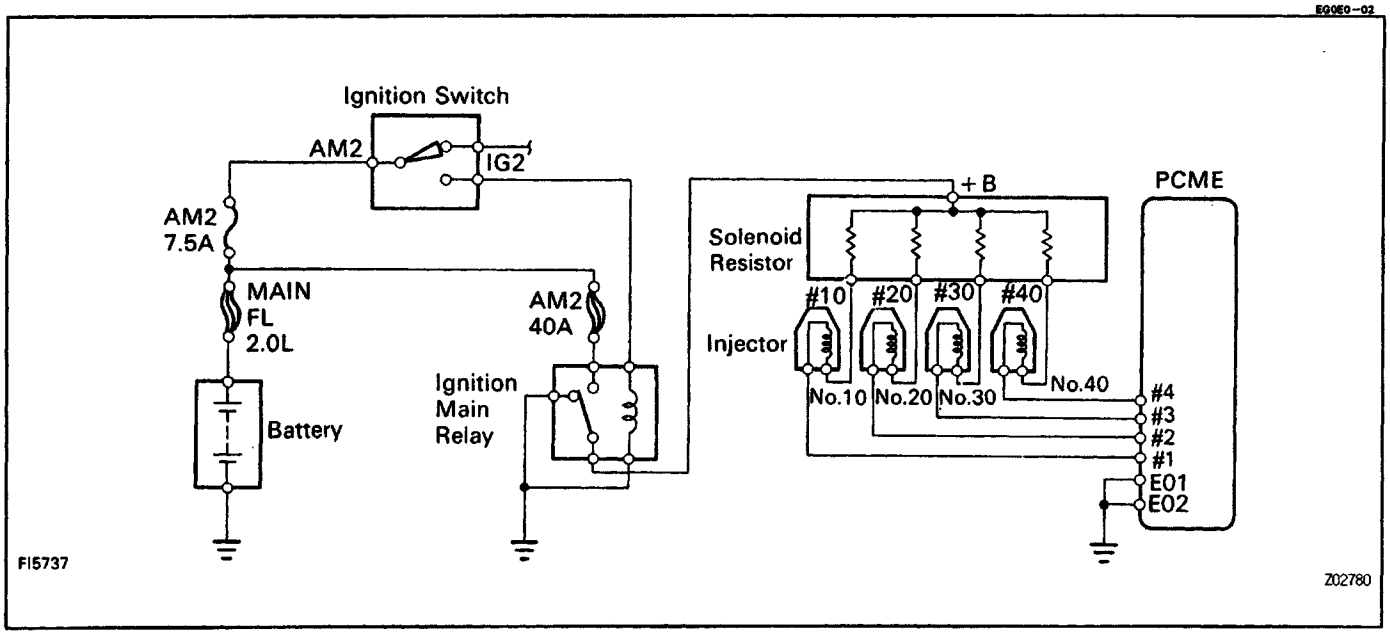

COMPONENTS FOR REMOVAL AND INSTALLATION

EG0DR–04

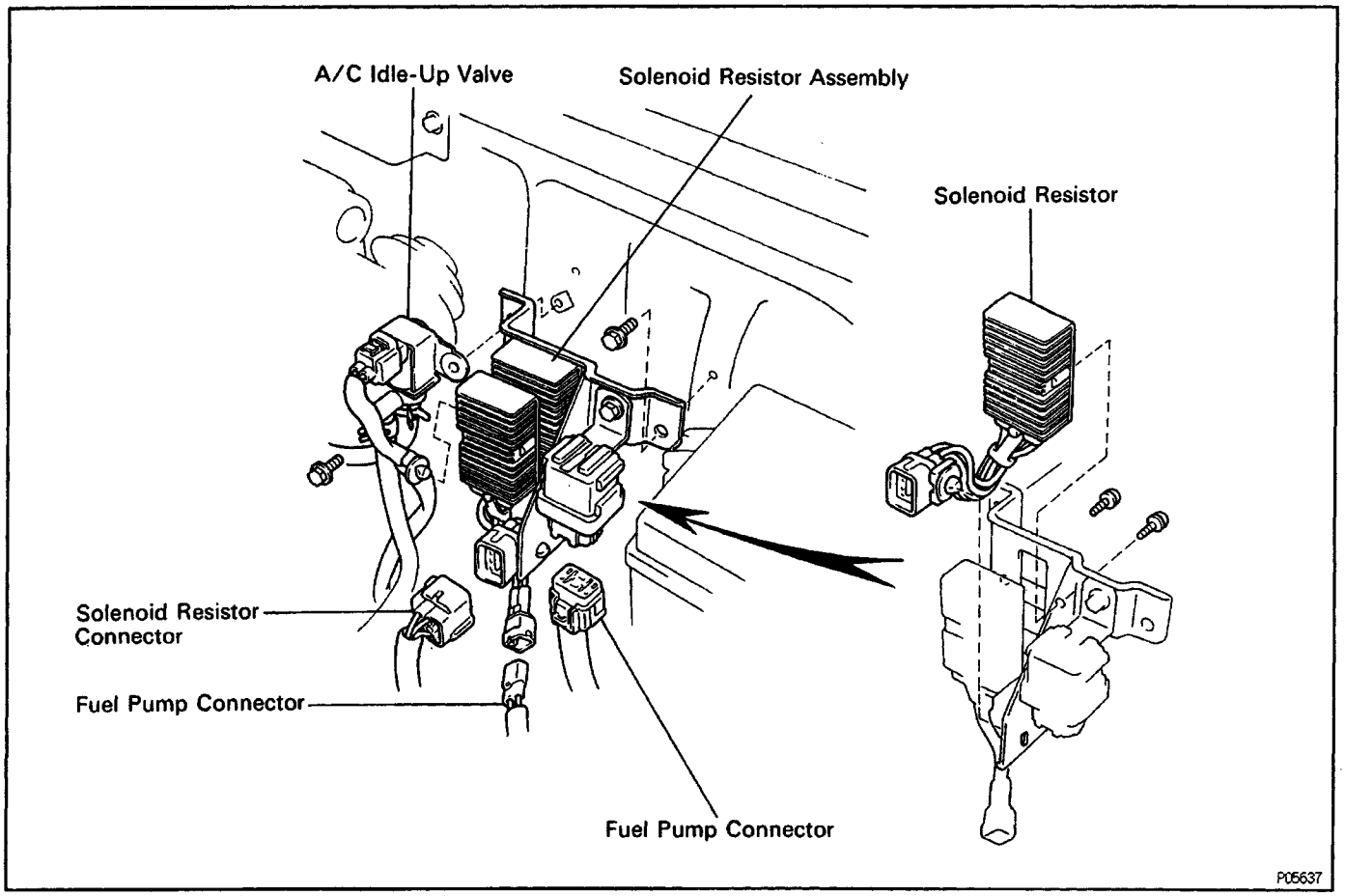

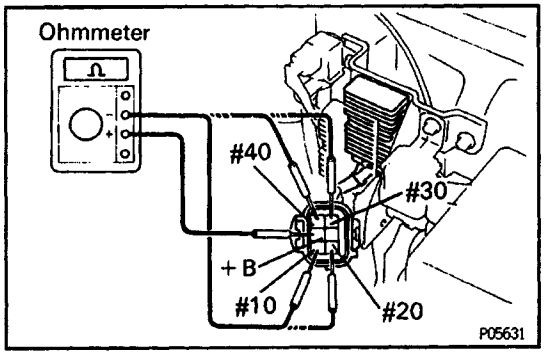

SOLENOID RESISTOR INSPECTION EG0YV–01

1. DISCONNECT SOLENOID RESISTOR CONNECTOR

2. INSPECT SOLENOID RESISTOR

Using an ohmmeter, measure the resistance between each terminal.

Resistance (Cold):

4–6Ω

If the resistance is not as specified, replace the re–sistor.

3. RECONNECT SOLENOID RESISTOR CONNECTOR

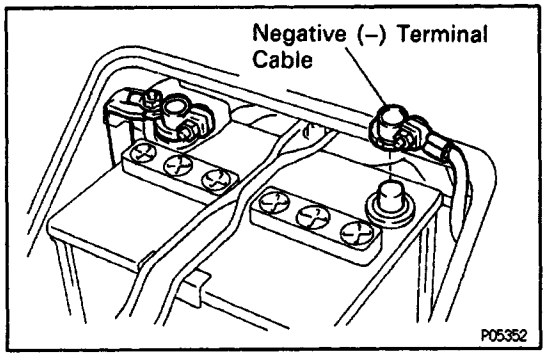

SOLENOID RESISTOR REPLACEMENT EG0YW–01

(See Components for Removal and Installation)

1. DISCONNECT CABLE FROM NEGATIVE TERMINAL OF BATTERY

CAUTION: Turn the ignition switch to 'LOCK'. Discon–nect the negative terminal from the battery. Wait at least 20 seconds before proceeding with work.

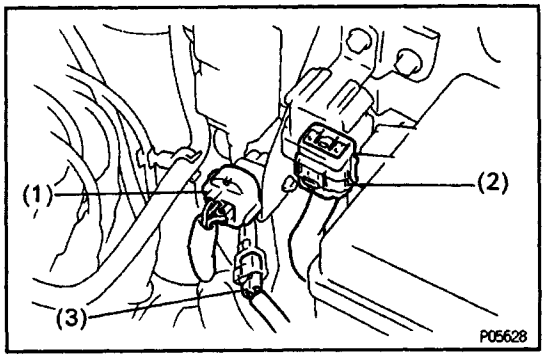

2. DISCONNECT CONNECTORS

Disconnect the following connector:

(1) Solenoid resistor connector
(2) Fuel pump relay connector
(3) Fuel pump resistor connector

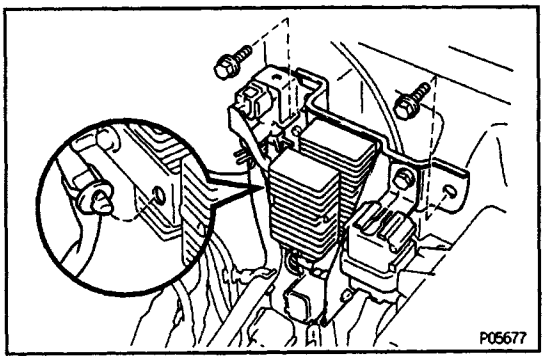

3. REMOVE SOLENOID RESISTOR ASSEMBLY

(a) Remove the mounting bolt.
(b) Disconnect the wire clamp from the bracket, and remove the solenoid resistor assembly.

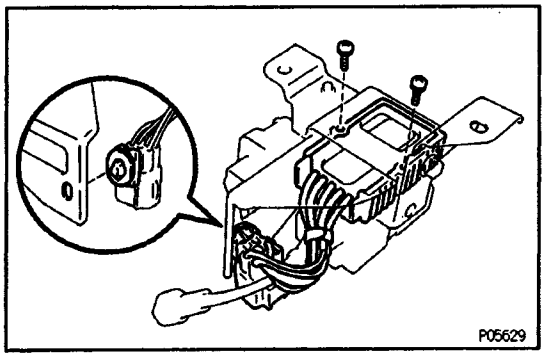

4. REMOVE SOLENOID RESISTOR FROM BRACKET

(a) Disconnect the wire clamp from the bracket.

(b) Remove the two screws and solenoid resistor.

5. REINSTALL SOLENOID RESISTOR TO BRACKET

6. REINSTALL SOLENOID RESISTOR ASSEMBLY

7. RECONNECT CONNECTORS

8. RECONNECT CABLE TO NEGATIVE TERMINAL OF BATTERY

THROTTLE BODY

EG0YL–01

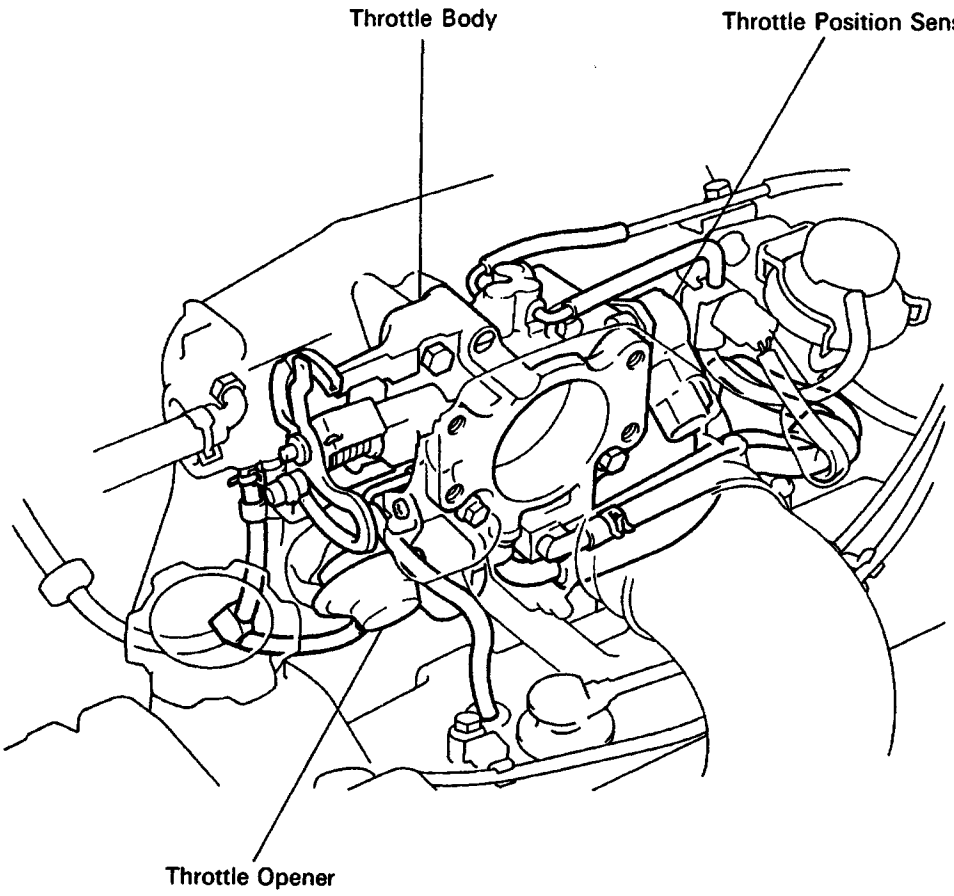

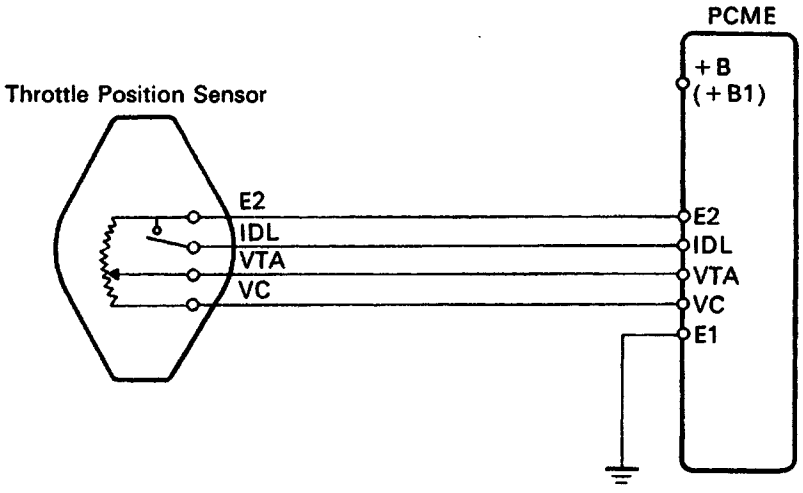

P04293
FI1366

Z02788

EG0YM–01

ON–VEHICLE INSPECTION

1. INSPECT THROTTLE BODY

(a) Check that the throttle linkage moves smoothly.

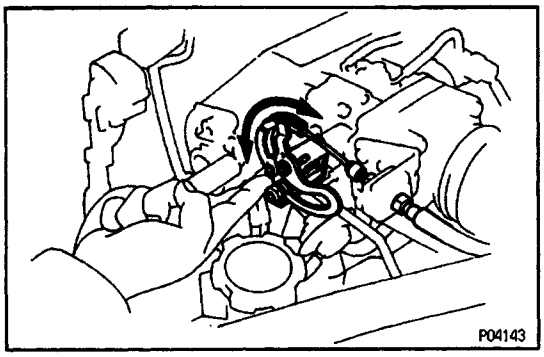

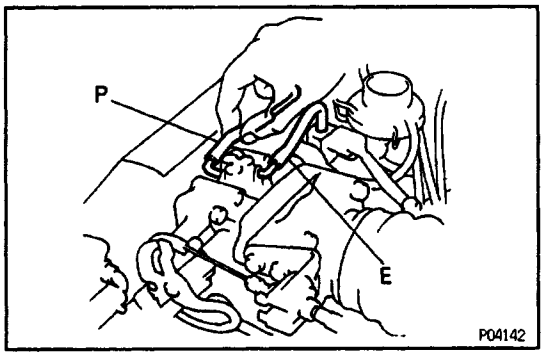

(b) Check the vacuum at each port.

- Start the engine.
- Check the vacuum with your finger.

Port name	At idle	Other than idle
P	No vacuum	Vacuum
E	No vacuum	Vacuum

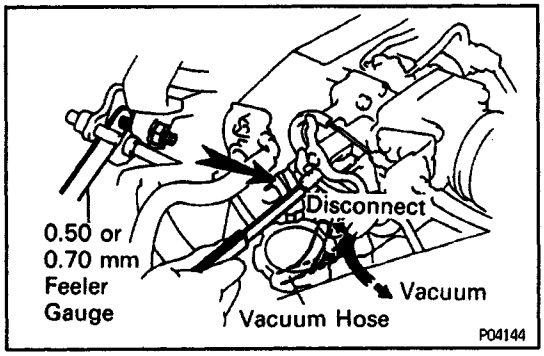

2. INSPECT THROTTLE POSITION SENSOR

(a) Disconnect the sensor connector.
(b) Disconnect the vacuum hose from the throttle opener.
(c) Apply vacuum to the throttle opener.
(d) Insert a feeler gauge between the throttle stop screw and stop lever.

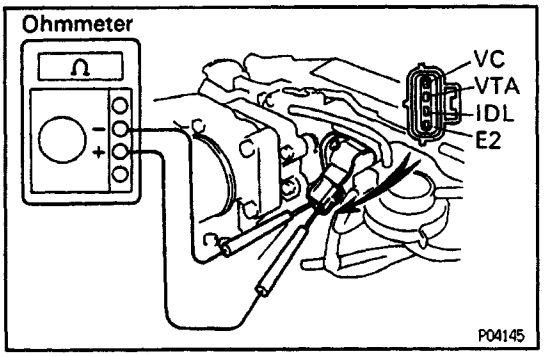

(e) Using an ohmmeter, measure the resistance between each terminal.

Clearance between lever and stop screw	Between terminals	Resistance
0 mm (0 in.)	VTA – E2	0.2 – 5.7 kΩ
0.50 mm (0.020 in.)	IDL – E2	2.3 kΩ or less
0.70 mm (0.028 in.)	IDL – E2	Infinity
Throttle valve fully open	VTA – E2	2.0 – 10.2 kΩ
–	VC – E2	2.5 – 5.9 kΩ

(f) Reconnect the vacuum hose to the throttle opener.
(g) Reconnect the sensor connector.

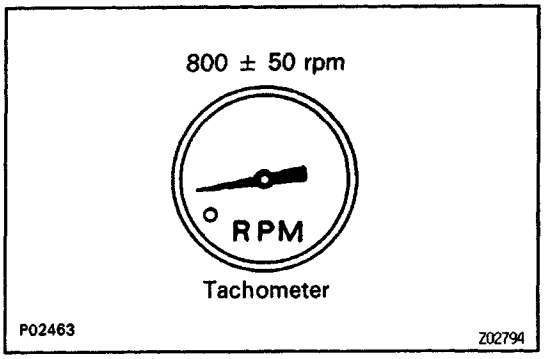

3. INSPECT THROTTLE OPENER

A. Warm up engine

Allow the engine to warm up to normal operating temperature.

B. Check idle speed

Idle speed:

800 ± 50 rpm

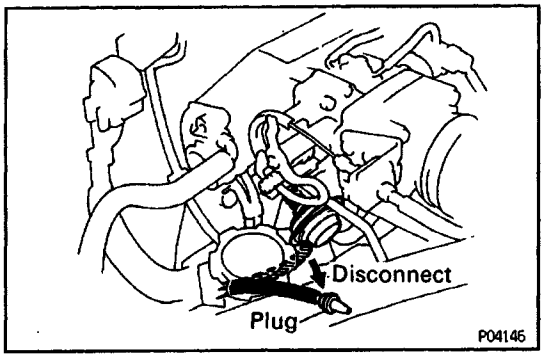

C. Check and adjust throttle opener setting speed

(a) Disconnect the vacuum hose from the throttle opener, and plug the hose end.

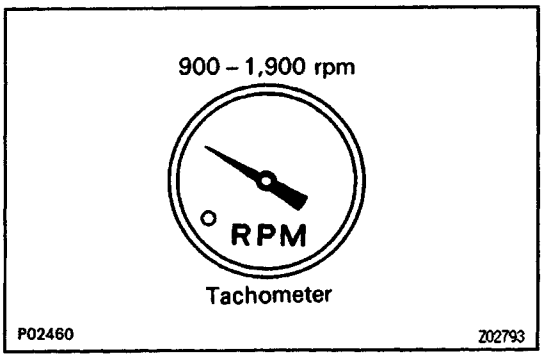

(b) Check the throttle opener setting speed.

Throttle opener setting speed:

900 – 1.900 rpm (w/ Cooling fan OFF)

If the throttle opener setting is not as specified, replace the throttle body assembly.

(c) Stop the engine.

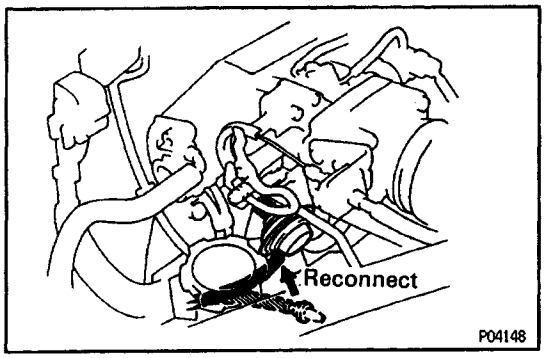

(d) Reconnect the vacuum hose to the throttle opener.

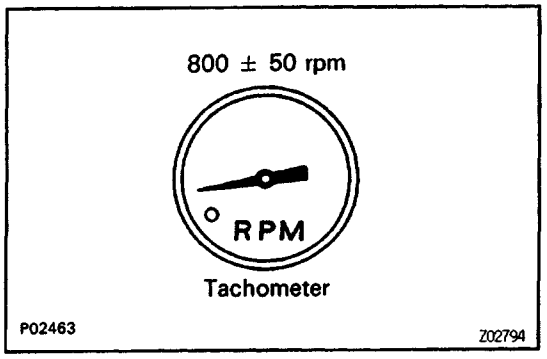

(e) Start the engine, and check that the idle rpm returns to the correct speed.

Idle speed:

800 ± 50 rpm

EGOYN–01

COMPONENTS FOR REMOVAL AND INSTALLATION

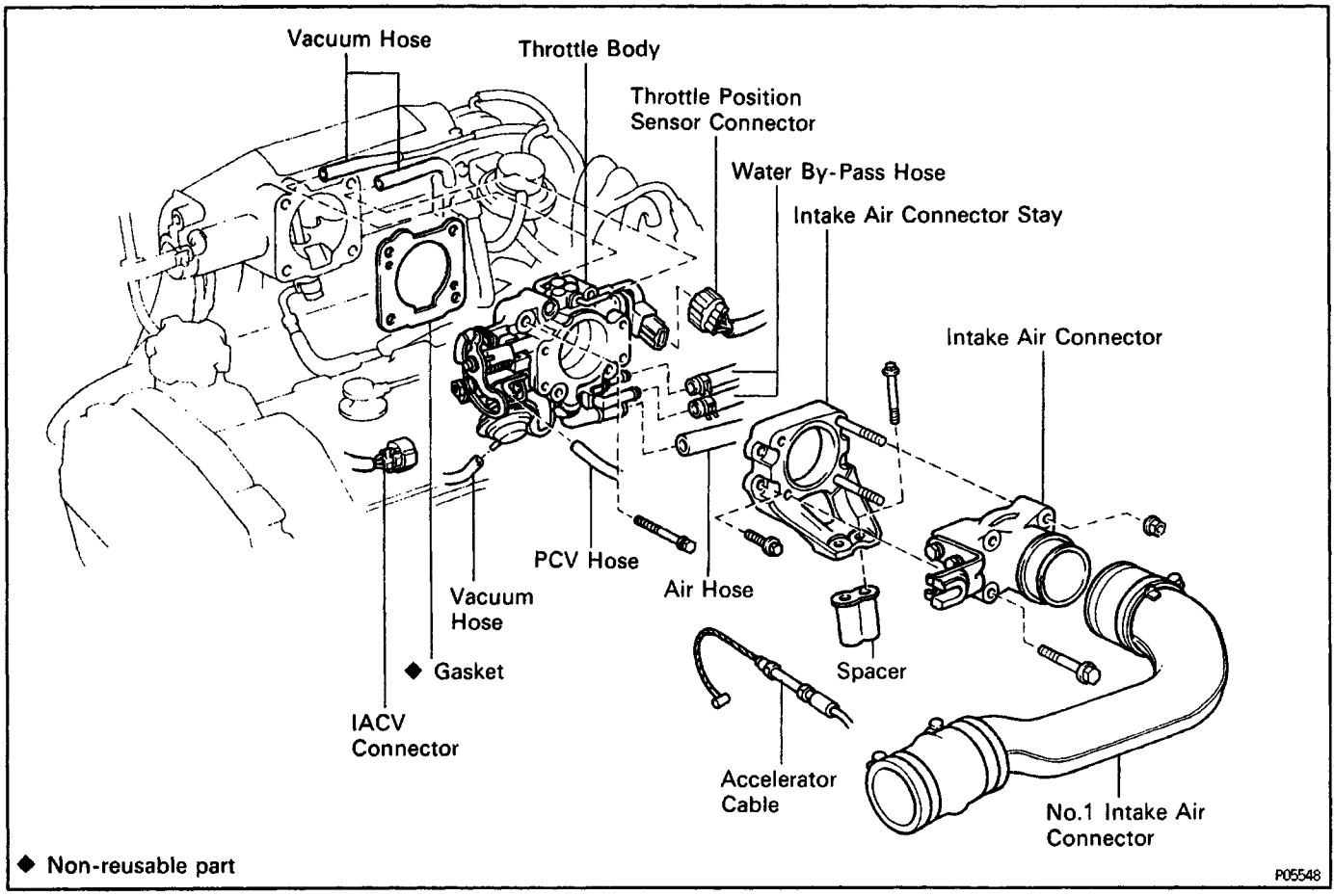

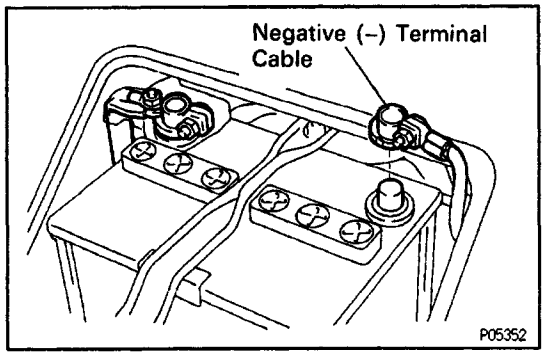

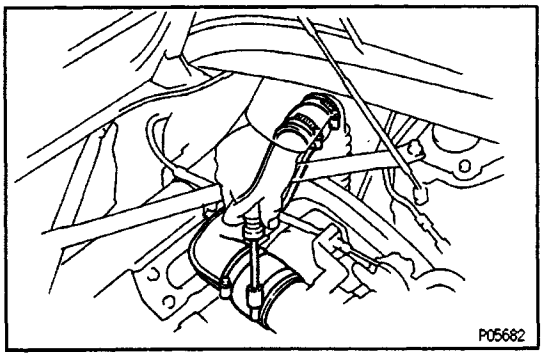

EG0DG–02

THROTTLE BODY REMOVAL

(See Components for Removal Installation)

1. DISCONNECT CABLE FROM NEGATIVE TERMINAL OF BATTERY

CAUTION: Turn the ignition switch to 'LOCK'. Disconnect the negative terminal from the battery. Wait at least 20 seconds before proceeding with work.

2. DRAIN ENGINE COOLANT

3. DISCONNECT ACCELERATOR CABLE FROM THROTTLE BODY

4. REMOVE NO.1 INTAKE AIR CONNECTOR

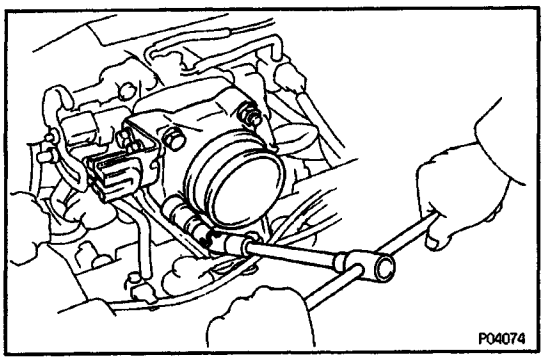

5. REMOVE INTAKE AIR CONNECTOR

Remove the two bolts, two nuts and intake air con–nector.

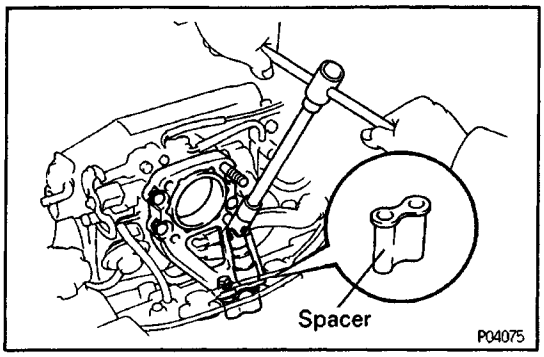

6. REMOVE INTAKE AIR CONNECTOR STAY

(a) Remove the six bolts and intake air connector stay.
(b) Remove the spacer.

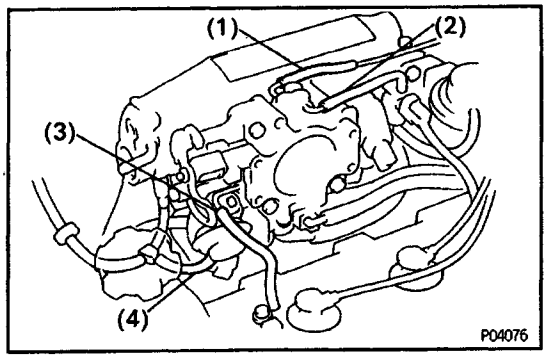

7. REMOVE THROTTLE BODY

(a) Disconnect the following connector:
- Throttle position sensor connector
- IACV connector

(b) Disconnect the following hoses:
(1) Vacuum hose from port ”P” of throttle body
(2) Vacuum hose from port ”E” of throttle body
(3) PCV hose from port PCV of throttle body
(4) Vacuum hose from throttle opener.

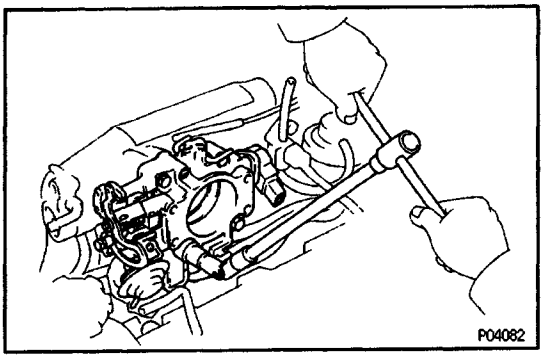

(c) Remove the four bolts, and disconnect the throttle body from the intake manifold.
(d) Remove the throttle body gasket.

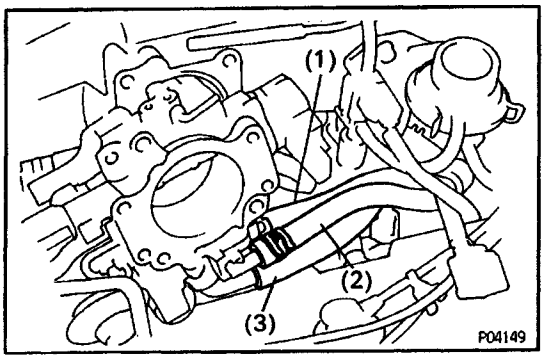

(e) Disconnect the following hoses from the throttle body, and remove the throttle body:
(1) Water by–pass hose (from upper side of No. 1 air tube)
(2) Water by–pass hose (from lower side of No. 1 air tube)
(3) Air hose (from No. 1 air tube)

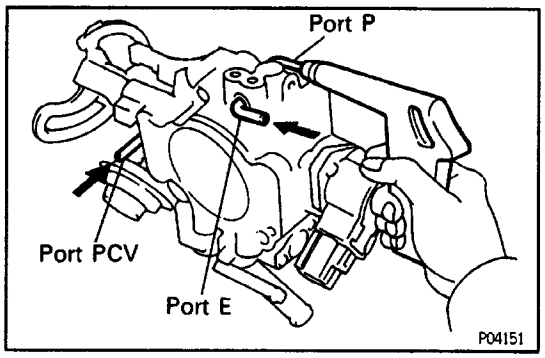

THROTTLE BODY INSPECTION

EG0DH–02

1. CLEAN THROTTLE BODY

(a) Using a soft brush and carburetor cleaner, clean the cast parts.

(b) Using compressed air, clean all the passages and apertures.

NOTICE: To prevent deterioration, do not clean the throttle position sensor.

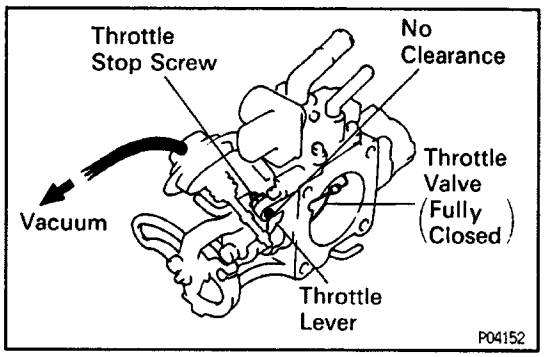

2. INSPECT THROTTLE VALVE

(a) Apply vacuum to the throttle opener.

(b) Check that there is no clearance between the throttle stop screw and throttle lever when the throttle valve is fully closed.

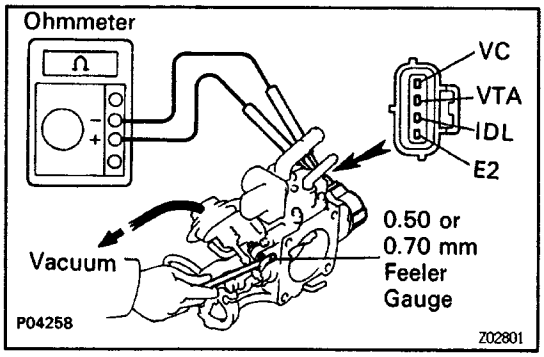

3. INSPECT THROTTLE POSITION SENSOR

(a) Apply vacuum to the throttle opener.

(b) Insert a feeler gauge between the throttle stop screw and stop lever.

(c) Using an ohmmeter, measure the resistance between each terminal.

Clearance between lever and stop screw	Between terminals	Resistance
0 mm (0 in.)	VTA – E2	0.2 – 5.7 kΩ
0.50 mm (0.020 in.)	IDL – E2	2.3 kΩ or less
0.70 mm (0.028 in.)	IDL – E2	Infinity
Throttle valve fully open	VTA – E2	2.0 – 10.2 kΩ
–	VC – E2	2.5 – 5.9 kΩ

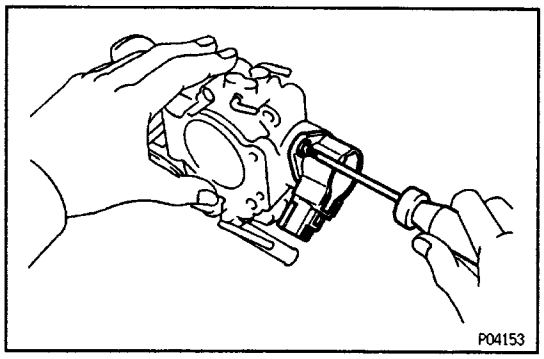

4. IF NECESSARY, ADJUST THROTTLE POSITION SENSOR

(a) Loosen the two set screws of the sensor.

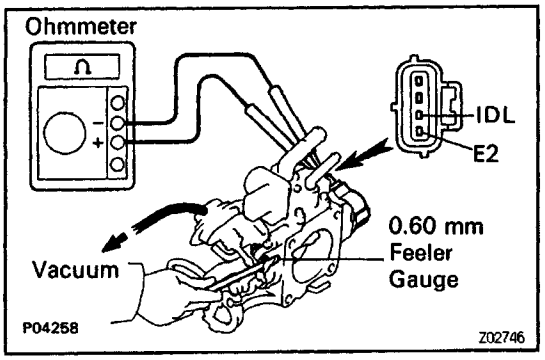

(b) Apply vacuum to the throttle opener.
(c) Insert a 0.60 mm (0.024 in.) feeler gauge between the throttle stop screw and stop lever.
(d) Connect the test probe of an ohmmeter to the terminals IDL and E2 of the sensor.

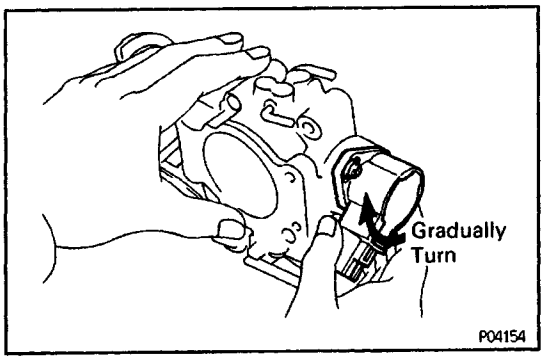

(e) Gradually turn the sensor clockwise until the ohmmeter deflects, and secure it with the two set screws.

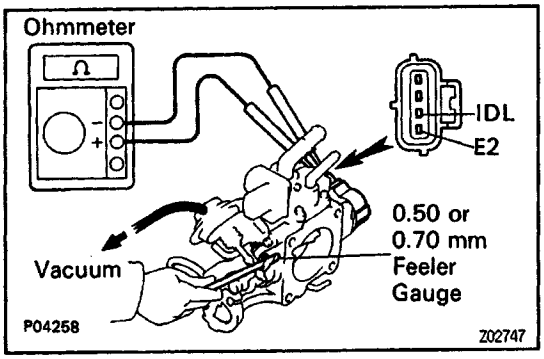

(f) Recheck the continuity between terminals IDL and E2.

Clearance between lever and stop screw	Continuity (IDL – E2)
0.50 mm (0.020 in.)	Continuity
0.70 mm (0.028 in.)	No continuity

EGOYP–01

THROTTLE BODY INSTALLATION
(See Components for Removal and Installation)
1. INSTALL THROTTLE BODY

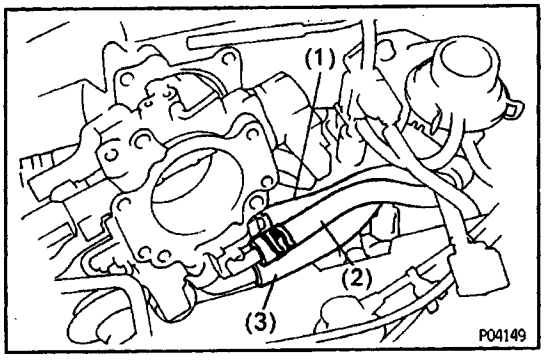

(a) Connect the following hoses to the throttle body:
(1) Water by–pass hose (from upper side of No. 1 air tube)
(2) Water by–pass hose (from lower side of No. 1 air tube)
(3) Air hose (from No. 1 air tube)

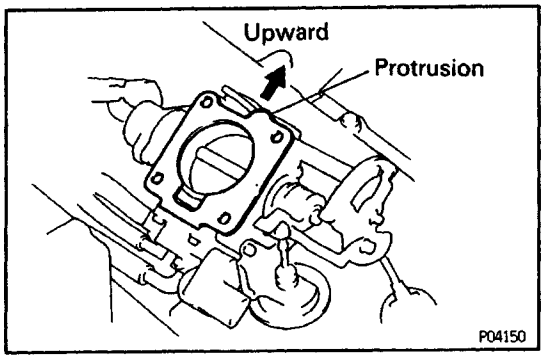

(b) Install a new gasket on the throttle body, facing the protrusion upward.

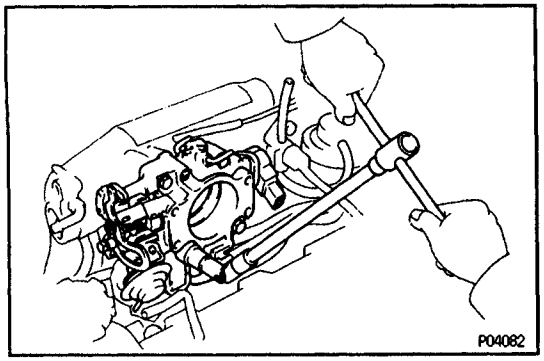

(c) Install the throttle body with the four bolts.

Torque: 19 N–m (195 kgf–cm, 14 ft–lbf)

Different bolt lengths are used for the upper and lower sides.

Bolt length:

45 mm (1.77 in.) for upper side

70 mm (2.76 in.) for lower side

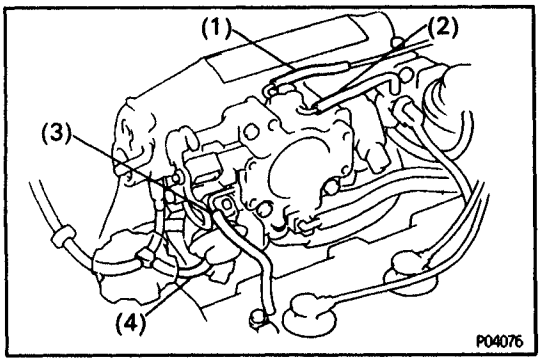

(d) Connect the following hoses:

(1) Vacuum hose to port ”P” of throttle body

(2) Vacuum hose to port ”E” of throttle body

(3) PCV hose to port PCV of throttle body

(4) Vacuum hose to throttle opener

(e) Connect the following connector:

- Throttle position sensor connector
- IACV connector

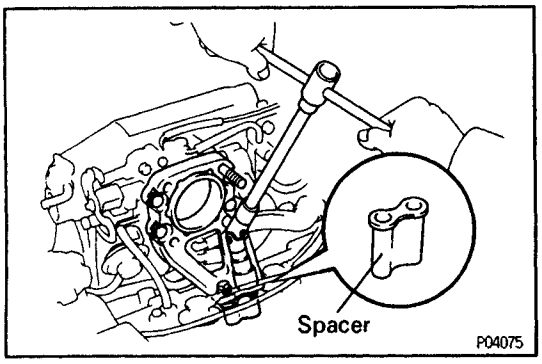

2. INSTALL INTAKE AIR CONNECTOR STAY

(a) Install the spacer.

(b) Install the intake air connector stay with the six bolts.

Torque:

7.8 N–m (80 kgf–cm, 69 in.–lbf) for 10 mm head

19 N–m (195 kgf–cm, 14 ft–lbf) for 12 mm head

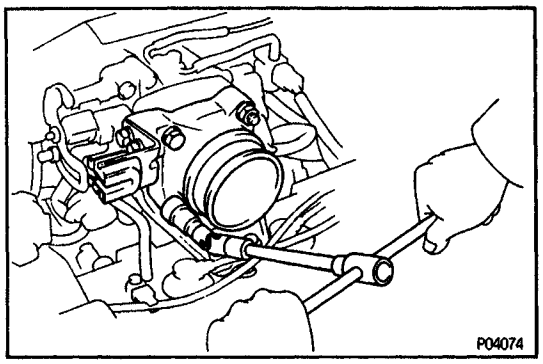

3. INSTALL INTAKE AIR CONNECTOR

Install the intake air connector with the two bolts and two nuts.

Torque: 19 N–m (195 kgf–cm, 14 ft–lbf)

4. CONNECT ACCELERATOR CABLE TO THROTTLE BODY

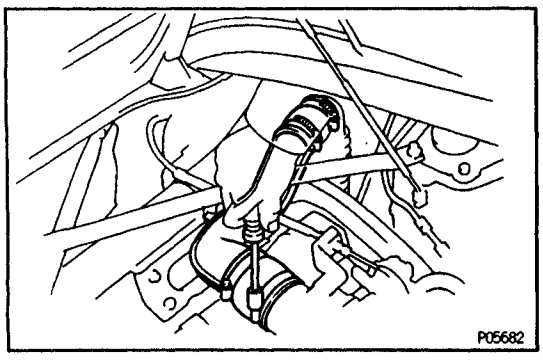

5. INSTALL NO.1 INTAKE AIR CONNECTOR

6. CONNECT CABLE TO NEGATIVE TERMINAL OF BATTERY

7. REFILL WITH ENGINE COOLANT

8. START ENGINE AND CHECK FOR ENGINE COOLANT

TROUBLESHOOTING WITH VOLT OHMMETER

HINT: EG0XT–01

- The following troubleshooting procedures are designed for inspection of each separate system, and therefore the actual procedure may vary somewhat. However, troubleshooting should be performed while referring to the inspection methods described in this manual.
- Before beginning inspection, it is best to first make a simple check of the fuses, H–fuses, fusible link and the condition of the connectors.
- The following troubleshooting procedures are based on the supposition that the trouble lies in either a short or open circuit within the computer.
- If engine trouble occurs even though proper operating voltage is detected in the computer connector, then it can be assumed that the PCME is faulty and should be replaced.

FUSES, H– FUSES AND FUSIBLE LINK LOCATION

EG0XU–01

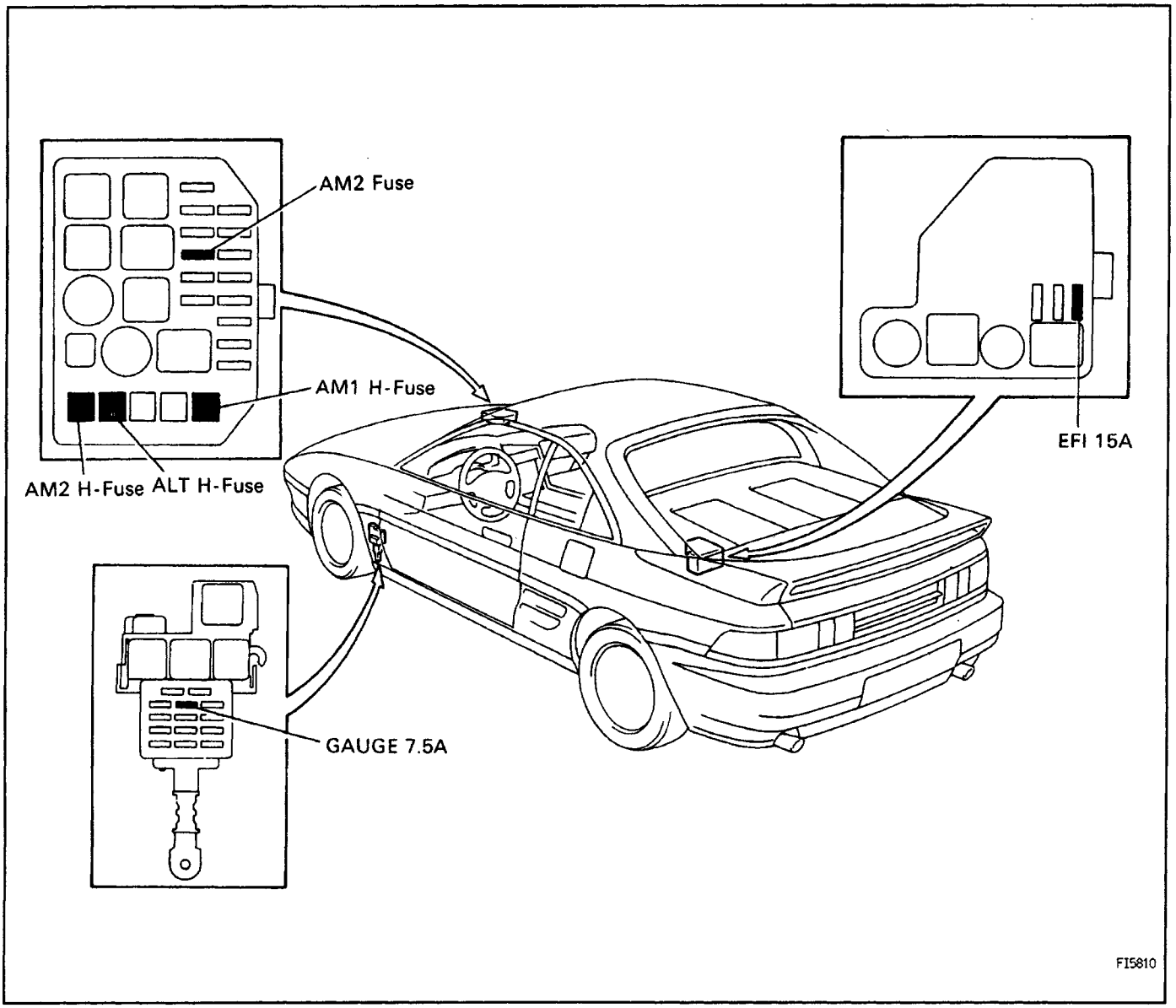

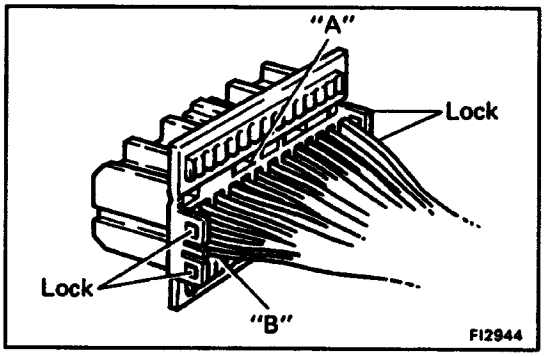

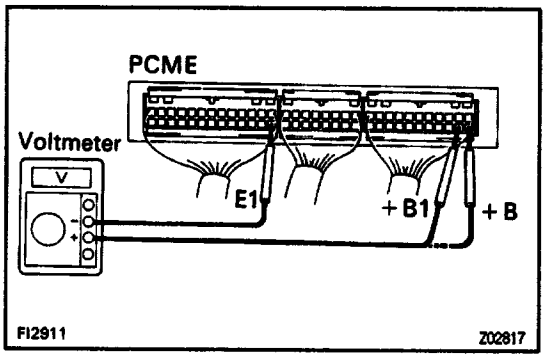

SMPI SYSTEM CHECK PROCEDURE B90XV–01

PREPARATION

(a) Disconnect the connectors from the PCME.

(b) Remove the locks as shown in the illustration so that the tester probe(s) can easily come in.

NOTICE: Pay attention to sections 'A' and 'B' in the Illustration which can be easily broken.

(c) Reconnect the connectors to the PCME.

HINT:

- Perform all voltage measurements with the connectors connected.
- Verify that the battery voltage is 11 V or more when the ignition switch is in the "ON" position.

Using a voltmeter with high impedance (10 kΩ/V minimum), measure the voltage at each terminal of the wiring connectors.

PCME Wiring Connectors Voltage

No.	Terminals	Condition		STD voltage (V)	See page
1	+B, +B1 – E1	IGS WON		9–14	EG1–296
2	BATT – E1	–		9–14	EG1–297
3	IDL – E2	IG SW ON	Throttle valve open	9–14	EG1–298
	VC – E2		–	4.5–5.5	
	VTA – E2		Throttle valve fully closed (Throttle opener must be cancelled first)	0.3–0.8	
			Throttle valve fully open	3.2–4.9	
4	VC – E2		–	4.5–5.5	EG1–300
	VS – E2		Measuring plate fully closed	4.0–5.5	
			Measuring plate fully open	0.2–0.5	
		Idling		1.6–4.1	
		3,000 rpm		1.0–2.0	
5	#1, #2, #3, #4 – E01, E02	IG SW ON		9–14	EG1–301
6	THA – E2	IG SW ON	Intake air temp. 20°C (68°F)	0.5–3.4	EG1–302
7	THW – E2		Coolant temp. 80°C (176°F)	0.2–1.0	EG1–303
8	STA – E1	Cranking		6 or more	EG1–304
9	IGT – E1	Idling		Pulse generation	EG1–305
10	RSC, RSO – E1	IG SW ON	PCME connectors disconnected	9–14	EG1–306
11	W – E1	No trouble ("CHECK" engine warning light off) and engine running		9–14	EG1 –307
12	PIM – E2	IG SW ON		2.5–4.5	EG1–308
	VC – E2			4.5–5.5	
13	AC – E1	IG SW ON	Air conditioning ON	9–14	EG1–309

PCM E Terminals

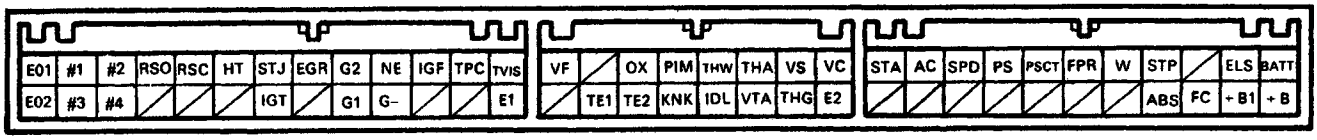

FI2796

V00894

No.	Terminals	Trouble	Condition	STD voltage
1	+B, +B1 – E1	No voltage	IG SW ON	9–14V

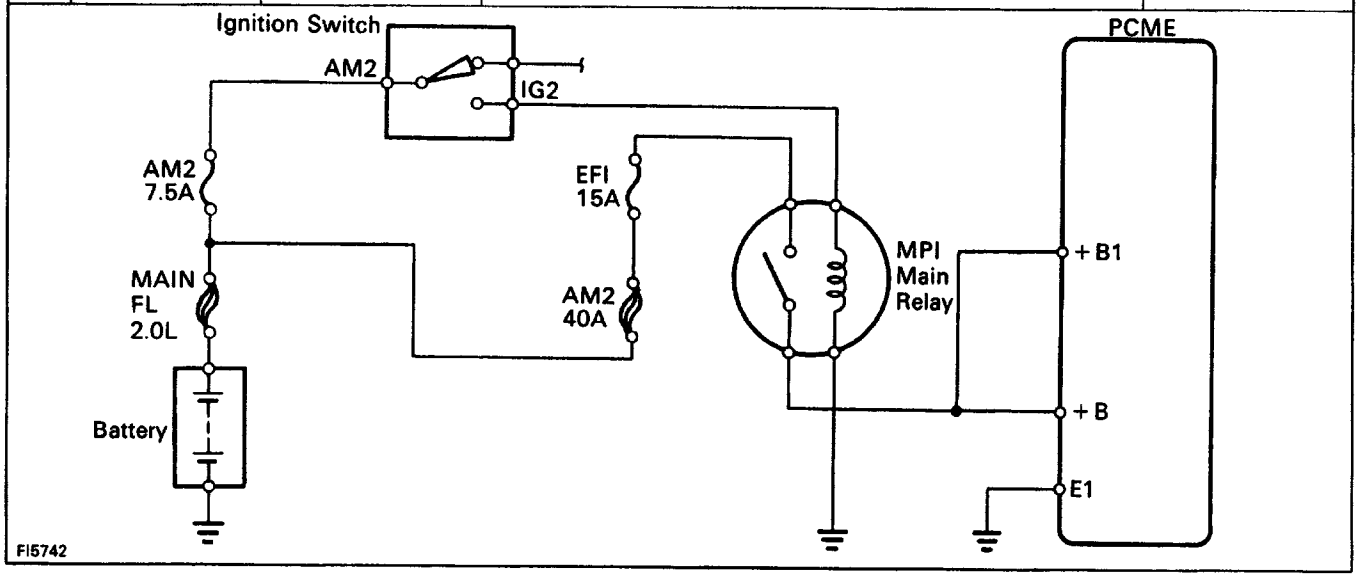

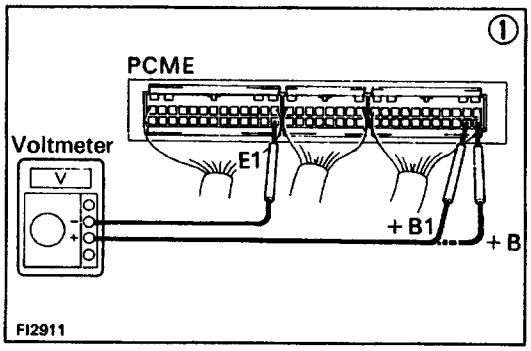

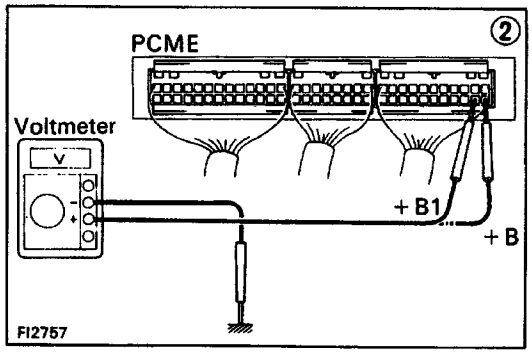

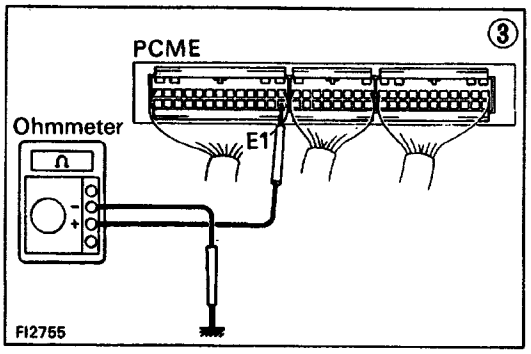

1 There is no voltage between PCME terminals + B or + B1 and E1. (IG SW ON)

↓

2 Check that there is voltage between PCME terminal + B or + B1 and body ground. (IG SW ON)

NO → OK

3 Check wiring between PCME terminal E1 and body ground.

OK → Try another PCM E.

BAD → Repair or replace.

Check fuses, N–fuse, fusible link and ignition switch. BAD → Repair or replace.

OK

Check M PI main relay. (See page EG1–374) BAD → Replace.

OK

Check wiring between MPI main relay and battery. BAD → Repair or replace.

V00895

No.	Terminals	Trouble	Condition	STD voltage
2	BATT – E1	No voltage	–	9–14V

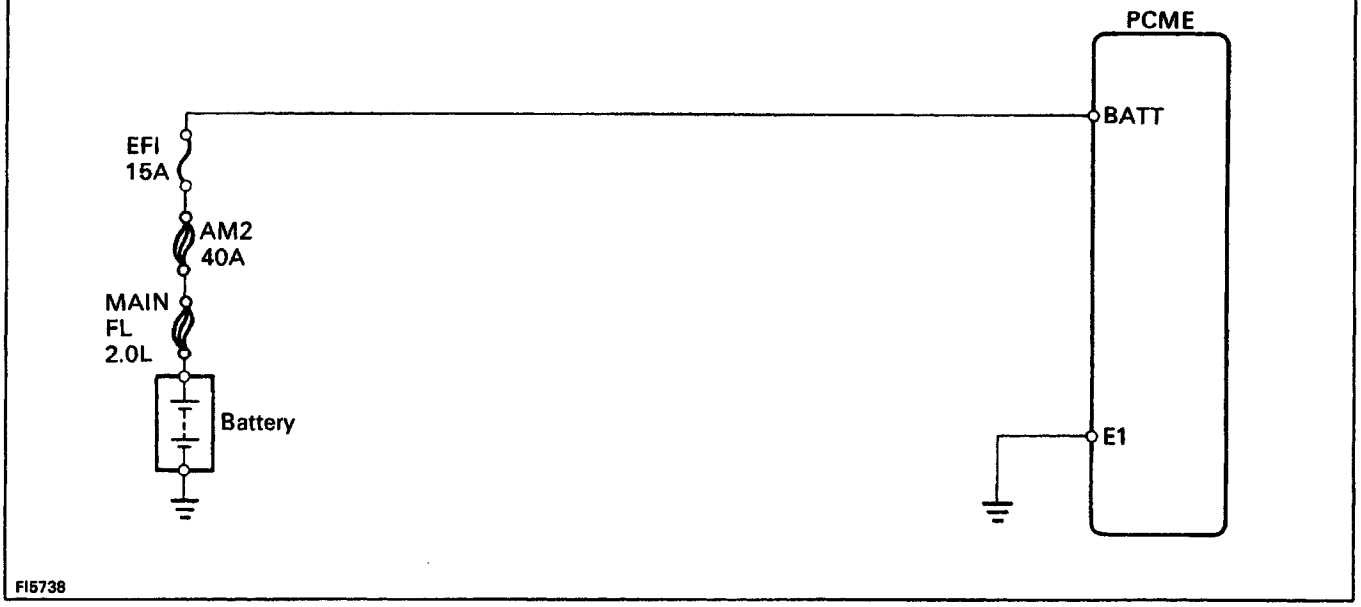

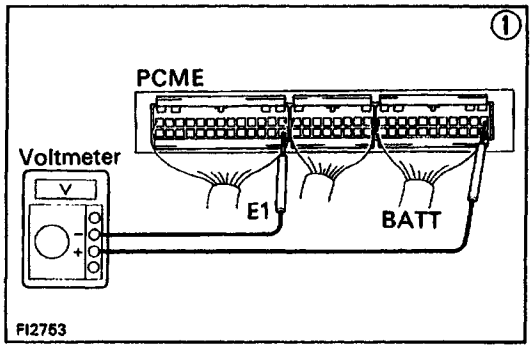

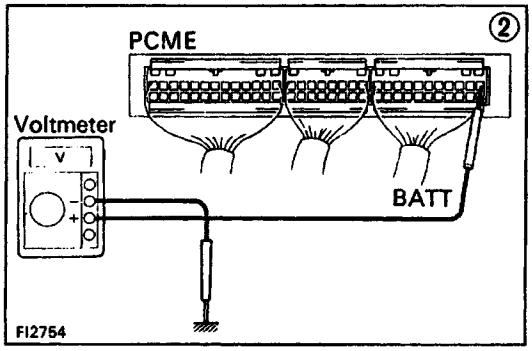

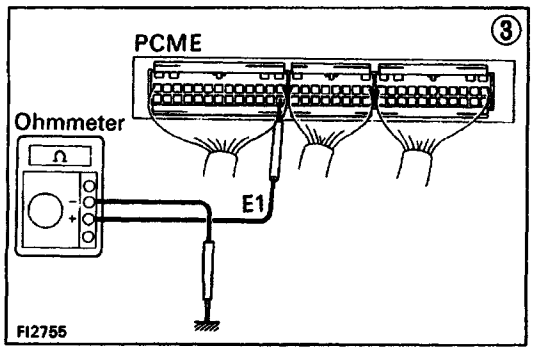

1 There is no voltage between PCME terminals BATT and E1.

2 Check that there is voltage between PCME terminal BATT and body ground.

NO → OK

3 Check wiring between PCME terminal E1 and body ground.

OK → Try another PCME.

BAD → Repair or replace.

Check fuse, H–fuse and fusible link.

BAD → Replace.

OK

Check wiring between PCME terminal and battery.

BAD → Repair or replace.

V00896

No.	Terminals	Trouble	Condition		STD voltage
3	IDL – E2	No voltage	IG SW ON	Throttle valve open	9 – 14 V
	VC – E2				4.5 – 5.5 V
	VTA – E2			Throttle valve fully closed Throttle opener must be cancelled first	0.3 – 0.8 V
				Throttle valve fully open	3.2 – 4.9 V

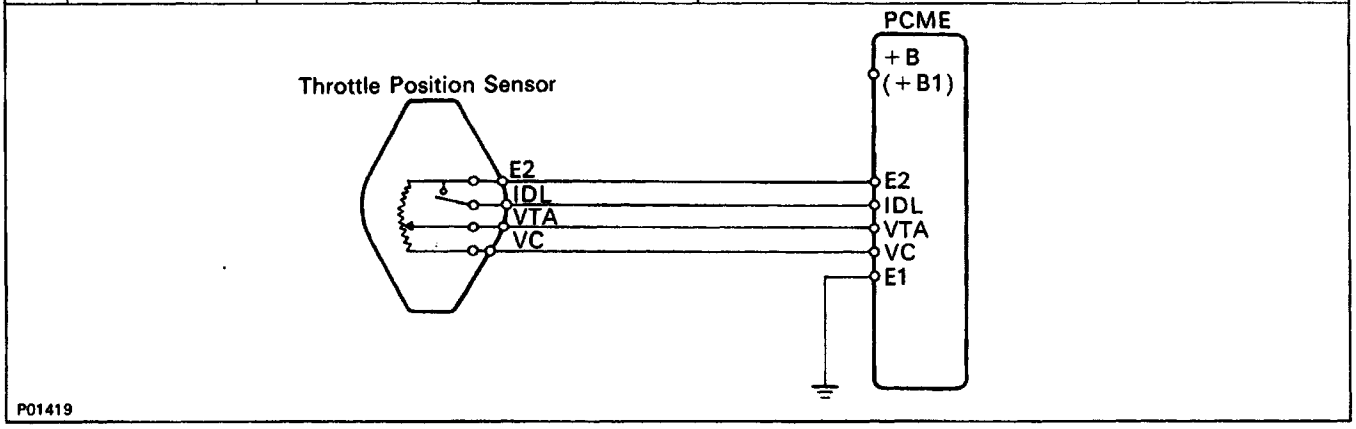

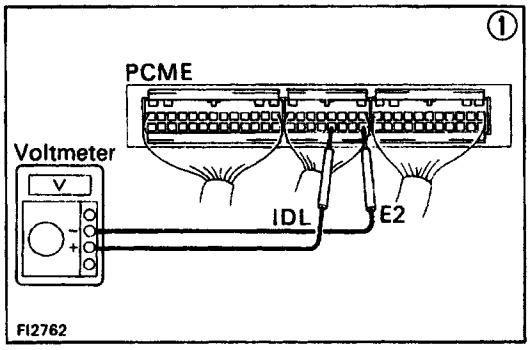

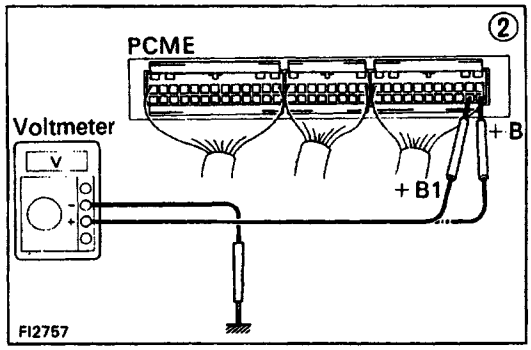

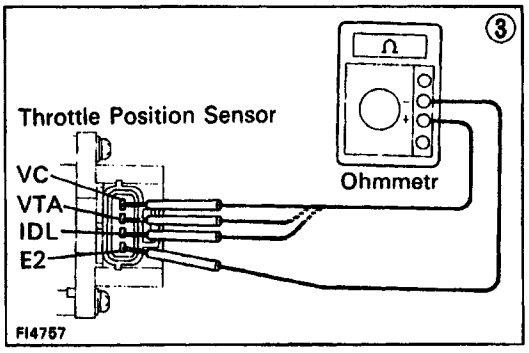

- **IDL – E2**

① There is no voltage between PCME terminals IDL and E2. (IG SW ON) (Throttle valve open)

② Check that there is voltage between PCME terminal + B (+ B1) and body ground. (IG SW ON)

NO

OK

Check wiring between PCME terminal E1 and body ground.

OK

Try another PCM E.

BAD

Repair or replace.

Refer to No. 1. (See page EG1–296)

BAD

Repair or replace.

OK

③ Check throttle position sensor. (See page EG1–362)

BAD

Repair or replace throttle position sensor.

OK

Check wiring between PCME and throttle position sensor.

BAD

OK

Try another PCME.

V00897

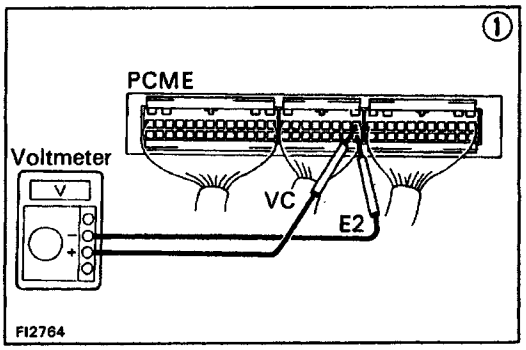

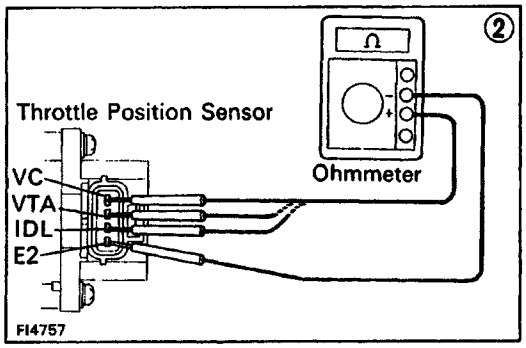

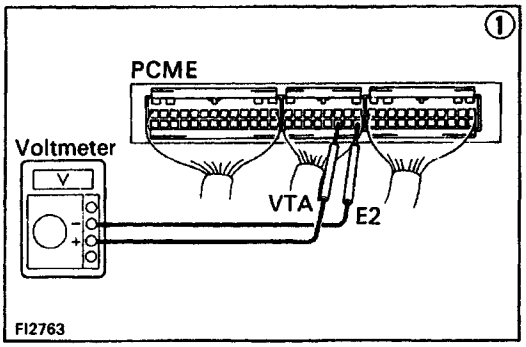

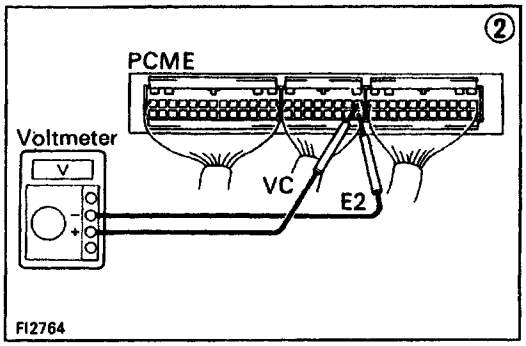

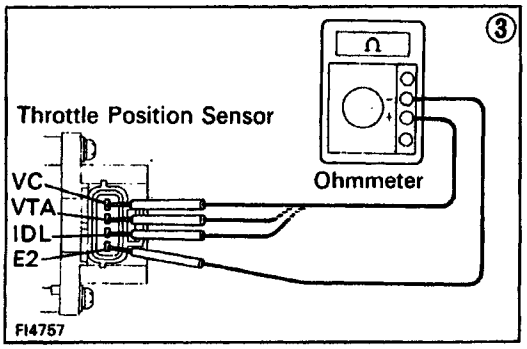

- **VC–E2**

① There is no voltage between PCME terminals VC and E2. (IG SW ON)

Check that there is voltage between PCME terminal + B (+ B1) and body ground. (IG SW ON)

OK → ② Check throttle position sensor. (See page EG1–362)

NO → Refer to No. 1. (See page EG1–296)

② BAD → Repair or replace.

② OK → Check wiring between PCM E and throttle position sensor.

OK → Try another PCM E.

BAD → Repair or replace wiring.

- **VTA – et**

① There is no specified voltage at PCME terminals VTA and E2. (IG SW ON)

② Check that there is voltage between PCME terminals VC and E2. (IG SW ON)

NO → Refer to VC – E2 trouble section.

OK → ③ Check throttle position sensor. (See page EG1–362)

③ BAD → Repair or replace.

③ OK → Check wiring between PCME and throttle position sensor.

BAD → Repair or replace.

OK → Try another PCME.

V00898

No.	Terminals	Trouble	Condition		STD voltage
4	VC – E2	No voltage	IG SW ON	–	4.5 – 5.5 V
	VS – E2			Measuring plate fully closed	4.0 – 5.5 V
				Measuring plate fully open	0.2 – 0.5 V
			Idle		1.6 – 4.1 V
			3,000 rpm		1.0 – 2.0 V

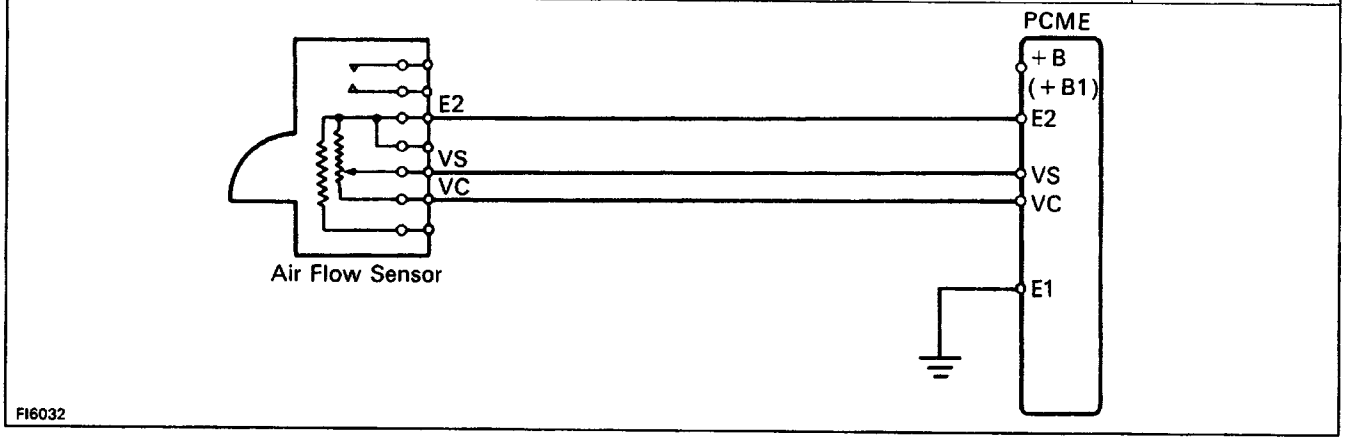

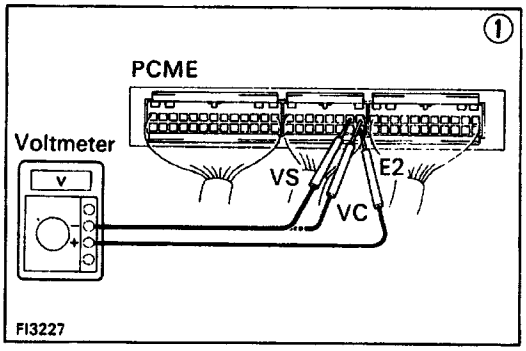

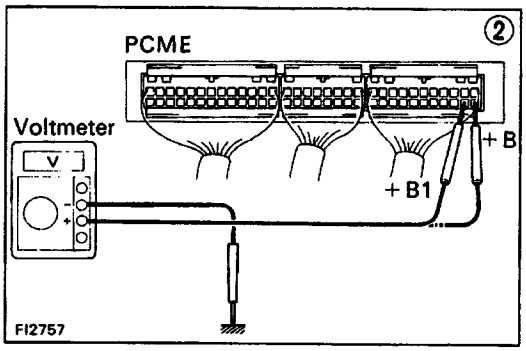

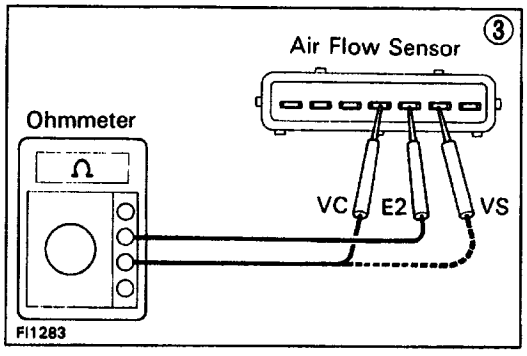

1 There is no specified voltage at PCM E terminals VC or VS and E2. (IG SW ON)

↓

2 Check that there is voltage between PCM E terminal + B (+ 131) and body ground. (IG SW ON)

OK → ↓

NO → Refer to No. 1. (See page EG1–296)

↓

Check wiring between PCME terminal E1 and body ground.

OK → ↓

BAD → Repair or replace.

↓

3 Check air flow sensor. (See page EG1–358)

BAD → Repair or replace air flow sensor.

OK → ↓

Check wiring between PCM E and air flow sensor.

OK → ↓

Try another PCM E.

BAD → Repair or replace.

V00899

No.	Terminals	Trouble	Condition	STD voltage
5	#1 #2 _ E01 #3 E02 #4	No voltage	IG SW ON	9 – 14 V

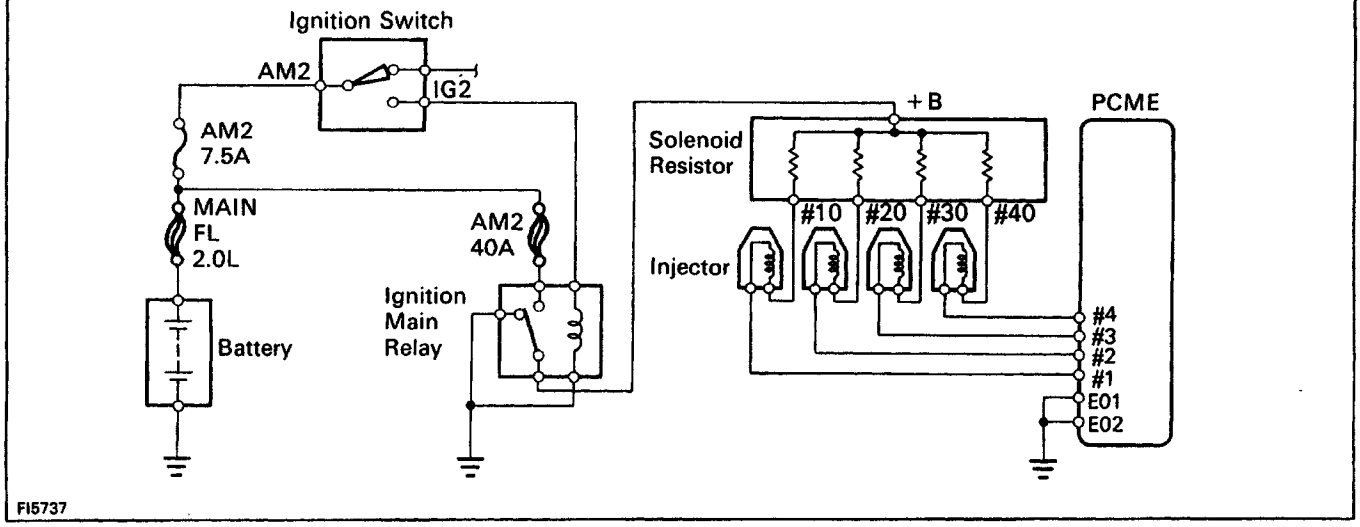

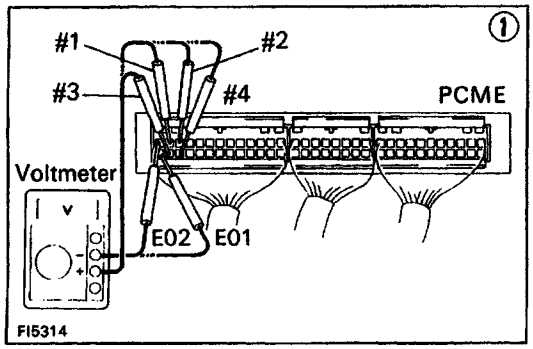

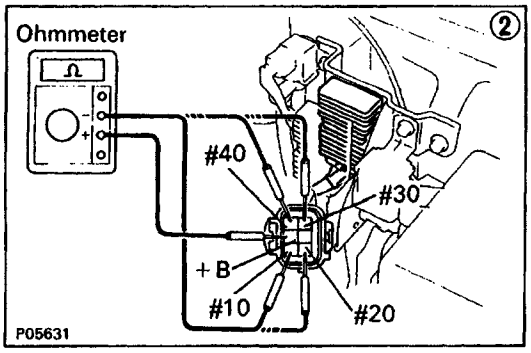

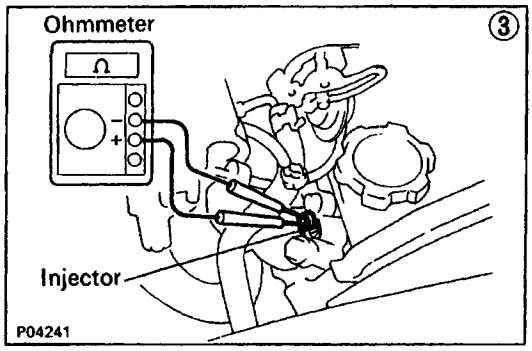

There is no voltage between PCME terminals #1, #2, #3 and/or #4 and E01 and/or E02. IG SW ON)

↓

Check that there is specified voltage between solenoid resistor terminal + B and body ground. STD voltage: 9 –14 V

OK ↓ NO

Check fuse, H–fuse, fusible link, wiring, ignition switch and ignition main relay. → BAD → Repair or replace.

↓

Check resistance between +B of solenoid resistor and each other terminal. STD resistance: 4 – 6Ω

OK ↓ NO

Check resistance of each injector. STD resistance: 2 – 4Ω → Replace resistor.

↓ OK

BAD → Replace injector.

↓

Check wiring between PCME and resistor → BAD → Repair or replace wiring.

↓ OK

Try another PCME.

V00900

No.	Terminals		Trouble	Condition	STD voltage
6	THA – E2	No voltage	IG SW ON	Intake air temperature 20˚C	0.5 – 3.4 V

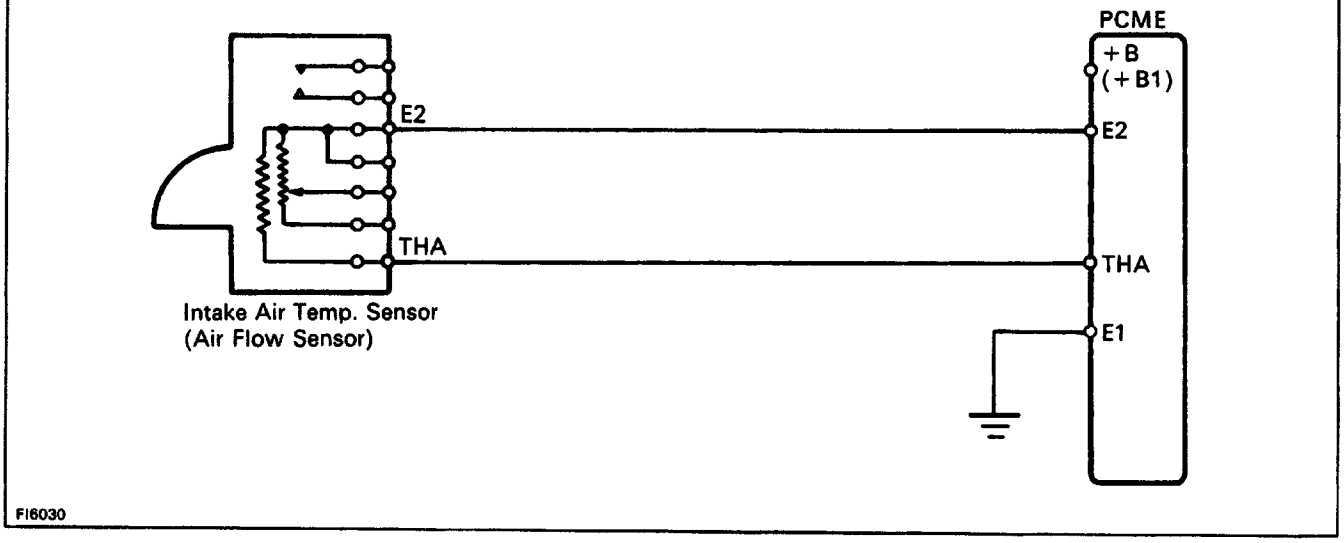

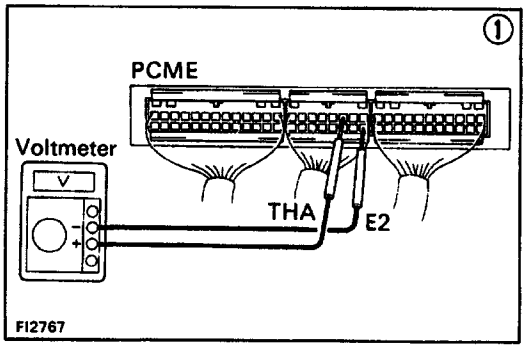

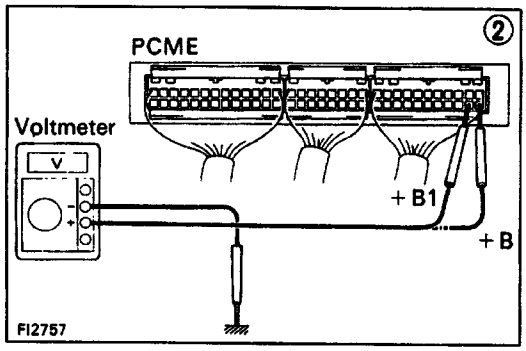

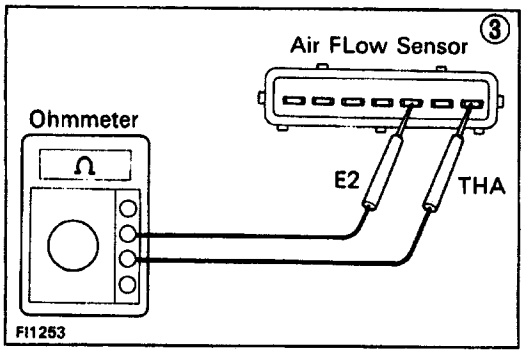

① There is no voltage between PCME terminals THA and E2. (IG SW ON)

② Check that there is voltage between PCME terminal + B (+ 131) and body ground. (IG SW ON)

OK → Check wiring between PCME terminal E1 and body ground.

NO → Refer to No.1. (See page EG1–296)

OK → ③ Check intake air temp. sensor (See page EG1–358)

BAD → Repair or replace.

BAD → Replace air flow sensor.

OK → Check wiring between PCME and intake air temp. sensor

OK → Try another PCME.

BAD → Repair or replace.

V00901

No.	Terminals	Trouble	Condition		STD voltage
7	THW – E2	No voltage	IG SW ON	Coolant temperature 80°C (176°F)	0.2 – 1.0 V

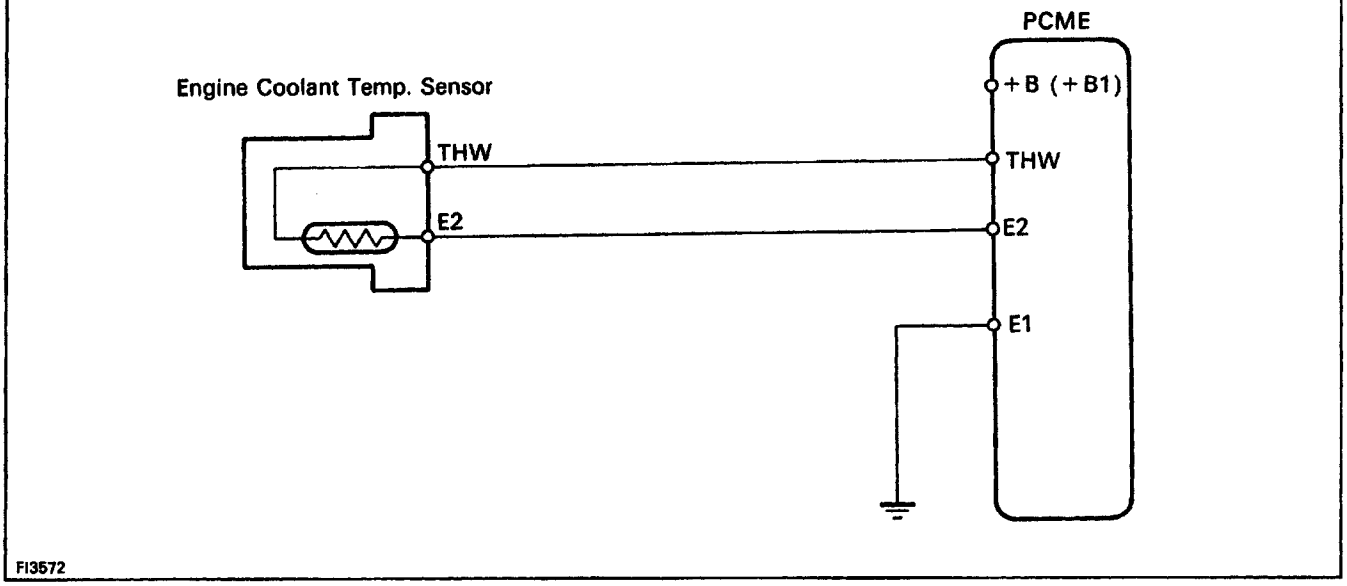

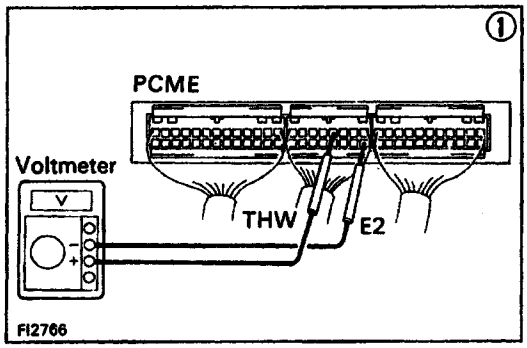

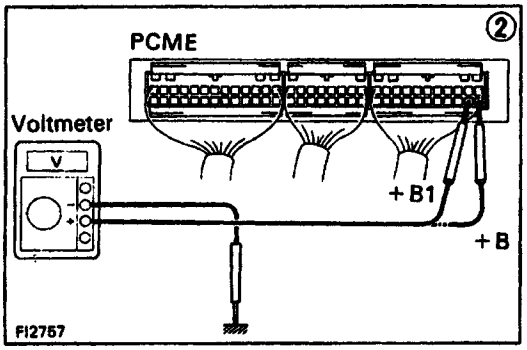

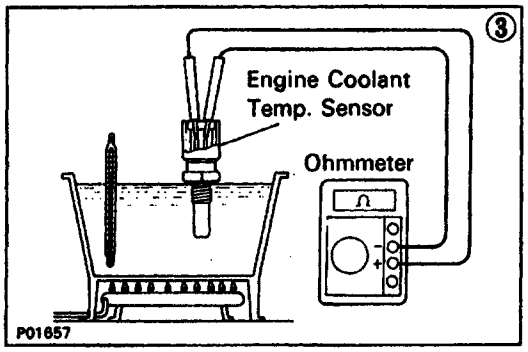

① There is no voltage between PCME terminals THW and E2. (IG SW ON)

② Check that there is voltage between PCME terminal + B (+ B1) and body ground. (IG SW ON)

OK → Check wiring between PCME terminal E1 and body ground.

NO → Refer to No.1. (See page EG1–296)

OK → ③ Check engine coolant temp. sensor. (See page EG1–378)

BAD → Repair or replace.

BAD → Replace engine coolant temp. sensor.

OK → Check wiring between PCME and engine coolant temp. sensor.

OK → Try another PCME.

BAD → Repair or replace.

V00902

No.	Terminals	Trouble	Condition	STD voltage
8	**STA – E1**	No voltage	Cranking	**6 V or more**

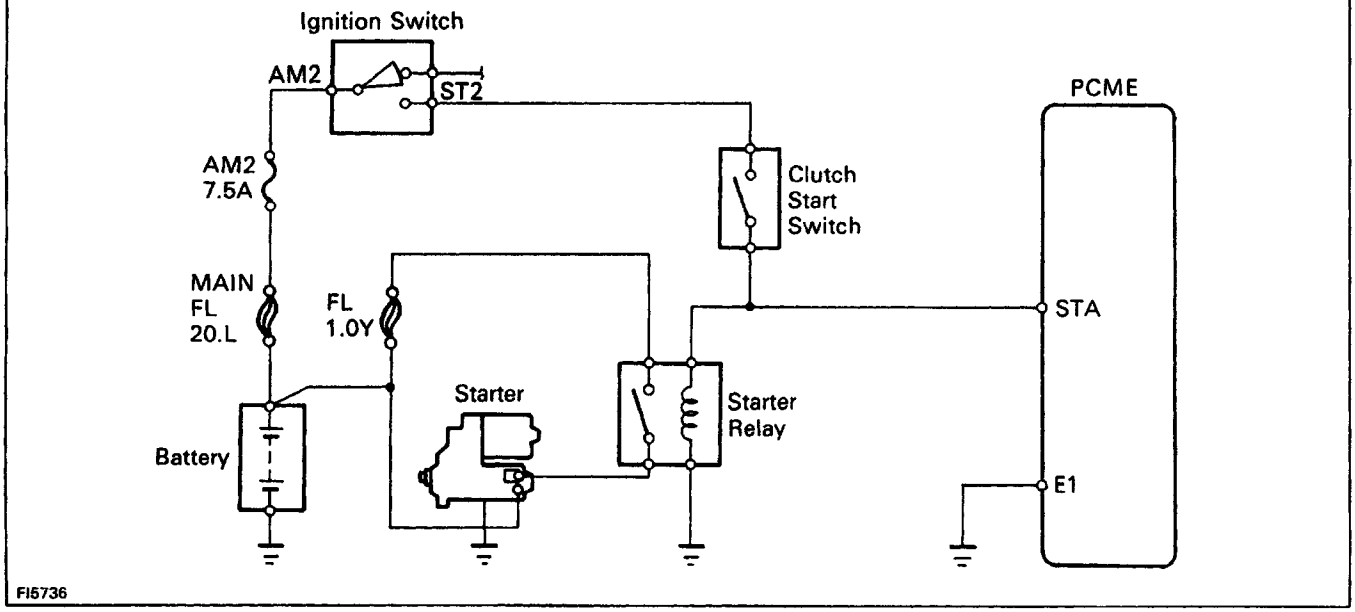

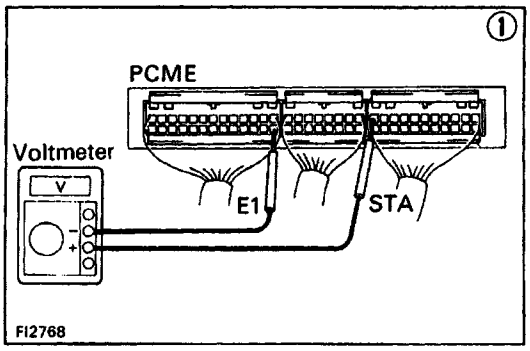

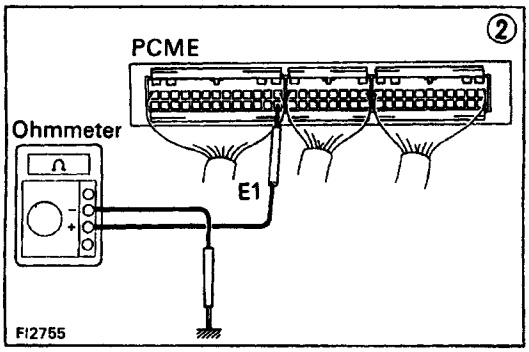

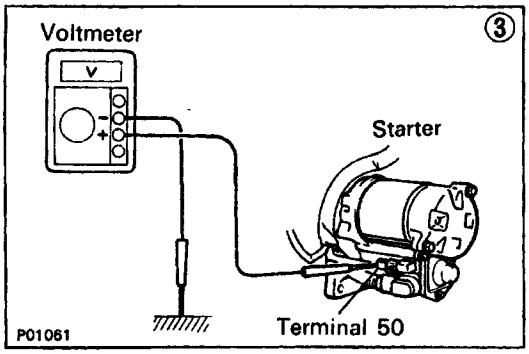

① There is no voltage between PCME terminals STA and EI. (IG SW ON)

Check starter operation. — OK → Check wiring between PCME terminal STA and ignition switch terminal ST2.

Check starter operation. — BAD → Check fuse, H–fuse, fusible link, battery, wiring, ignition switch, clutch start switch and starter relay.

Check wiring between PCME terminal STA and ignition switch terminal ST2. — OK → ② Check wiring between PCME terminal E1 and body ground.

Check wiring between PCME terminal STA and ignition switch terminal ST2. — BAD → Repair or replace.

② Check wiring between PCME terminal E1 and body ground. — OK → Try another PCME.

② Check wiring between PCME terminal E1 and body ground. — BAD → Repair or replace.

Check fuse, H–fuse, fusible link, battery, wiring, ignition switch, clutch start switch and starter relay. — BAD → Repair or replace.

Check fuse, H–fuse, fusible link, battery, wiring, ignition switch, clutch start switch and starter relay. — OK → ③ Check that there is voltage at starter terminal 50. (IG SW START) STD voltage: 6 V or more

③ Check that there is voltage at starter terminal 50. (IG SW START) STD voltage: 6 V or more — OK → Check starter.

③ Check that there is voltage at starter terminal 50. (IG SW START) STD voltage: 6 V or more — NO → Check wiring between ignition switch terminal ST2 and starter terminal 50.

V00903

No.	Terminals	Trouble	Condition	STD voltage
9	**IGT – E1**	No voltage	Idling	**Pulse generation**

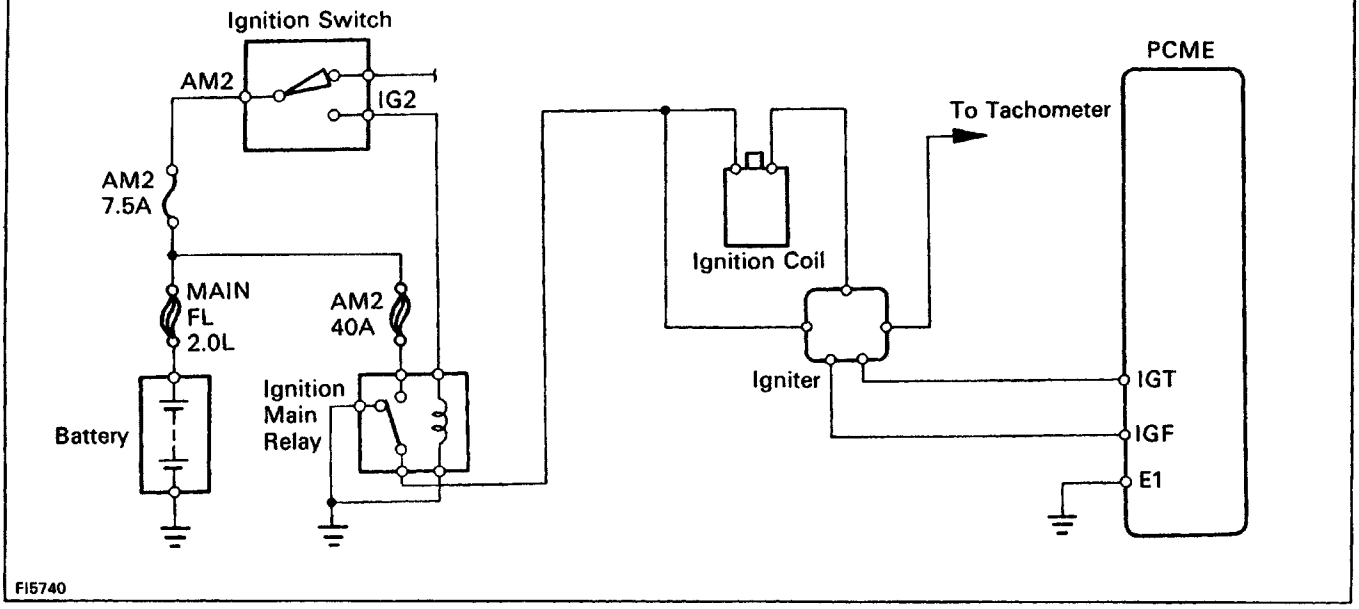

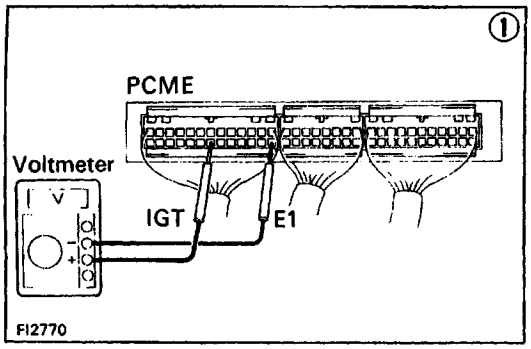

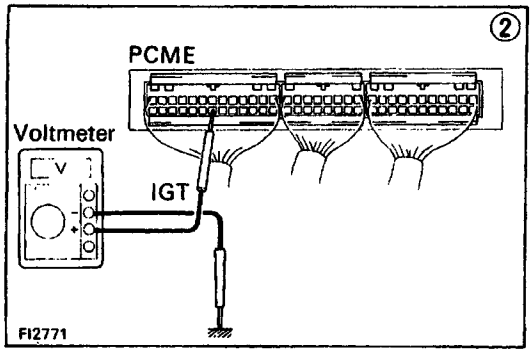

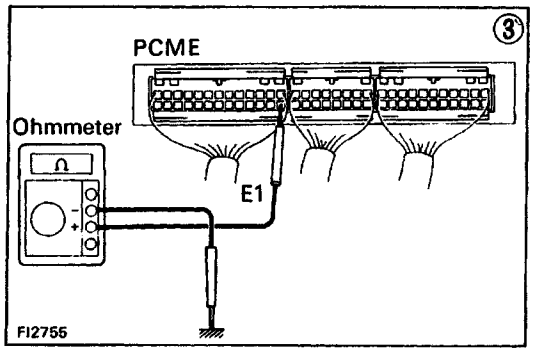

1 There is no voltage between PCME terminals IGT and E1. (Idling)

↓

2 Check that there is voltage between PCME terminal IGT and body ground. (idling)

NO → OK

NO → ~ Check wiring between PCME terminal E1 and body ground. → BAD → Repair or Replace.

OK → Try another PCME.

OK → Check fuse, H–fuse, fusible link, ignition switch and ignition main relay. → BAD → Repair or replace.

OK → Check distributor. (See IG section) → BAD → Repair or replace.

OK → Check wiring between PCME and battery. → BAD → Repair or replace.

OK → Check igniter. (See IG section) → BAD → Repair or replace.

V00904

No.	Terminals	Trouble	Condition		STD voltage
10	RSC – E1 RSO	No voltage	IG SW O N	PCME connecters disconnected	9 – 14 V

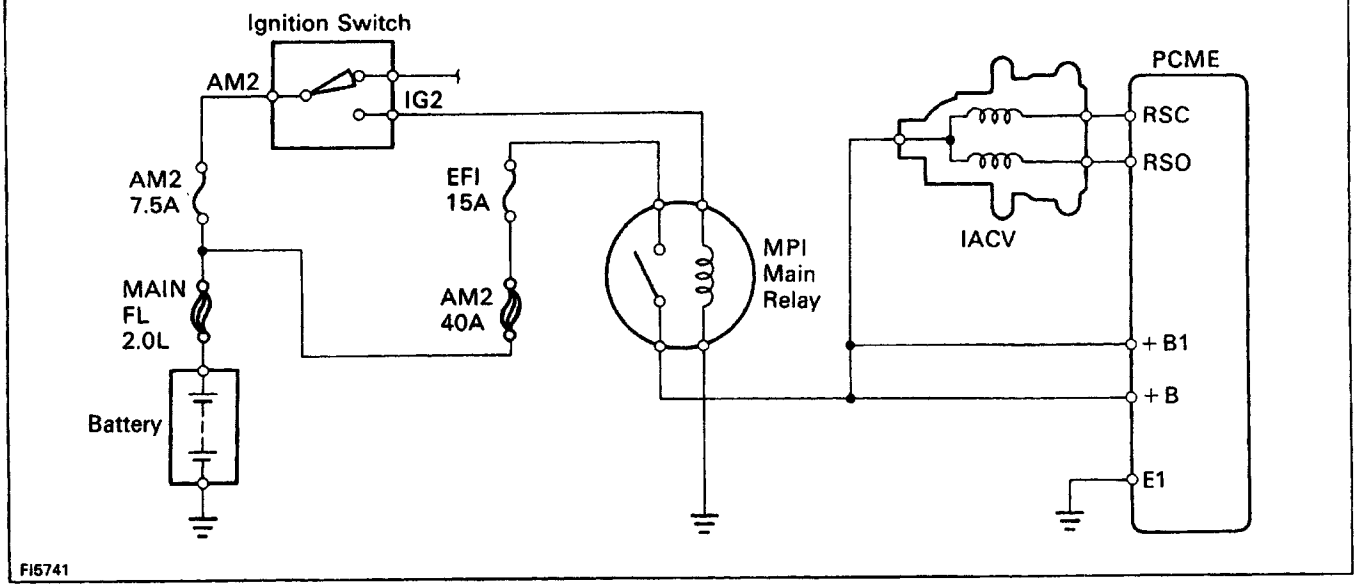

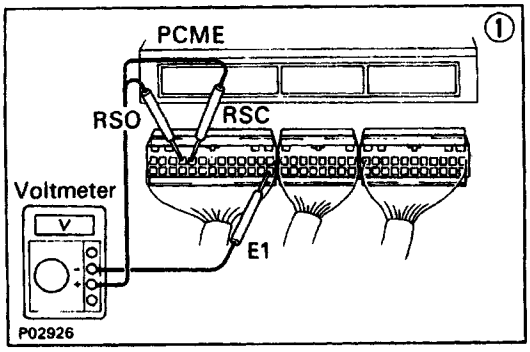

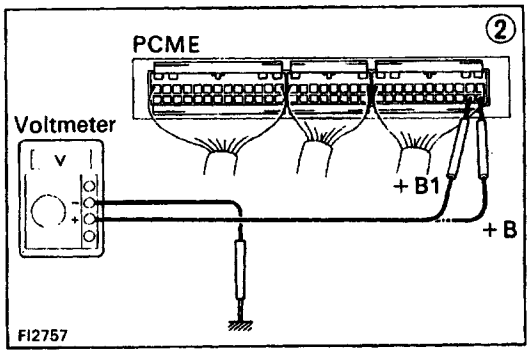

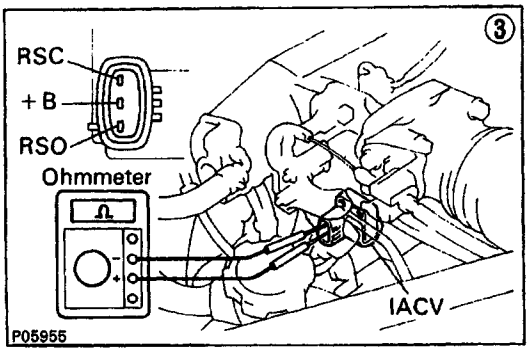

① There is no voltage between PCME terminals RSC or RSO and E1. (IG SW ON)

↓

② Check that there is voltage between PCME terminal + B (+ B1) and body ground. (IG SW ON)

OK ↓

NO → Refer to No–1 . (See page EG1–296)

③ Check resistance between IACV terminals + B and RSC or RSO. STD resistance: 17.7 – 23.9 0

BAD → Replace IACV.

OK ↓

Check wiring between PCME and IACV.

BAD → Repair or replace wiring.

OK ↓

Try another PCME.

V00905

No.	Terminals	Trouble	Condition	STD voltage
11	**W – E1**	No voltage	No trouble ("CHECK" engine warning light off) and engine running.	**9 – 14 V**

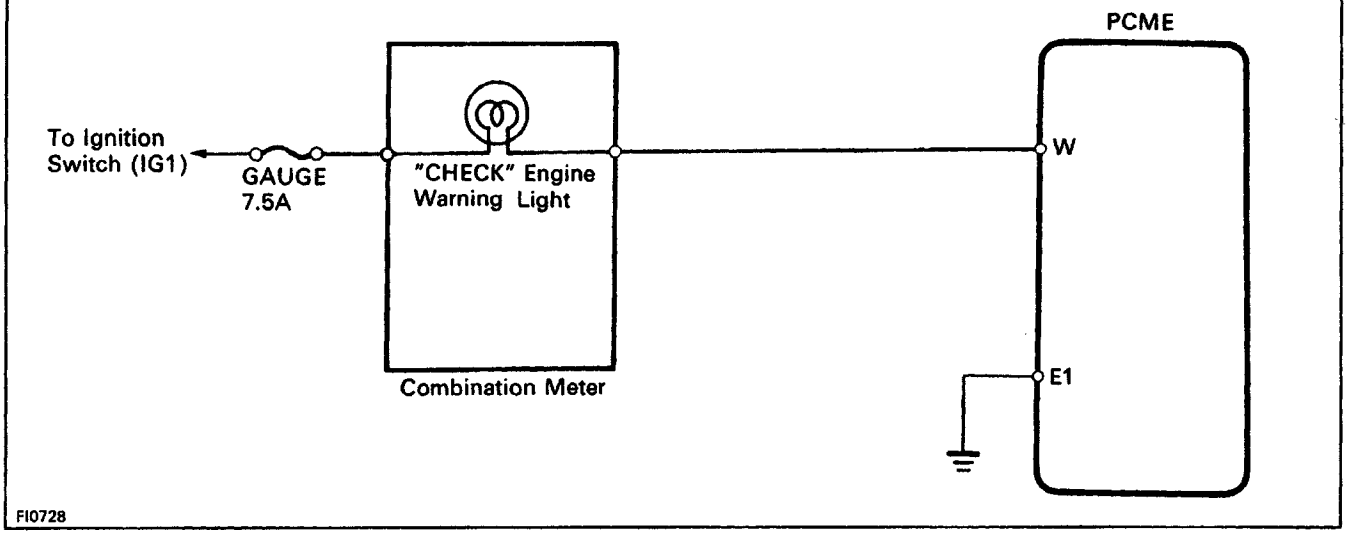

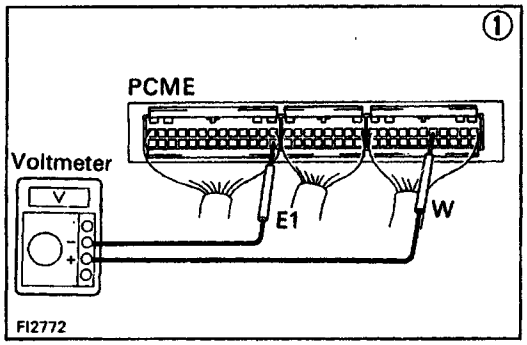

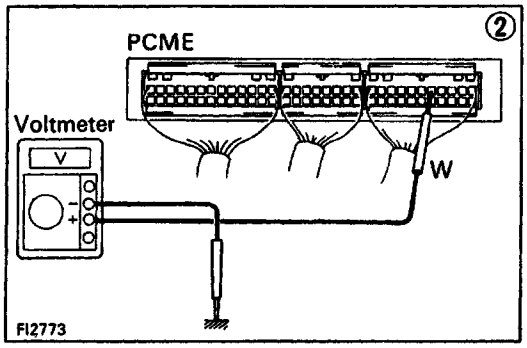

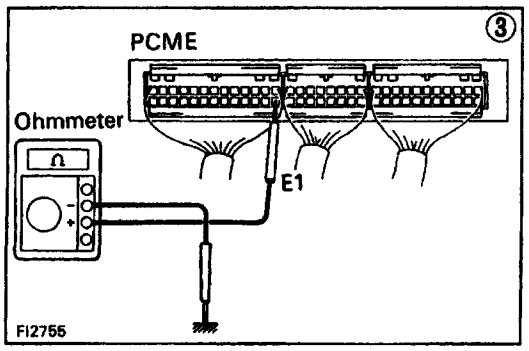

① There is no voltage between PCME terminals W and E1. (Idling)

↓

② Check that there is voltage between PCME terminal w and body ground.

NO ← | → OK

OK: Check wiring between PCME terminal E1 and body ground.

OK → Try another PCME.

BAD → Repair or replace.

Check fuse GAUGE (7.5 A) and check engine warning light.

OK

BAD → Repair or replace.

Fuse blows again

Check wiring between PCME terminal W and fuse.

BAD → Repair or replace.

V00906

No.	Terminals	Trouble	Condition	STD voltage
12	PIM – E2	No voltage	IG SW ON	2.5 – 4.5 V
	VC – E2			4.5 – 5.5 V

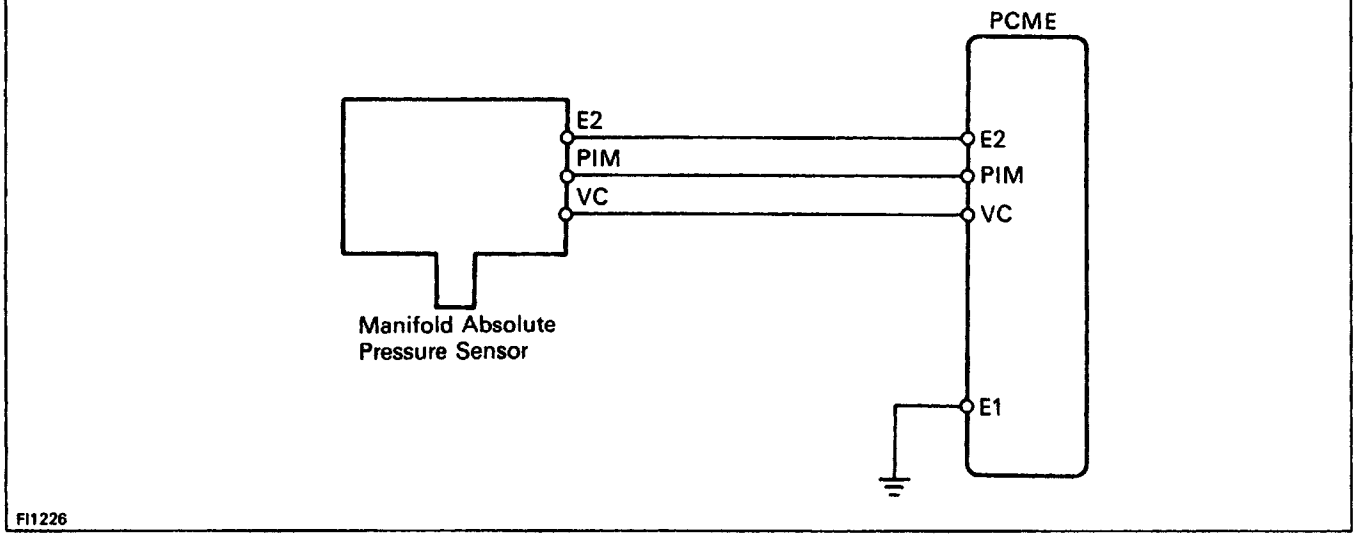

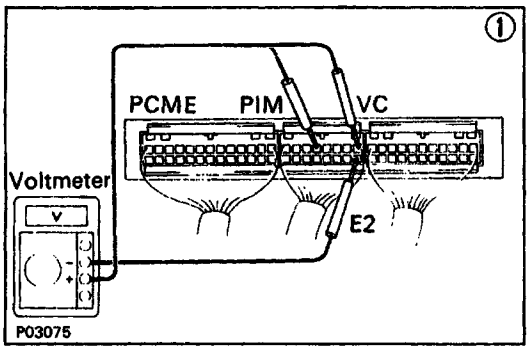

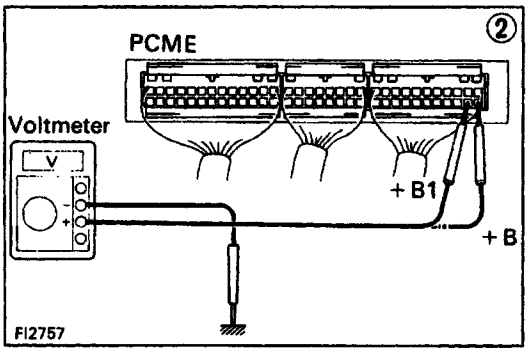

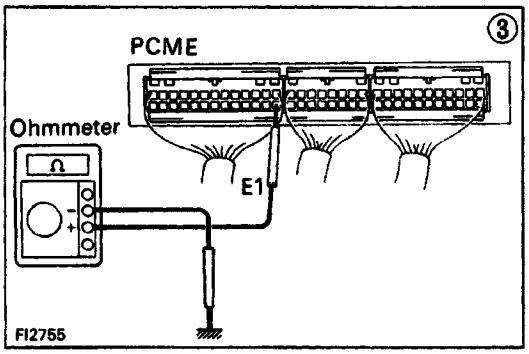

① There is no voltage between PCME terminals PIM or VC and E2. (IG SW ON)

↓

② Check that there is voltage between PCME terminal + B or + 131 and body ground. OG SW ON)

OK → ↓

NO → Refer to No.1. (See page EG1–296)

↓

③ Check wiring between PCME terminal E1 and body ground.

OK → ↓

BAD → Repair or replace.

↓

Check manifold absolute pressure sensor. (See page EG1–400)

BAD → Replace manifold absolute pressure sensor.

OK → ↓

Check wiring between PCME and manifold absolute pressure sensor.

OK → ↓

BAD → Repair or replace.

Try another PCME.

V00907

No.	Terminals	Trouble	Condition	STD voltage
13	AC – E1	No voltage	Air conditioning ON	9 – 14 V

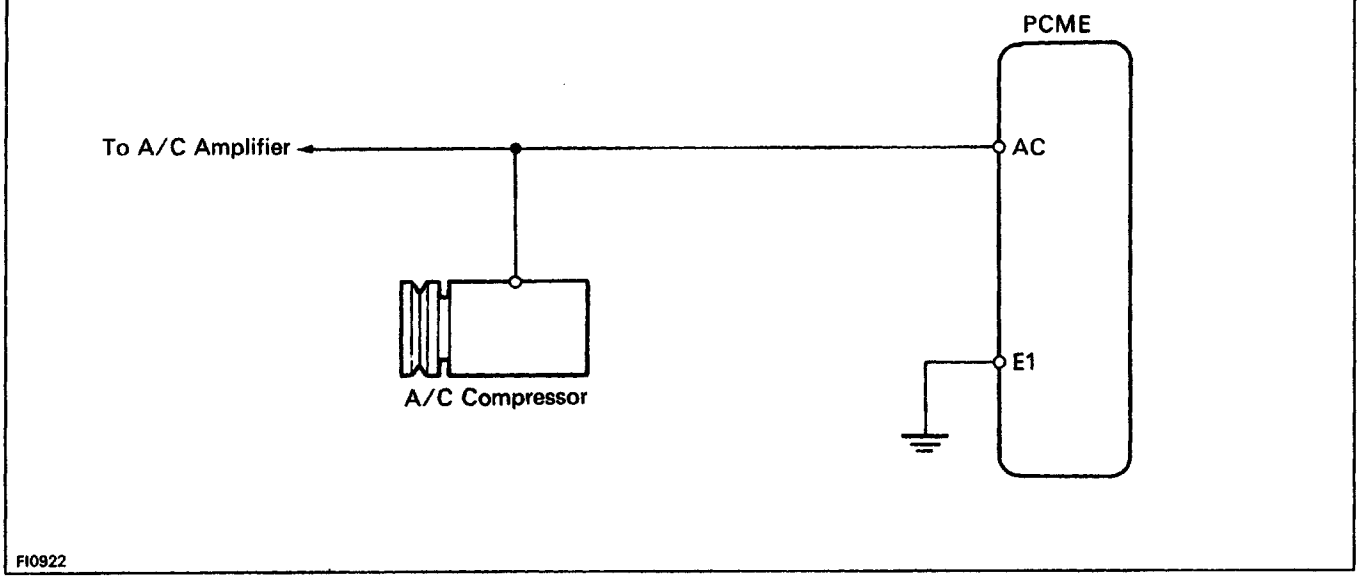

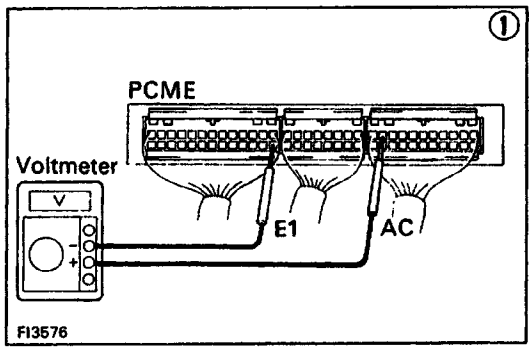

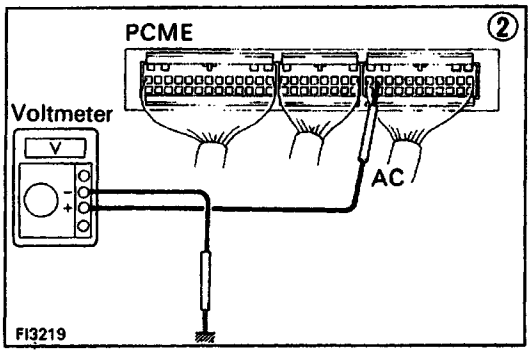

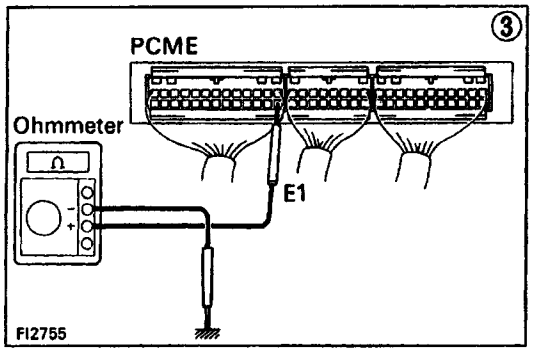

1 There is no voltage between PCME terminals AC and E1.
Air conditioning ON)

2 Check that there is voltage between PCME terminal AC and body ground.

NO

OK

3 Check wiring between PCME terminal E1 and body ground.

OK

Try another PCME.

BAD

Repair or replace.

Check compressor running.

OK

Check wiring between PCME terminal AC and amplifier.

BAD

BAD

Repair or replace.

Check that there is voltage between amplifier terminal and body ground.

BAD

Repair or replace.

OK

Check wiring between amplifier and PCME or compressor.

BAD

Repair or replace.

V00908

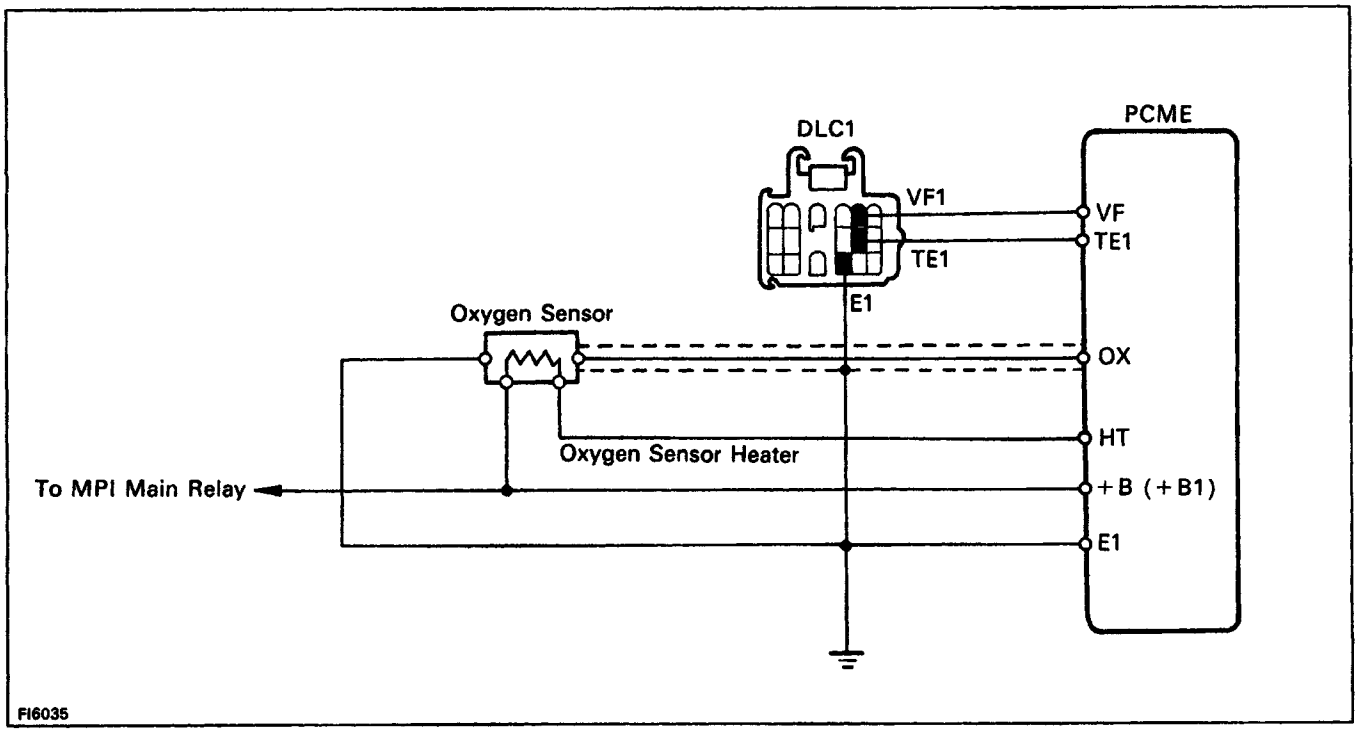

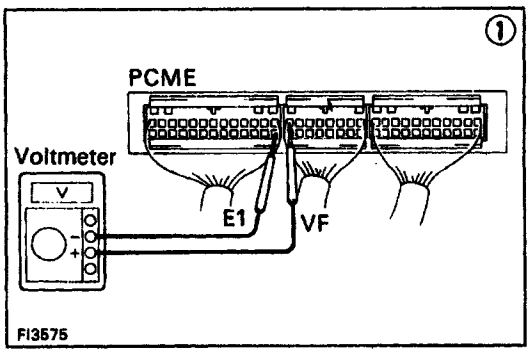

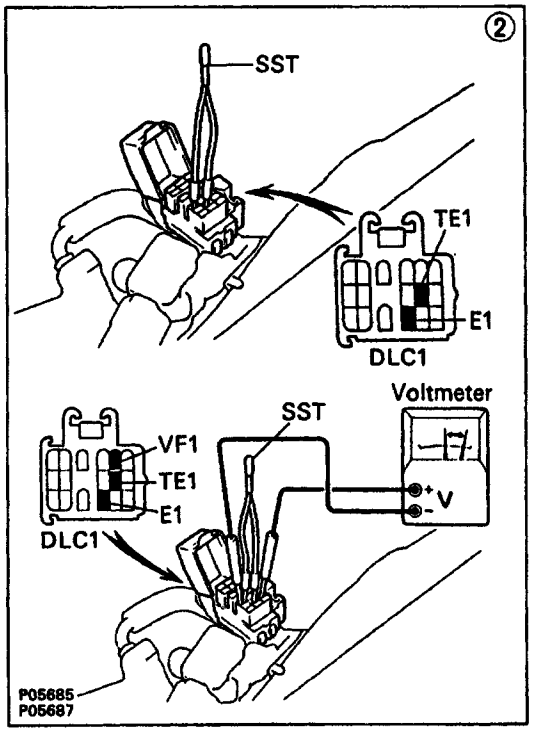

There is no voltage between PCME terminals VF and E1.

Check that there is specified voltage between PCME terminals VF and body ground.

NO → OK: Check wiring between PCME terminal E1 and body ground.
- BAD → Repair or replace.
- OK → Try another PCME.

Check for air suction into exhaust system.
- BAD → Repair air suction.
- OK ↓

Check for air leak from air intake system.
- BAD → Repair air leak.
- BAD → Repair air leak.
- BAD → Repair air leak.
- OK ↓

Check spark plugs.
- → Repair or replace.
- OK ↓

Check distributor and ignition system.
- → Repair or replace.
- OK ↓

Check fuel pressure.
- BAD → Repair or replace.
- BAD → Repair or replace.
- BAD → Repair or replace.
- OK ↓

Check injectors.
- BAD → Repair or replace.
- OK ↓

Check cold start injector.
- OK → Repair or replace.
- → Repair or replace.
- OK ↓

Check air flow sensor.
- → Repair or replace.
- OK ↓

Check operation of oxygen sensor.
- → System normal
- BAD ↓

Check wiring between oxygen sensor and PCME connectors.
- BAD → Repair wiring.
- OK ↓

Replace oxygen sensor.

* Rich malfunction only

V00909

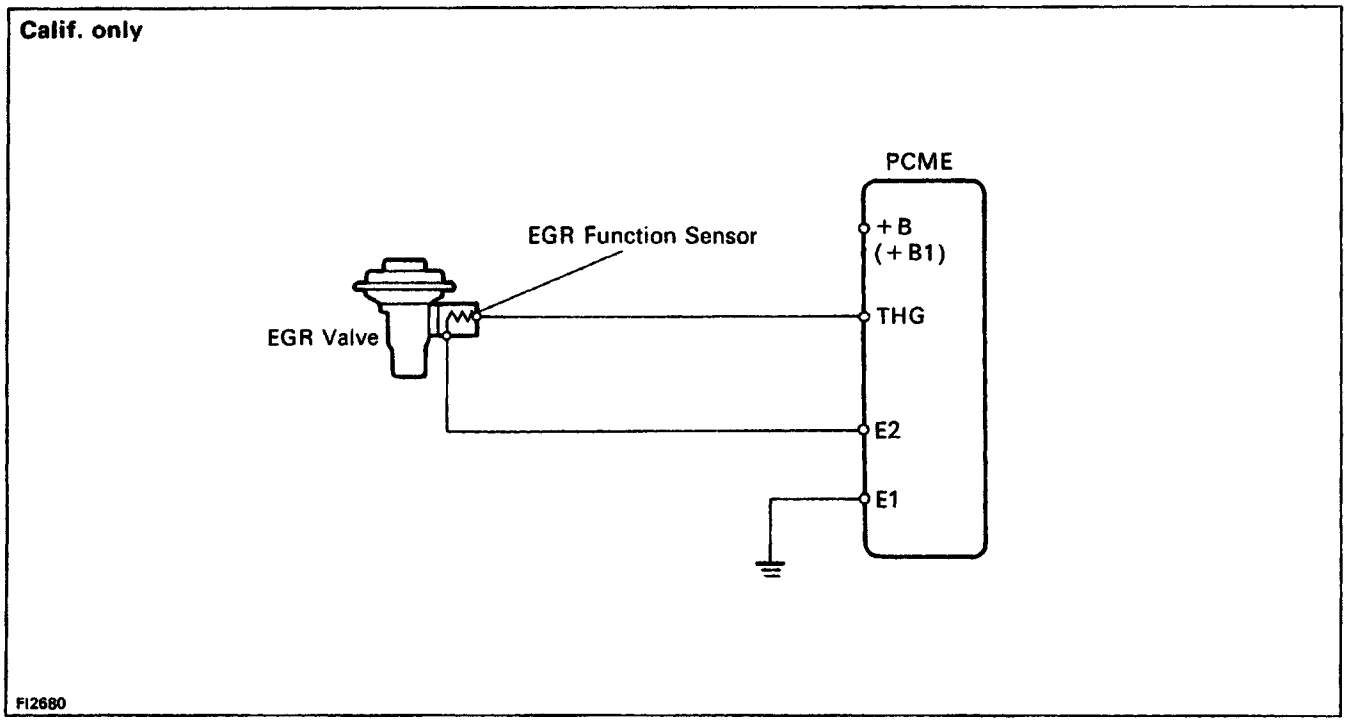

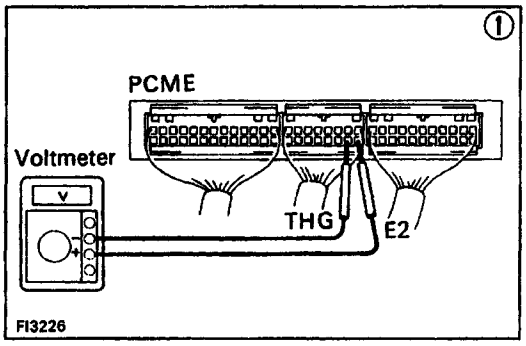

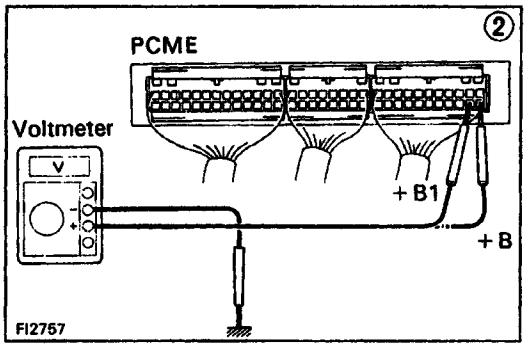

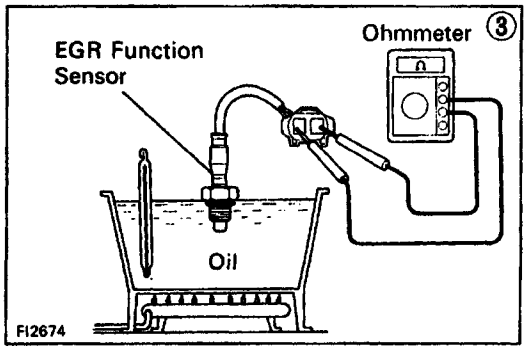

① There is no voltage between PCME terminals THG and E2. (IG SW ON)

② Check that there is voltage between PCME terminal + B or + 81 and body ground. (IG SW ON)

OK

NO → Refer to No.1. (See page EG1–296)

Check wiring between PCME terminal E1 and body ground.

OK

BAD → Repair or replace.

Check EGR system (See page EG1–243)

BAD → Repair or replace.

OK

③ Check EGR function sensor. (See page EG1–402)

BAD → Replace EGR function sensor.

OK → Check wiring between PCME and EG R function sensor.

OK → Try another PCME.

BAD → Repair or replace.

V00910

VSV
(For EGR)

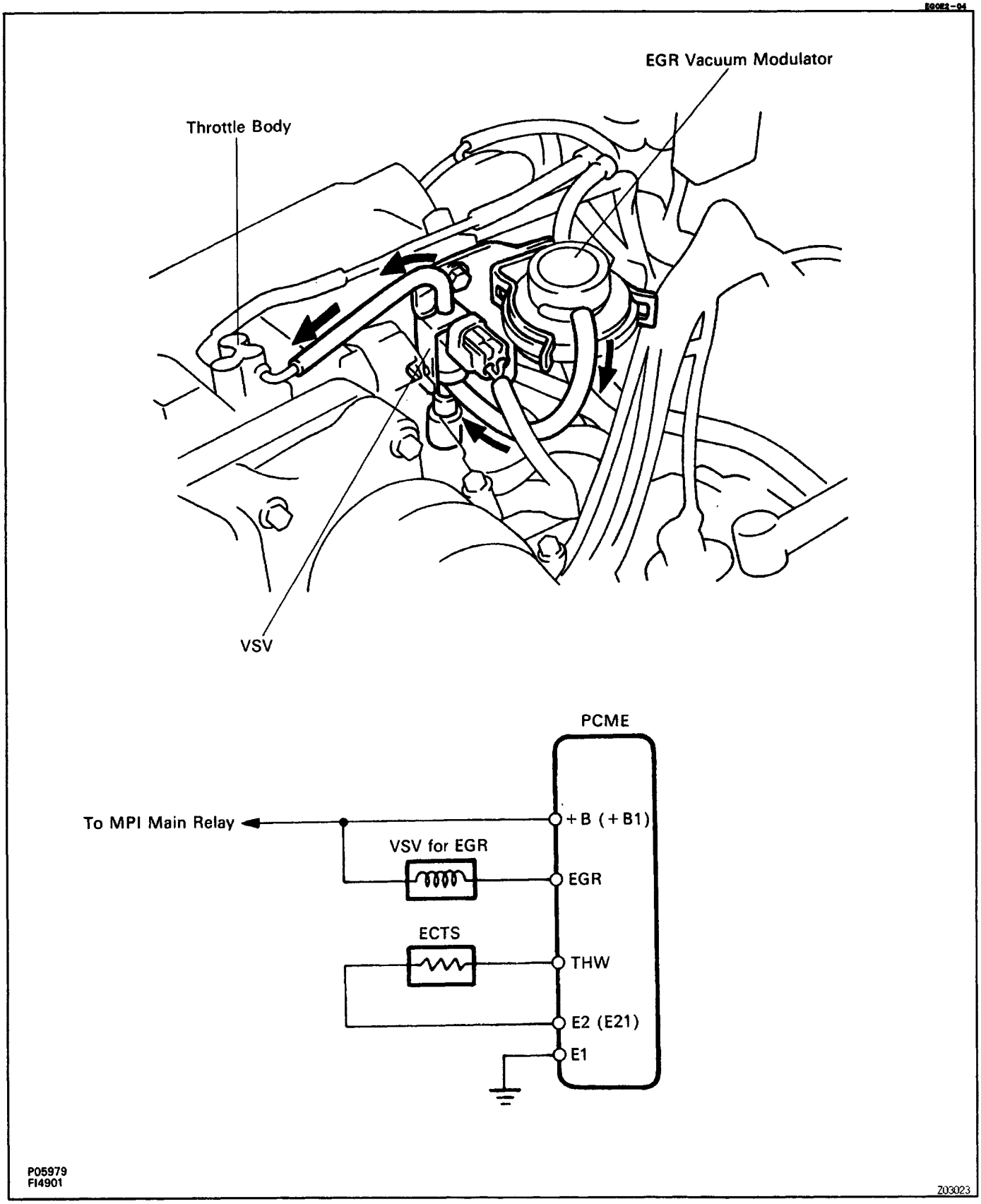
EGR Vacuum Modulator
Throttle Body
VSV
PCME
To MPI Main Relay
+B (+B1)
VSV for EGR
EGR
ECTS
THW
E2 (E21)
E1
P05979
FI4901
Z03023

EG0Z2–01

COMPONENTS FOR REMOVAL AND INSTALLATION

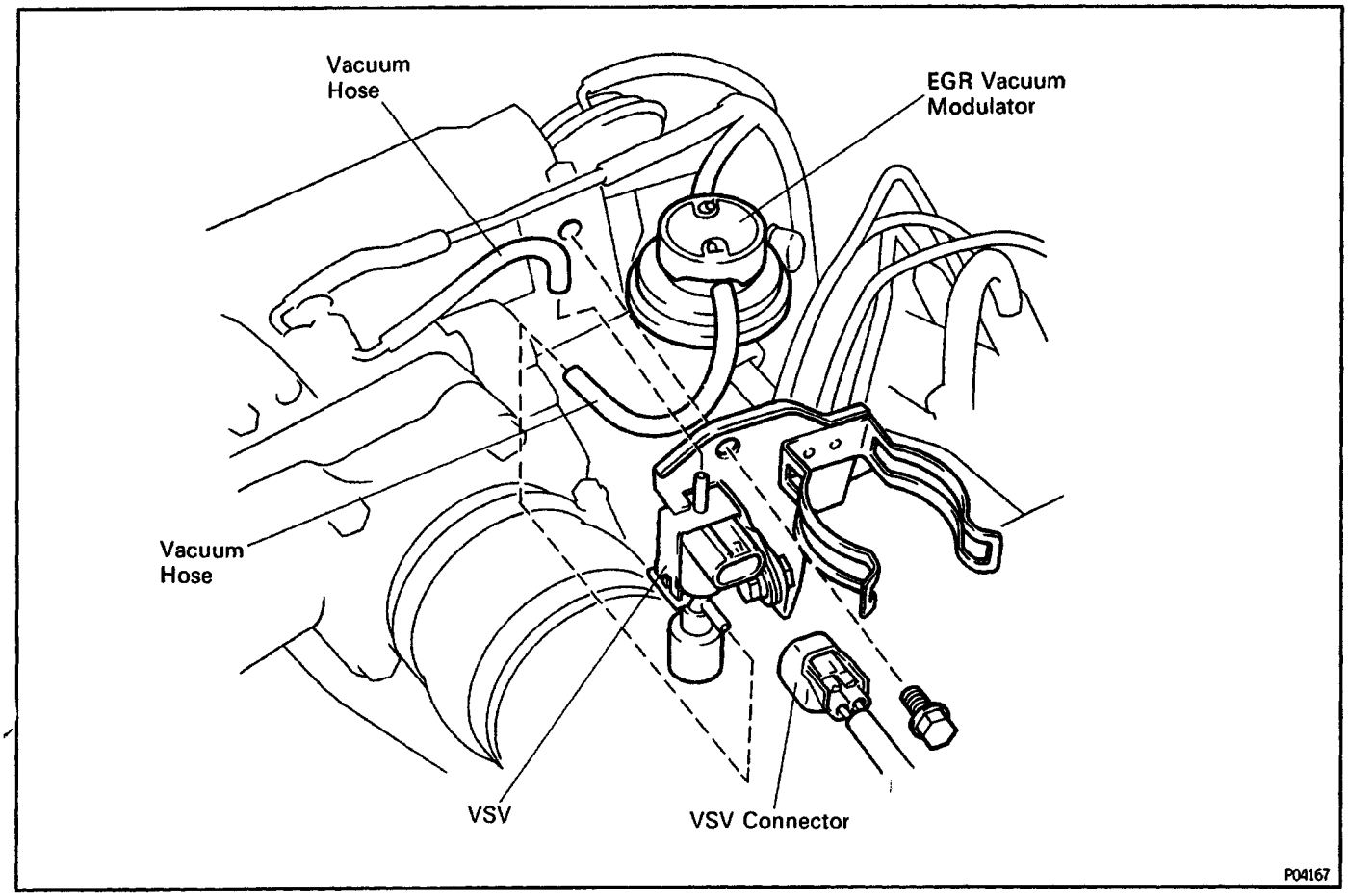

EG0Z3–01

VSV INSPECTION

(See Components for Removal and Installation)

1. DISCONNECT CABLE FROM NEGATIVE TERMINAL OF BATTERY

CAUTION: Turn the ignition switch to 'LOCK'. Disconnect the negative terminal from the battery. Wait at least 20 seconds before proceeding with work.

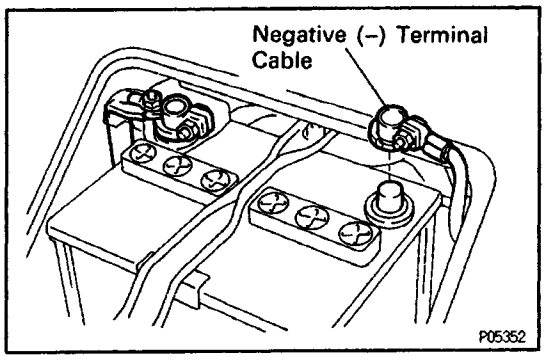

2. REMOVE VSV

(a) Disconnect the following connector and hoses:

(1) VSV connector

(2) Vacuum hose (from EGR vacuum modulator) from port E of VSV

(3) Vacuum hose (from throttle body) from port G of VSV

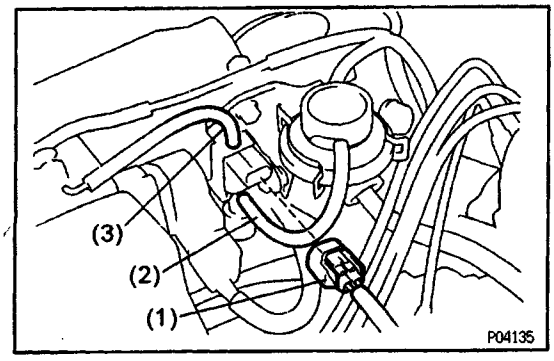

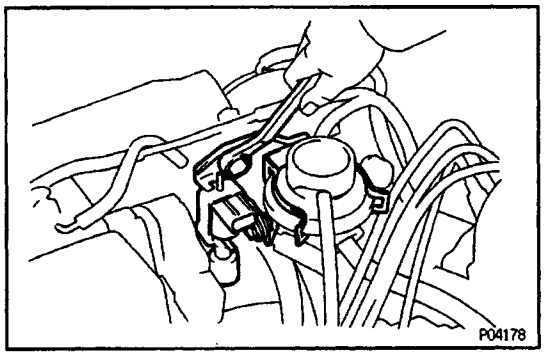

(b) Remove the bolt, and disconnect the VSV from the intake manifold.

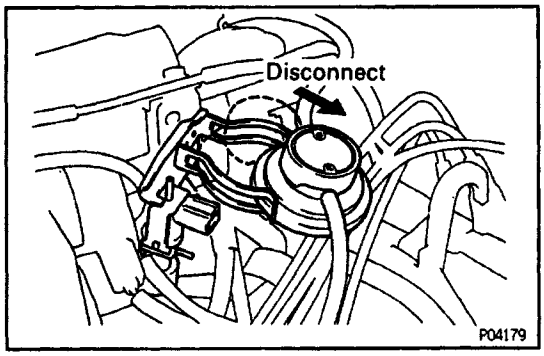

(c) Disconnect the clamp from the EGR vacuum modulator, and remove the VSV.

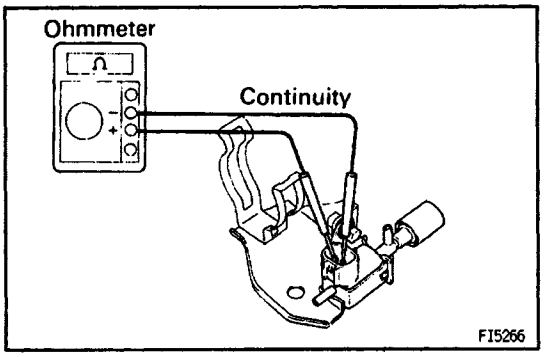

3. INSPECT VSV

A. Inspect VSV for open circuit

Using an ohmmeter, check that there is continuity between the terminals.

Resistance (Cold):

33–39Ω

If there is no continuity, replace the VSV.

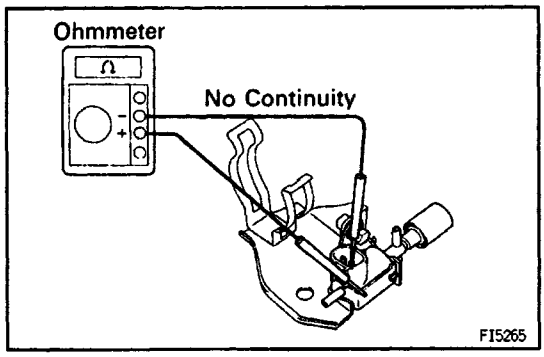

B. Inspect VSV for ground

Using an ohmmeter, check that there is no continuity between each terminal and the body.

If there is continuity, replace the VSV.

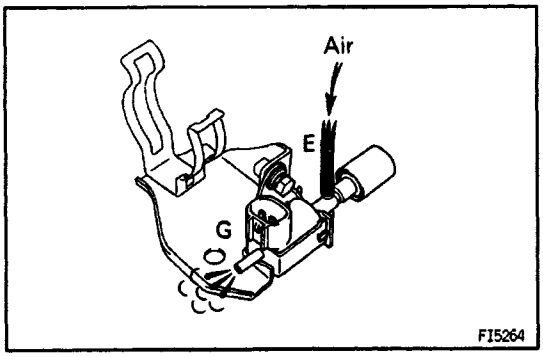

C. Inspect VSV operation

(a) Check that the air flows from port E to port G.

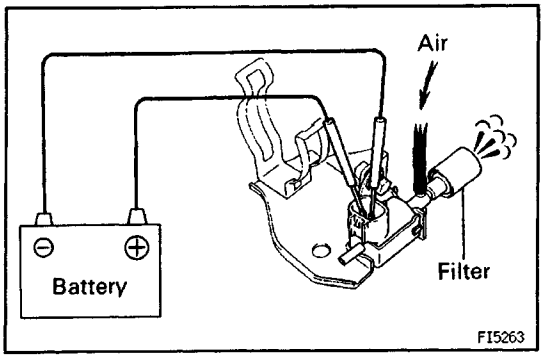

(b) Apply battery voltage across the terminals.
(c) Check that the air flows from port E to the filter.
If operation is not as specified, replace the VSV.

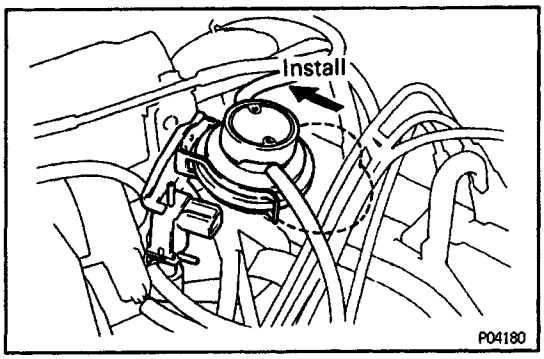

4. REINSTALL VSV

(a) Connect the EGR vacuum modulator to the EGR vacuum modulator.

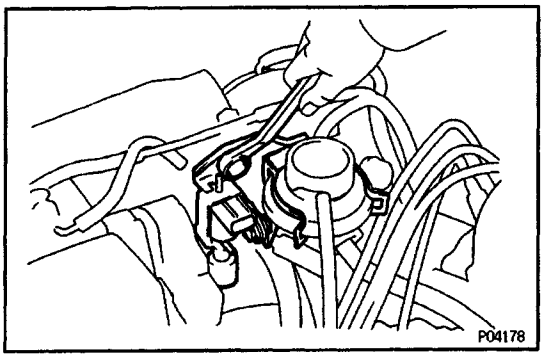

(b) Install the VSV with the bolt and screw.

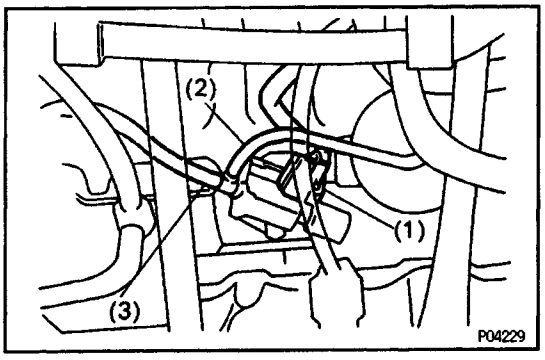

(c) Connect the following connector and hoses:
(1) VSV connector
(2) Vacuum hose (from EGR vacuum modulator) to port E of VSV
(3) Vacuum hose (from throttle body) to port G of VSV

5. RECONNECT CABLE TO NEGATIVE TERMINAL OF BATTERY

VSV
(For Turbocharging Pressure)

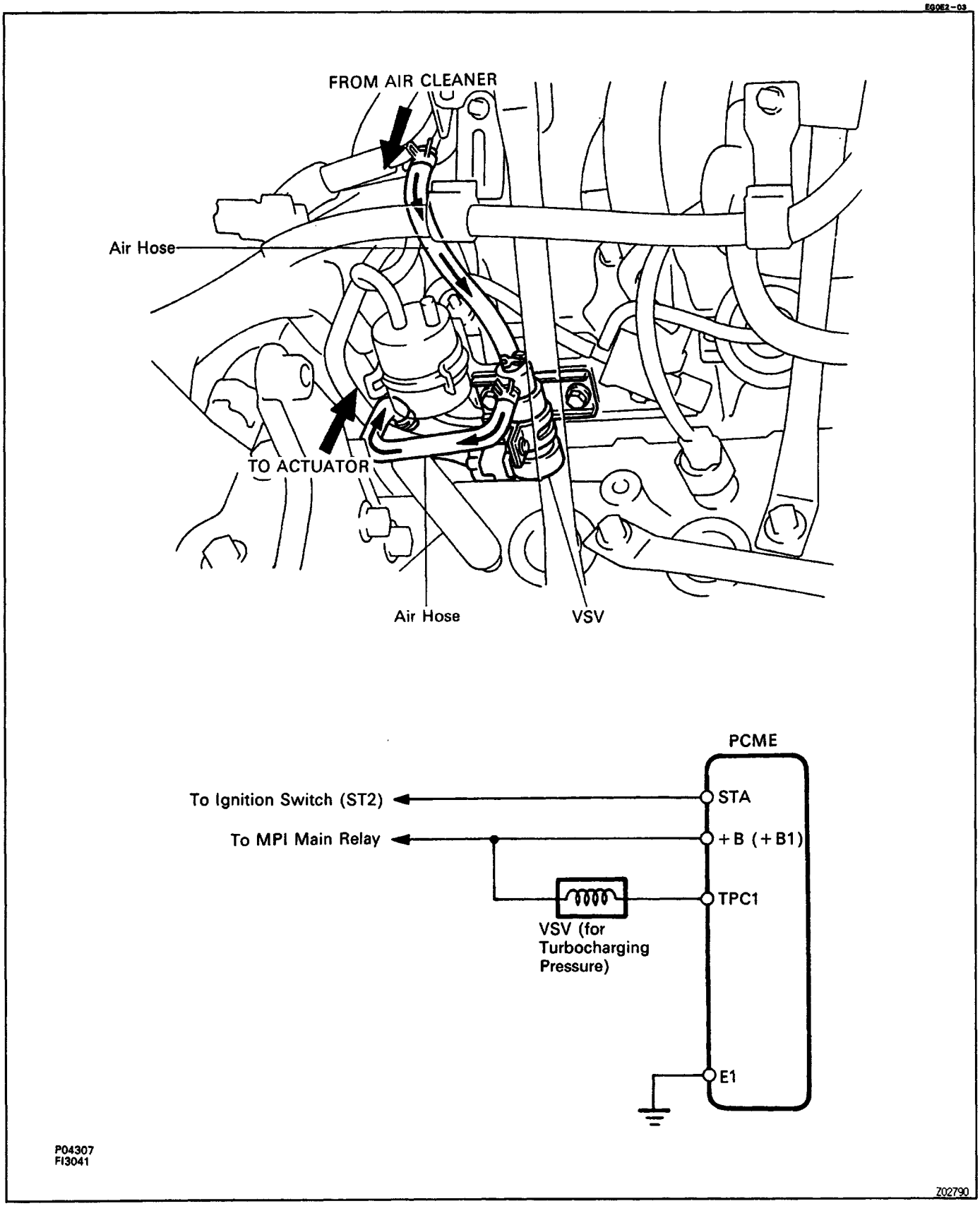

EGQZ0–01

COMPONENTS FOR REMOVAL AND INSTALLATION

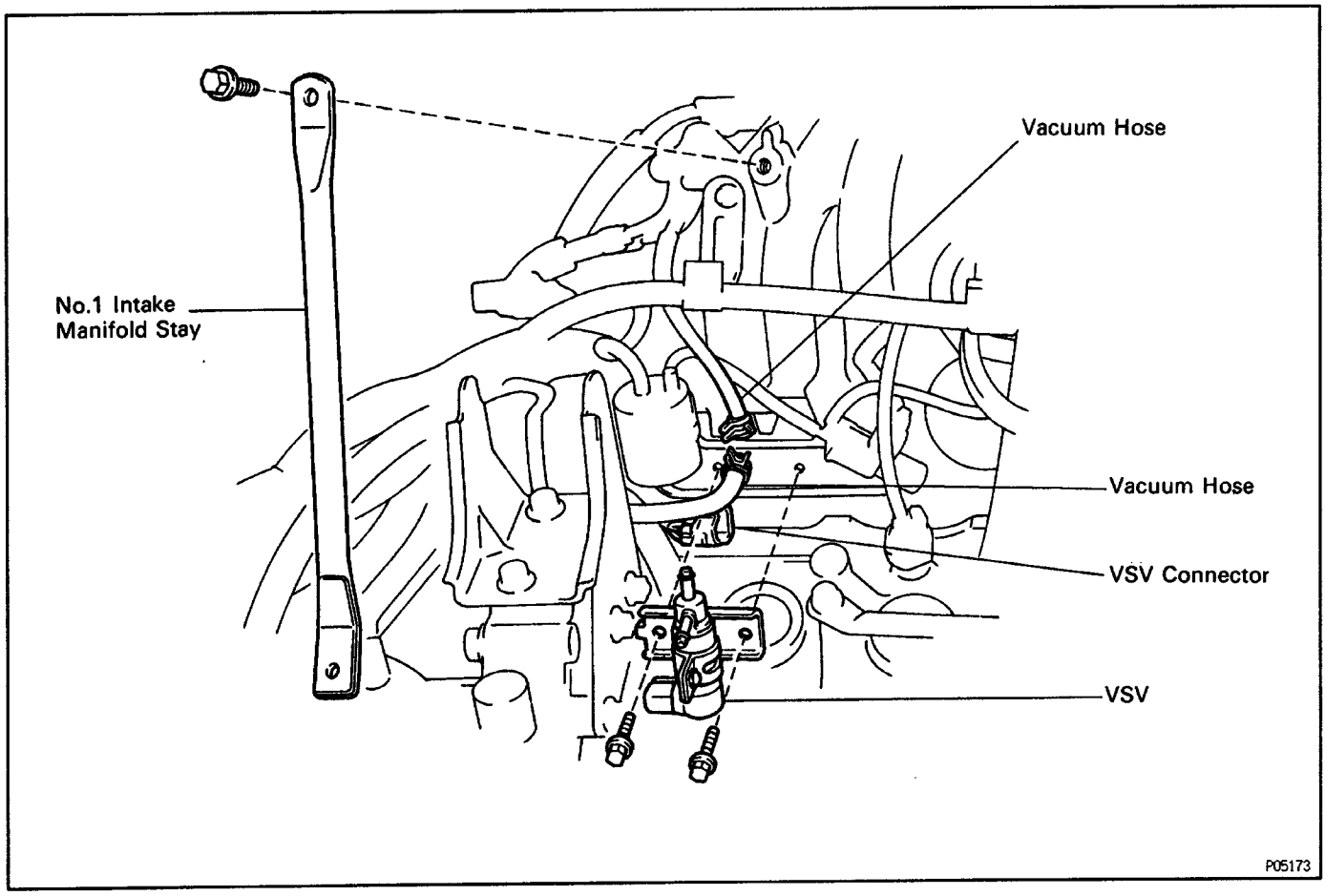

EGQZ1–01

VSV INSPECTION

(See Components for Removal and Installation)

1. DISCONNECT CABLE FROM NEGATIVE TERMINAL OF BATTERY

CAUTION: Turn the ignition switch to "LOCK". Disconnect the negative terminal from the battery. Wait at least 20 seconds before proceeding with work.

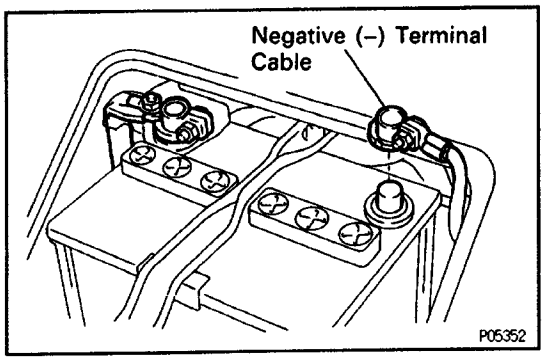

2. REMOVE NO.1 INTAKE MANIFOLD STAY

Remove the two bolts and intake manifold stay.

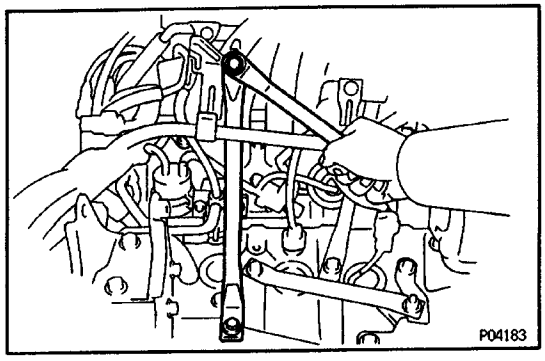

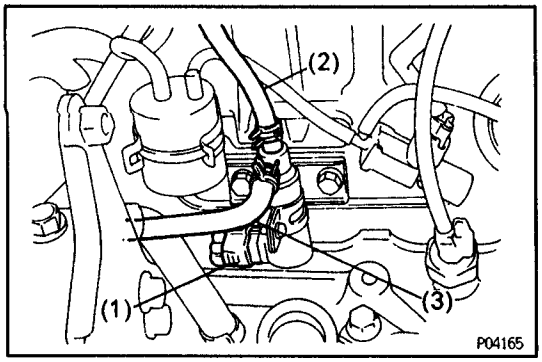

3. REMOVE VSV

(a) Disconnect the following connector and hoses:

(1) VSV connector
(2) Air hose (from actuator) from port E of VSV
(3) Air hose (from No.1 air tube) from port F of VSV

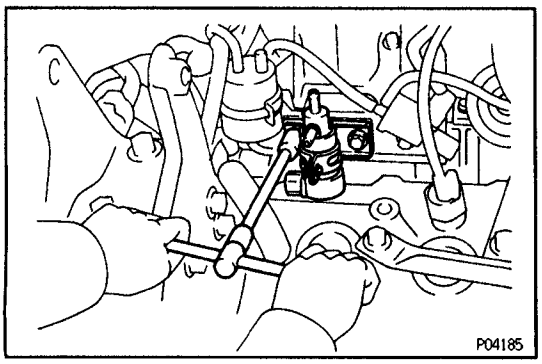

(b) Remove the two and VSV.

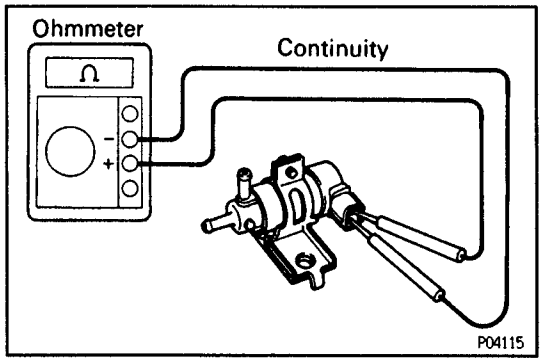

4. INSPECT VSV

A. Inspect VSV for open circuit

Using an ohmmeter, check that there is continuity between the terminals.

Resistance (Cold):

24–30Ω

If there is no continuity, replace the VSV.

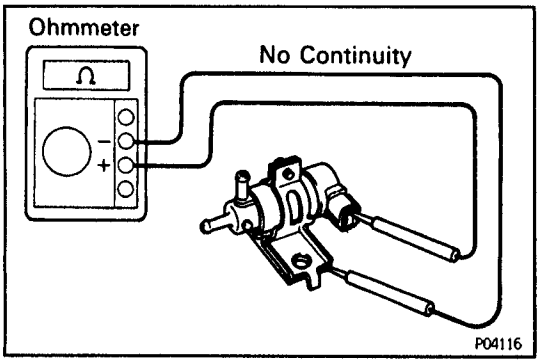

B. Inspect VSV for ground

Using an ohmmeter, check that there is no continuity between each terminal and the body.

If there is continuity, replace the VSV.

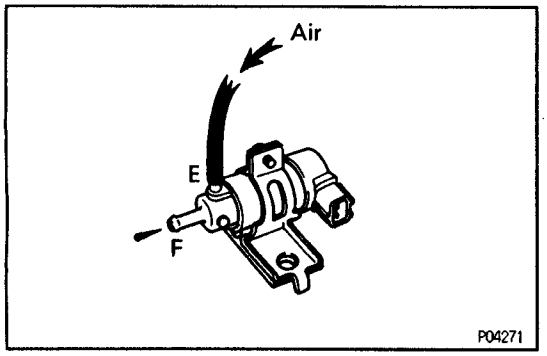

C. Inspect VSV operation

(a) Check that the air does not flow from port E to port F.

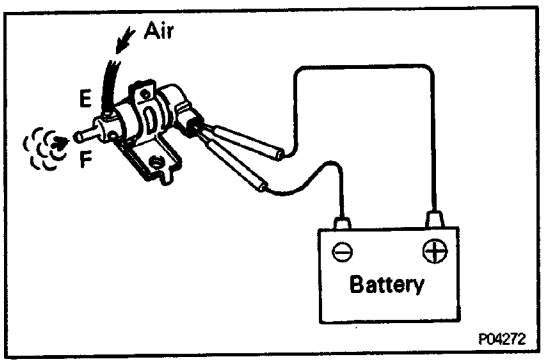

(b) Apply battery voltage across the terminals.
(c) Check that the air flows from port E to port F.
If operation is not as specified, replace the VSV.

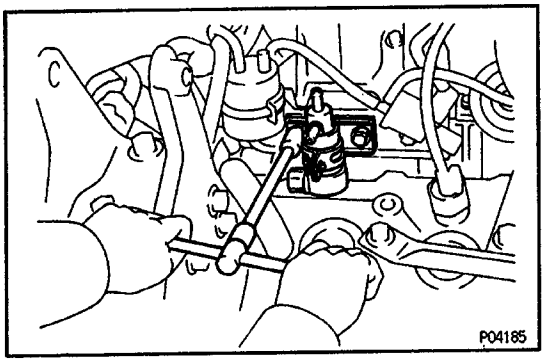

5. REINSTALL VSV

(a) Install the VSV with the bolt and screw.

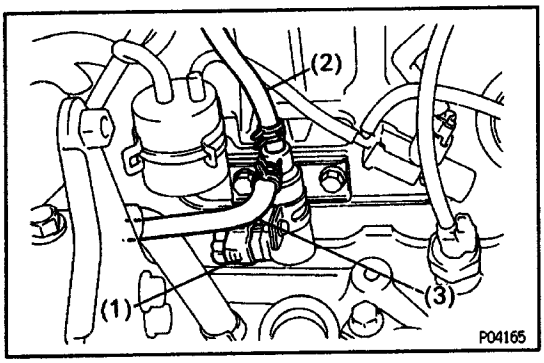

(b) Connect the following connector and hoses:
(1) VSV connector
(2) Air hose (from actuator) to port E of VSV
(3) Air hose (from No. 1 air tube) to port F of VSV

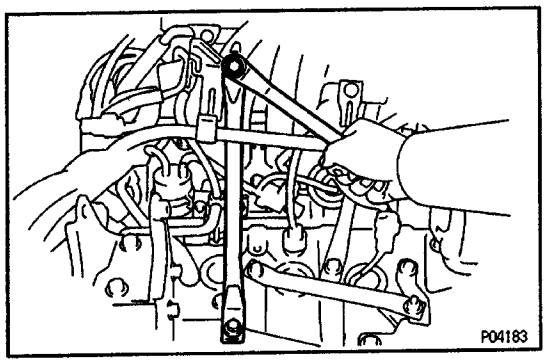

6. REINSTALL No.1 INTAKE MANIFOLD STAY

Install the intake manifold stay with the two bolts.
Torque: 25 N–m (260 kgf.cm, 19 ft–lbf)

7. RECONNECT CABLE TO NEGATIVE TERMINAL OF BATTERY

VSV
(For T–VIS)

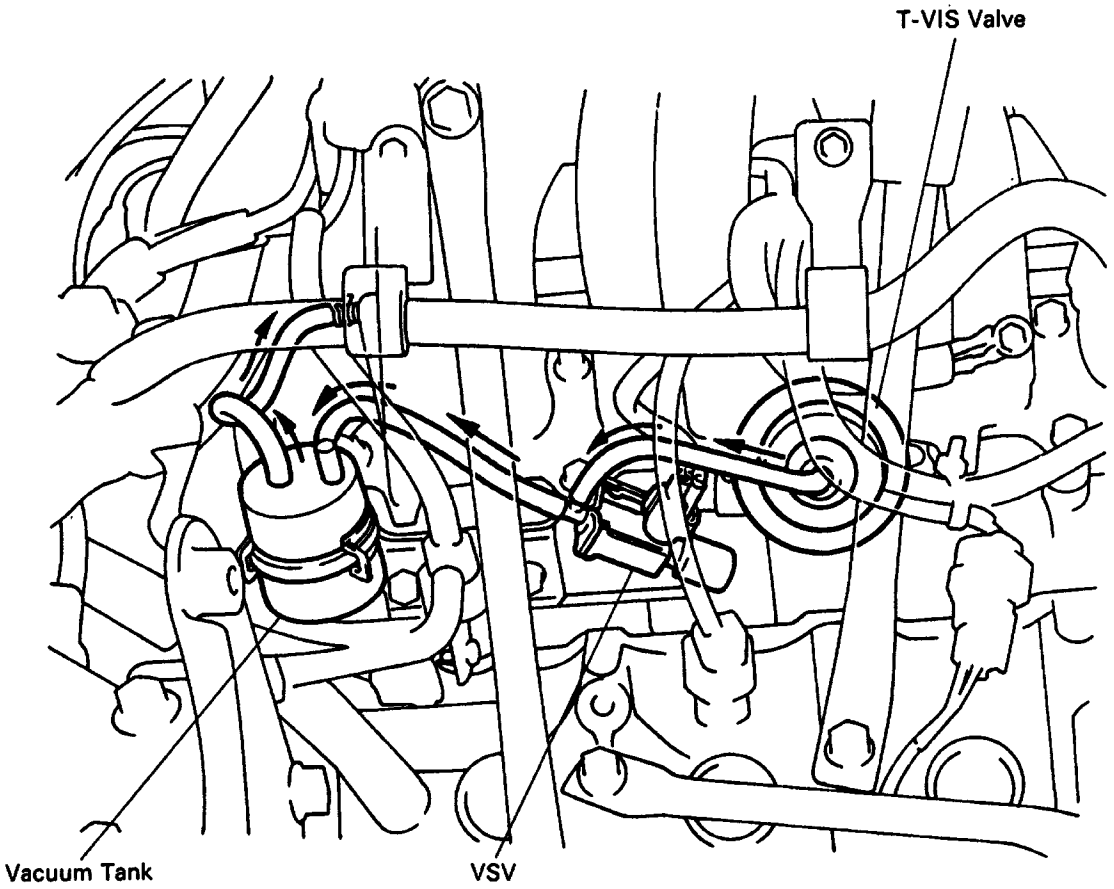

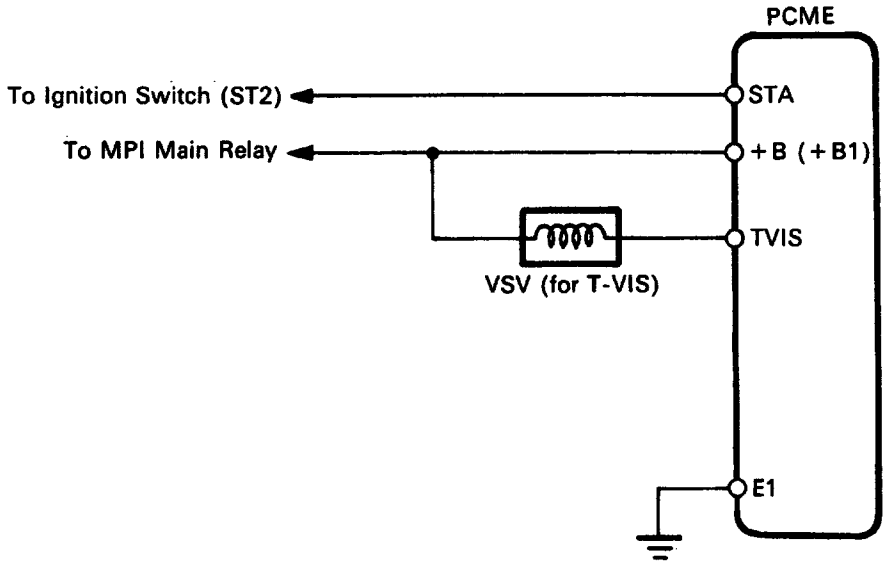

P04201
FI3041

Z02786

EGOYY–01

COMPONENTS FOR REMOVAL AND INSTALLATION

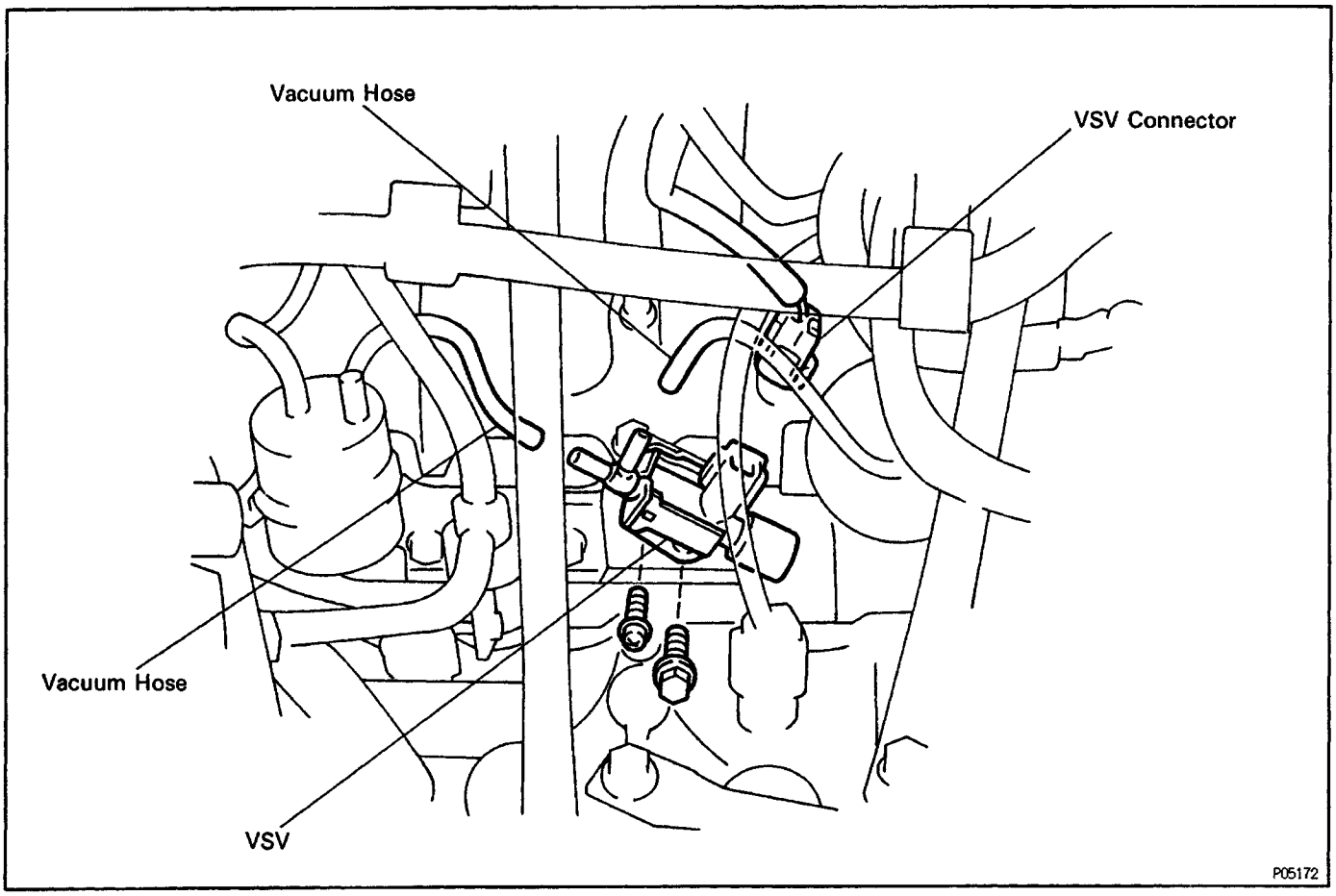

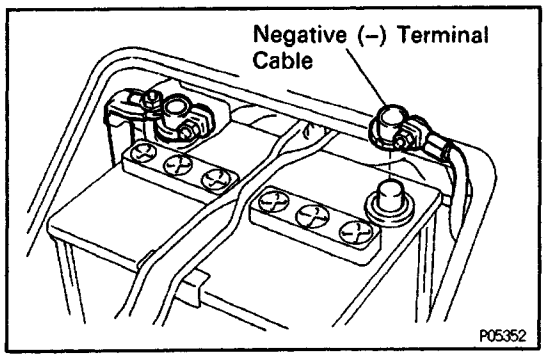

EGOYZ–01

VSV INSPECTION

(See Components for Removal and Installation)

1. DISCONNECT CABLE FROM NEGATIVE TERMINAL OF BATTERY

CAUTION: Turn the ignition switch to "LOCK". Disconnect the negative terminal from the battery. Wait at least 20 seconds before proceeding with work.

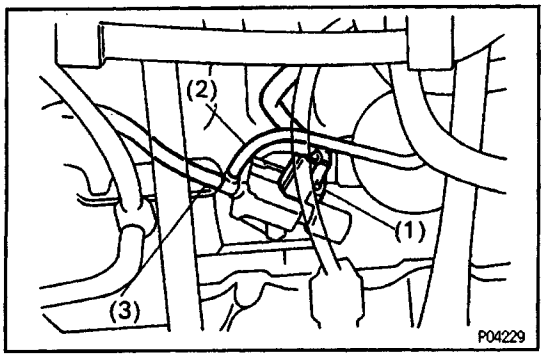

2. REMOVE VSV

(a) Disconnect the following connector and hoses:

(1) VSV connector

(2) Vacuum hose (from T–VIS valve) from port E of VSV

(3) Vacuum hose (from vacuum tank) from port F of VSV

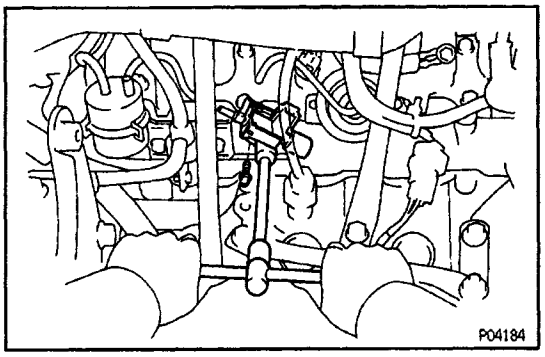

(b) Remove the screw, bolt and VSV.

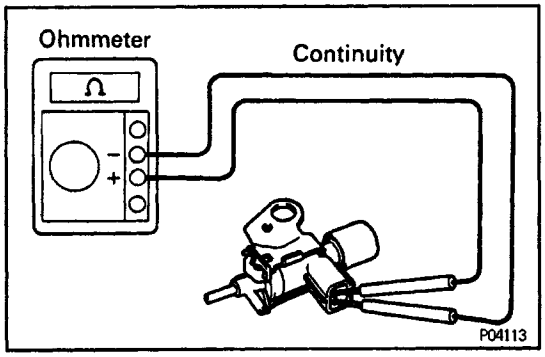

3. INSPECT VSV

A. Inspect VSV for open circuit

Using an ohmmeter, check that there is continuity between the terminals.

Resistance (Cold):

33–39Ω

If there is no continuity, replace the VSV.

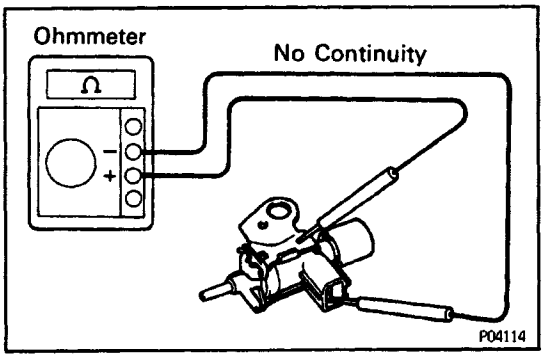

B. Inspect VSV for ground

Using an ohmmeter, check that there is no continuity between each terminal and the body.

If there is continuity, replace the VSV.

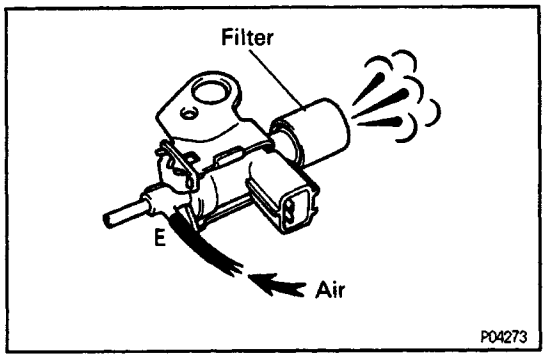

C. Inspect VSV operation

(a) Check that the air flows from port E to the filter.

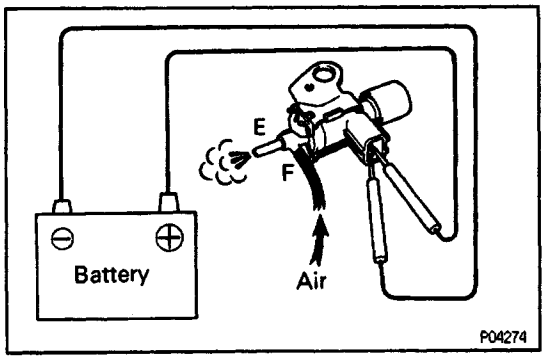

(b) Apply battery voltage across the terminals.

(c) Check that the air flows from port E to port F.

If operation is not as specified, replace the VSV.

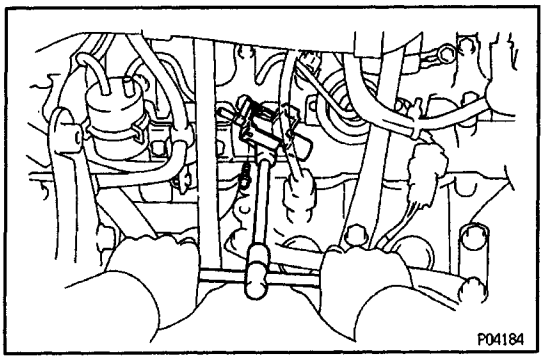

4. REINSTALL VSV

(a) Install the VSV with the bolt and screw.

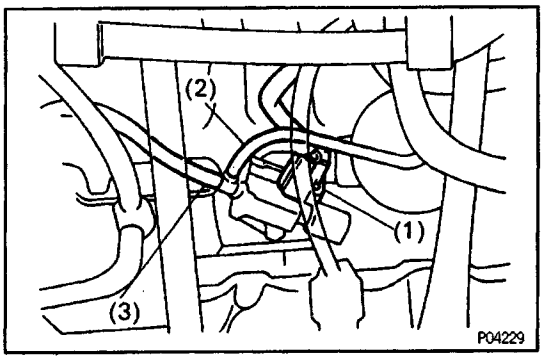

(b) Connect the following connector and hoses:
(1) VSV connector
(2) Vacuum hose (from T–VIS valve) to port E of VSV
(3) Vacuum hose (from vacuum tank) to port F of VSV

5. RECONNECT CABLE TO NEGATIVE TERMINAL OF BATTERY

CHARGE AIR COOLER (CAC)

EG0XS–01

COMPONENTS FOR REMOVAL AND INSTALLATION

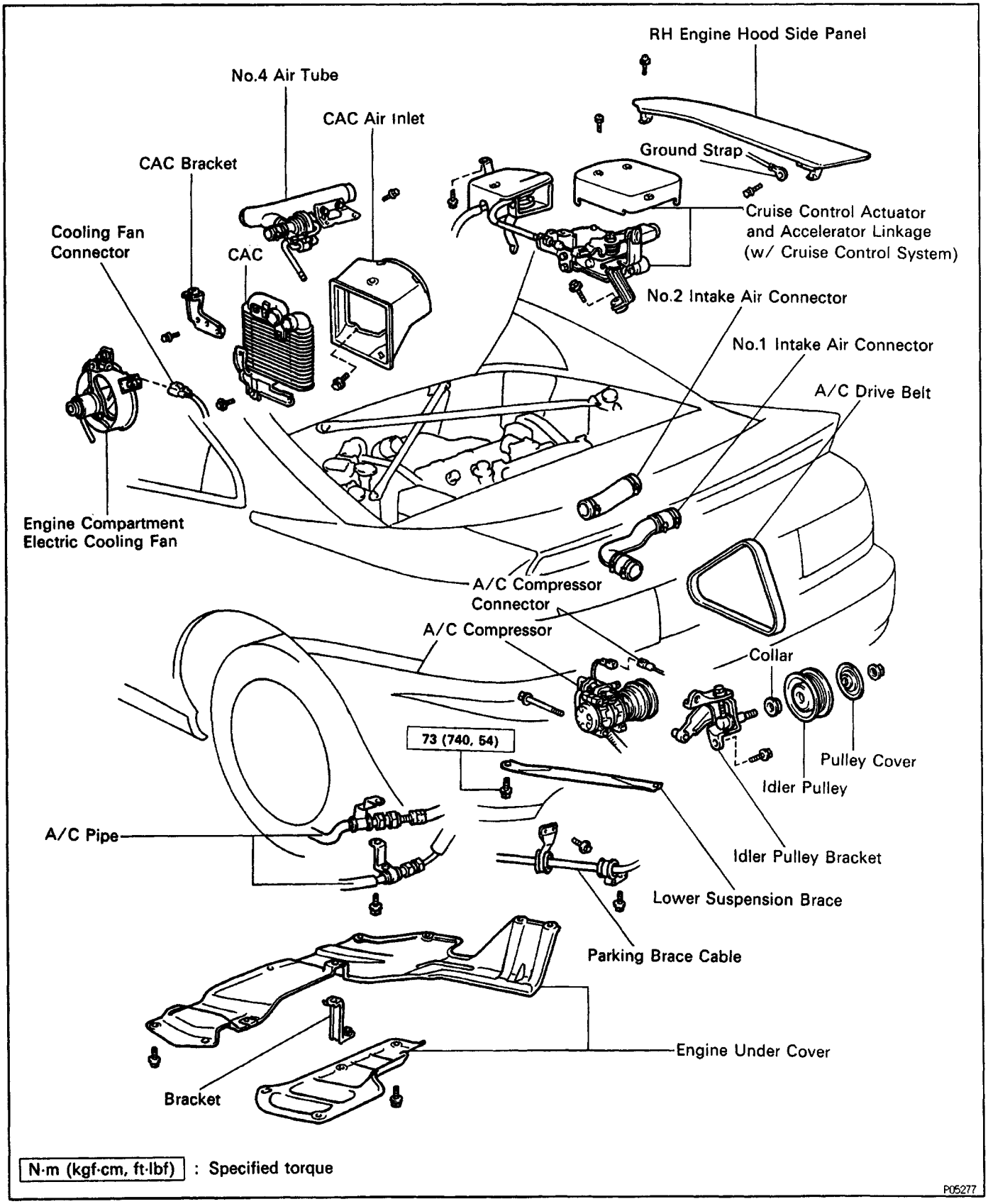

EGOX6–01

CRC REMOVAL

(See Components for Removal and Installation)

1. DISCONNECT CABLE FROM NEGATIVE TERMINAL OF BATTERY

CAUTION: Turn the ignition switch to "LOCK". Disconnect the negative terminal from the battery. Wait at least 20 seconds before proceeding with work.

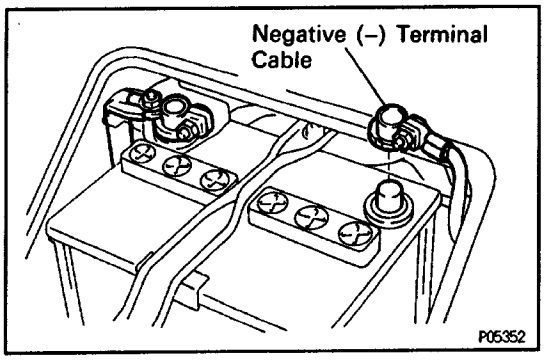

2. REMOVE ENGINE UNDER COVERS

3. REMOVE RH ENGINE HOOD SIDE PANEL

4. REMOVE NO.1 AND NO.2 INTAKE AIR CONNECTORS

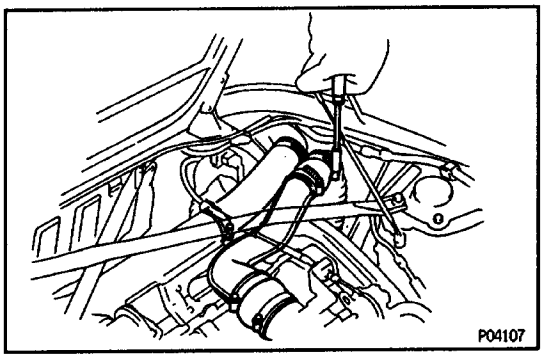

5. (w/ CRUISE CONTROL SYSTEM)
REMOVE CRUISE CONTROL ACCELERATOR LINKAGE

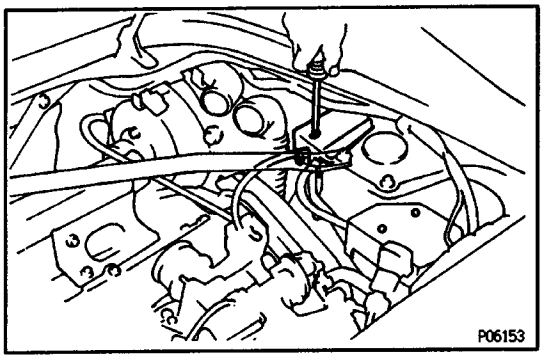

6. REMOVE ENGINE COMPARTMENT ELECTRIC COOLING FAN

(a) Disconnect the cooling fan connector.

(b) Loosen the three bolts, and remove the cooling fan.

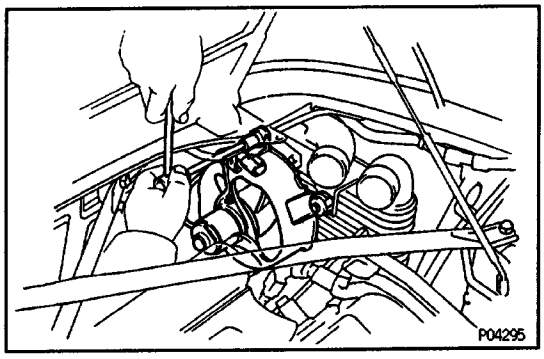

7. DISCONNECT A/C COMPRESSOR FROM ENGINE

(a) Remove the three clamp bolts, and disconnect the parking brake cable.

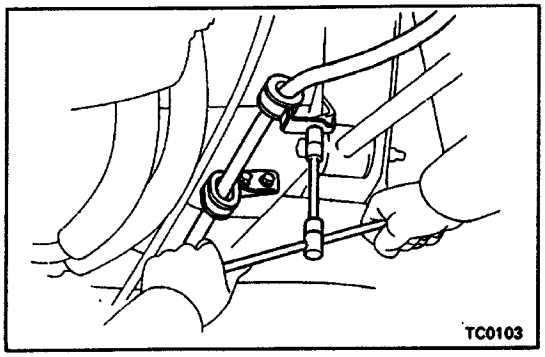

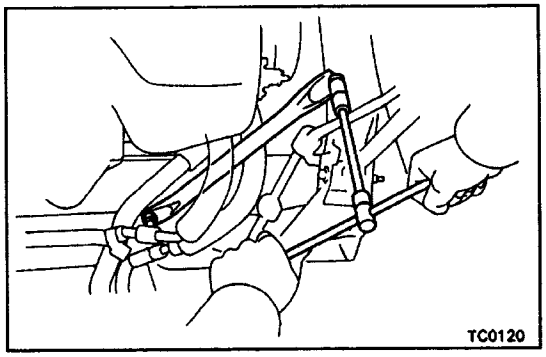

(b) Remove the two bolts and suspension brace.

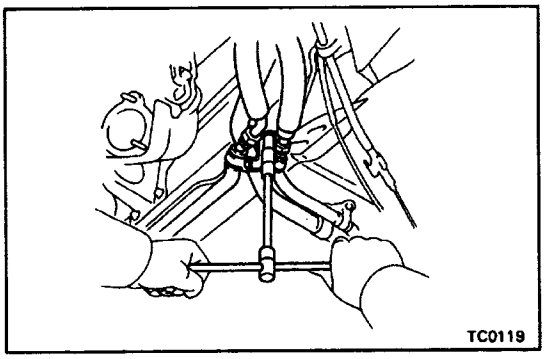

(c) Remove the clamp nut, and disconnect the two A/C pipes.

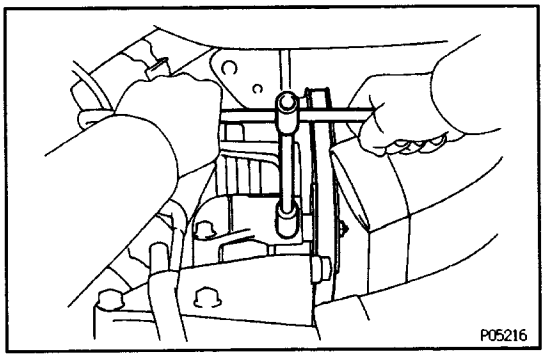

(d) Loosen the idler pulley nut.
(e) Loosen the adjusting bolt, and remove the drive belt.

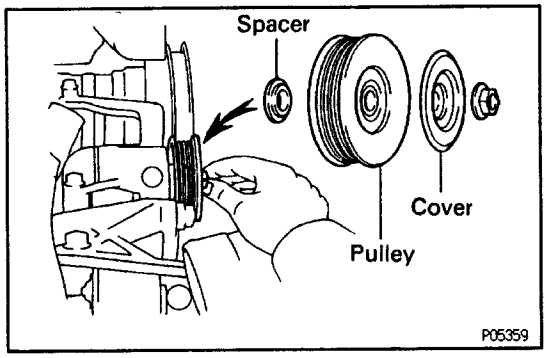

(f) Remove the nut, pulley cover, idler pulley and spacer.

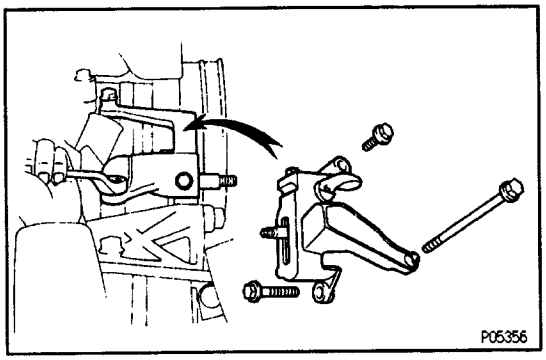

(g) Disconnect the A/C compressor connector.
(h) Remove the three bolts and idler pulley bracket.

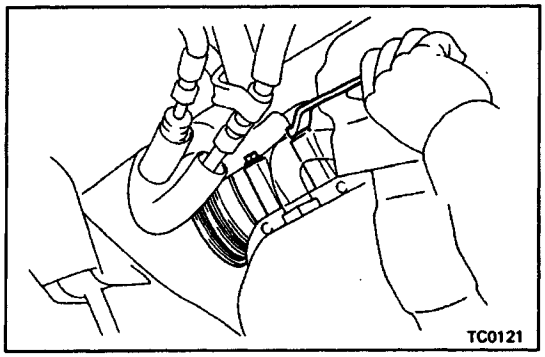

(i) Remove the two bolts, and disconnect the A/C compressor from the engine.

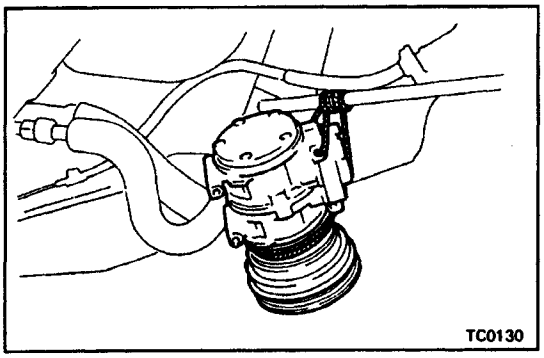

HINT: Suspend the A/C compressor to strut rod with a string.

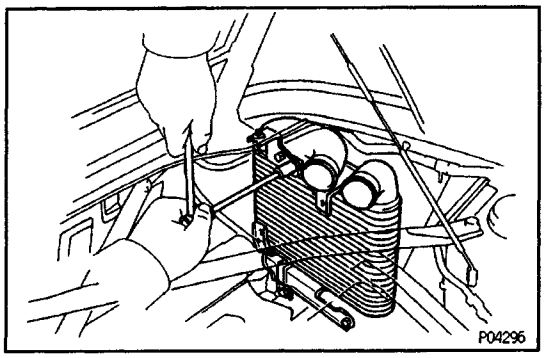

8. REMOVE CAC

(a) Remove the two bolts holding the CAC to the upper bracket.

(b) Remove the three bolts, upper bracket and CAC.

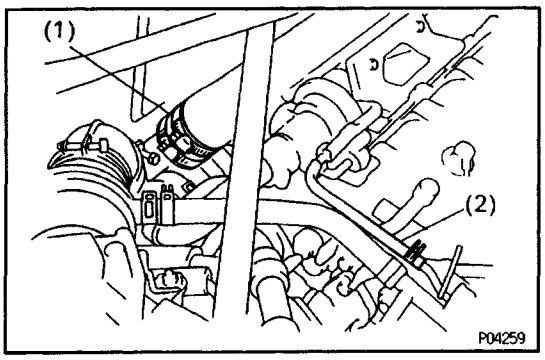

9. REMOVE NO.4 AIR TUBE

(a) Disconnect the following hoses:

(1) Air connector from No.4 air tube

(2) Air hose from No.2 air tube

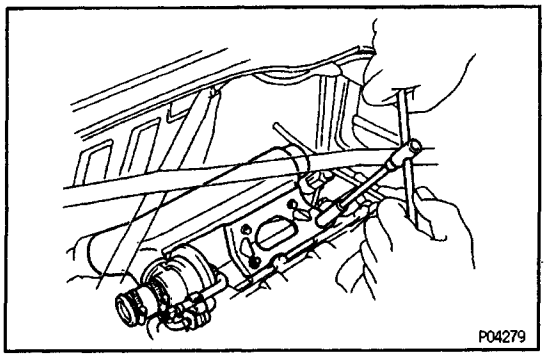

(b) Remove the two bolts and No.4 air tube.

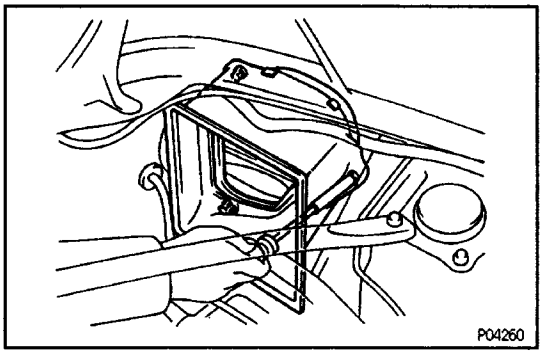

10. REMOVE COOL AIR INLET

Remove the three bolts and air inlet.

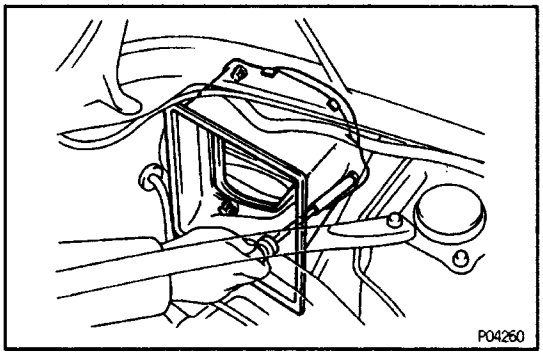

EG0X7–01

CAC INSTALLATION

(See Components for Removal and Installation)

1. INSTALL COOL AIR INLET

Install the air inlet with the three bolts.

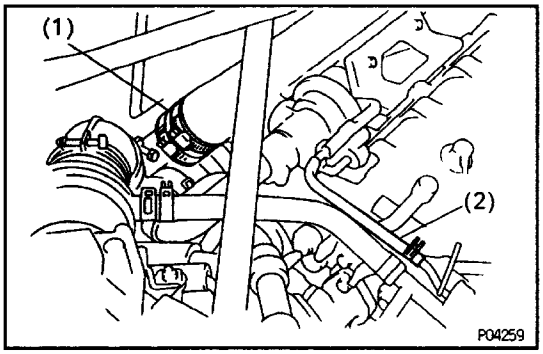

2. INSTALL NO.4 AIR TUBE

(a) Connect the following hoses:

(1) Air connector to No.4 air tube

(2) Air hose to No.2 air tube

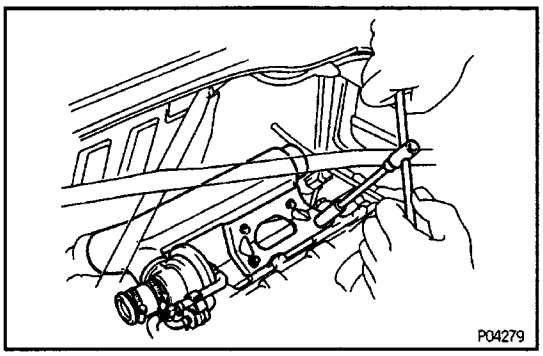

(b) Install the No.4 air tube with the two bolts.

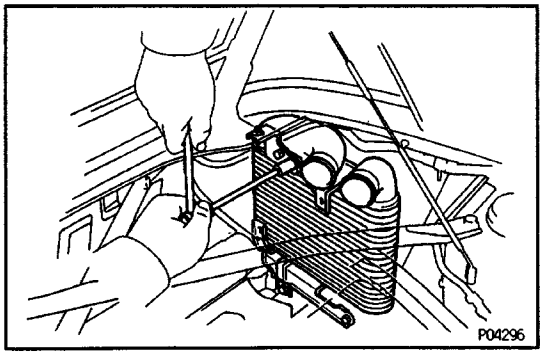

3. INSTALL CAC

Install the CAC and upper bracket with the five bolts.

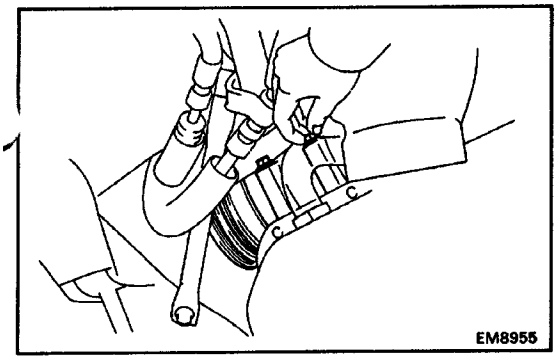

4. INSTALL A/C COMPRESSOR

(a) Temporarily install the A/C compressor with the with the two bolts.

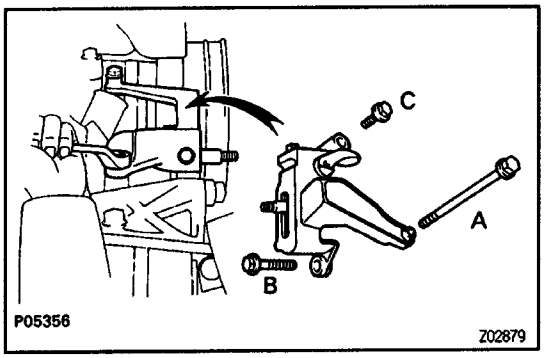

(b) Install the idler pulley bracket with the three bolts.

Torque:

25 N–m (250 kgf–cm, 18 ft–lbf) for A
27 N–m (275 kgf–cm, 20 ft–lbf) for B
37 N–m (375 kgf–cm, 27 ft–lbf) for C

(c) Connect the A/C compressor connector.

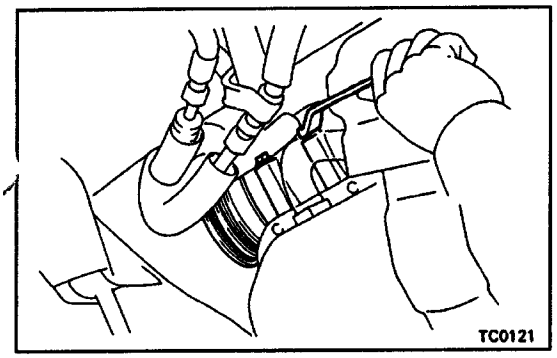

(d) Tighten the two bolts of the lower side of the A/C compressor.

Torque: 25 N–m (250 kgf–cm, 18 ft–lbf)

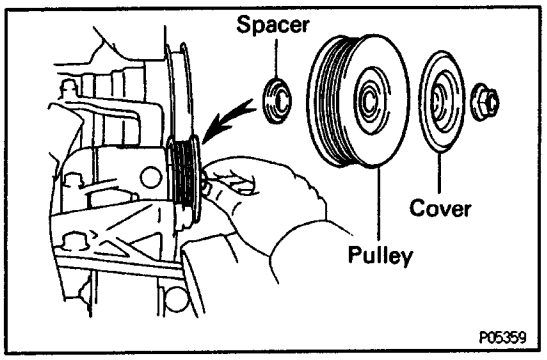

(e) Temporarily install the spacer, idler pulley and pulley cover with the nut.

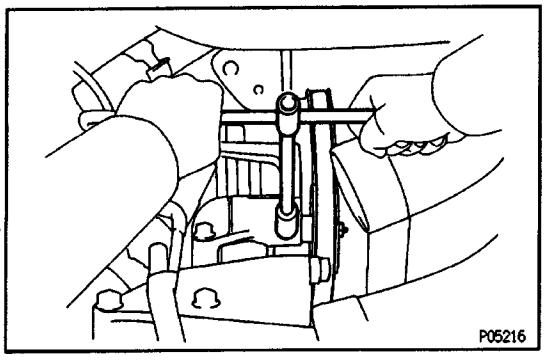

(f) Install the drive belt with the adjusting bolt.

(g) Tighten the idler pulley nut.

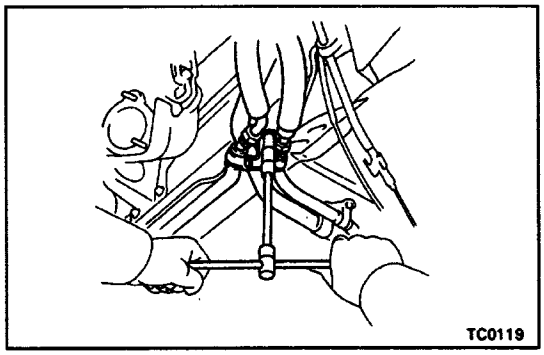

(h) Install the A/C pipes with the two clamps and nut.

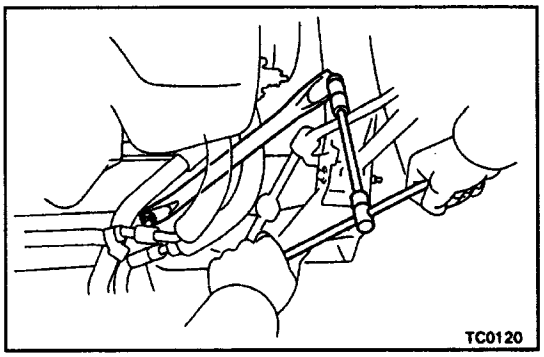

(i) Install the lower suspension brace with the two bolts.
Torque: 73 N–m (740 kgf–cm, 54 ft–lbf)

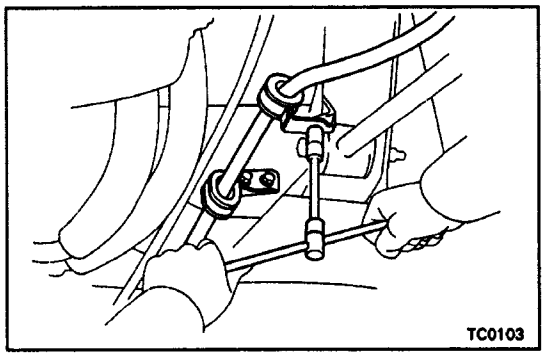

(j) Install the parking brake cable with the two clamp and three bolts.

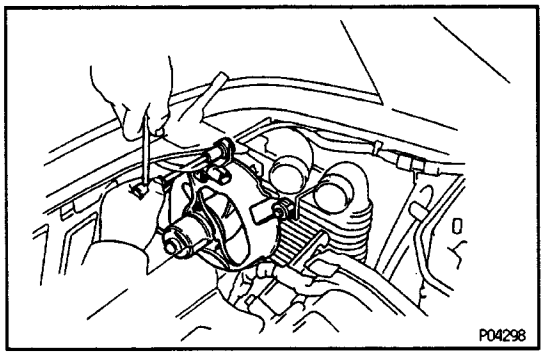

5. INSTALL ENGINE COMPARTMENT ELECTRIC COOLING FAN

(a) Install the cooling fan with the three bolts.
(b) Connect the cooling fan connector.

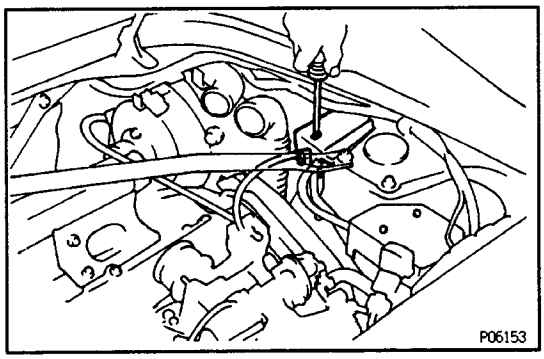

6. (w/ CRUISE CONTROL SYSTEM) INSTALL CRUISE CONTROL ACCELERATOR LINKAGE

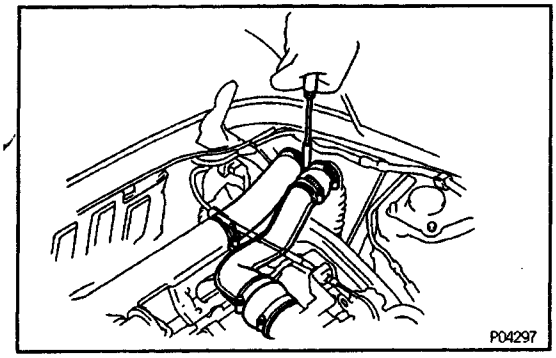

7. INSTALL NO.1 AND NO.2 INTAKE AIR CONNECTORS

8. INSTALL RH ENGINE HOOD SIDE PANEL

9. INSTALL ENGINE UNDER COVERS

10. CONNECT CABLE TO NEGATIVE TERMINAL OF BATTERY

TURBOCHARGER SYSTEM

DESCRIPTION

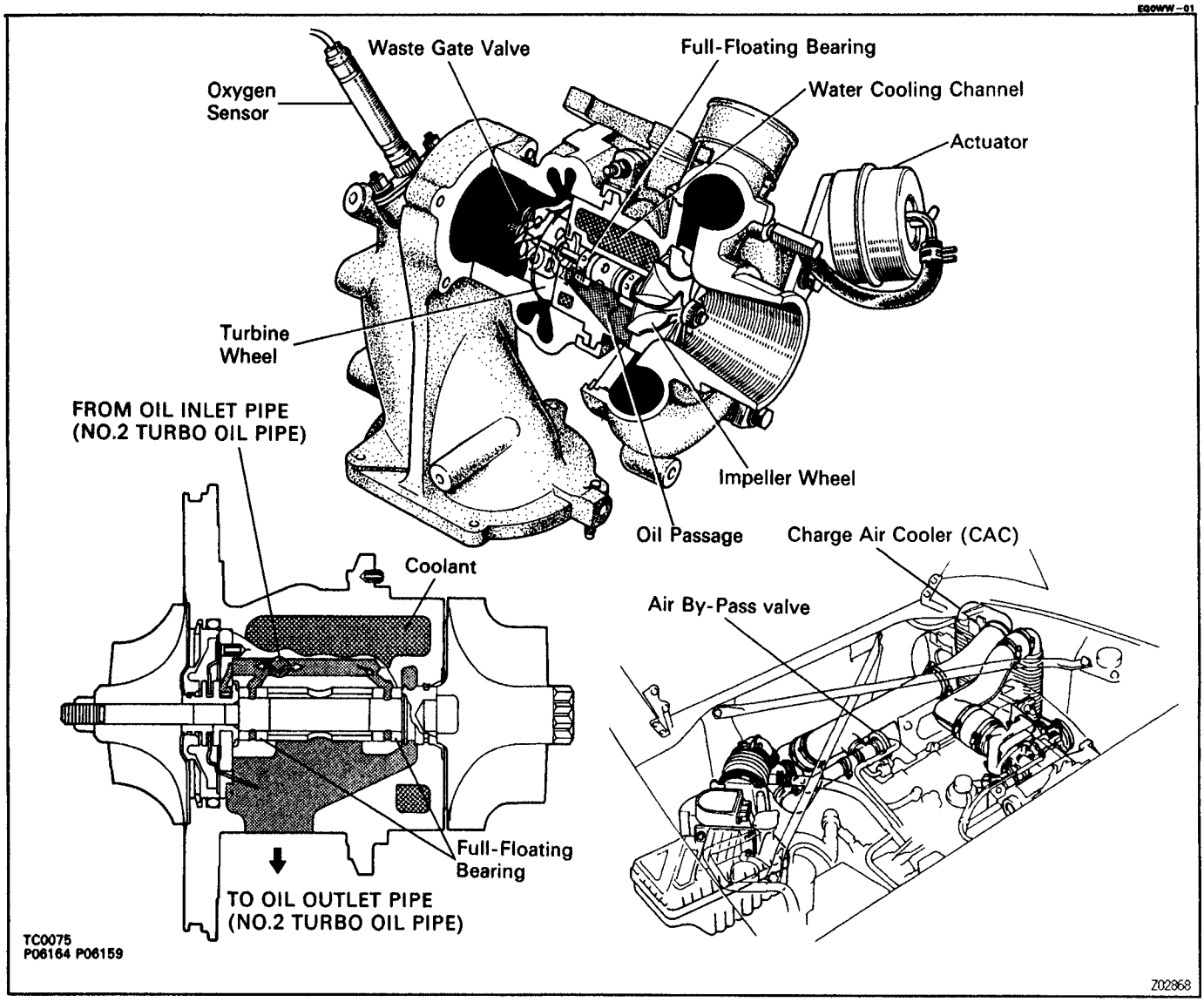

Systems which increase the amount of air sent to the engine are either turbocharger type (using exhaust gas to turn the turbine) or supercharger type (using the engine crankshaft, etc. to mechanically turn the pump, etc.). For MR2 3S–GTE engine, the turbocharger type been adopted.

The turbocharger is a device which increases engine output by sending a greater amount of air–fuel mixture to the engine than under normal conditions.

Engine output depends upon the volume of the air–fuel mixture ignited per unit of time.

Therefore, to increase engine output, the most effective method is to send a greater amount of air–fuel mixture into the cylinder.

In other words, by installing a special turbocharger and providing a higher air–fuel mixture than usual, engine output can be increased by increasing the average combustion pressure without increasing the engine speed.

OPERATION

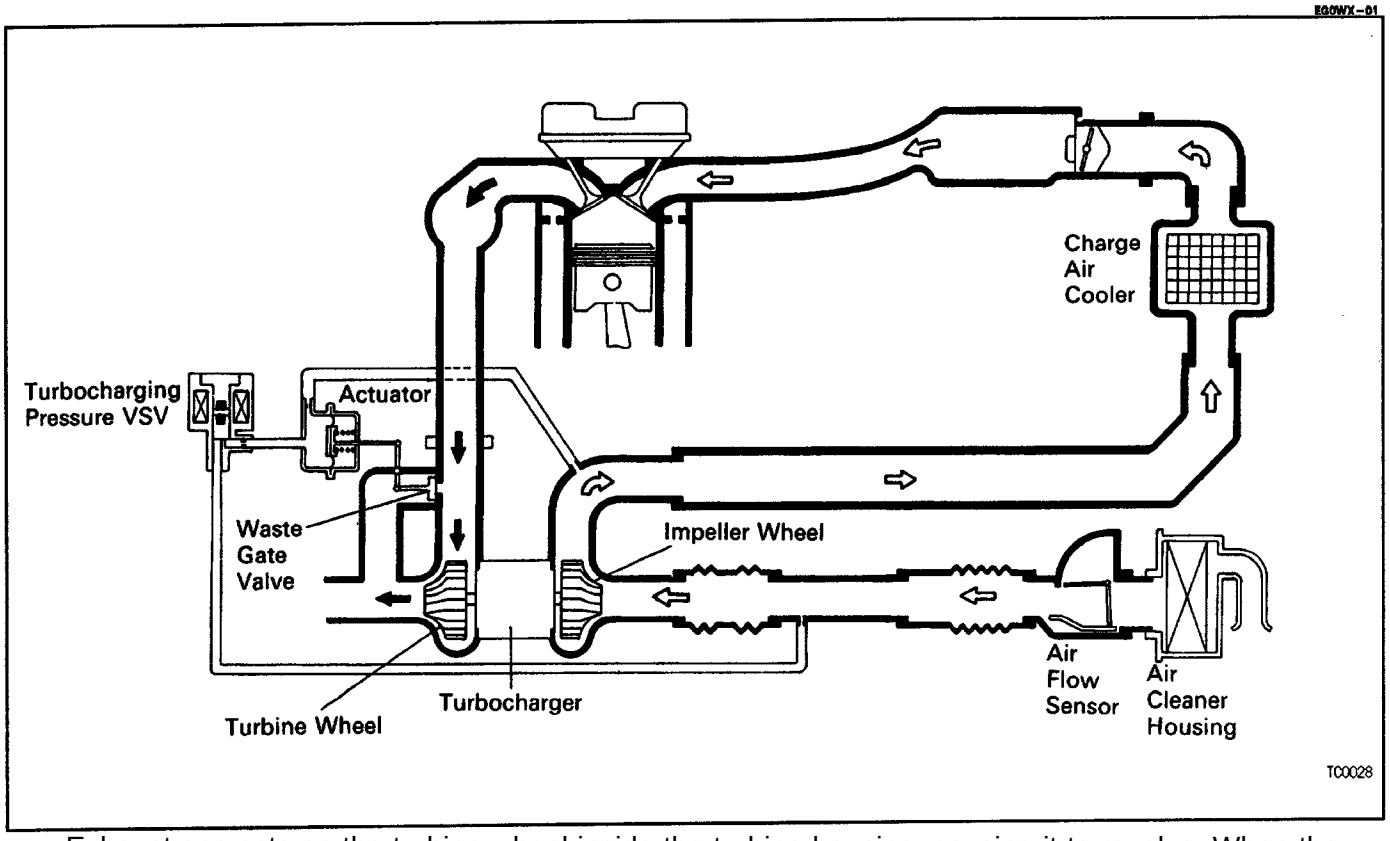

Exhaust gas acts on the turbine wheel inside the turbine housing, causing it to revolve. When the turbine wheel revolves, the impeller which is located on the same shaft also revolves, compr– essing the intake air which has passed through the air flow sensor from the air cleaner housing. When expelled from the compressor housing the compressed air is suppressed air is supplied to the cylinders. When the engine speed increases, the exhaust gas volume increases and the turbine wheel revolutions increase (approx. 20,000–110,000 rpm), thus the turbocharged air pressure grows greater and engine output increases.

Waste Gate Valve

Although on the one hand high output is achieved by turbocharging, if the turbocharged air pressure becomes too high, knocking occurs and, on the contrary, a reduction in engine output is caused. If the turbocharged air pressure exceeds the prescribed air pressure, the flow of exhaust gas by– passes the turbine, controlling turbine wheel revolutions and turbocharged air pressure. This by–pass valve which controls the quantity of exhaust gas flowing to the turbine is called the waste gate valve. When the turbocharged air pressure exceeds the prescribed pressure, the actuator operates, the waste gate valve opens and part of the exhaust gas by–passes the turbine. This causes a drop in the turbine revolution rate and controls the turbocharged air within the prescribed limits.

Charge Air Cooler (CAC)

The CAC cools the turbocharged air (intake air) put out by the turbocharger, thereby increasing the air density. As the intake air temperature decreases, the gas temperature in the combustion chamber falls and the occurrence of knocking is suppressed, giving an increase in engine output. The MR2 CAC is an air cooling type located at the top of the engine, utilizing the vehicle windstream the cool the turbocharged air.

PRECAUTION

1. Do not stop the engine immediately after pulling a trailer or after high speed or uphill driving. Idle the engine for 20 – 120 seconds, depending on how hard the vehicle has been driven.
2. Avoid sudden acceleration or racing immediately after starting a cold engine.
3. Do not run the engine with air cleaner, removed, as this may cause foreign material to enter and damage the impeller wheel operating at high speed.
4. If a turbocharger is found to be defective and must be replaced, check for the cause, and repair or replace the following items as necessary:
   - Engine oil level and quality
   - Conditions under which the turbocharger was used
   - Oil lines leading to the turbocharger

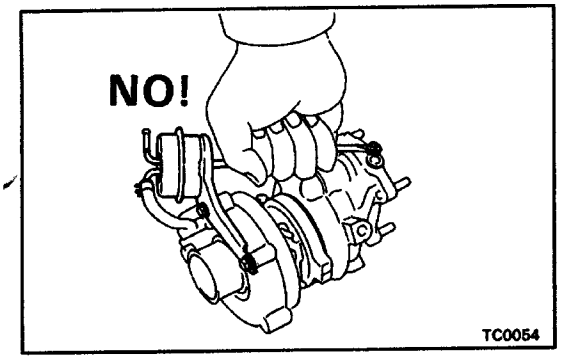

5. Use caution when removing and reinstalling the turbocharger assembly. Do not drop it or bang it against anything or grasp it by easily–deformed parts, such as the actuator or rod, when moving it.
6. Before removing the turbocharger, plug the intake and exhaust ports and oil inlet to prevent entry of dirt or other foreign material.

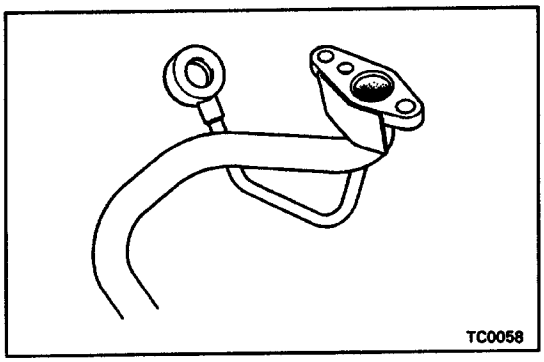

7. If replacing the turbocharger, check for accumulation of sludge particles in the oil pipes, and if necessary, replace the oil pipes.
8. Completely remove the gasket adhered to the lubrication oil pipe flange and turbocharger oil flange.
9. When replacing bolt or nuts, use only authorized replacement parts to prevent breakage or deformation.

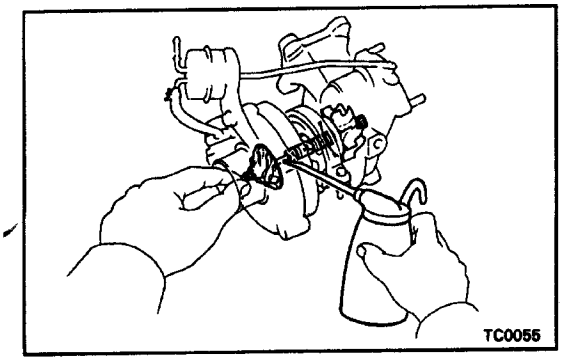

10. If replacing the turbocharger, put 20 cm^3 (1.2 cu in.) of oil into the turbocharger oil inlet and turn the impeller wheel by hand to spread oil to the bearing.
11. If overhauling or replacing the engine, cut the fuel supply after reassembly and crank the engine for 30 seconds to distribute oil throughout the engine. Then allow the engine to idle for 60 seconds.

PREPARATION

SST (SPECIAL SERVICE TOOLS)

IG00R–03

	09992–00241 Turbocharger Pressure Gauge	

EQUIPMENT

IG00T–03

Dial indicator	Inpeller wheel
Torque wrench	

SERVICE SPECIFICATIONS
SERVICE DATA

EG0X8–01

Turbocharger	Turbocharging pressure	49 – 81 kPa (0.50 – 0.83 kgf/cm^2, 7.1 –11.8 psi)
	Impeller wheel axial play	0.13 mm (0.0051 in.) or less
	Impeller wheel radial play	0.18 mm (0.0071 in.) or less

TORQUE SPECIFICATIONS

EG0X9–01

Part tightened	N–m	kgf–cm	ft–lbf
Turbine outlet elbow x Turbocharger	64	650	47
Side bearing housing plate x Turbocharger	11	120	9
Turbo water pipe x Turbocharger	11	120	9
Turbocharger x Exhaust manifold	64	650	47
Oil pipe x Turbocharger	17	175	13
Oil pipe x Cylinder block (Bolt)	43	440	32
Oil pipe x Cylinder block (Union bolt)	51	525	38
Turbocharger stay x Turbocharger	69	705	51
Turbocharger stay x Cylinder block	59	600	43
Oxygen sensor x Turbine outlet elbow	44	450	33
No.4 air tube stay x Cylinder head	19	195	14
No.4 air tube stay x No.4 air tube	19	195	14
Air by–pass valve x No.4 air tube	19	195	14
Main TWC x Turbine outlet elbow	29	300	22
TWC stay x Main TWC	59	600	43
TWC stay x Cylinder block	59	600	43
Clutch release cylinder x Transaxle	12	120	9
Front engine mounting bracket x Transaxle	77	790	57
Front engine mounting insulator x Body	77	790	57
Front engine mounting insulator x Bracket	96	980	71
Front exhaust pipe x Main TWC	62	630	46
Front exhaust pipe support bracket x Suspension crossmember	21	210	15
Suspension member damper x Suspension crossmember	21	210	15
Tailpipe x Body bracket	66	670	48
Tailpipe x Front exhaust pipe	43	440	32
Tailpipe bracket x Front exhaust pipe bracket	19	190	14
A/C idler pulley bracket x Cylinder block (12 mm head)	25	250	18
A/C idler pulley bracket x Cylinder block (14 mm head)	27	275	20
A/C idler pulley bracket x RH engine hanger	37	375	27
A/C compressor x Cylinder block	25	250	18
Lower suspension brace x Body	73	740	54

TROUBLESHOOTING

HINT: Before troubleshooting the turbocharger, first check the engine itself. (Valve clearance, engine compression, ignition timing etc.)

INSUFFICIENT ACCELERATION, LACK OF POWER OR EXCESSIVE FUEL CONSUMPTION

(Possible Cause)	(Check Procedure and Correction Method)
1. TURBOCHARGING PRESSURE TOO LOW	Check turbocharging pressure. (See page EG1–202) **Turbocharging pressure:** **49 – 81 kPa** **(0.50 – 0.83 kgf/cm^2, 7.1 – 11.8 psi)** If the pressure is below specifications, begin diagnosis from item 2.
2. RESTRICTED INTAKE SYSTEM	Check intake air system, and repair or replace parts as necessary. (See page EG1–202)
3. LEAK IN INTAKE AIR SYSTEM	Check intake air system, and repair or replace parts as necessary. (See page EG1–202)
4. RESTRICTED EXHAUST SYSTEM	Check exhaust system, and repair or replace parts as necessary. (See page EG1–202)
5. LEAK IN EXHAUST SYSTEM	Check exhaust system, and repair or replace parts as necessary. (See page EG1–202)
6. ERRATIC TURBOCHARGER OPERATION	Check rotation of impeller wheel. If it does not turn or turns with a heavy drag, replace the turbocharger assembly. Check axial and radial plays of impeller wheel. (See page EG1–215) **Axial play: 0.13 mm (0.0051 in.) or less** **Radial play: 0.18 mm (0.0071 in.) or less** If not within specification, replace the turbocharger assembly.

V00992

ABNORMAL NOISE

(Possible Cause)	(Check Procedure and Correction Method)
1. TURBOCHARGING HEAT INSULATOR RESONANCE	Check for loose, improperly installed or deformed insulator mount bolts, and repair or replace as necessary.
2. EXHAUST PIPE LEAKING OR VIBRATING	Check for deformed exhaust pipe, loose mount bolts or damaged gasket, and repair or replace as necessary.
3. ERRATIC TURBOCHARGER OPERATION	Refer to Item 6 of INSUFFICIENT ACCELERATION, LACK OF POWER OR EXCESSIVE FUEL CONSUMPTION.

EXCESSIVE OIL CONSUMPTION OR WHITE EXHAUST

(Possible Cause)	(Check Procedure and Correction Method)
FAULTY TURBOCHARGER SEAL	Check for oil leakage in exhaust system. • Remove the turbine elbow from the turbocharger and check for excessive carbon deposits on the turbine wheel. Excessive carbon deposits indicate a faulty turbocharger. Check for oil leakage in intake air system. • Check for axial and radial plays in impeller wheel, and replace the turbocharger if necessary. (See page EG1–215) **Axial play: 0.13 mm (0.0051 in.) or less** **Radial play: 0.18 mm (0.0071 in.) or less** **NOTICE: Some oil mist in the blowby from the PCV is normal.** **Do not mistake it for an oil leak from the turbocharger.**

V00993

TURBOCHARGER

EG0X0–01

ON–VEHICLE INSPECTION

1. INSPECT INTAKE AIR SYSTEM

Check for leakage or clogging between the air cleaner housing and turbocharger inlet and between the tur–bocharger outlet and cylinder head.

- Clogged air cleaner .... Clean or replace element
- Hoses collapsed or deformed .... Repair or replace
- Leakage from connections .... Check each con–nection and repair
- Cracks in components .... Check and replace

2. INSPECT EXHAUST SYSTEM

Check for leakage or clogging between the cylinder head and turbocharger inlet and between the turbo–charger outlet and exhaust pipe.

- Deformed components .... Repair or replace
- Foreign material in passages .... Remove
- Leakage from components .... Repair or replace
- Cracks in components .... Check and replace

3. INSPECT ACTUATOR OPERATION

(a) Disconnect the actuator hose.

(b) Using SST, a turbocharger pressure gauge, apply approx. 65 kPa (0.66 kgf/cm^2, 9.4 psi) of pressure to the actuator and check that the rod moves.

If the rod does not move, replace the turbocharger assembly.

SST 09992 – 00241

NOTICE: Never apply more than 81 kPa (0.83 kgf/cm^2, 11.8 psi) of pressure to the actuator.

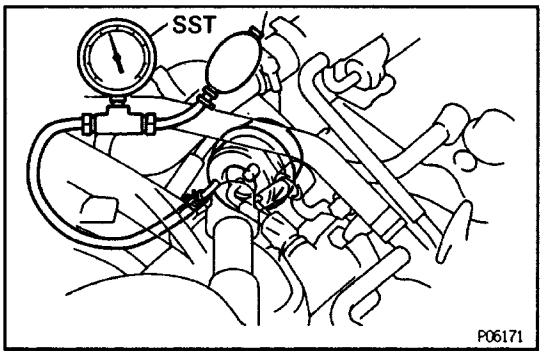

4. CHECK TURBOCHARGING PRESSURE

(a) Using a 3–way connector, connect SST, a turboch–arger pressure gauge, to the hose between the intake manifold and manifold absolute pressure sensor.

SST 09992 – 00241

(b) While driving with the engine running at 2,800 rpm or more with the throttle valve fully open in the 3rd gear, check the turbocharging pressure.

Standard pressure:

49 – 81 kPa (0.50 – 0.83 kgf/cm', 7.1 – 11.8 psi)

If the pressure is less than that specified, check the intake air and exhaust systems for leakage. If there is no leakage, replace the turbocharger assembly.

If the pressure is above specification, check if the actuator hose is disconnected or cracked. If not, re–place the turbocharger assembly.

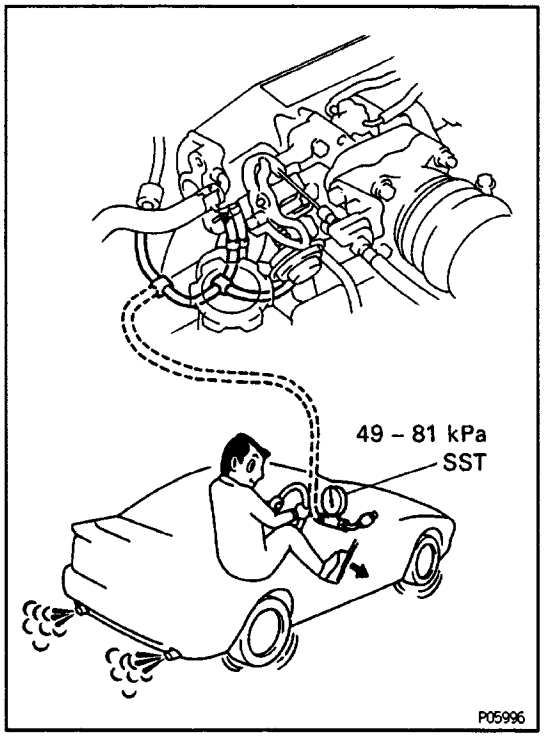

5. INSPECT IMPELLER WHEEL ROTATION
(See step 1 in Turbocharger Inspection)
6. INSPECT VSV FOR TURBOCHARGING PRESSURE
(See VSV Inspection under SMPI System)
7. INSPECT MAP
(See MAP Inspection under SMPI System)

COMPONENTS FOR REMOVAL AND INSTALLATION

EG0X1–01

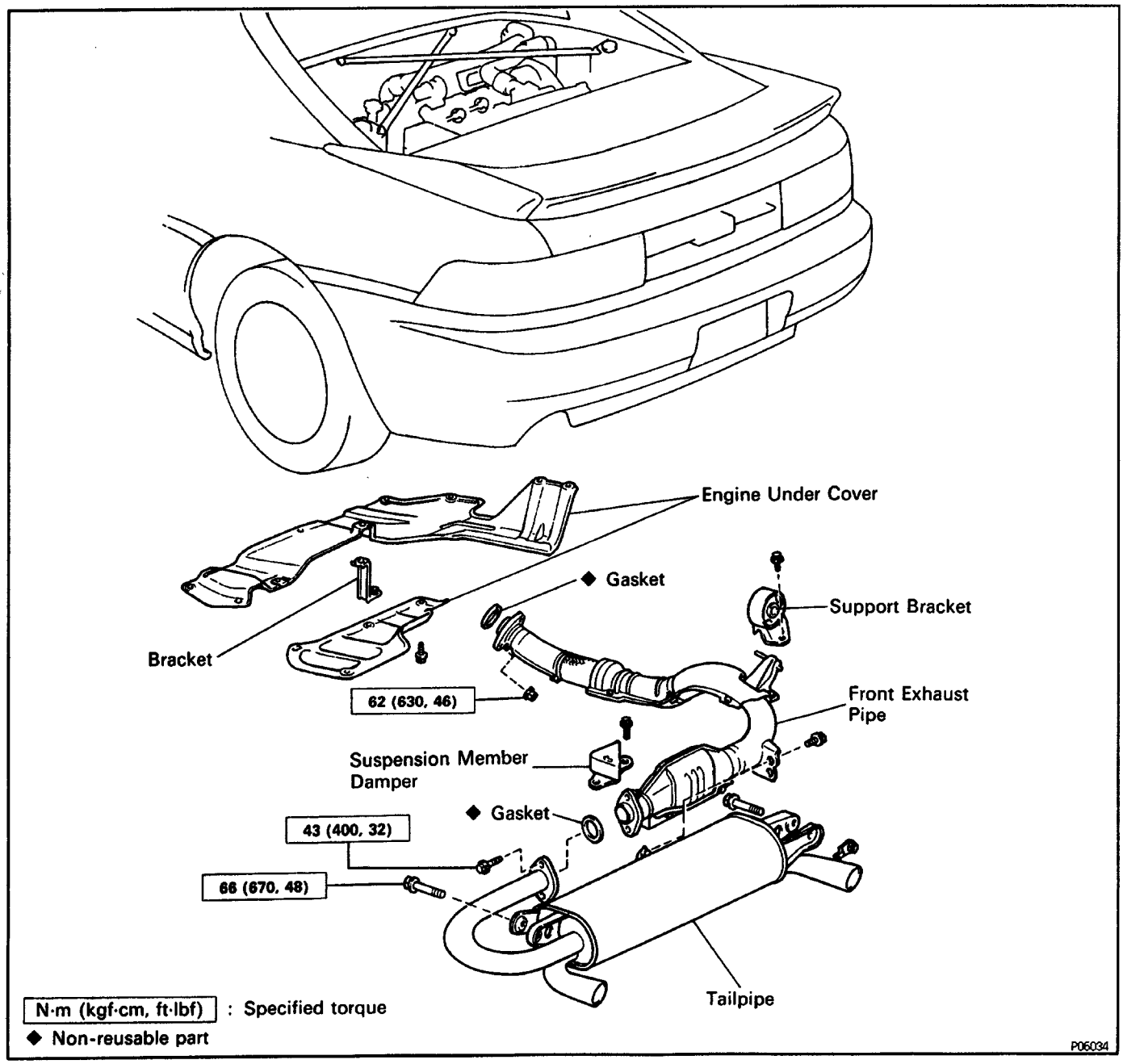

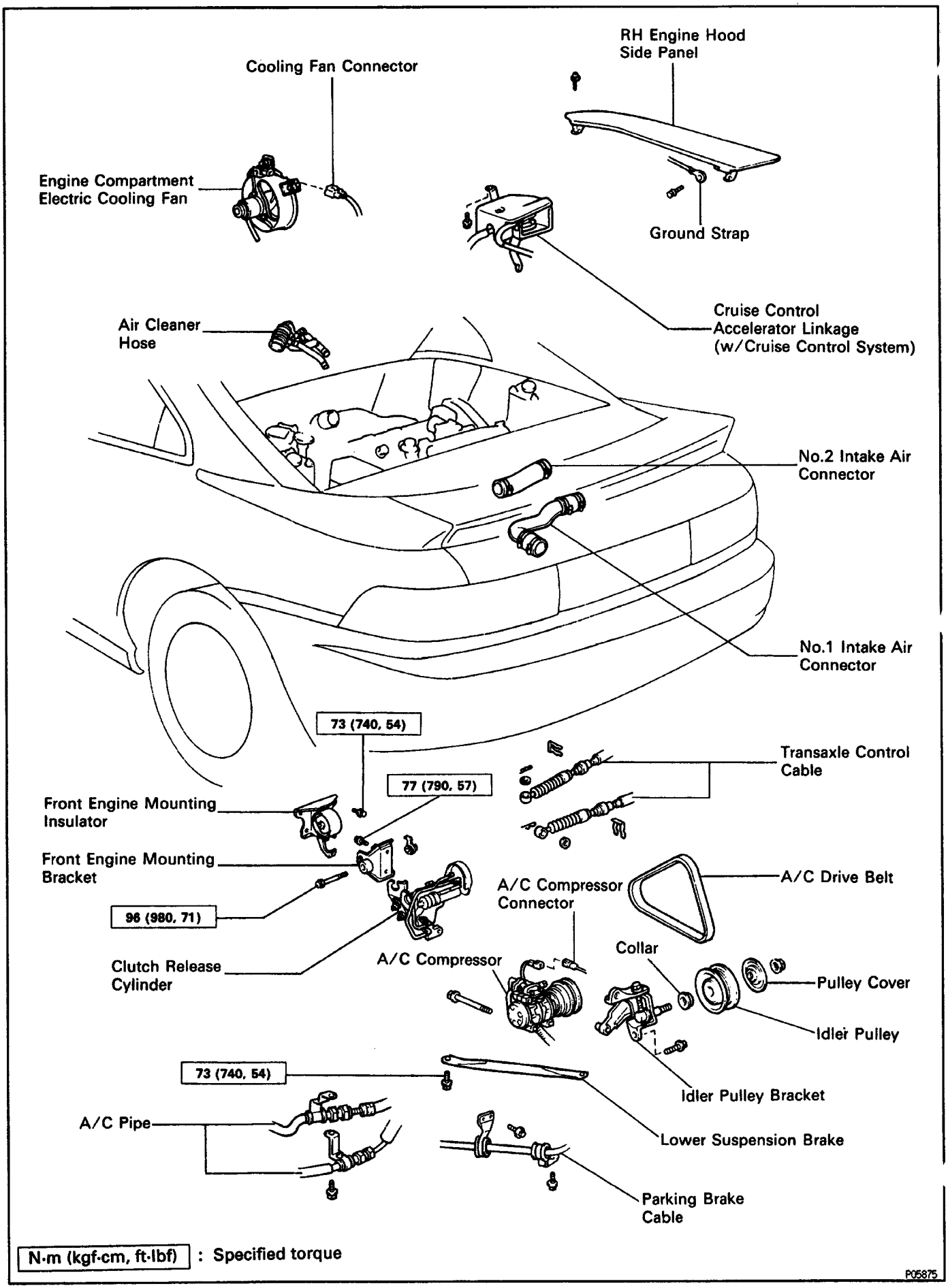
RH Engine Hood Side Panel
Cooling Fan Connector
Engine Compartment Electric Cooling Fan
Ground Strap
Cruise Control Accelerator Linkage (w/Cruise Control System)
Air Cleaner Hose
No.2 Intake Air Connector
No.1 Intake Air Connector
73 (740, 54)
77 (790, 57)
Transaxle Control Cable
Front Engine Mounting Insulator
Front Engine Mounting Bracket
96 (980, 71)
A/C Compressor Connector
A/C Drive Belt
Clutch Release Cylinder
A/C Compressor
Collar
Pulley Cover
Idler Pulley
73 (740, 54)
Idler Pulley Bracket
A/C Pipe
Lower Suspension Brake
Parking Brake Cable
N·m (kgf·cm, ft·lbf) : Specified torque
P05875

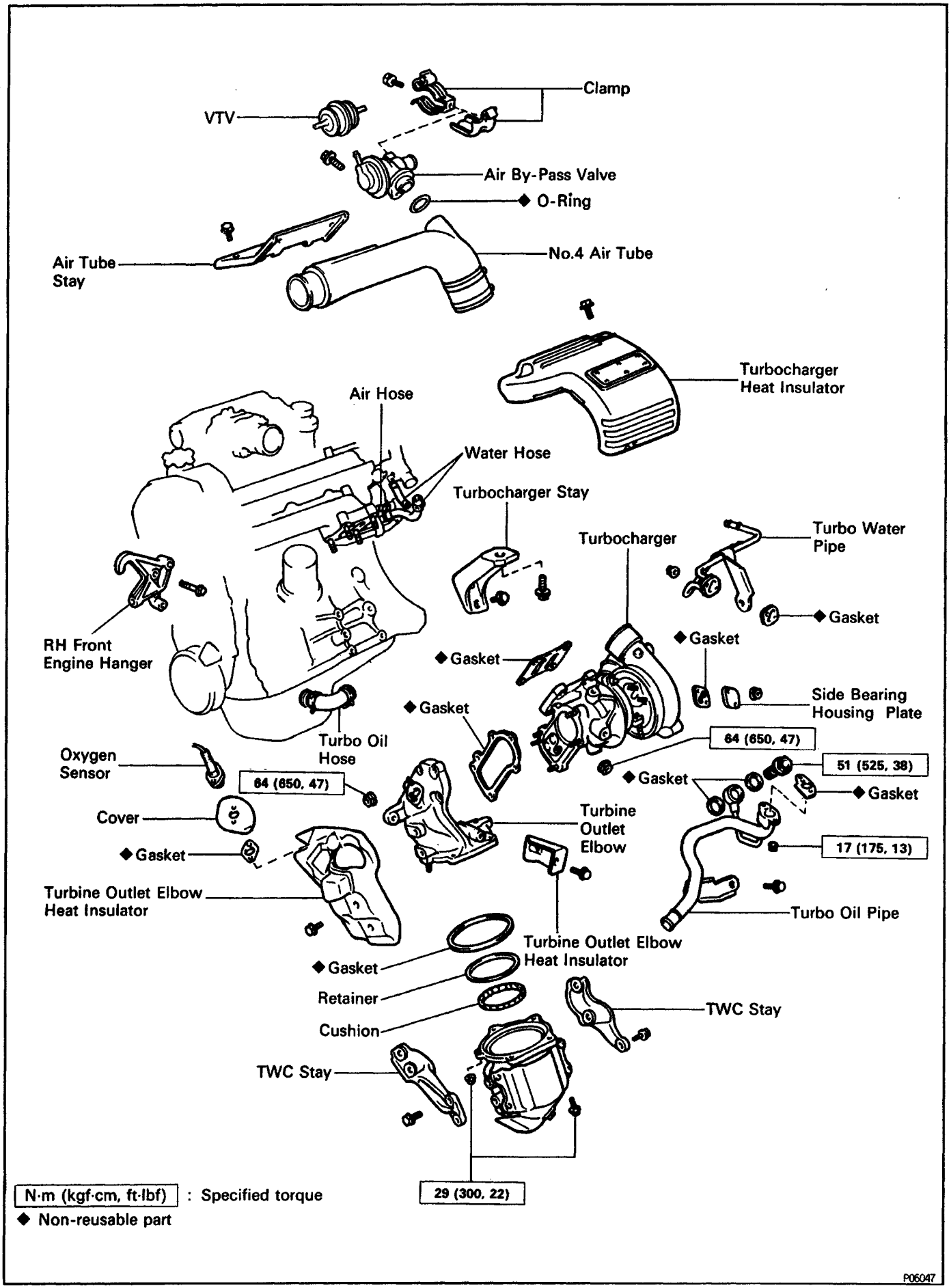
Clamp
VTV
Air By-Pass Valve
◆ O-Ring
Air Tube Stay
No.4 Air Tube
Turbocharger Heat Insulator
Air Hose
Water Hose
Turbocharger Stay
Turbocharger
Turbo Water Pipe
◆ Gasket
RH Front Engine Hanger
◆ Gasket
◆ Gasket
Side Bearing Housing Plate
◆ Gasket
Turbo Oil Hose
64 (650, 47)
Oxygen Sensor
64 (650, 47)
51 (525, 38)
◆ Gasket
◆ Gasket
Cover
Turbine Outlet Elbow
◆ Gasket
17 (175, 13)
Turbine Outlet Elbow Heat Insulator
Turbo Oil Pipe
Turbine Outlet Elbow Heat Insulator
◆ Gasket
Retainer
Cushion
TWC Stay
TWC Stay
29 (300, 22)
N·m (kgf·cm, ft·lbf) : Specified torque
◆ Non-reusable part
P06047

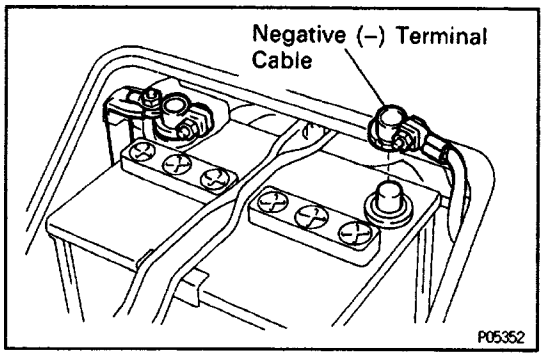

EG0X2–01

TURBOCHARGER REMOVAL

(See Components for Removal and Installation)

1. DISCONNECT CABLE FROM NEGATIVE TERMINAL OF BATTERY

CAUTION: Turn the ignition switch to ”LOCK”. Disconnect the negative terminal from the battery. Wait at least 20 seconds before proceeding with work.

2. DRAIN ENGINE OIL

3. REMOVE ENGINE UNDER COVERS

4. REMOVE RH ENGINE HOOD SIDE PANEL

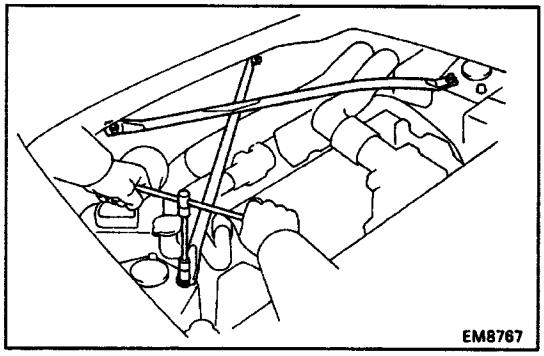

5. REMOVE UPPER SUSPENSION BRACE

Remove the two bolts, two nuts and upper brace.

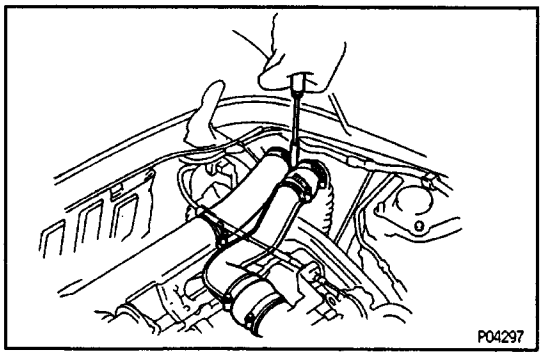

6. REMOVE NO.1 AND NO.2 INTAKE AIR CONNECTORS

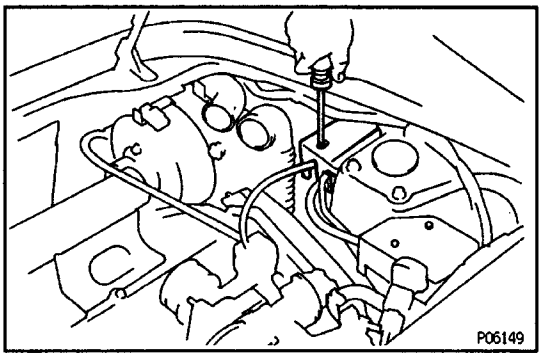

7. (w/ CRUISE CONTROL SYSTEM)
REMOVE CRUISE CONTROL ACCELERATOR LINKAGE

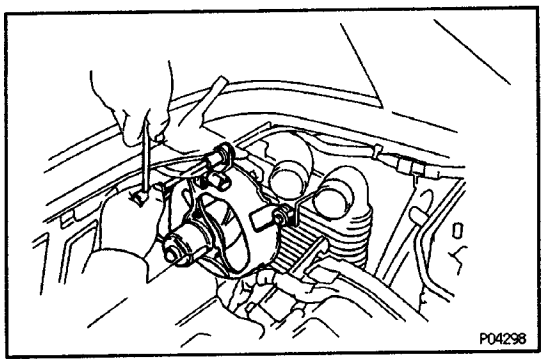

8. REMOVE ENGINE COMPARTMENT ELECTRIC COOLING FAN

(a) Disconnect the cooling fan connector.

(b) Loosen the three bolts, and remove the cooling fan.

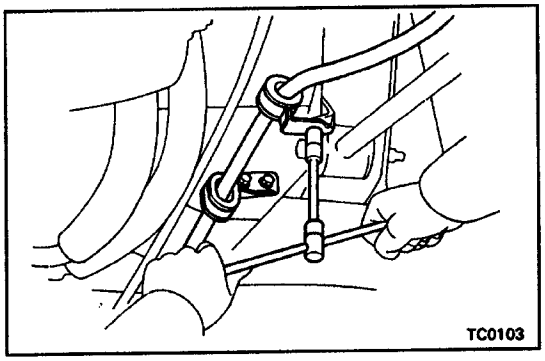

9. DISCONNECT A/C COMPRESSOR FROM ENGINE

(a) Remove the three clamp bolts, and disconnect the parking brake cable.

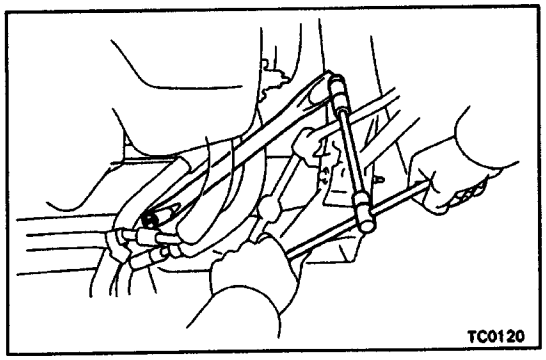

(b) Remove the two bolts and lower suspension brace.

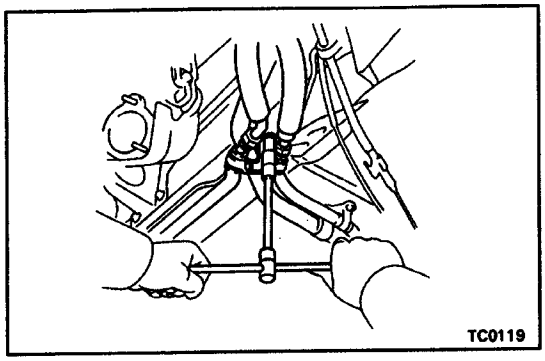

(c) Remove the clamp nut, and disconnect the two A/C pipes.

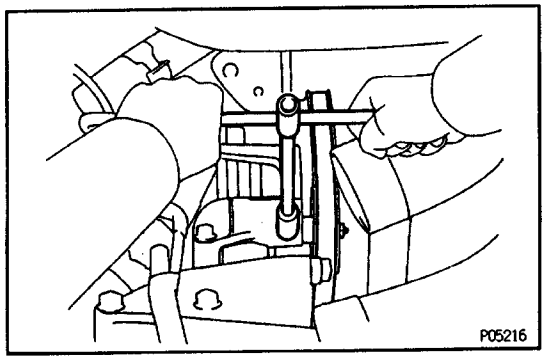

(d) Loosen the idler pulley nut.

(e) Loosen the adjusting bolt, and remove the drive belt.

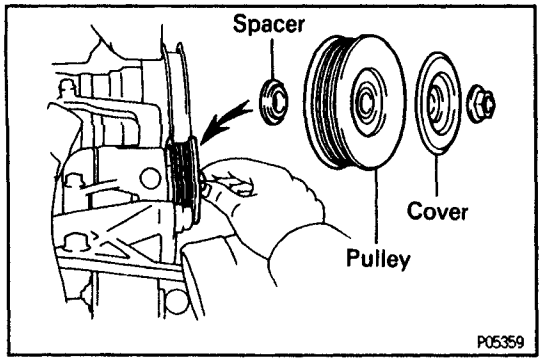

(f) Remove the nut, pulley cover, idler pulley and spacer.

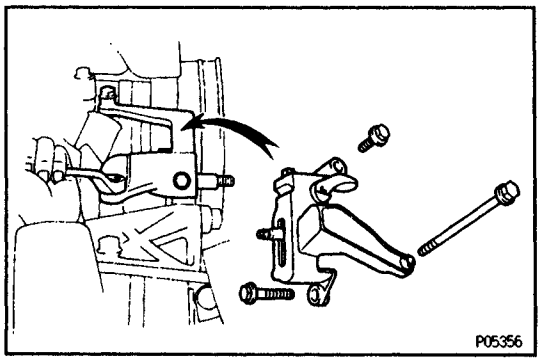

(g) Disconnect the A/C compressor connector.
(h) Remove the three bolts and idler pulley bracket.

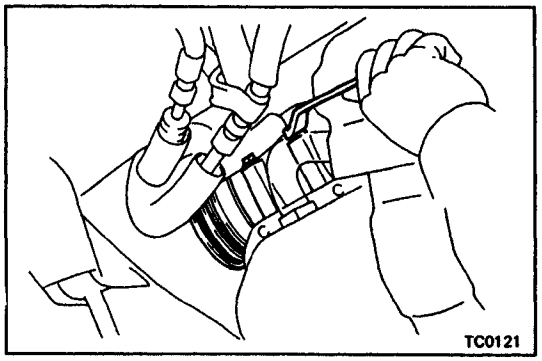

(i) Remove the two bolts, and disconnect the A/C com–pressor from the engine.

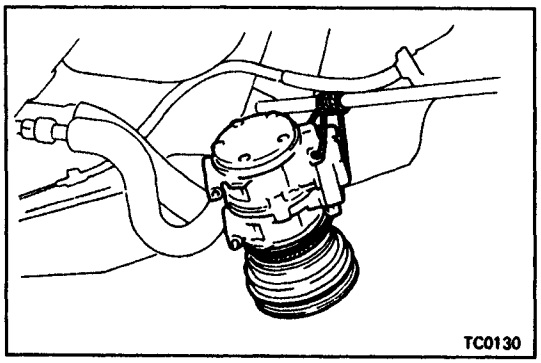

HINT: Suspend the A/C compressor to strut rod with a string.

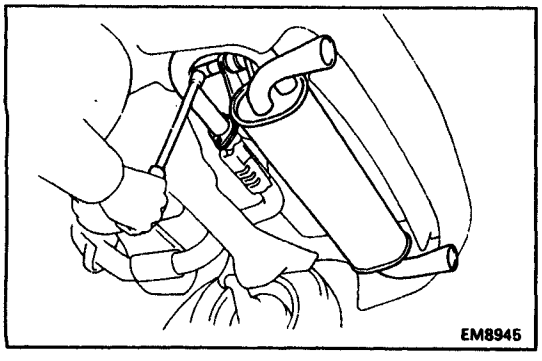

10. REMOVE TAILPIPE

(a) Remove the two bolts holding the front exhaust pipe to the tailpipe bracket.
(b) Remove the two bolts holding the front exhaust pipe to the tailpipe.
(c) Remove the two bolts, tailpipe and gasket.

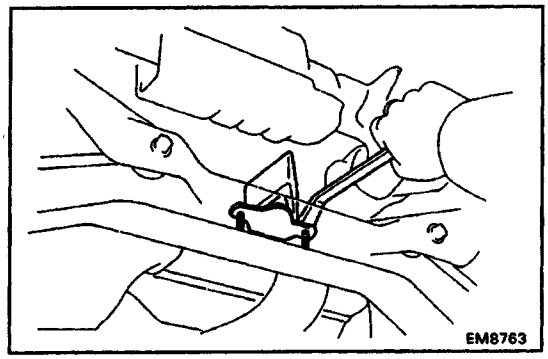

11. REMOVE FRONT EXHAUST PIPE

(a) Remove the two bolts and damper.

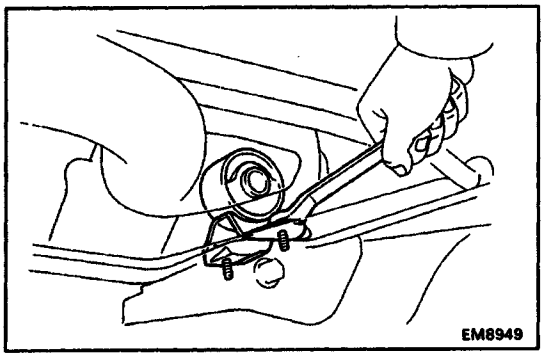

(b) Remove the two bolts and support bracket.

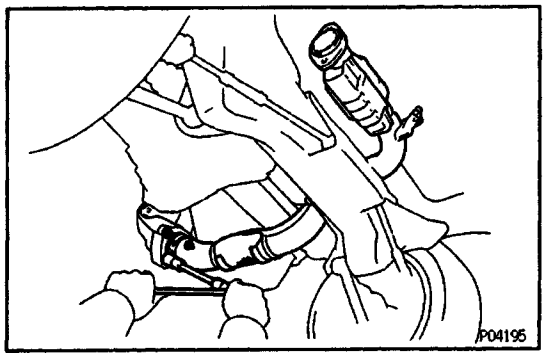

(c) Using a 14 mm deep socket wrench, remove the three nuts.

(d) Remove the front exhaust pipe and gasket.

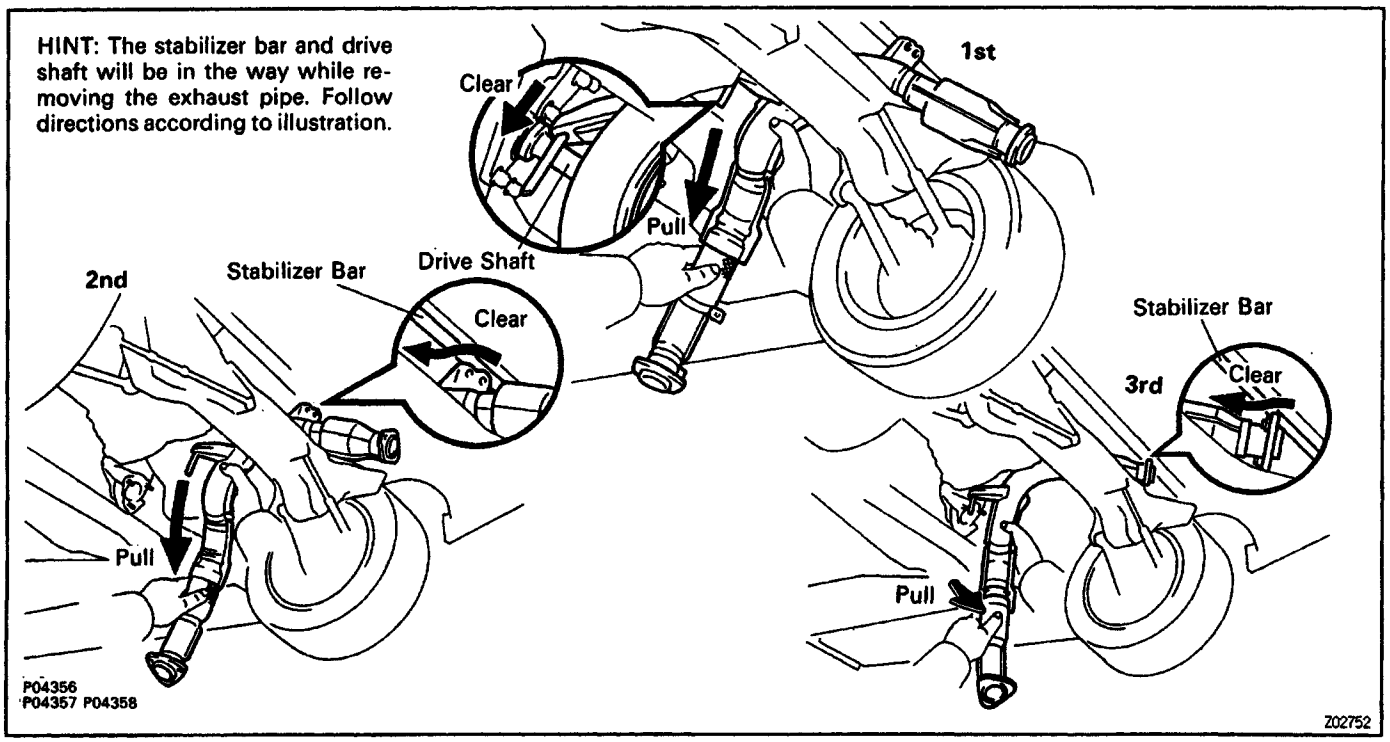

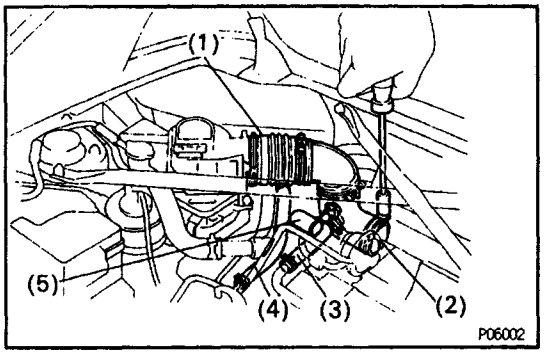

12. REMOVE AIR CLEANER HOSE

Disconnect the following hoses, and remove the air cleaner hose:

(1) Air cleaner hose from air flow sensor
(2) Air cleaner hose from turbocharger
(3) PCV hose from cylinder head cover
(4) Air hose from No.2 air hose
(5) Air hose from air by–pass valve

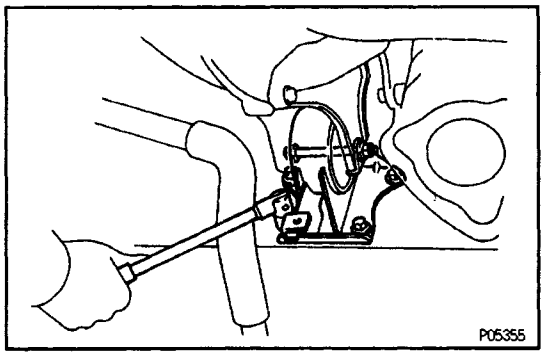

13. REMOVE FRONT ENGINE MOUNTING INSULATOR

(a) Remove the through bolt and nut holding the mounting insulator to the mounting bracket.
(b) Remove the four bolts and mounting insulator.

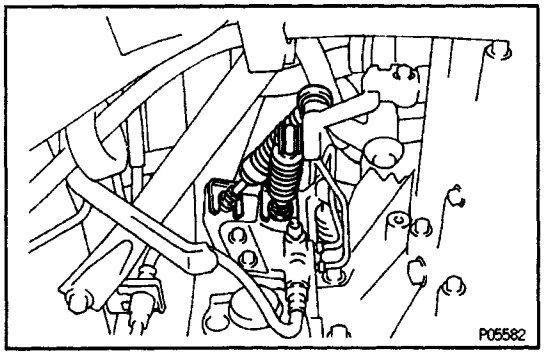

14. REMOVE FRONT ENGINE MOUNTING BRACKET AND CLUTCH RELEASE CYLINDER

(a) Disconnect the two transaxle control cables from the transaxle.

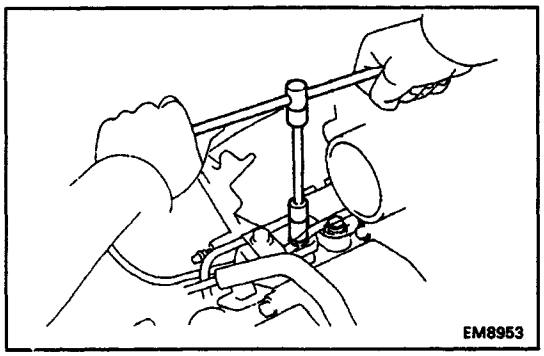

(b) Remove the two bolts holding the clutch release cylinder to the transaxle.

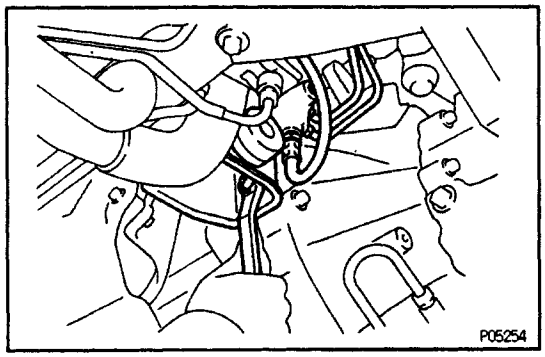

(c) Remove the two bolts and mounting bracket.
(d) Disconnect the clutch release cylinder from the transaxle.

Remove the three bolts and stiffener plate.

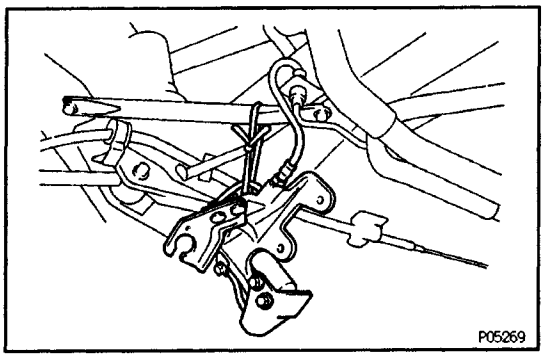

HINT: Suspend the clutch release cylinder to the suspension brace with a string.

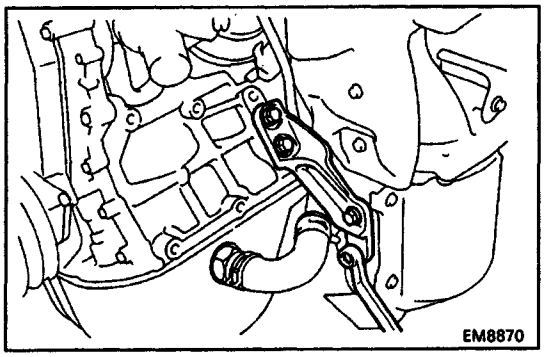

15. REMOVE MAIN TWC

(a) Remove the four bolts and RH TWC stay.

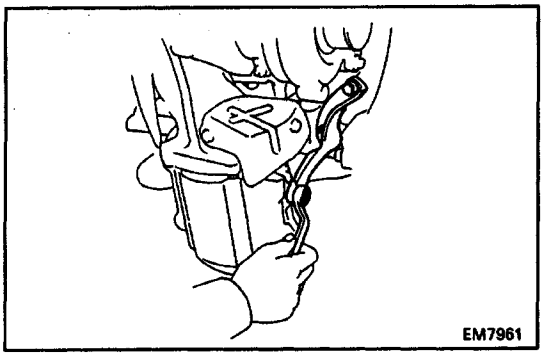

(b) Remove the three bolts and LH TWC stay.

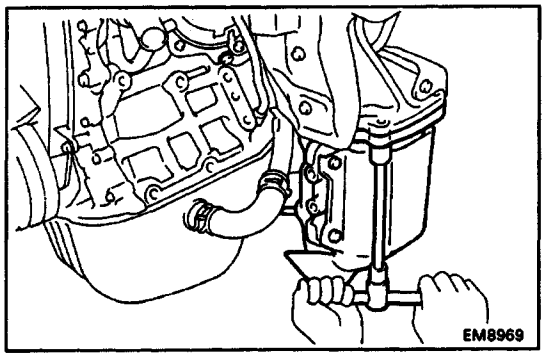

(c) Remove the three bolts, two nuts, TWC, gasket, retainer and cushion.

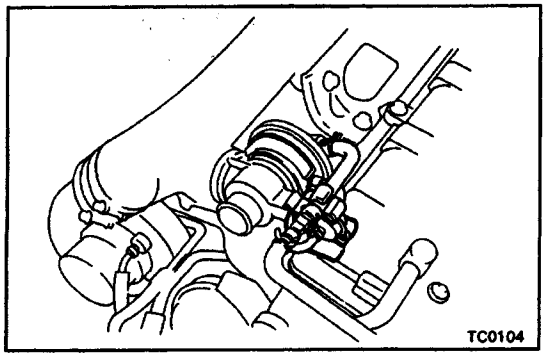

16. DISCONNECT AIR BY–PASS HOSES

(a) Disconnect the hose and VTV from the clamp.

(b) Disconnect the two air by–pass hoses.

17. REMOVE CLAMPS OF AIR BY–PASS HOSE AND VTV

Remove the bolt and two clamps.

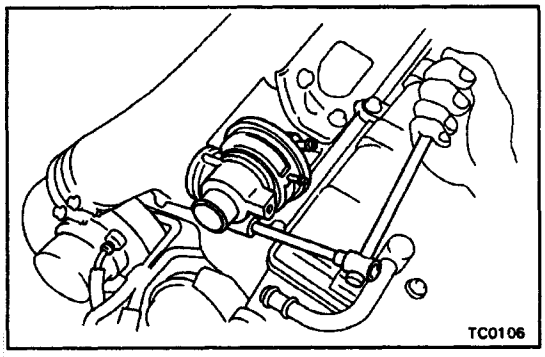

18. REMOVE AIR BY–PASS VALVE

(a) Remove the bolt and air by–pass valve.

(b) Remove the O–ring from the air by–pass valve.

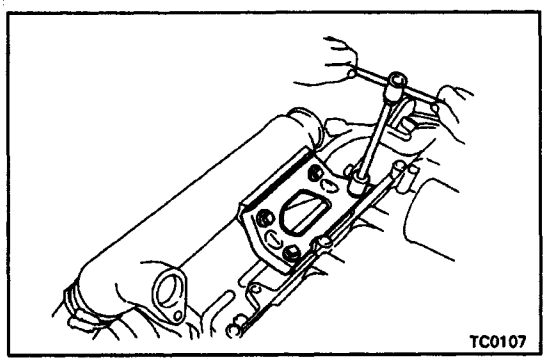

19. REMOVE NO.4 AIR TUBE

(a) Remove the four bolts and air tube stay.

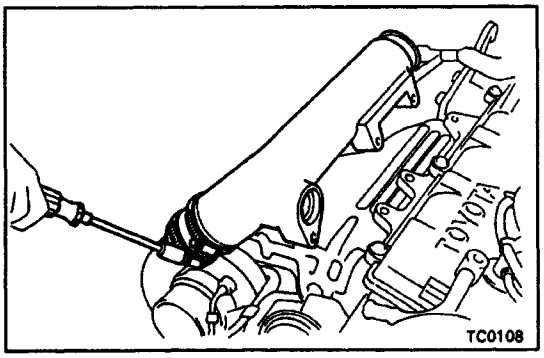

(b) Loosen the hose clamp, and remove the air tube.

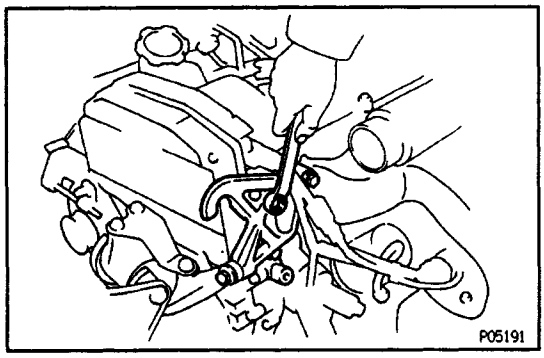

20. REMOVE RH FRONT ENGINE HANGER

Remove the four bolts and engine hanger.

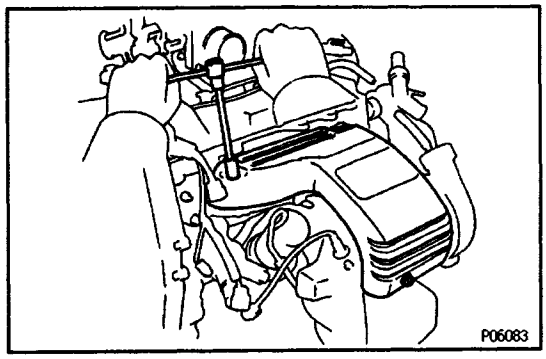

21. REMOVE TURBOCHARGER 'HEAT INSULATOR

Remove the three bolts and heat insulator.

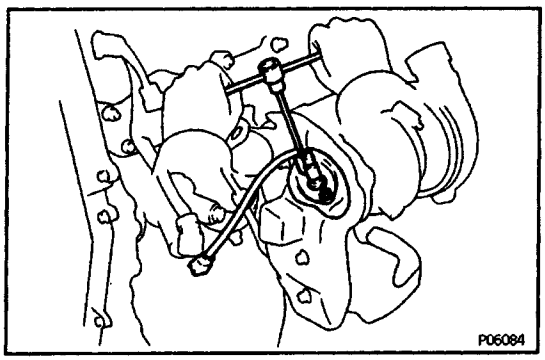

22. REMOVE OXYGEN SENSOR

(a) Disconnect the oxygen sensor connector.
(b) Remove the two nuts, cover, oxygen sensor and gasket.

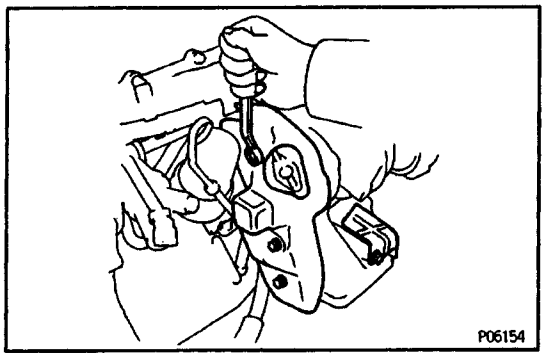

23. REMOVE HEAT INSULATORS OF TURBINE OUTLET ELBOW

(a) Remove the oil dipstick.
(b) Remove the three bolts and RH heat insulator.
(c) Remove the two bolts and LH heat insulator.

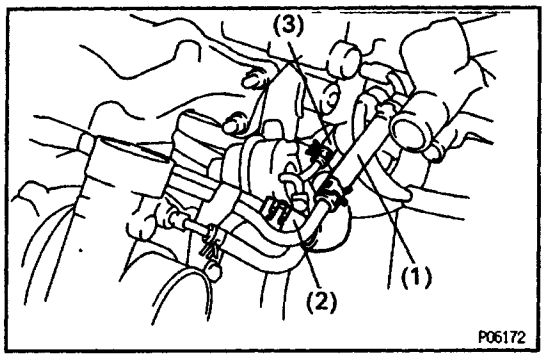

24. DISCONNECT HOSES

Disconnect the following hoses:
(1) Water hose from water inlet housing
(2) Water hose from water by–pass pipe
(3) Air hose from actuator

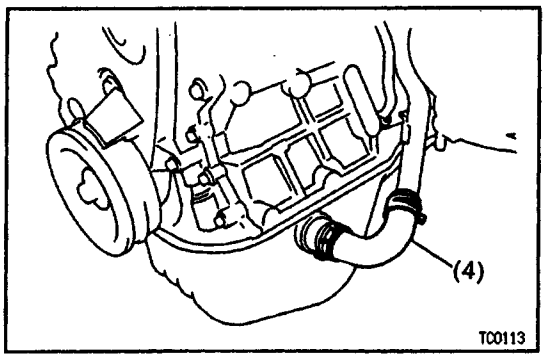

(4) Oil hose from turbo oil pipe

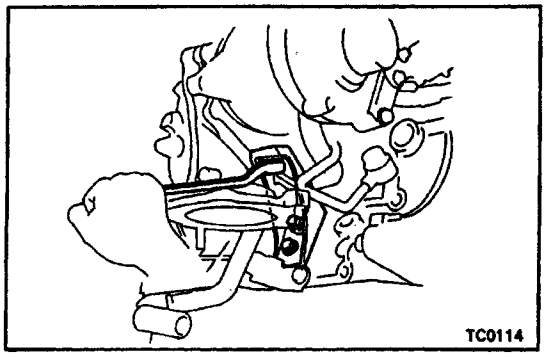

25. REMOVE TURBOCHARGER STAY

Remove the three bolts and turbocharger stay.

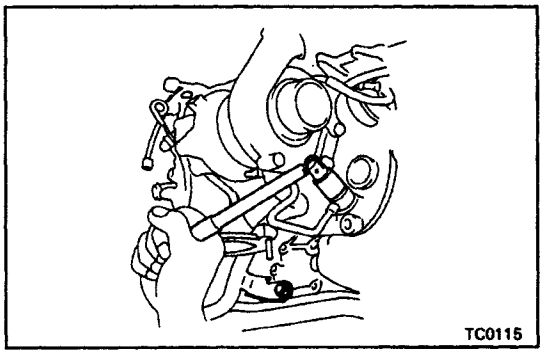

26. REMOVE TURBOCHARGER

(a) Remove the bolt and union bolt holding the No. 1 turbo oil pipe to the cylinder block. Remove the two union bolt gaskets.

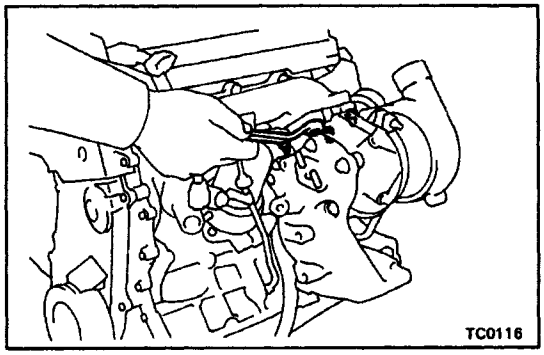

(b) Remove the four nuts, turbocharger and gasket.

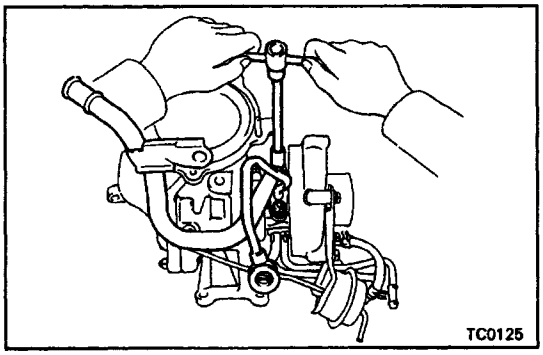

27. REMOVE TURBO OIL PIPE

Remove the two nuts, oil pipe and gasket.

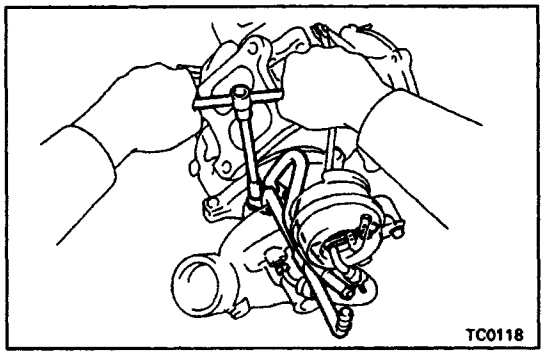

28. REMOVE TURBO WATER PIPE

Remove the two nuts, two bolts, water pipe and gasket.

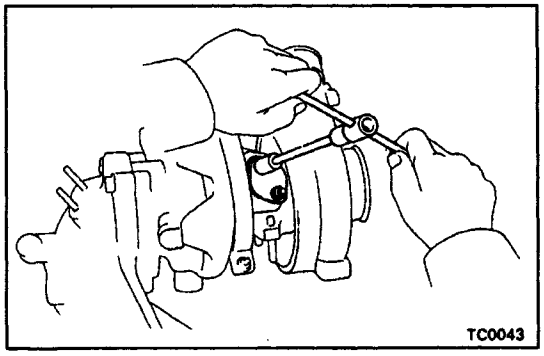

29. REMOVE SIDE BEARING HOUSING PLATE

Remove the two nuts, housing plate and gasket.

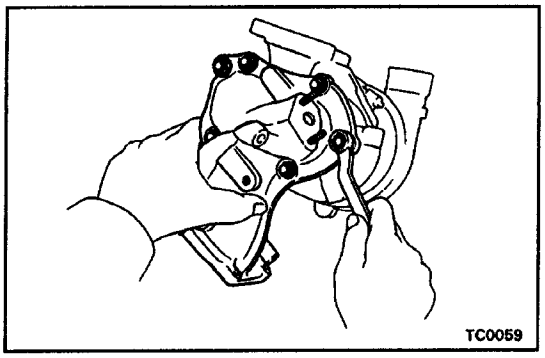

30. REMOVE TURBING OUTLET ELBOW

Remove the six nuts, outlet elbow and gasket.

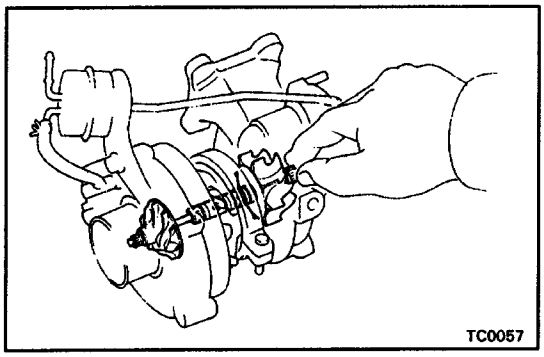

EG0X3–01

TURBOCHARGER INSPECTION

1. INSPECT IMPELLER WHEEL ROTATION

Grasp the edge of the turbine wheel and turn it. Check that the impeller wheel turns smoothly.

If the impeller wheel does not turn or if it turns with a drag, replace the turbocharger assembly.

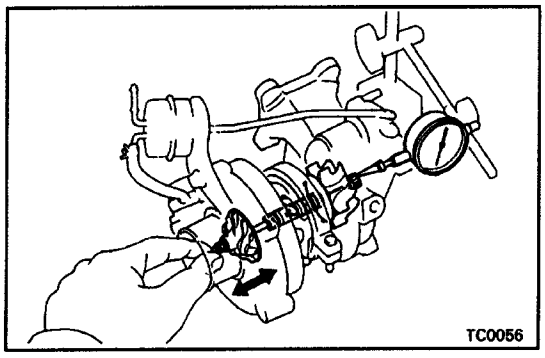

2. INSPECT AXIAL PLAY OF IMPELLER WHEEL

Insert a dial indicator into the intake side hold the turbine wheel edge by hand, and check the axial play.

Standard clearance:

0.13 mm (0.0051 in.) or less

If the axial play is not as specified, replace the turbocharger assembly.

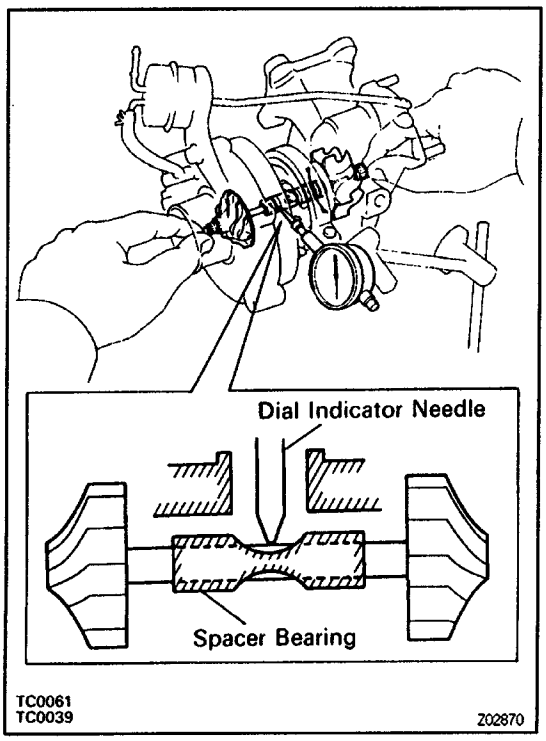

3. INSPECT RADIAL PLAY OF IMPELLER WHEEL

(a) From oil outlet hole, insert a dial indicator through the hole in the spacer bearing and set it in the center of the impeller shaft.

(b) Move the impeller shaft in a radial direction, measure the radial play of the impeller shaft.

Standard clearance:

0.18 mm (0.0071 in.) or less

If the radial play is not as specified, replace the turbocharger assembly.

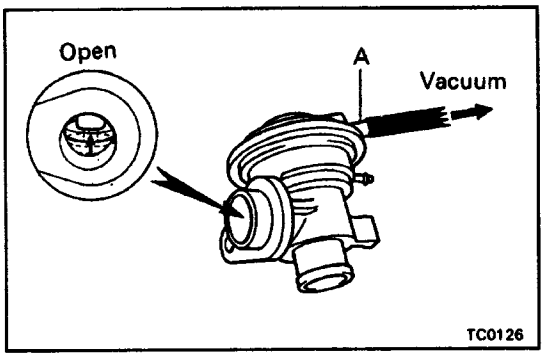

4. INSPECT AIR BY–PASS VALVE

(a) Apply vacuum to port A, and check that the valve is open.

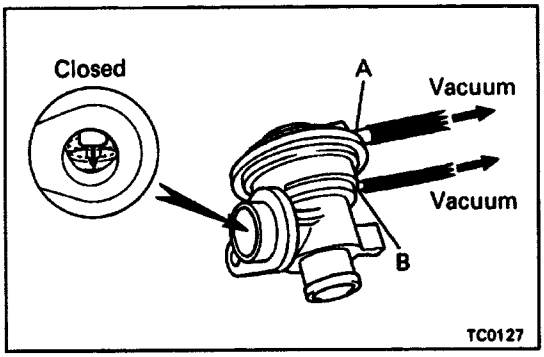

(b) In the preceding condition, apply vacuum to port B, and check that the valve is closed.
If operation is not as specified, replace the valve.

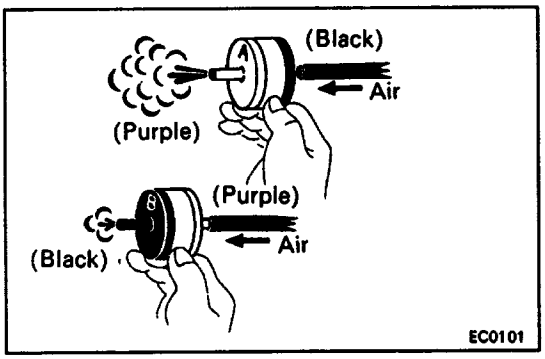

5. INSPECT VTV (FOR AIR BY–PASS VALVE)

(a) Check that air flows without resistance from ports ”B” to “A“.

(b) Check that air flows without difficulty from ports ”A” to “13“.
If operation is not as specified, replace the VTV.

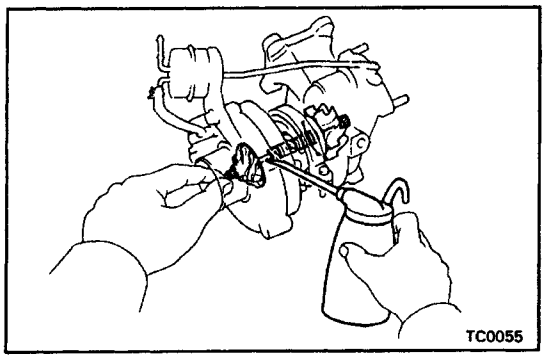

TURBOCHARGER INSTALLATION

EG0X4–01

(See Components for Removal and Installation)

NOTICE: After replacing the turbocharger assembly, pour approx. 20 cm' (1.2 cu in.) of fresh oil into the oil inlet and turn the impeller wheel by hand to splash oil on the bearing.

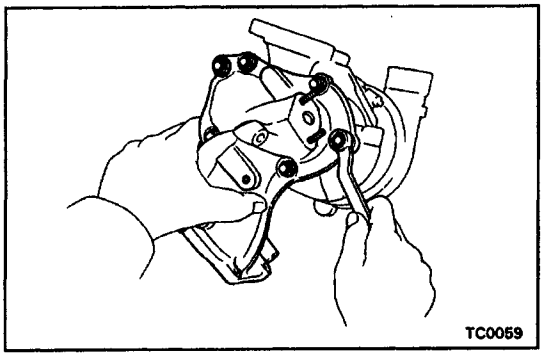

1. INSTALL TURBINE OUTLET ELBOW

Install a new gasket and the outlet elbow with the six nuts.

Torque: 64 N–m (650 kgf–cm, 47 ft–lbf)

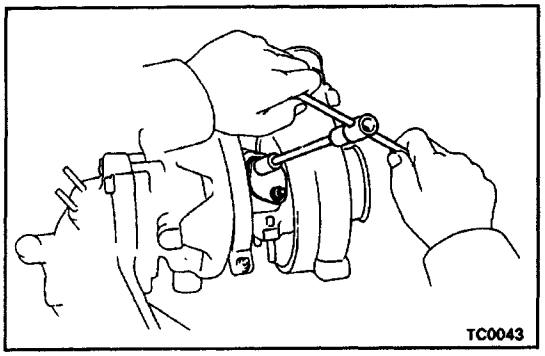

2. INSTALL SIDE BEARING HOUSING PLATE

Install a new gasket and the housing plate with the two nuts.

Torque: 11 N .m (120 kgf–cm, 9 ft–lbf)

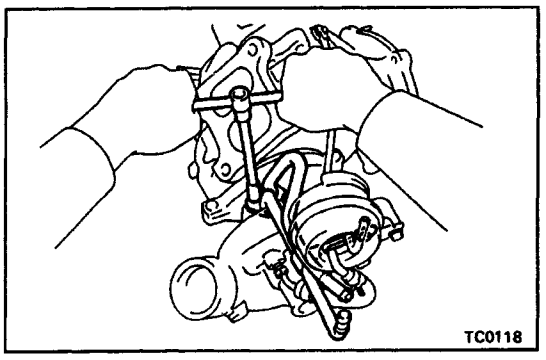

3. INSTALL TURBO WATER PIPE

Install a new gasket and the water pipe with the two nuts and two bolts.

Torque:. 11 N–m (120 kgf–cm, 9 ft–lbf)

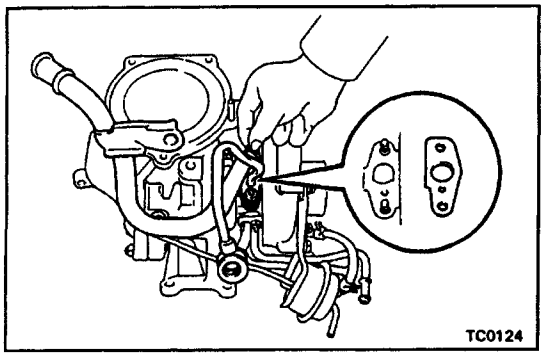

4. INSTALL TURBO OIL PIPE

(a) Align the oil holes of the a new gasket and the tur–, bocharger housing.

(b) Install the gasket and oil pipe with the two nuts. Do not torque the nuts yet.

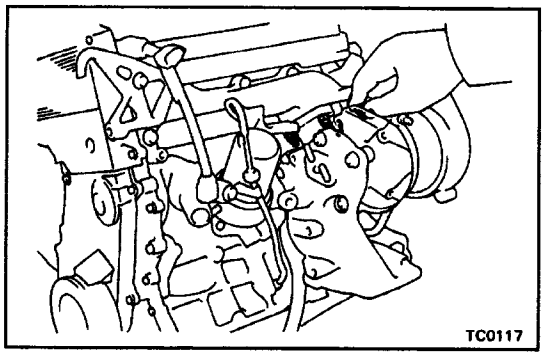

5. INSTALL TURBOCHARGER

(a) Install a new gasket and the turbocharger with the four nuts. Do not torque the nuts.

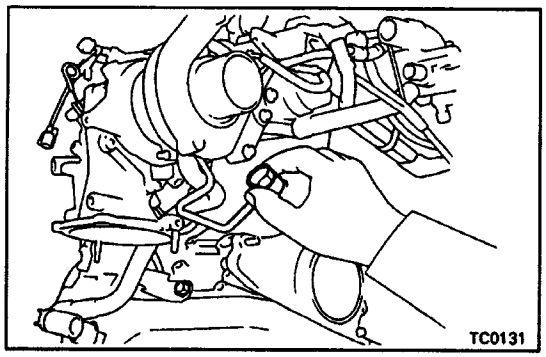

(b) Install the oil pipe with the bolt, two new gaskets and union bolt. Do not torque the bolt and union bolt.

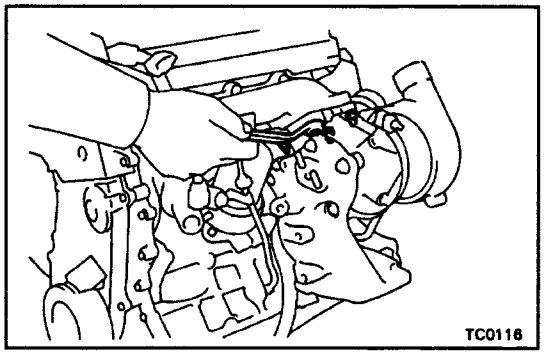

(c) Tighten the four nuts holding the turbocharger to the exhaust manifold.
Torque: 64 N–m (650 kgf–cm, 47 ft–lbf)

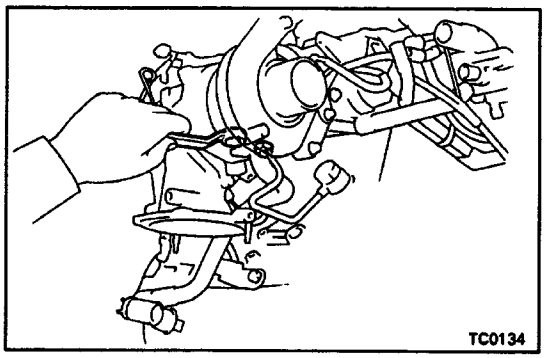

(d) Tighten the two nuts holding the oil pipe to the turbocharger.
Torque: 17 N–m (175 kgf–cm, 13 ft–lbf)

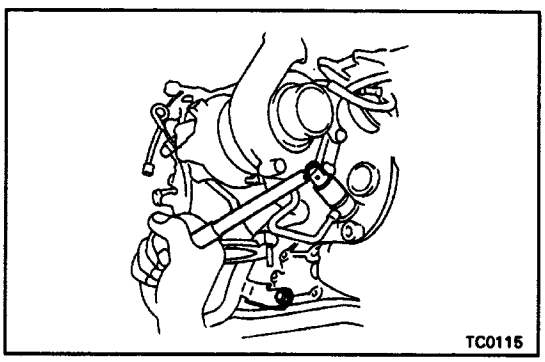

(e) Tighten the union bolt holding the oil pipe to the cylinder block.
Torque: 51 N–m (525 kgf–cm, 38 ft–lbf)

(f) Tighten the bolt holding the bracket of the oil pipe to the cylinder block.
Torque: 43 N–m (440 kgf–cm, 32 ft–lbf)

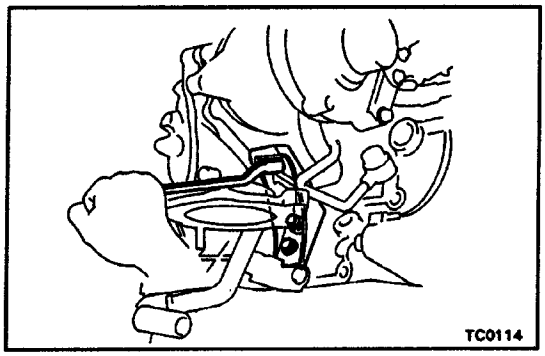

6. INSTALL TURBOCHARGER STAY

Install the turbocharger stay with the three bolts.

Torque:

69 N–m (705 kgf–cm, 51 ft–lbf) for turbocharger side

59 N–m (600 kgf–cm, 43 ft–lbf) for cylinder block side

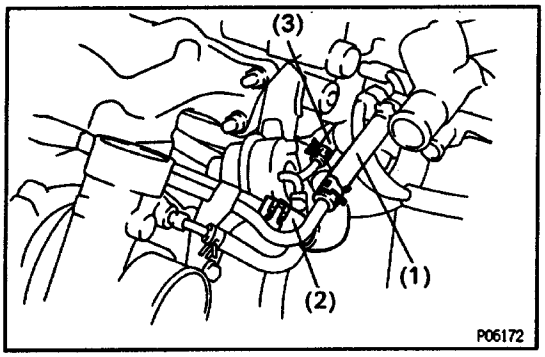

7. CONNECT HOSES

Disconnect the following hoses:

(1) Water hose to water inlet housing

(2) Water hose to water by–pass pipe

(3) Air hose to actuator

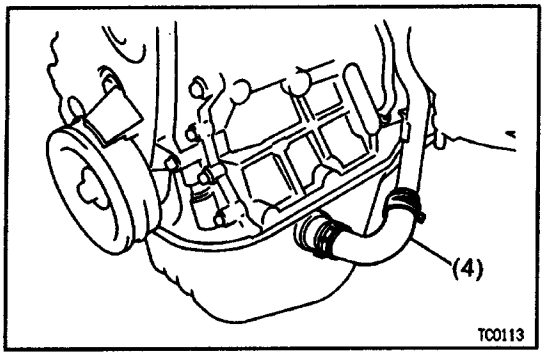

(4) Oil hose to turbo oil pipe

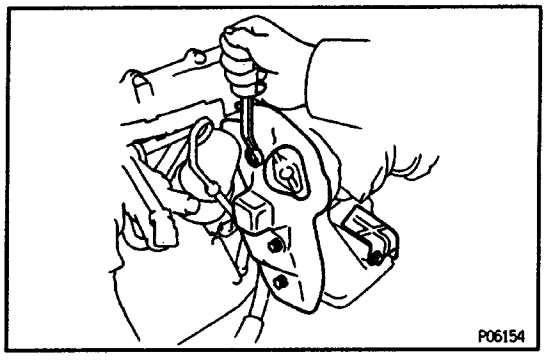

8. INSTALL HEAT INSULATORS OF TURBINE OUTLET ELBOW

(a) Install the RH heat insulator with the three bolts.

(b) Install the LH heat insulator with the two bolts.

(c) Install the oil dipstick.

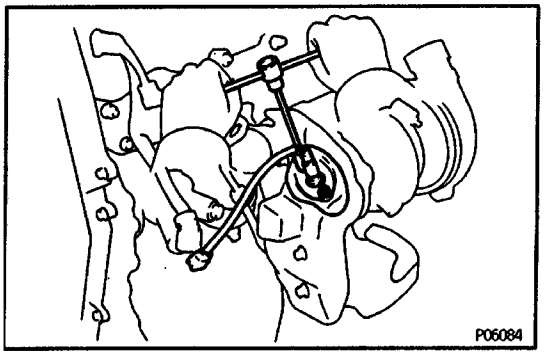

9. INSTALL OXYGEN SENSOR

(a) Install a new gaskets, the oxygen sensor and cover with the two nuts.

Torque: 44 N–m (450 kgf–cm, 33 ft–lbf)

(b) Connect the oxygen sensor connector.

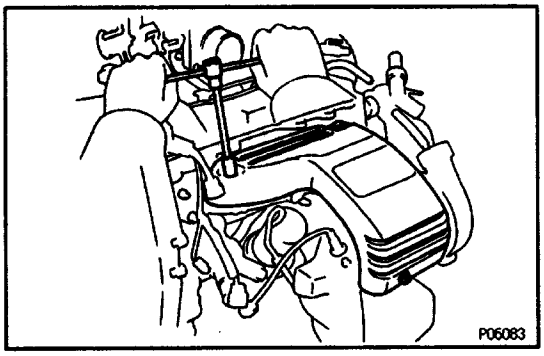

10. INSTALL TURBOCHARGER HEAT INSULATOR

Install the heat insulator with the three bolts.

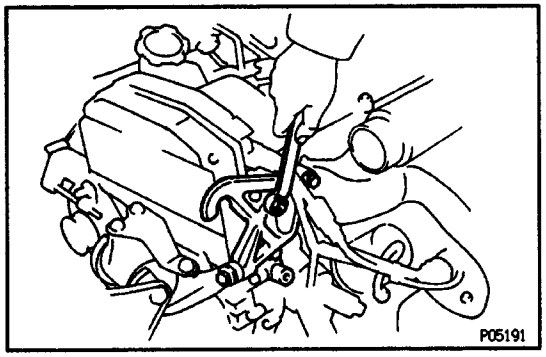

11. INSTALL RH FRONT ENGINE HANGER

Install the engine hanger with the four bolts.

Torque:

39 N–m (400 kgf–cm 29 ft–lbf) for cylinder head

61 N–m (620 kgf–cm 45 ft–lbf) for mounting bracket

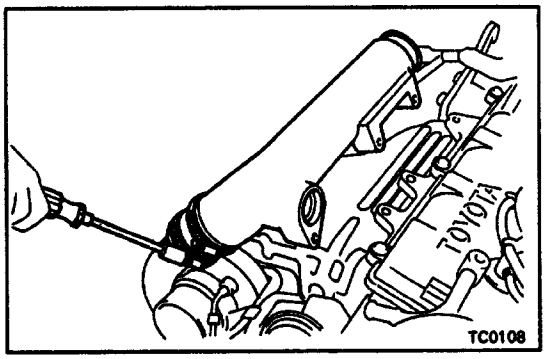

12. INSTALL NO.4 AIR TUBE

(a) Connect the air connector and air tube to the turbo–charger.

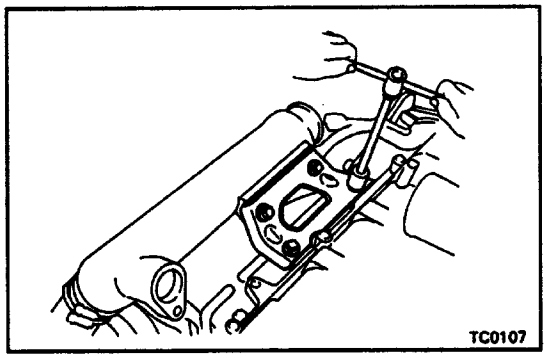

(b) Install the air tube stay with the four bolts.

Torque: 19 N–m (195 kgf–cm, 14 ft–lbf)

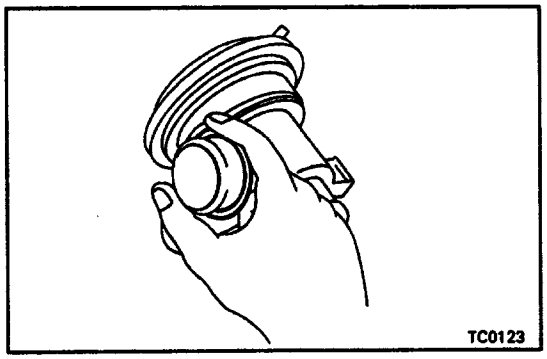

13. INSTALL AIR BY–PASS VALVE

(a) Install a new O–ring to the air by–pass valve.

(b) Apply soapy water on the O–ring.

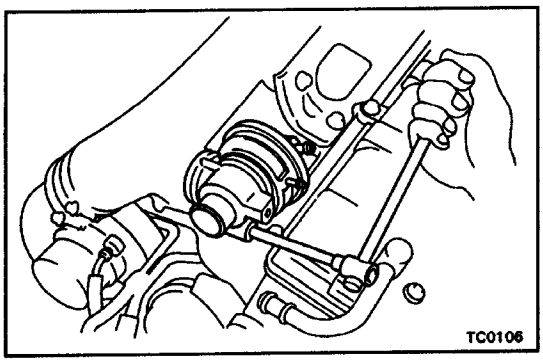

(c) Install the air by–pass valve with the bolt.
Torque: 19 N–m (195 kgf–cm, 14 ft–lbf)

14. INSTALL CLAMPS OF AIR BY–PASS HOSE AND VTV

Install the two clamps with the bolt.

15. CONNECT AIR BY–PASS HOSES

(a) Connect the two air by–pass hoses.
(b) Install the air by–pass hose and VTV to the clamps.

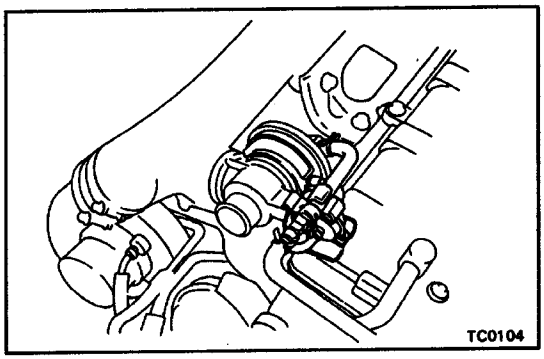

16. INSTALL MAIN TWC

(a) Place the cushion, retainer and a new gasket on the TWC.

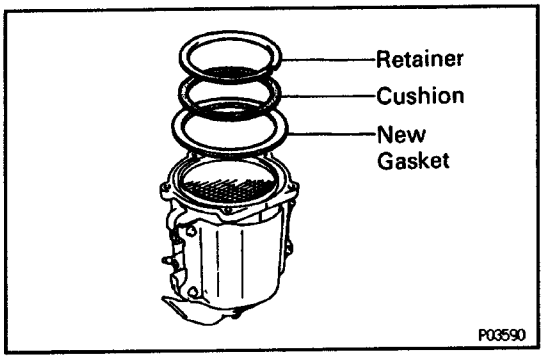

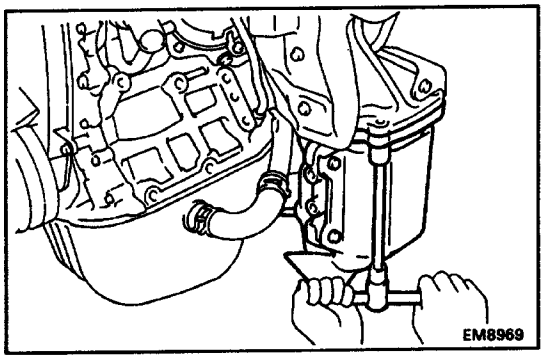

(b) Install the TWC with the three bolts and two nuts.
Torque: 29 N–m (300 kgf–cm, 22 ft–lbf)

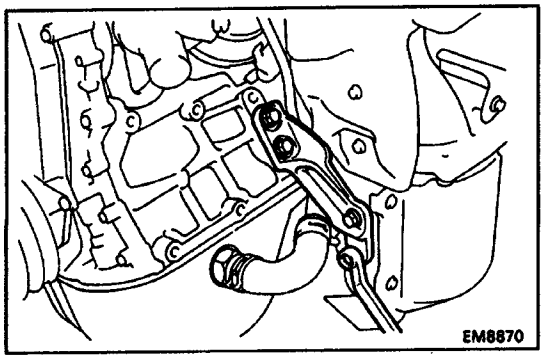

(c) Install the RH TWC stay with the four bolts.
Torque: 59 N–m (600 kgf–cm, 43 ft–lbf)

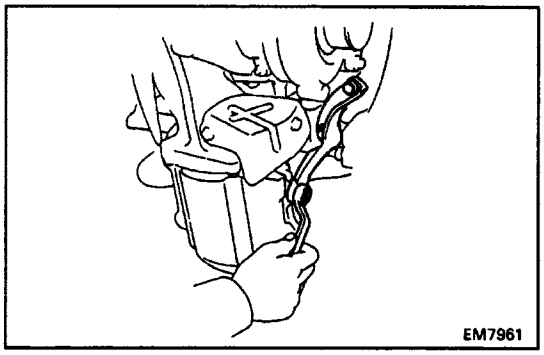

(d) Install the LH TWC stay with the three bolts.
Torque: 59 N–m (600 kgf–cm, 43 ft–lbf)

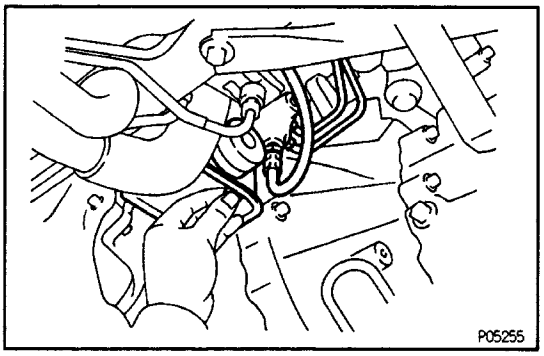

17. INSTALL CLUTCH RELEASE CYLINDER AND FRONT ENGINE MOUNTING BRACKET

(a) Temporarily install the release cylinder and mounting bracket with the two bolts.

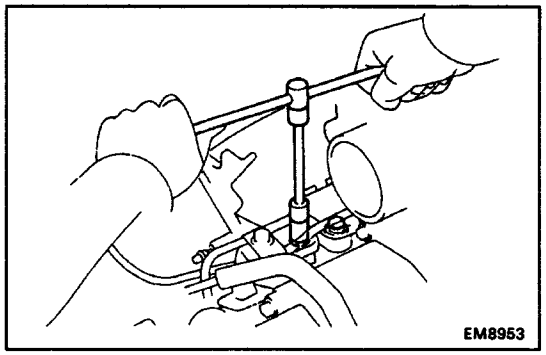

(b) Install the clutch release cylinder with the two bolts.
Torque: 12 N–m (120 kgf–cm, 9 ft–lbf)

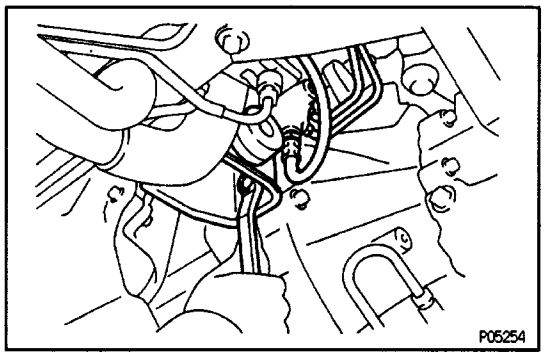

(c) Tighten the two bolts holding the clutch release cyl–inder to the transaxle.
Torque: 77 N–m (790 kgf–cm, 57 ft–lbf)

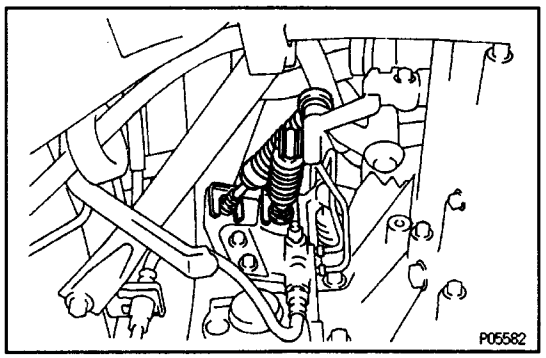

(d) Connect the two transaxle control cables to the tra–nsaxle.

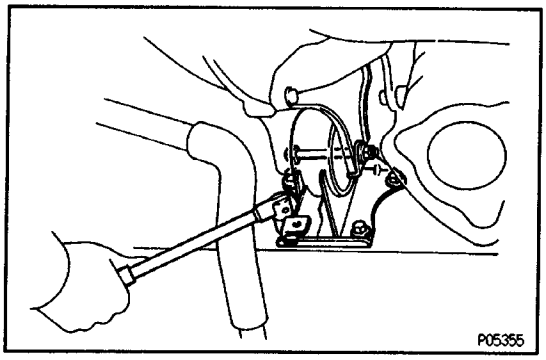

18. INSTALL FRONT ENGINE MOUNTING INSULATOR

(a) Install the mounting insulator to the body with the four bolts.
Torque: 77 N–m (790 kgf–cm, 57 ft–lbf)

(b) Install the mounting insulator to the mounting bracket with the through bolt and nut.
Torque: 96 N–m (980 kgf–cm, 71 ft–lbf)

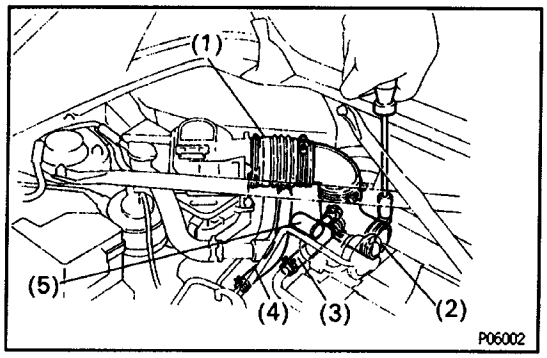

19. REMOVE AIR CLEANER HOSE

Disconnect the following hoses, and remove the air cleaner hose:
(1) Air cleaner hose from air flow sensor
(2) Air cleaner hose from turbocharger
(3) PCV hose from cylinder head cover
(4) Air hose from No.2 air hose
(5) Air hose from air by–pass valve

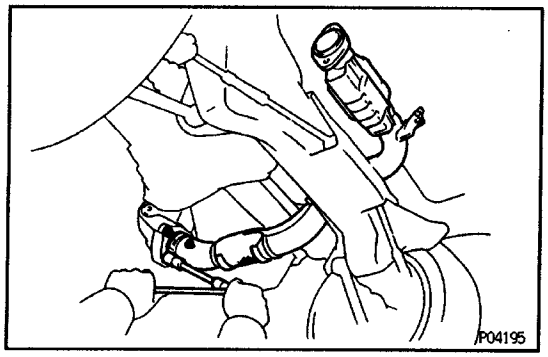

20. INSTALL FRONT EXHAUST PIPE

(a) Place a new gasket to the front of the front exhaust pipe.

(b) Using a 14 mm deep socket wrench, install the front exhaust pipe with three new nuts.
Torque: 62 N–m (630 kgf–cm, 46 ft–lbf)

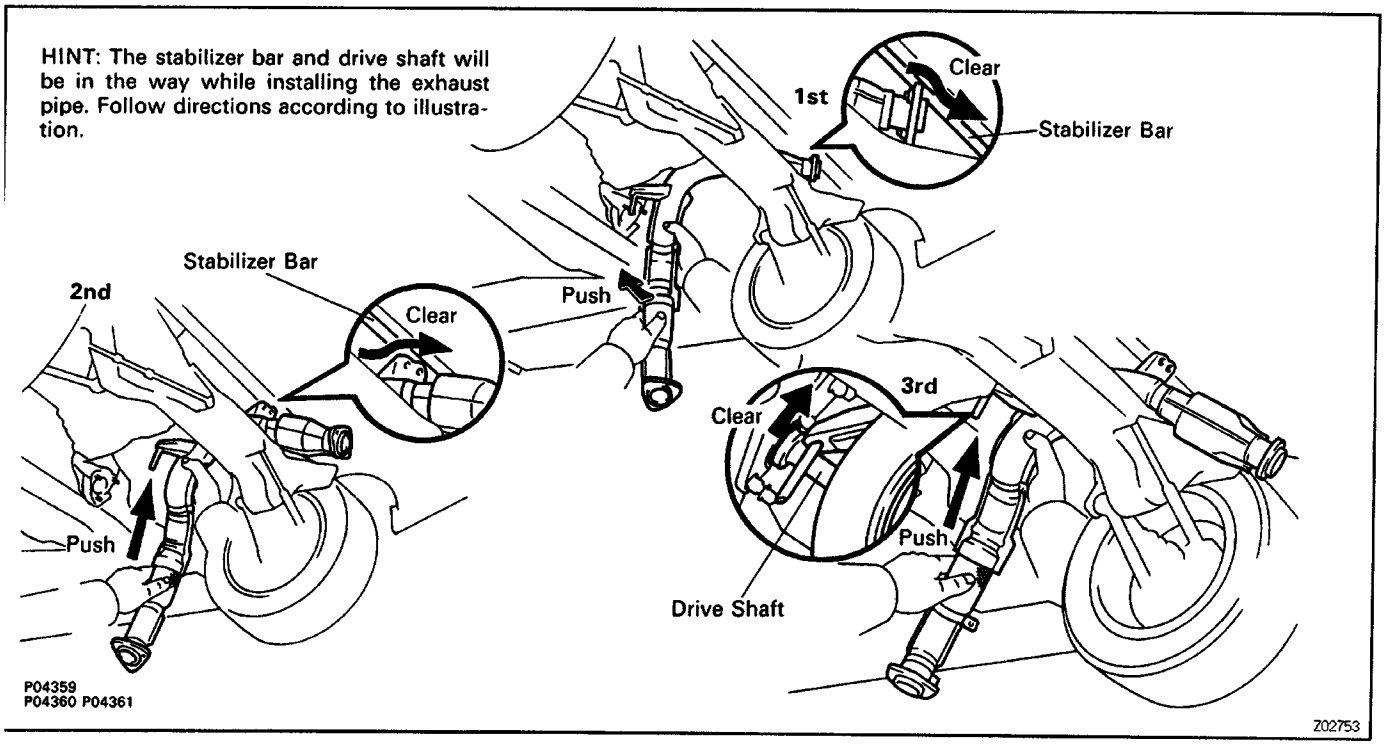

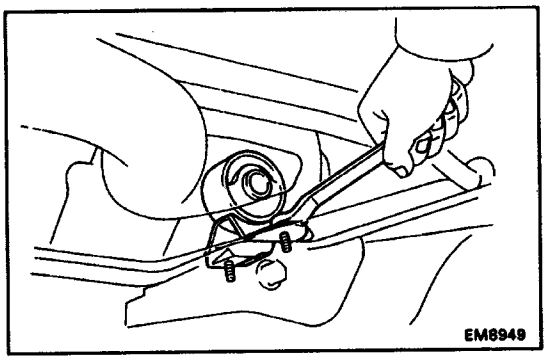

(c) Install the support bracket with the two bolts.
Torque: 21 N–m (210 kgf–cm, 15 ft–lbf)

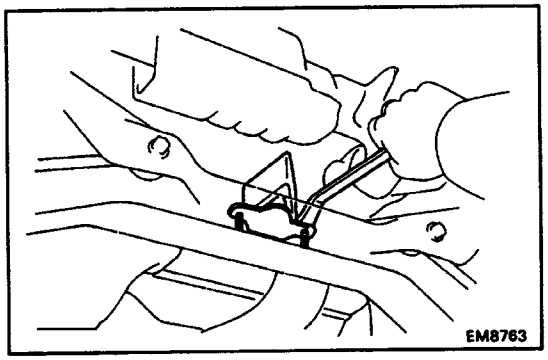

(d) Install the damper with the two bolts.
Torque: 21 N–m (210 kgf–cm, 15 ft–lbf)

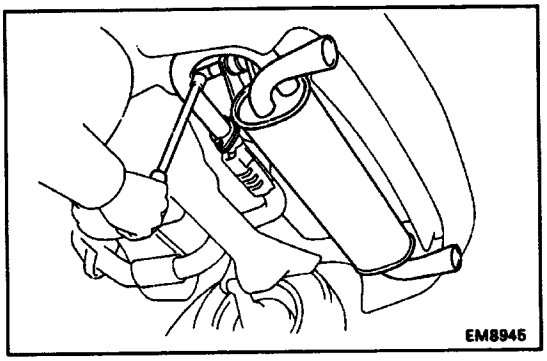

21. INSTALL TAILPIPE

(a) Place a new gasket to the rear of the front exhaust pipe.
(b) Install the tailpipe to the body bracket with the two bolts and nut.
Torque:66 N–m (670 kgf–cm, 48 ft–lbf)
(c) Install the two bolts holding the front exhaust pipe tc the tailpipe.
Torque: 43 N–m (440 kgf–cm, 32 ft–lbf)
(d) Install the two bolts holding the front exhaust pipe bracket to the tailpipe bracket.
Torque: 19 N–m (190 kgf–cm, 14 ft–lbf)

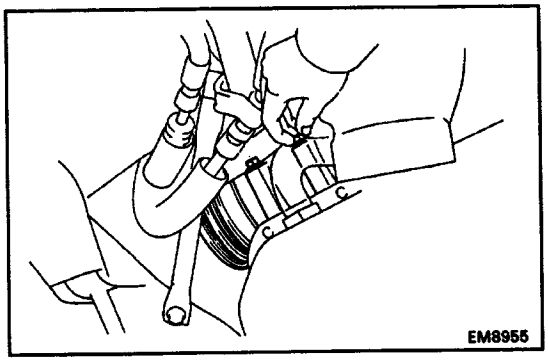

22. INSTALL A/C COMPRESSOR

(a) Temporarily install the A/C compressor two bolts.

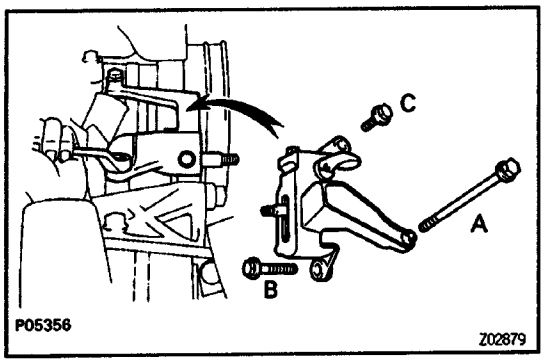

(b) Install the idler pulley bracket with the three bolts.

Torque:

25 N–m (250 kgf–cm, 18 ft–lbf) for A
27 N–m (275 kgf–cm, 20 ft–lbf) for B
37 N–m (375 kgf–cm, 27 ft–lbf) for C

(c) Connect the A/C compressor connector.

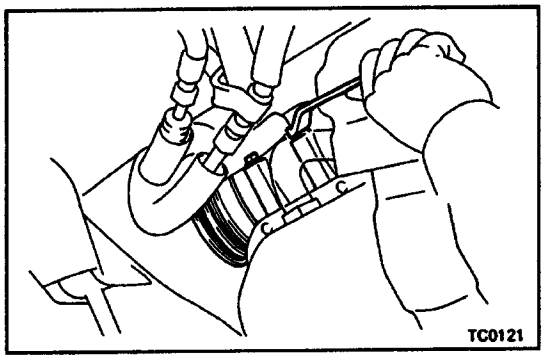

(d) Tighten the two bolts of the lower side of the A/C compressor.

Torque: 25 N–m (260 kgf–cm, 18 ft–lbf)

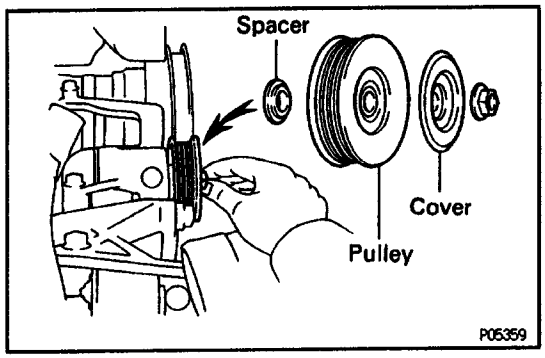

(e) Temporarily install the spacer, pulley and pulley cover with the nut.

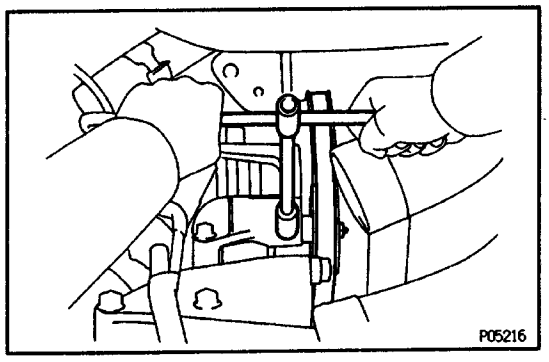

(f) Install the drive belt with the adjusting bolt.

(g) Tighten the idler pulley nut.

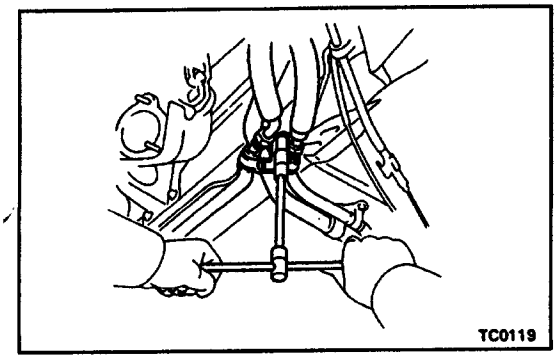

(h) Install the two A/C pipes with the two clamps and nut.

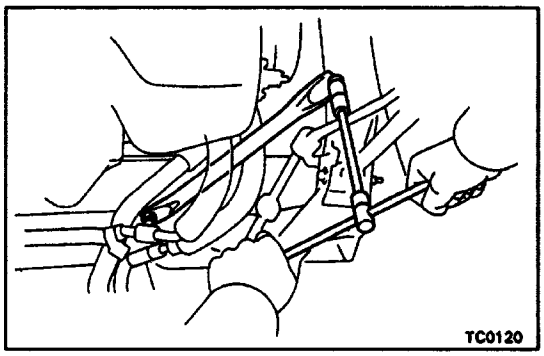

(i) Install the lower suspension brace with the two bolts.
Torque: 73 N–m (740 kgf–cm, 54 ft–lbf)

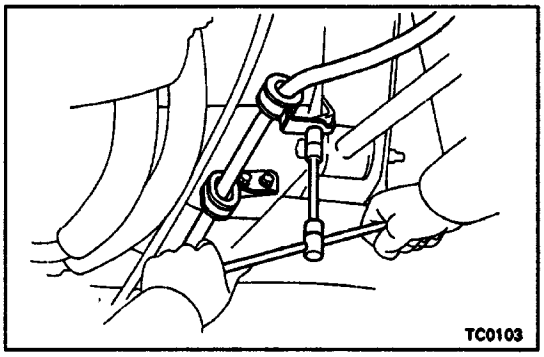

(j) Install the parking brake cable with the two clamps and three bolts.

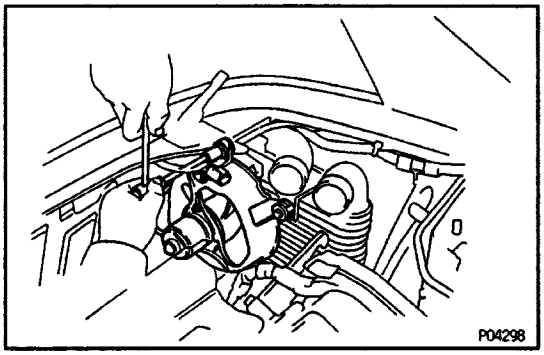

23. INSTALL ENGINE COMPARTMENT COOLING FAN
(a) Install the cooling fan with the three bolts.
(b) Connect the cooling fan connector.

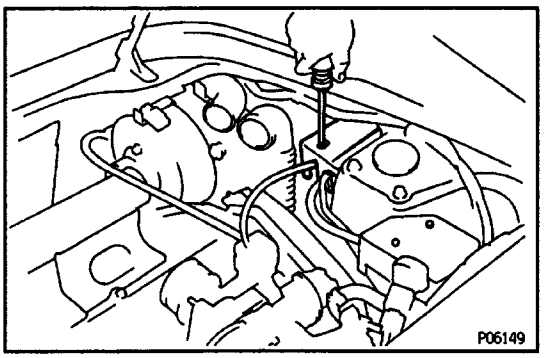

24. (w/ CRUISE CONTROL SYSTEM) INSTALL CRUISE CONTROL ACCELERATOR LINKAGE

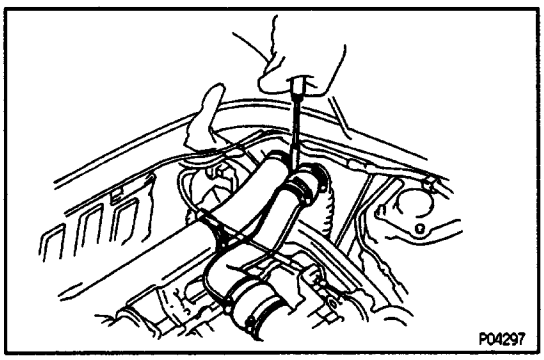

25. INSTALL NO.1 AND NO.2 INTAKE AIR CONNECTORS

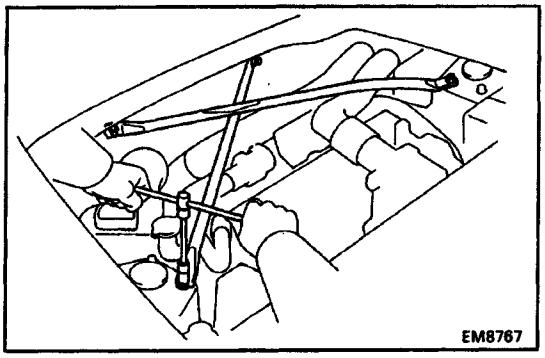

26. INSTALL UPPER SUSPENSION BRACE

Install the upper brace with the two bolts and two nuts.

Torque:

73 N–m (740 kgf–cm, 54 ft–lbf) for bolt
64 N–m (650 kgf–cm, 47 ft–lbf) for nut

27. INSTALL RH ENGINE HOOD SIDE PANEL
28. CONNECT CABLE TO NEGATIVE TERMINAL OF BATTERY
29. FILL WITH ENGINE COOLANT
30. START ENGINE AND CHECK FOR LEAKS
31. CHECK ENGINE OIL LEVEL
32. RECHECK ENGINE COOLANT LEVEL
33. INSTALL ENGINE UNDER COVERS

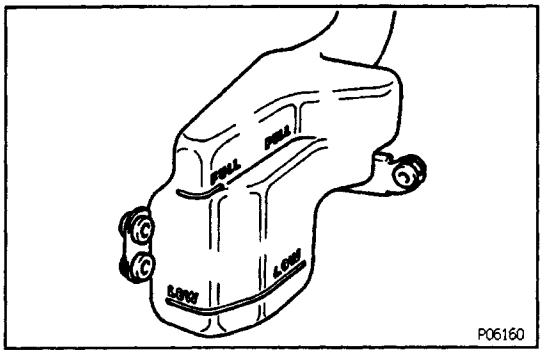

COOLANT CHECK

1. CHECK ENGINE COOLANT LEVEL AT RESERVOIR TANK

The engine coolant level should be between the ”LOW” and ”FULL” lines.

If low, check for leaks and add engine coolant up to the ”FULL” line.

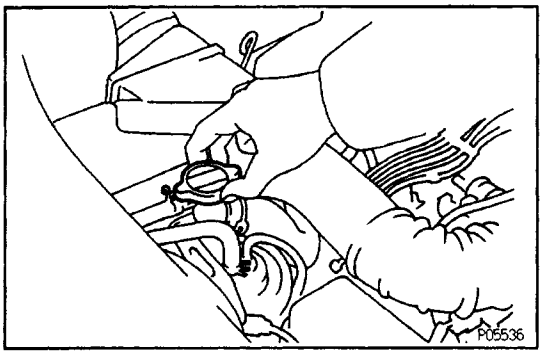

2. CHECK ENGINE COOLANT QUALITY

(a) Remove the radiator (water filler) cap.

CAUTION: To avoid the danger of being burned, do not remove it while the engine and radiator are still hot, as fluid and steam can be blown out under pressure.

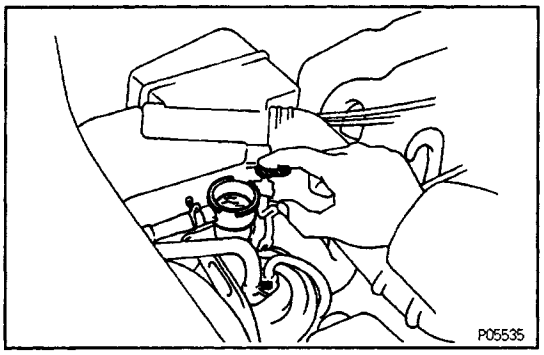

(b) There should not be any excessive deposits of rust or scales around the radiator cap or radiator filler hole, and the coolant should be free from oil.
If excessively dirty, replace the coolant.

(e) Reinstall the radiator (water filler) cap.

COOLANT REPLACEMENT

NOTICE: EG132–01

- **To avoid the danger of burns, do not begin work until the engine and coolant have properly cooled down.**
- **To ensure that coolant is poured in,properly, perform the operation at a level area. Performing work with the vehicle inclined may cause improper removal of coolant or improper air removal when pouring coolant.**
- **After replacing the coolant, check the water level in the water filler and reservoir tank once or twice within 500 km (311 miles) of driving or within one week.**

EG134–01

COOLANT CIRCUIT

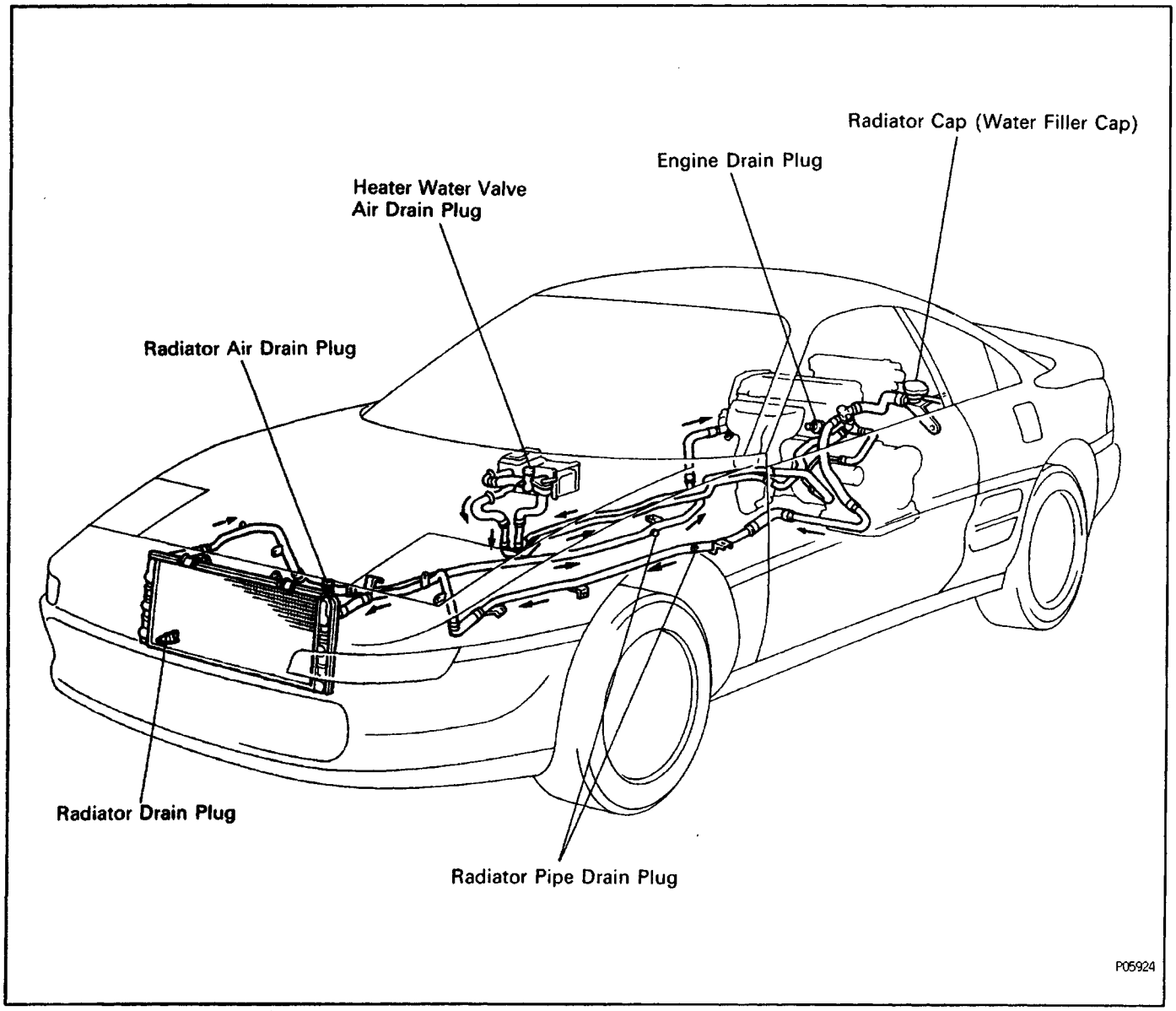

EG136–01

ENGINE COOLANT DRAINAGE

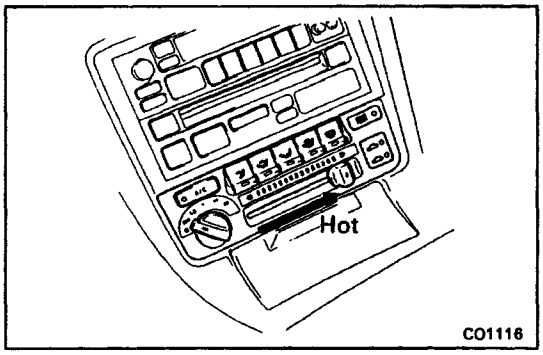

1. REMOVE REAR FUEL TANK PROTECTOR

2. DRAIN ENGINE COOLANT

(a) Set the heater control lever to hot.

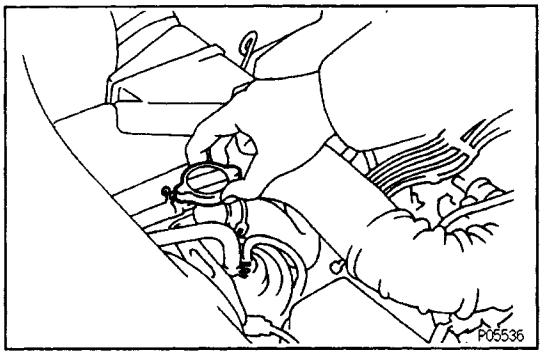

(b) Remove the radiator cap.

CAUTION: To avoid the danger of being burned, do not remove it while the engine and radiator are still hot, as fluid and steam can be blown out under pressure.

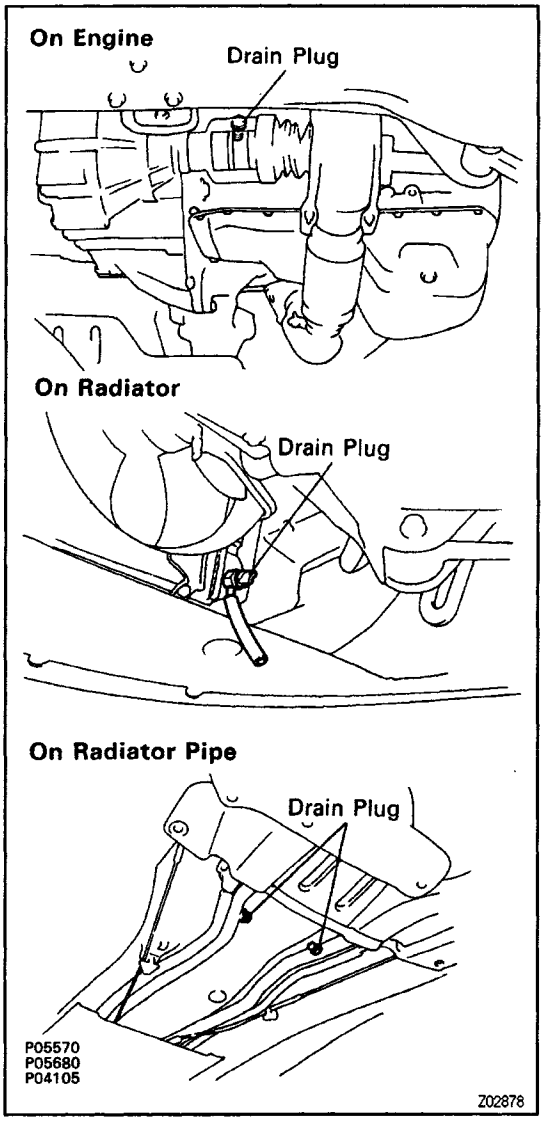

(c) Remove the drain cocks (engine, radiator and radiator pipes), and drain the coolant.

(d) Close the drain plugs.

Torque:

25 N–m (250 kgf–cm, 18 ft–lbf) for engine

17 N–m (170 kgf–cm, 12 ft–lbf) for radiator pipes

EG197–01

ENGINE COOLANT REFILL

1. REMOVE SPARE TIRE

2. REMOVE DASH PANEL FRONT TRIM COVER

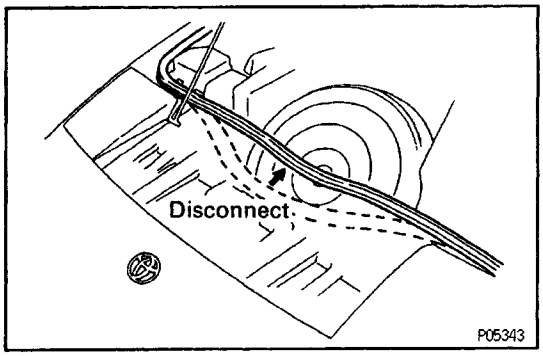

3. REMOVE UPPER RADIATOR SUPPORT SEAL

(a) Disconnect the hood weatherstrip.

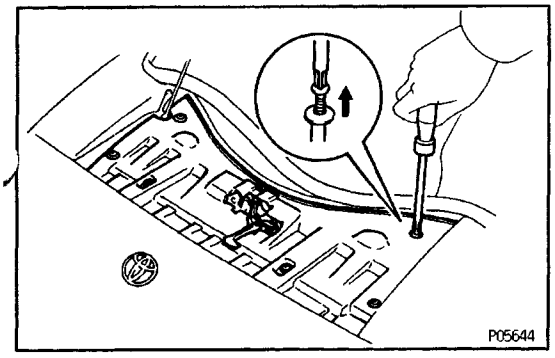

(b) Remove the seven clips.

(c) Remove the two hood lock mounting bolts, and remove the support seal.

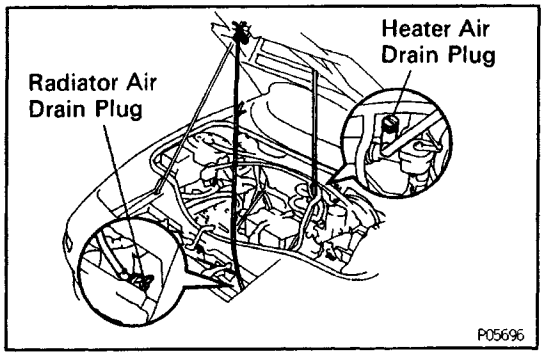

4. SET SERVICE HOSES

(a) Connect the service hoses to the air drain plugs of the radiator and heater water valve.

(b) Suspend the opposite ends the front hood as shown in the illustration.

NOTICE: Do not close–off or pinch any of the service hoses.

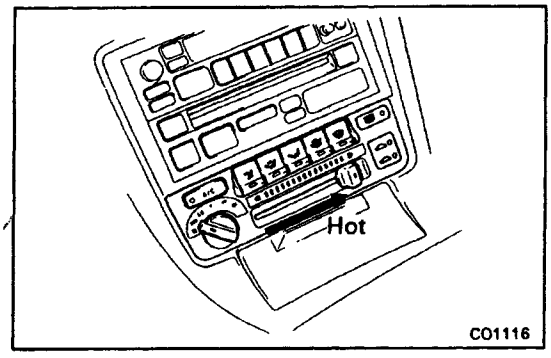

5. FILL ENGINE COOLANT

(a) Set the heater control lever to hot.

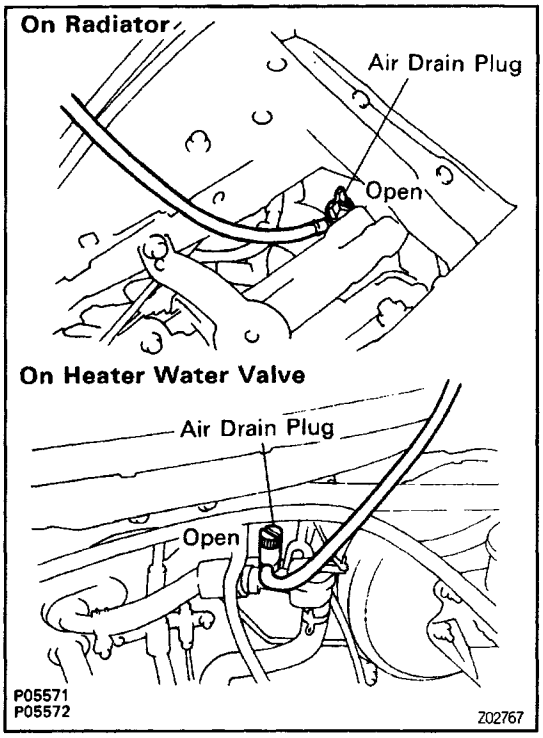

(b) Open the air drain plugs of the radiator or heater water valve above three turns.

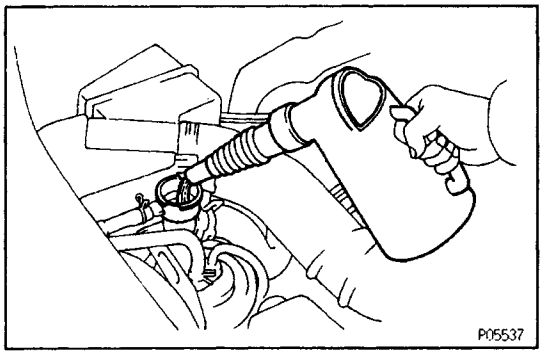

(c) Slowly fill the system with coolant.

- Use a good brand of ethylene–glycol base coo–lant and mix it according to the manufacturer's directions.
- Using coolant which includes more than 50 % ethylene–glycol (but not more than 70 %) is recommended.

NOTICE:

- **Do not use a alcohol type coolant.**
- **The coolant should be mixed with dernineralized water or distilled water.**

Capacity (w/ Heater):

13.0 liters (13.7 US qts, 11.4 Imp.qts)

(d) Check that air is absent from the air drain plugs of the radiator and heater water valve while filling the water filler inlet to the top with coolant.

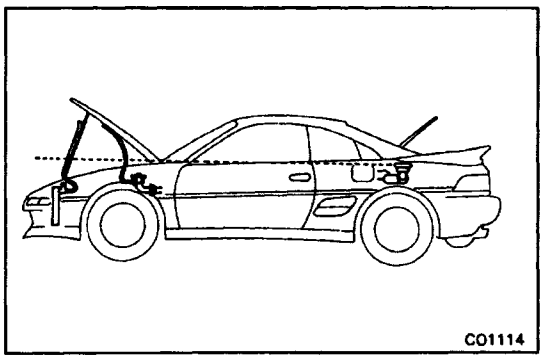

(e) Visually check that the level of coolant in the air drain service hoses of the radiator and heater water valve are the same as in the water filler.

NOTICE: If the water level of coolant in the air drain service hose is clearly, air removal has been incomplete, so check if the service hose is crushed or bent, them perform step (e).

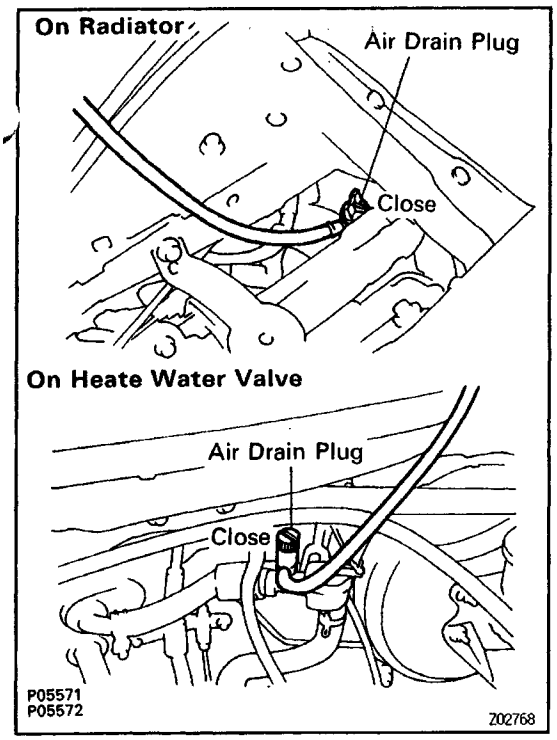

(f) When the coolant level in the air drain service hoses stops dropping, close the air drain plugs of the radiator and heater water valve.

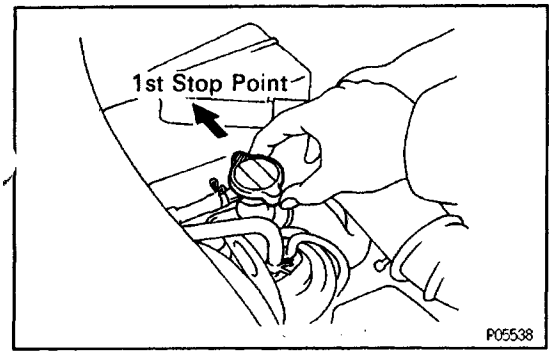

(g) Fasten the radiator (water filler) cap to the 1st stop point.

NOTICE: Do not tighten the radiator cap completely (to the 2nd stop point).

(h) Start the engine, and run at idle for approx. 3 minutes, and stop the engine.

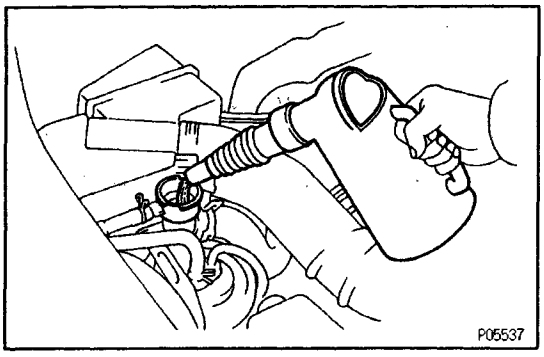

(i) Add more coolant, and repeat steps (h) and (i).

HINT: By performing steps (h) and (i), 0.2 – 0.5 liters (0.2 – 0.5 US qts, 0.2 – 0.4 Imp. qts) can normally be added.

(j) Check that coolant level in the water filler has not dropped.

If the coolant level has dropped, add coolant and repeat the steps from (g) onward.

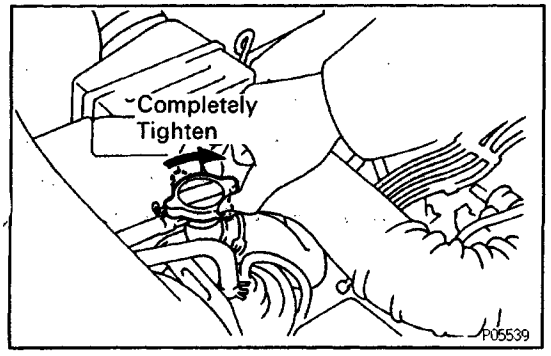

(k) Completely tighten the radiator (water filler) cap.

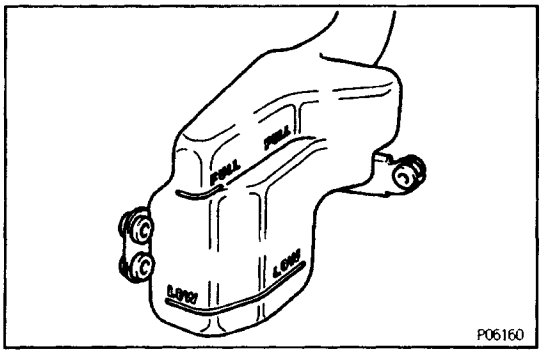

(l) Fill coolant into the reservoir tank up to the ”FULL” line.
(m) Check coolant for leaks.

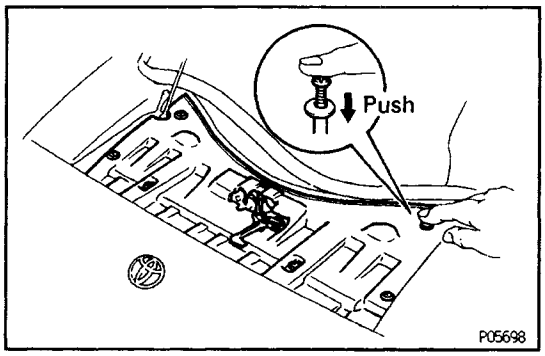

6. INSTALL UPPER RADIATOR SUPPORT SEAL

(a) Temporarily install the hood lock with the RH side bolt.
(b) Place the support seal in position.
(c) Install the hood lock with the two bolts.
(d) Install the seven clips.

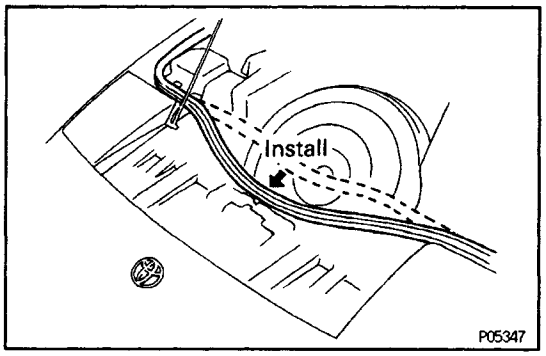

(e) Install the hood weatherstrip.

7. REINSTALL SPARE TIRE
8. REINSTALL DASH PANEL FRONT TRIM COVER
9. REINSTALL REAR FUEL TANK PROTECTOR

COOLING SYSTEM

DESCRIPTION

This engine utilizes a pressurized forced circulation cooling system which includes a thermostat equipped with a by–pass valve mounted on the inlet side.

OPERATION

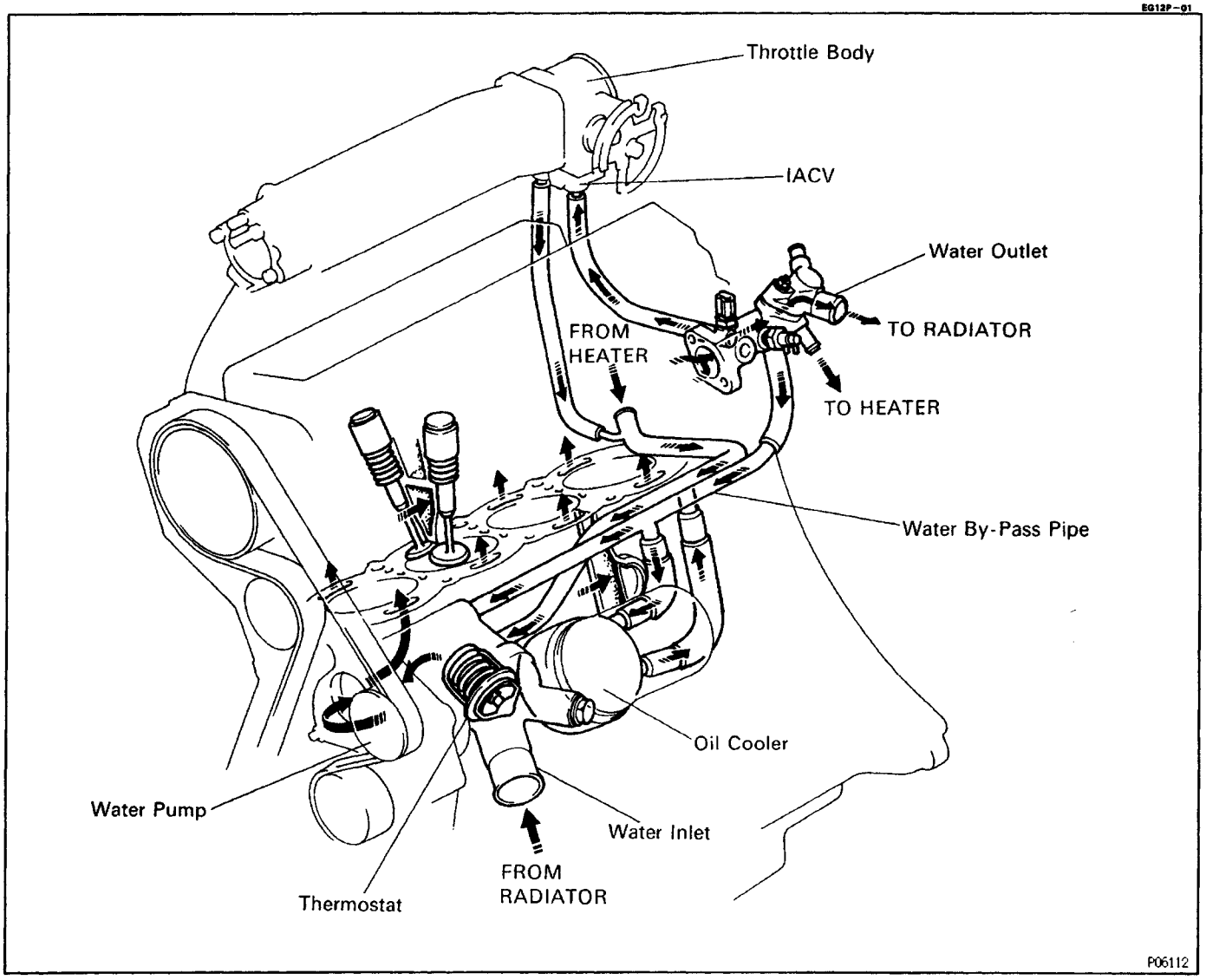

The cooling system is composed of the water jacket (inside the cylinder block and cylinder head), radiator, water pump, thermostat, electric fan, hoses and other components.

Coolant which is heated in the water jacket is pumped to the radiator, through which and electric fan blows air to cool the coolant as it passes through. Coolant which has been cooled is then sent back to the engine by the water pump, where it cools the engine.

The water jacket is a network of channels in the shell of the cylinder block and cylinder head through which coolant passes. It is designed to provide adequate cooling of the cylinders and combustion chambers which become heated during engine operation.

COOLING SYSTEM

DESCRIPTION

This engine utilizes a pressurized forced circulation cooling system which includes a thermostat equipped with a by–pass valve mounted on the inlet side.

OPERATION

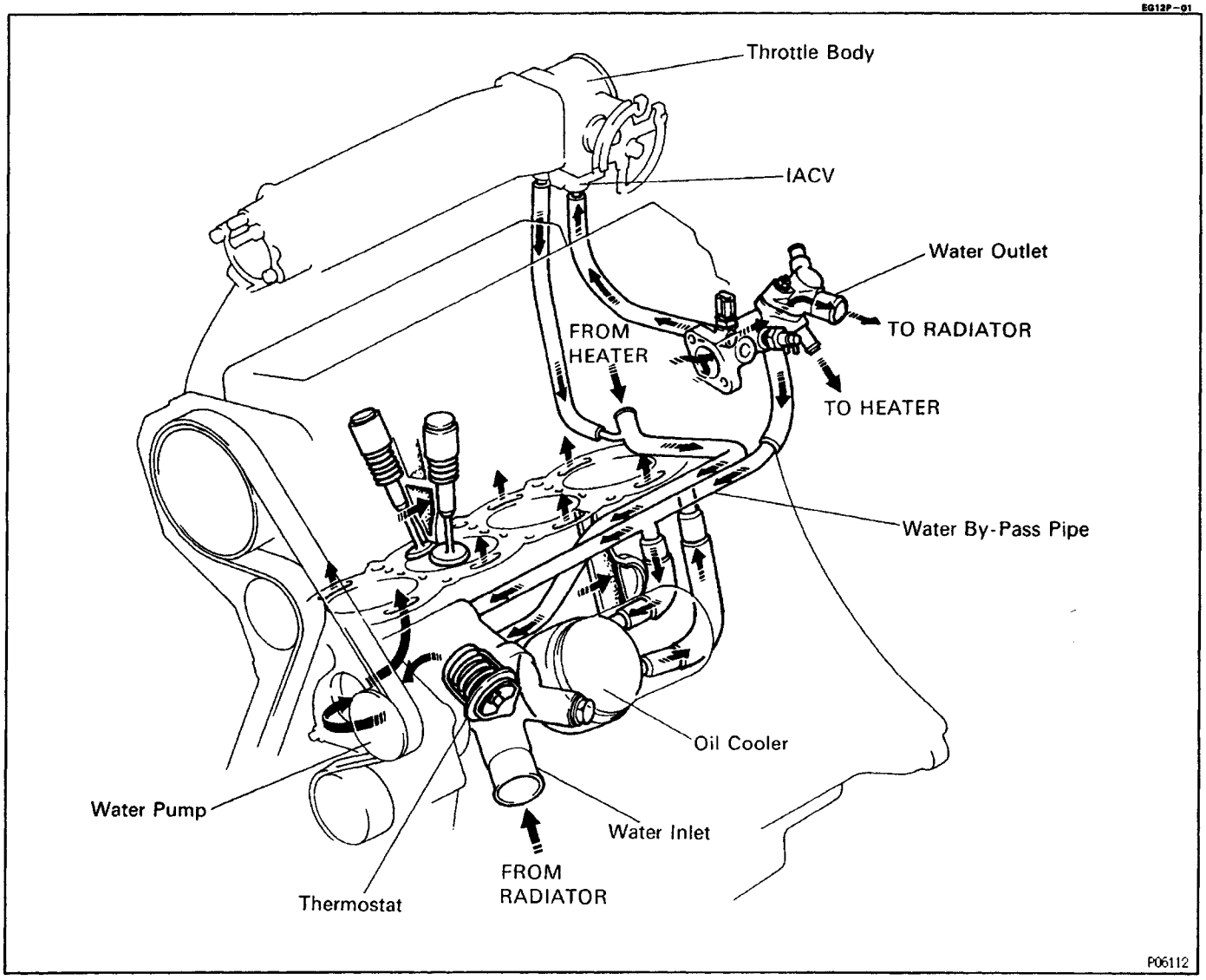

The cooling system is composed of the water jacket (inside the cylinder block and cylinder head), radiator, water pump, thermostat, electric fan, hoses and other components.

Coolant which is heated in the water jacket is pumped to the radiator, through which and electric fan blows air to cool the coolant as it passes through. Coolant which has been cooled is then sent back to the engine by the water pump, where it cools the engine.

The water jacket is a network of channels in the shell of the cylinder block and cylinder head through which coolant passes. It is designed to provide adequate cooling of the cylinders and combustion chambers which become heated during engine operation.

RADIATOR

The radiator cools the coolant which has passed through the water jacket and become hot, and it is mounted in the front of the vehicle. The MR2 radiator is different from that in other models, in that it is a cross flow type in which the coolant flows horizontally. It includes side tanks and a core which connects them. The inlet for coolant from the water jacket and the drain cock for draining out coolant are located in the left tank. The outlet coolant and an air drain, which facilitates the supply of coolant to the engine are located in the right tank. The core contains many tubes through which coolant flows from left tank to the right tank as well as cooling fins which radiate heat away from the coolant in the tubes. Air sucked in by the electric cooling fan, as well as the wind generated by the vehicle's travel, passes through the radiator, cooling the coolant heated by the water jacket as it passes through the tubes in the core. Models with automatic transmission include an automatic transmission. fluid cooler incorporated into the cooling pipes. A fan with an electric motor is mounted behind the radiator to assist the flow of air through the radiator. The fan operates when the coolant temperature becomes high in order to prevent it from becoming too high.

RADIATOR CAP

The radiator cap is a pressure type cap which seals the radiator, resulting in pressurization of the radiator as the coolant expands. The pressurization prevents the coolant from boiling even when the coolant temperature exceeds 100˚C (212˚F). A relief valve (pressurization valve) and a vacuum valve (negative pressure valve) are built into the radiator cap. The relief valve opens and lets steam escape through the overflow pipe when the pressure generated inside the cooling system exceeds the limit (coolant temperature: 110 – 120˚C (230 – 248˚ F), pressure; 59 – 103 kPa (0.60 – 1.05 kgf/cm^2, 8.5 – 14.9 psi). The vacuum valve opens to alleviate the vacuum which develops in the coolant system after the engine is stopped and the coolant temperature drops. The valve's opening allows the coolant in the reservoir tank to return to the cooling system.

RESERVOIR TANK

The reservoir tank is used to catch coolant which overflows the cooling system as a result of volumetric expansion when the coolant is heated. The coolant in the reservoir tank returns to the radiator when the coolant temperature drops, thus keeping the radiator full at all times and avoiding needless coolant loss.

Check the reservoir tank level to learn if the coolant needs to be replenished.

WATER PUMP

The water pump is used for forced circulation of coolant through the cooling system. It is mounted on the front of the cylinder block and driven by a timing belt.

THERMOSTAT

The thermostat has a wax type by–pass valve and is mounted in the water inlet housing. The thermostat includes a type of automatic valve operated by fluctuations in the coolant tempera–ture. This valve closes when the coolant temperature drops, preventing the circulation of coolant through the engine and thus permitting the engine to warm up rapidly. The valve opens when the coolant temperature has risen, allowing the circulation of coolant. Wax inside the thermostat expands when heated and contracts when cooled. Heating the wax thus generates pressure which overpowers the force of the spring which keeps the valve closed, thus opening the valve. When the wax cools, its contraction causes the force of the spring to take effect once more, closing the valve. The thermostat in this engine operates at a temperature of 82˚C (180˚ F).

PREPARATION

EG128–01

SST (SPECIAL SERVICE TOOLS)

	09228–06500 Oil Filter Wrench	

EG12V–01

RECOMMENDED TOOLS

	09082–00015 TOYOTA Electrical Tester	

EG12W–01

EQUIPMENT

Heater	
Radiator cap tester	
Thermometer	
Torque wrench	

EG12X–01

COOLANT

Item	Capacity	Classification
Engine coolant (w/ Heater)	13.0 liters (13.7 US qts, 11.4 Imp. qts)	Ethylene–glycol base

RADIATOR ELECTRIC COOLING FAN (Without AC)

EG07B–01

Part Location

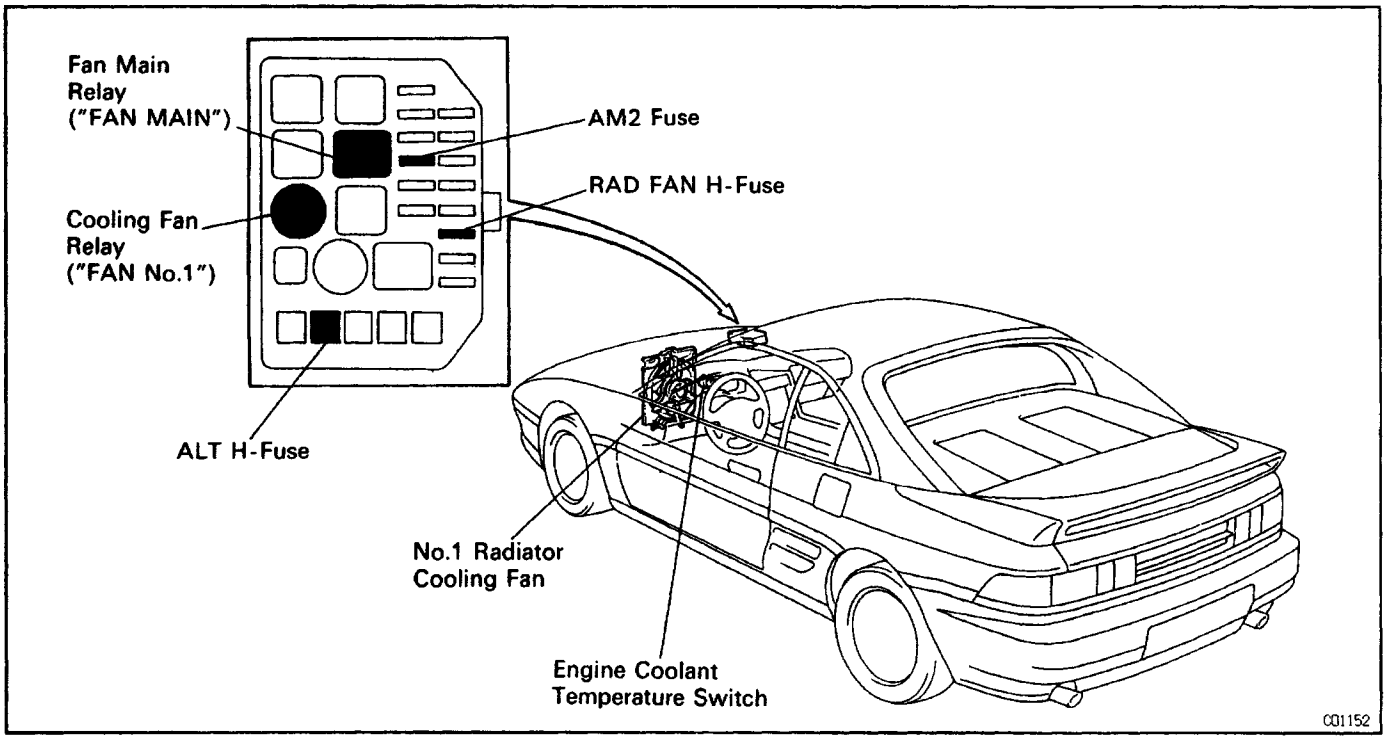

EG07C–07

System Circuit

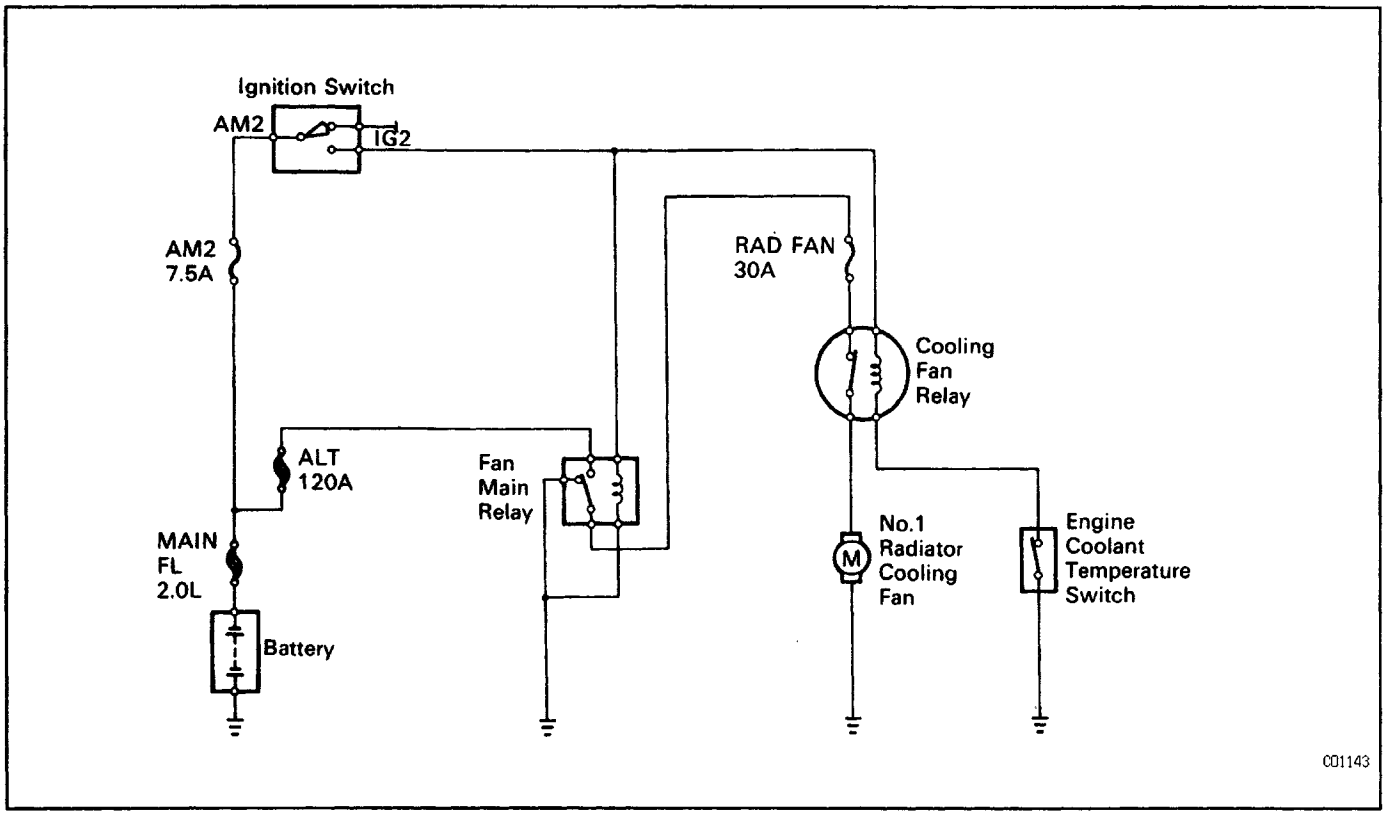

EG148–01

On–Vehicle Inspection

1. CHECK COOLING FAN OPERATION WITH LOW TEMPERATURE (Below 83°C (181°F))

(a) Turn the ignition switch ON.

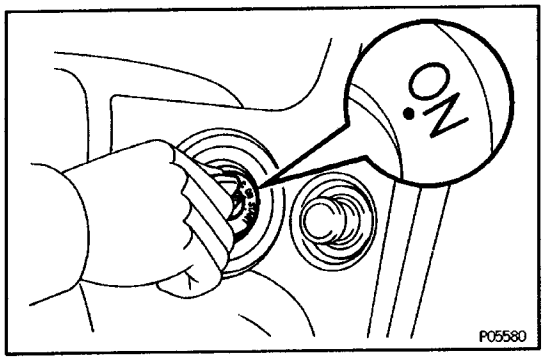

(b) Check that the cooling fan stops.

If not, check the cooling fan relay and engine coolant temperature switch, and check for a separated con–nector or severed wire between the cooling fan relay and engine coolant temperature switch.

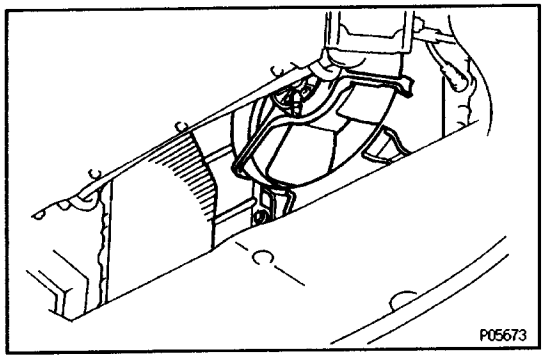

(c) Disconnect the engine coolant temperature switch.

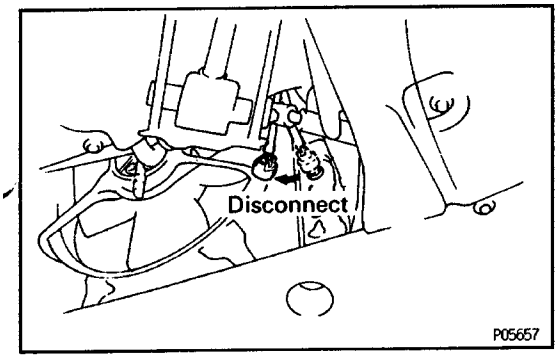

(d) Check that the cooling fan rotates.

If not, check the fan main relay, cooling fan relay, cooling fan, fuses, and check for short circuit between the cooling fan relay and engine coolant temperature switch.

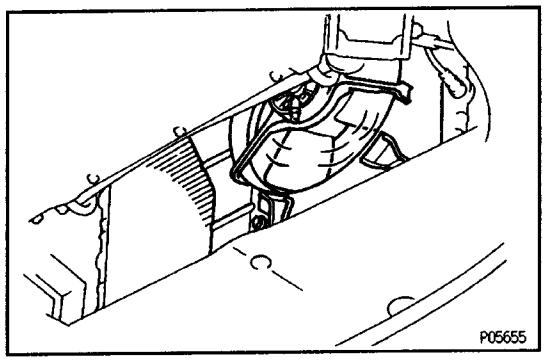

(e) Reconnect the engine coolant temperature switch.

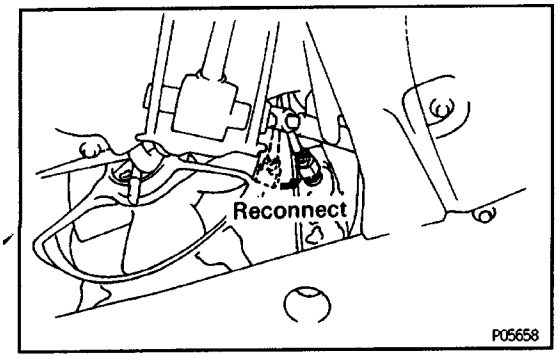

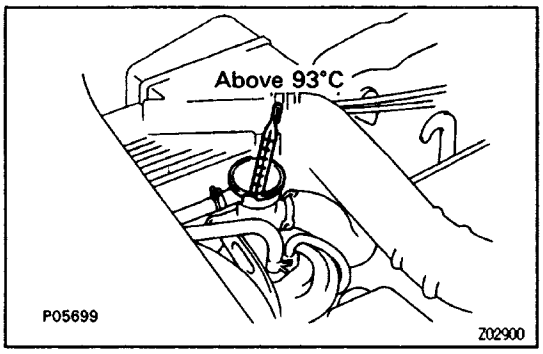

2. CHECK COOLING FAN OPERATION WITH HIGH TEMPERATURE (Above 93˚C (199˚F))

(a) Start the engine, and raise coolant temperature to above 93˚ C (199˚ F).

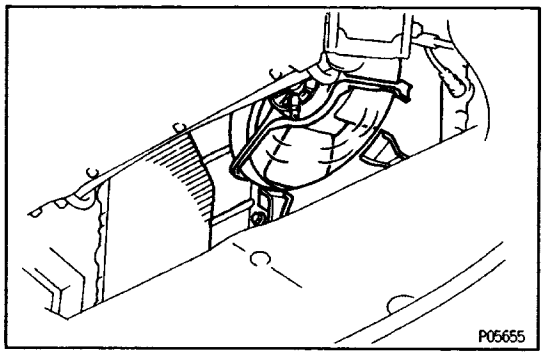

(b) Check that the cooling fan rotates.
If not, replace the engine coolant temperature switch.

EG149–01

NO.1 Cooling Fan
COMPONENTS FOR REMOVAL AND INSTALLATION

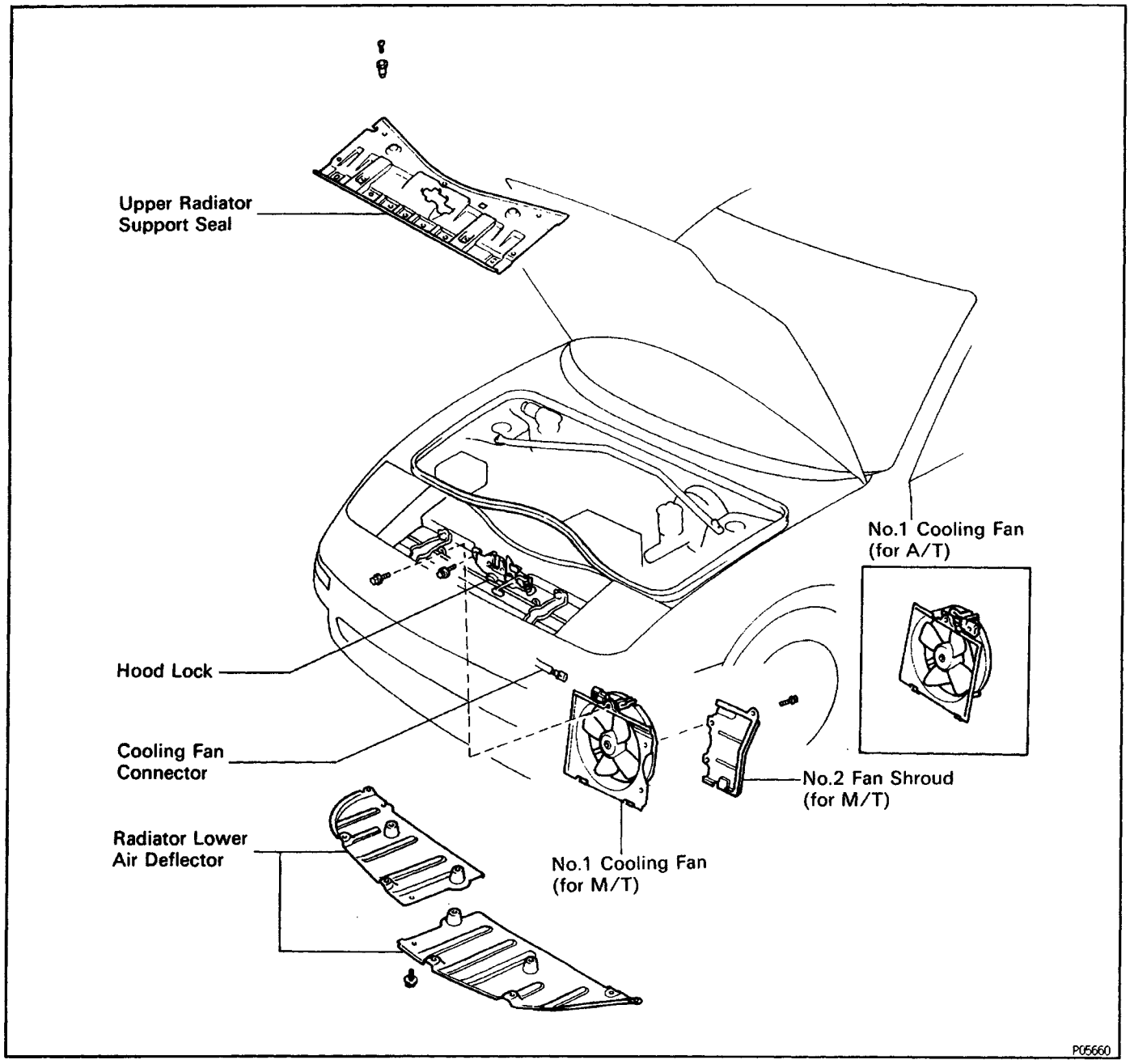

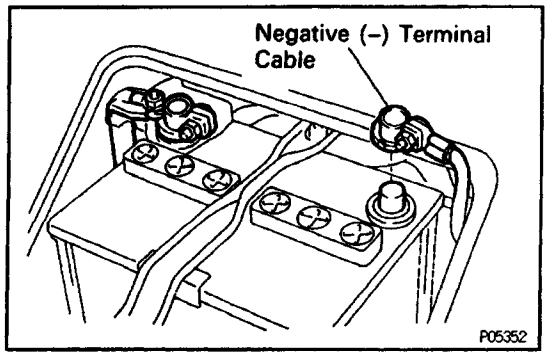

EG14A–01

NO.1 COOLING FAN INSPECTION

(See Components for Removal and Installation)

1. DISCONNECT CABE FROM NEGATIVE TERMINAL OF BATTERY

CAUTION: Turn the ignition switch to "LOCK". Disconnect the negative terminal from the battery. Wait at least 20 seconds before proceeding with work.

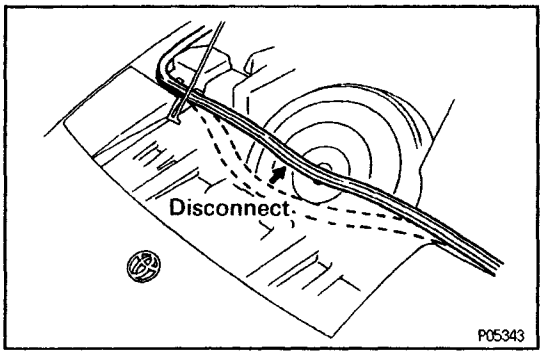

2. REMOVE UPPER RADIATOR SUPPORT SEAL

(a) Disconnect the hood weatherstrip.

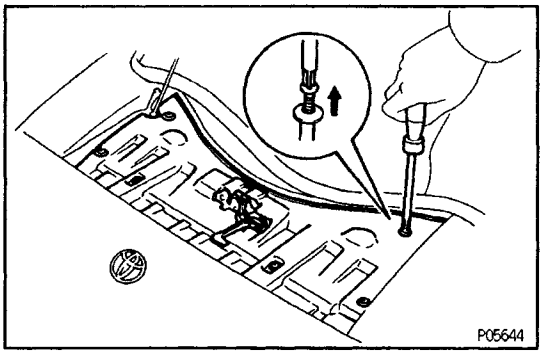

(b) Remove the clips.

(c) Remove the two hood lock mounting bolts, and remove the support seal.

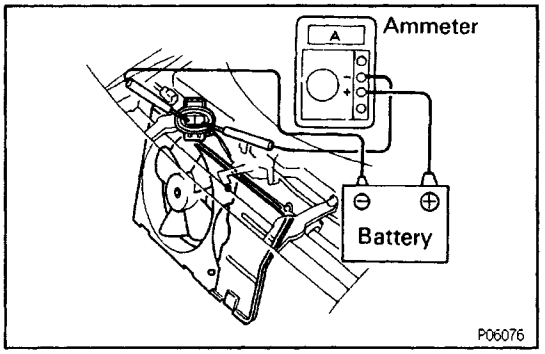

3. INSPECT NO.1 COOLING FAN

(a) Disconnect the fan connector.

(b) Connect battery and ammeter to the cooling fan connector.

(c) Check that the cooling fan rotates smoothly, and check the reading on the ammeter.

Standard amperage:

5.8 – 7.4 A for M/T

8.8 – 10.8 A for A/T

(d) Reconnect the fan connector.

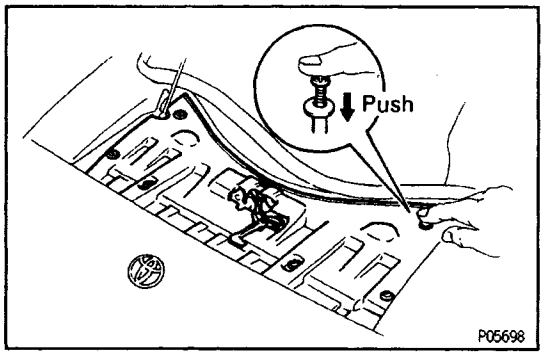

4. REINSTALL UPPER RADIATOR SUPPORT SEAL

(a) Temporarily install the hood lock with the RH side bolt.

(b) Place the support seal in position.

(c) Install the hood lock with the two bolts.

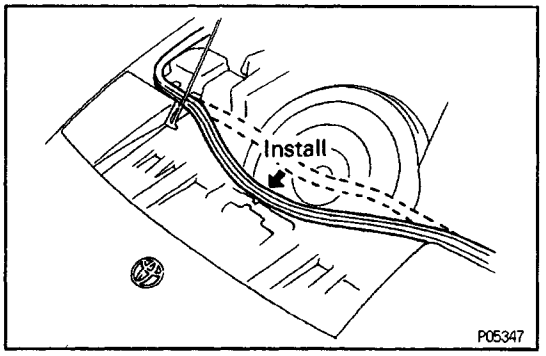

(d) Install the hood weatherstrip.

5. RECONNECT CABLE TO NEGATIVE TERMINAL OF BATTERY

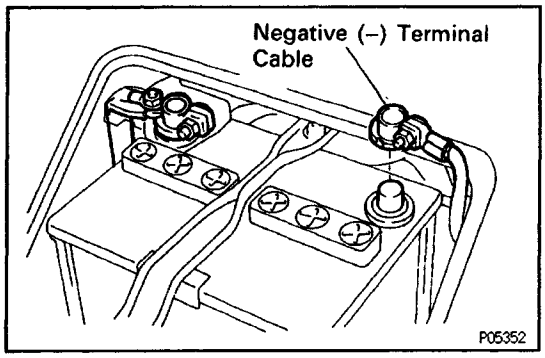

EG14C–01

NO.1 COOLING FAN REMOVAL

(See Components for Removal and Installation)

1. DISCONNECT CABE FROM NEGATIVE TERMINAL OF BATTERY

CAUTION: Turn the ignition switch to 'LOCK'. Disconnect the negative terminal from the battery. Wait at least 20 seconds before proceeding with work.

2. REMOVE RADIATOR LOWER AIR DEFLECTOR

3. REMOVE UPPER RADIATOR SUPPORT SEAL

(a) Disconnect the hood weatherstrip.

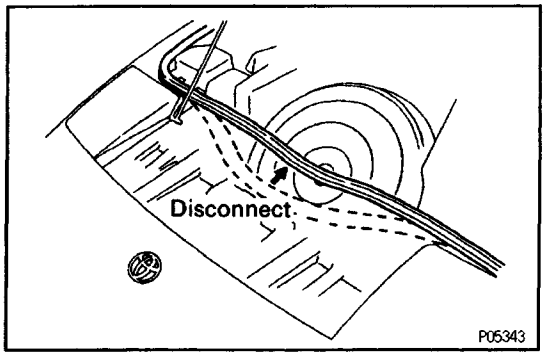

(b) Remove the clips.

(c) Remove the two hood lock mounting bolts, and remove the support seal.

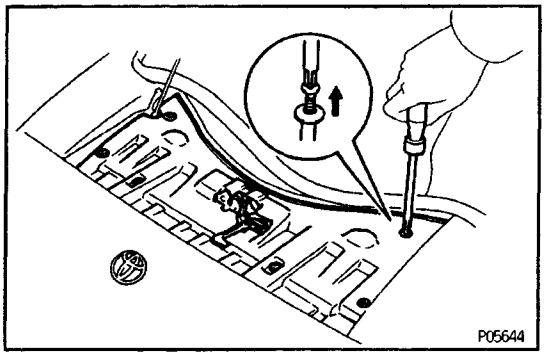

4. REMOVE NO.1 COOLING FAN

(a) Disconnect the cooling fan connector.

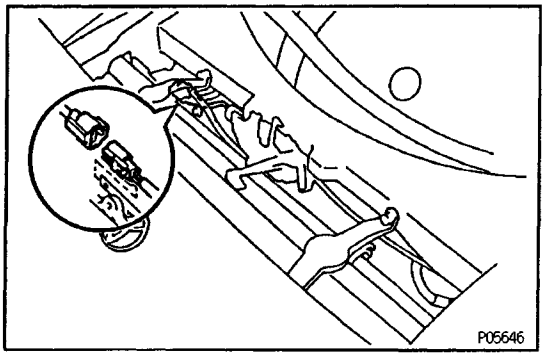

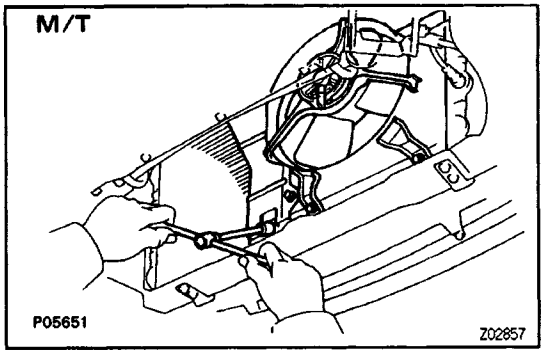

(b) (M/T)

Remove the five bolts and No.2 fan shroud. Remove the three bolts and No.1 cooling fan.

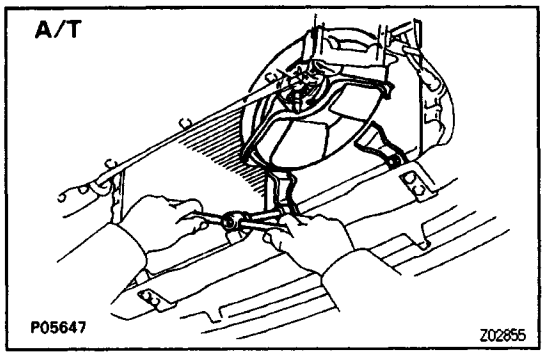

(c) (A/T)

Remove the three bolts and cooling fan.

COMPONENTS FOR DISASSEMBLY AND ASSEMBLY

(See Radiator Cooling Fens (w/ A/C))

NO.1 COOLING FAN DISASSEMBLY EG07J–03

(See Radiator Cooling Fans (w/ A/C))

NO.1 COOLING FAN ASSEMBLY EG14E–01

(See Radiator Cooling Fans (w/ A/C))

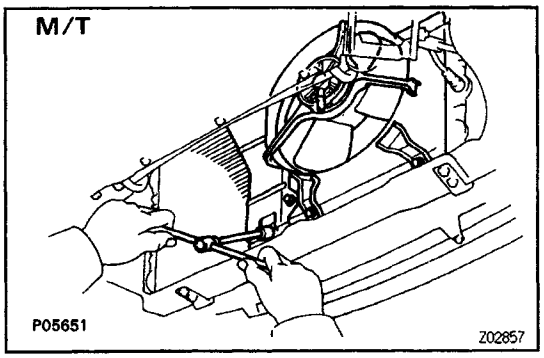

NO.1 COOLING FAN INSTALLATION

(See Components for Removal and Installation)

1. INSTALL NO.1 COOLING FAN

(a) (M /T)

Install the No. 1 cooling fan with the three bolts. Install the No.2 fan shroud with the five bolts.

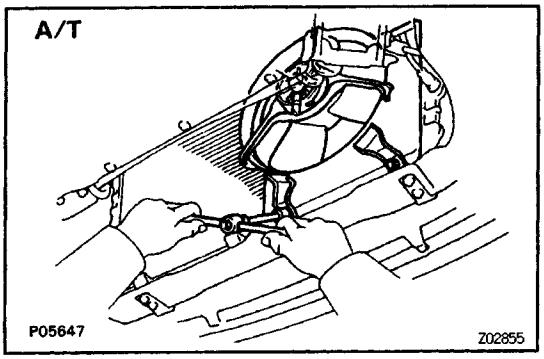

(b) (A/T)
Install the cooling fan with the three bolts.

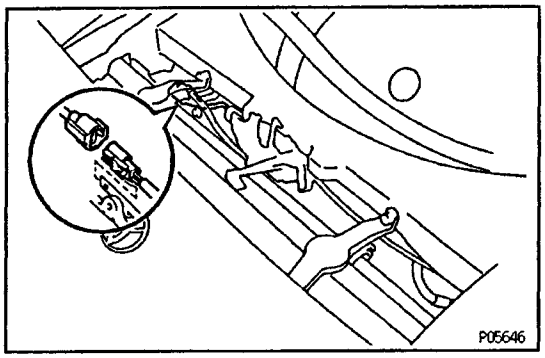

(c) Connect the cooling fan connector.

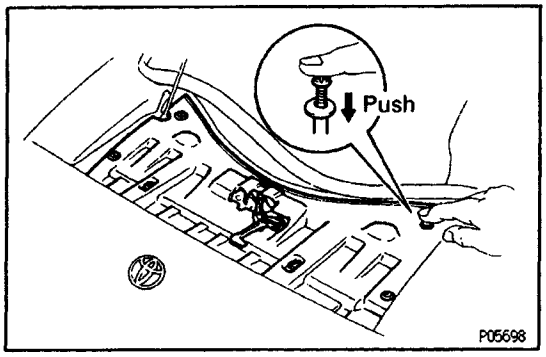

2. INSTALL UPPER RADIATOR SUPPORT SEAL

(a) Temporarily install the hood lock with the RH side bolt.
(b) Place the support seal in position.
(c) Install the hood lock with the two bolts.

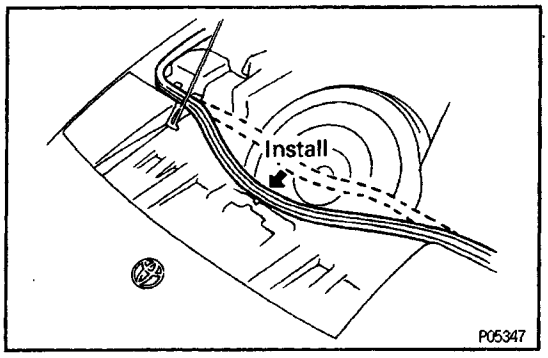

(d) Install the hood weatherstrip.

3. INSTALL RADIATOR LOWER AIR DEFLECTOR

4. CONNECT CABLE TO NEGATIVE TERMINAL OF BATTERY

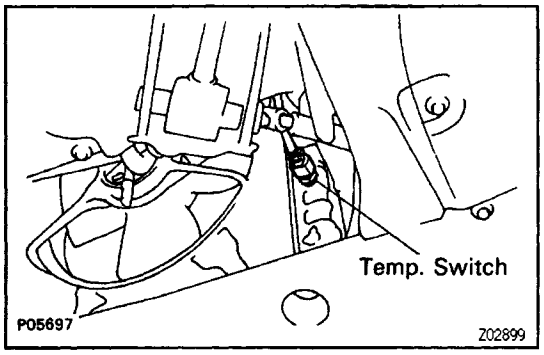

Engine Coolant Temperature Switch EG14J–01

ENGINE COOLANT TEMPERATURE SWITCH INSPECTION

1. DRAIN ENGINE COOLANT

2. REMOVE ENGINE COOLANT TEMPERATURE SWITCH

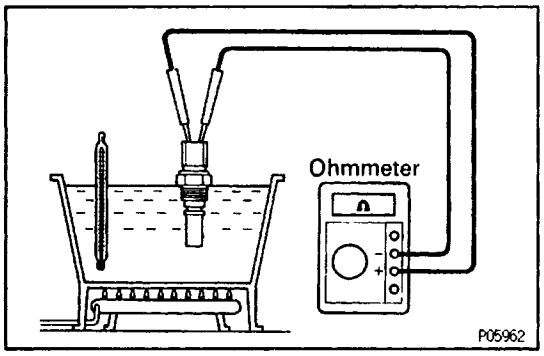

3. INSPECT ENGINE COOLANT TEMPERATURE SWITCH

(a) Using an ohmmeter, check that there is no continuity between the terminals when the coolant temperature is above 93˚C (199˚F).

(b) Using an ohmmeter, check that there is continuity between the terminals when the coolant temperature is below 83˚C (181˚F).

If continuity is not as specified, replace the switch.

4. REINSTALL ENGINE COOLANT TEMPERATURE SWITCH

5. REFILL WITH ENGINE COOLANT

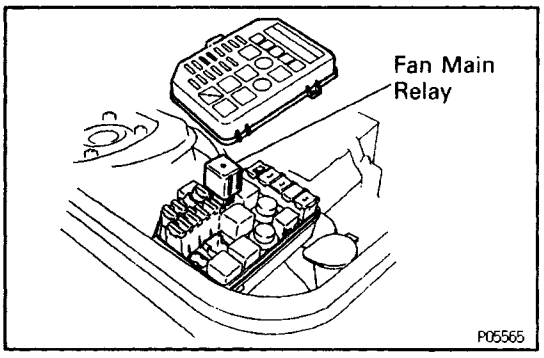

Fan Main Relay (”FAN MAIN”) EG14K–01

FAN MAIN RELAY INSPECTION

(See Radiator Cooling Fans (w/ A/C))

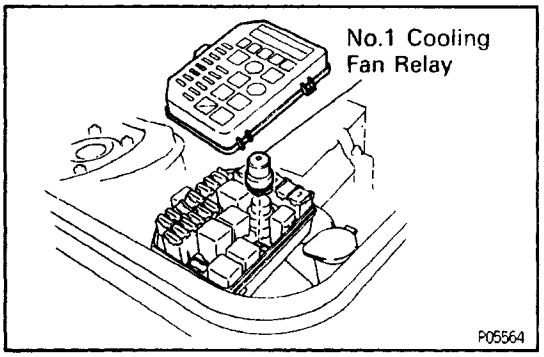

No.1 Cooling Fan Relay (”FAN N0.1”) EG14L–01

No.7 COOLING FAN RELAY INSPECTION

(See Radiator Cooling Fans (w/ A/C))

RADIATOR ELECTRIC COOLING FAN (With AC)

EG07B–08

Parts Location

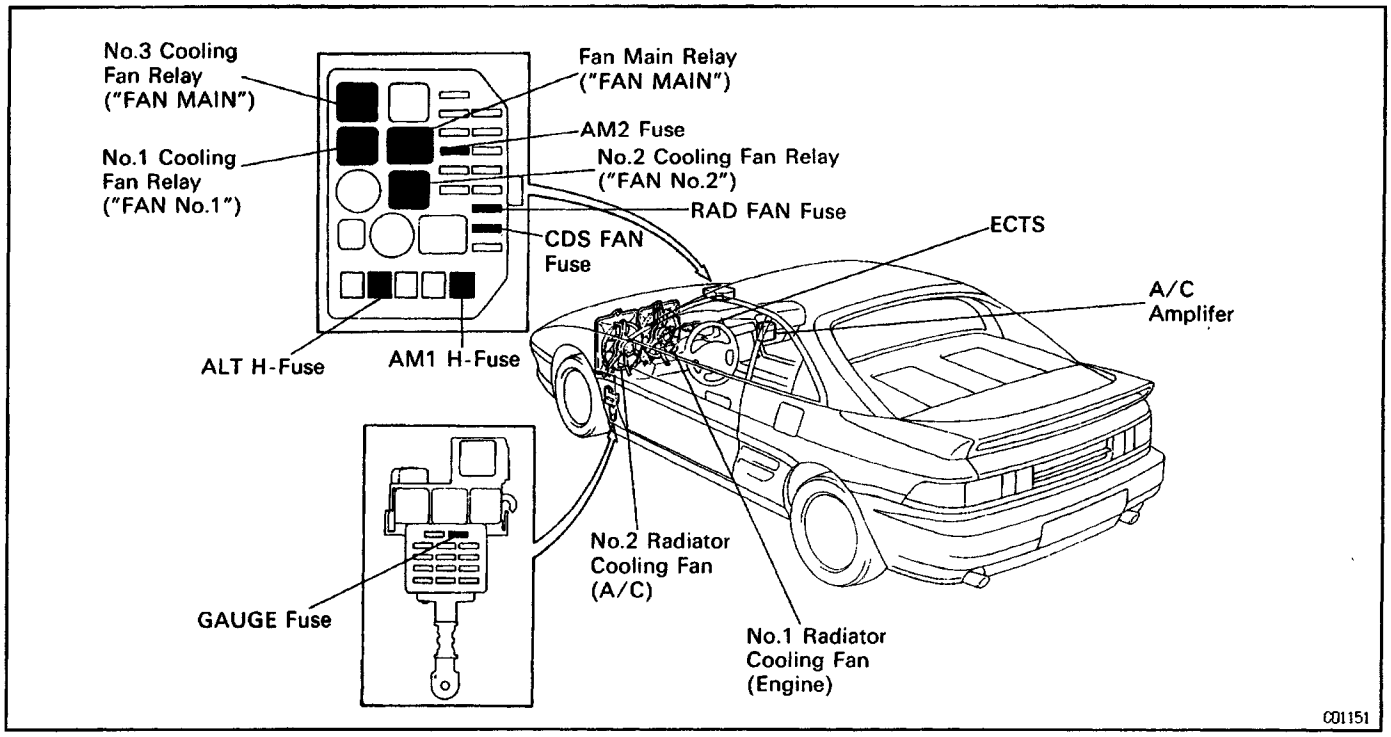

EG07C–06

System Circuit

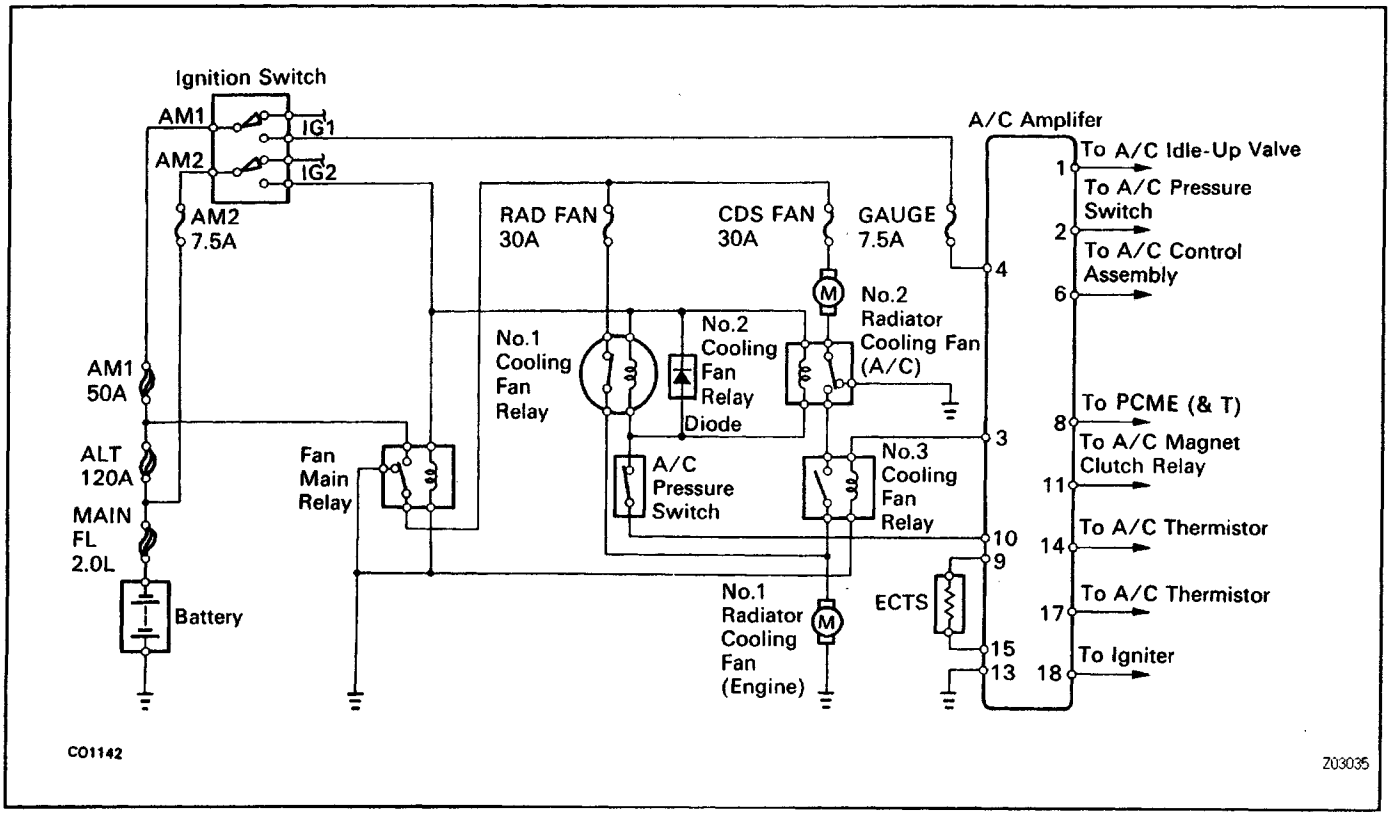

EG13T–01

On–Vehicle Inspection

1. INSPECT COOLING FAN OPERATION AT LOW TEMPERATURE (Below 85˚C (185˚F))

(a) Turn the ignition switch ON.

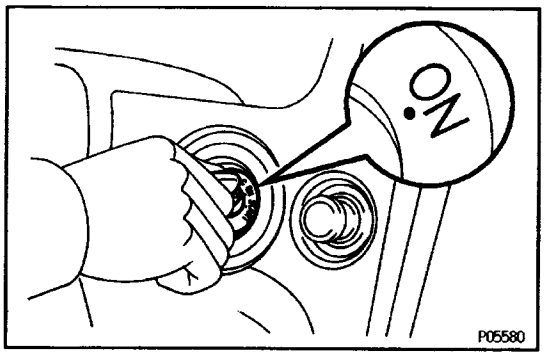

(b) Check that the cooling fans stops.
If not, check the cooling fan relays and ECTS, and check for a separated connector or severed wire between the cooling fan relay and ECTS.

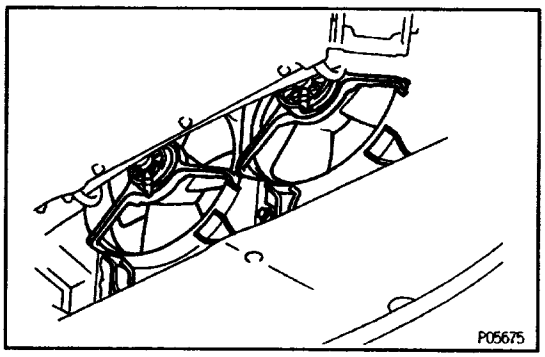

(c) Disconnect the ECTS connector.

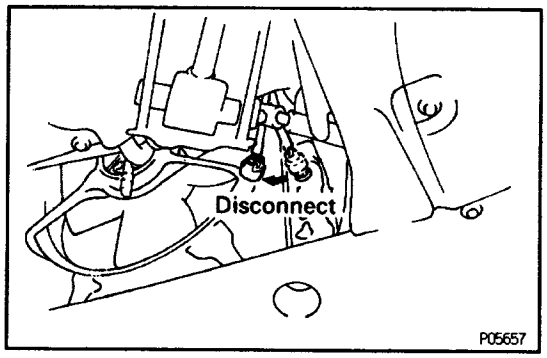

(d) Check that the cooling fans rotates.
If not, check the fuses, fan main relay, cooling fan relays, A/C amplifier, cooling fan, and check for a short circuit between the cooling fan relay and ECTS.

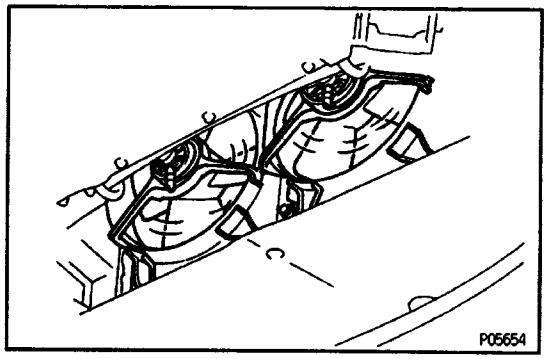

(e) Reconnect the ECTS connector.

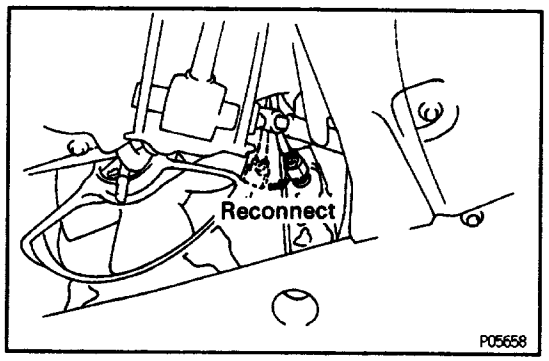

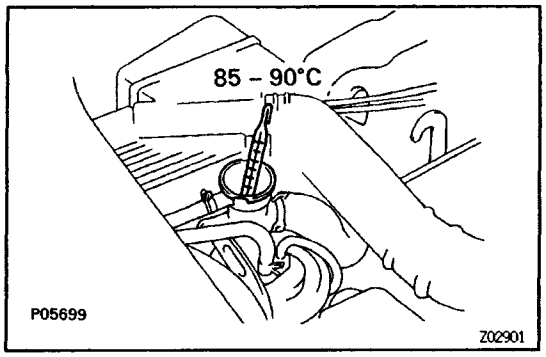

2. INSPECT COOLING FAN OPERATION AT HIGH TEMPERATURE (85 – 90˚C (185 – 194˚F))

(a) Start the engine, and raise coolant temperature to 85 – 90˚ C (185 – 194˚ F).

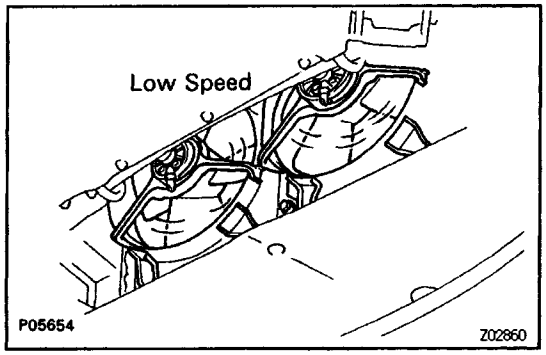

(b) Check that the cooling fans rotates at low speed.
If not, replace the ECTS.

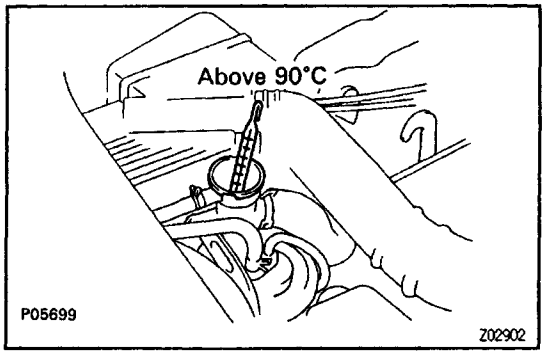

3. INSPECT COOLING FAN OPERATION AT HIGH TEMPERATURE (Above 90˚C (194˚F))

(a) Start the engine, and raise coolant temperature to above 90˚C (194˚ F).

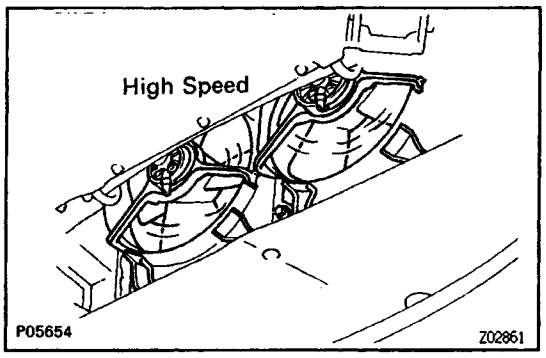

(b) Check that the cooling fans rotates at high speed.
If not, replace the ECTS.

EG078–09

Cooling Fans
COMPONENTS FOR REMOVAL AND INSTALLATION

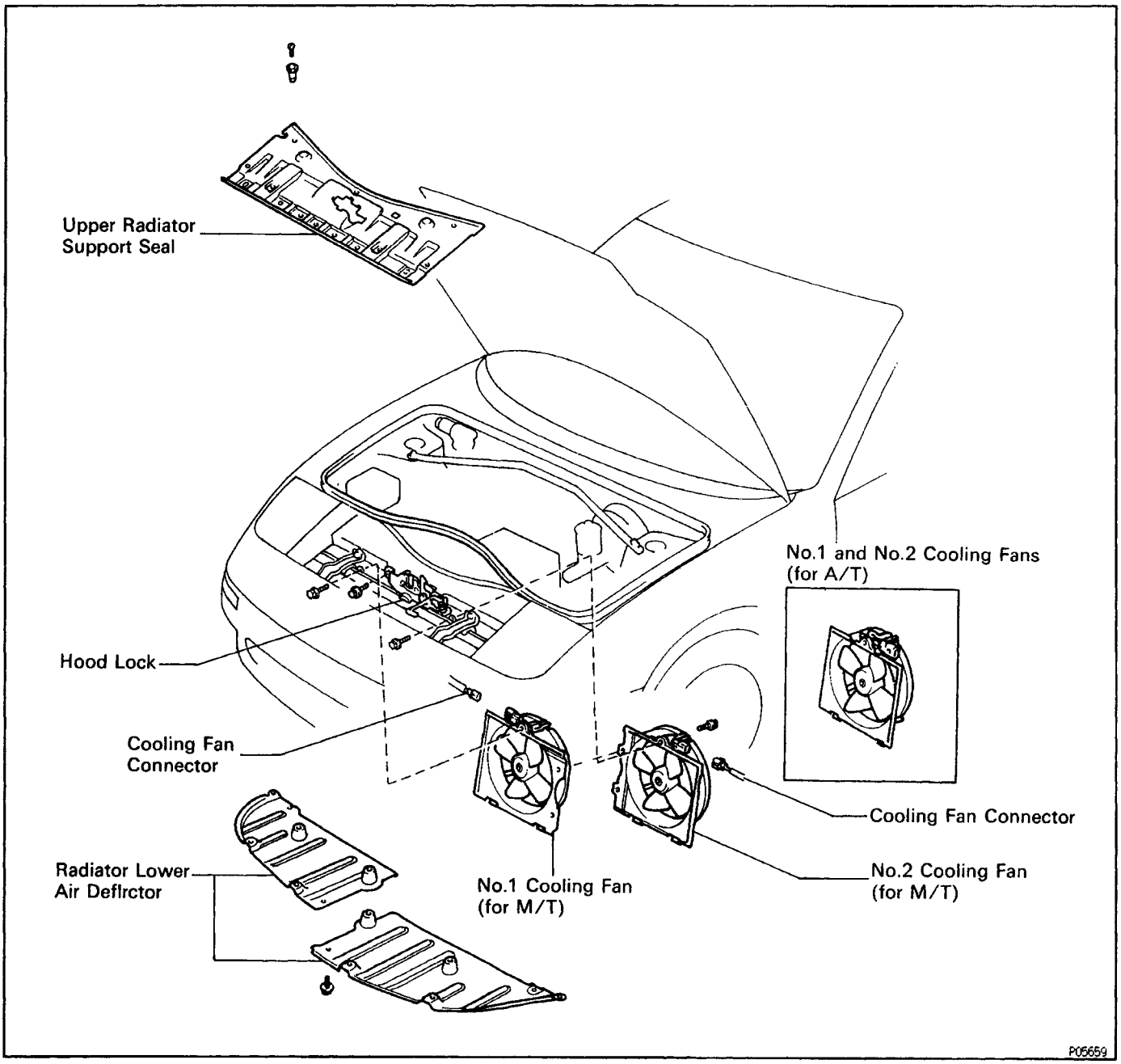

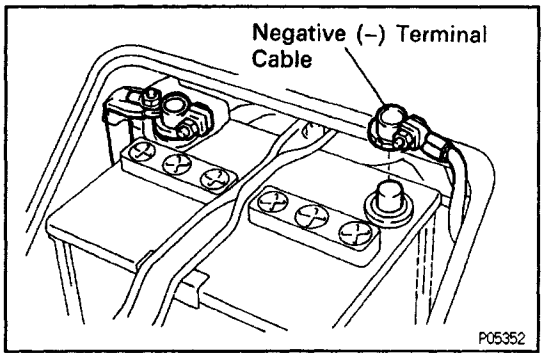

EG13U–01

COOLING FANS INSPECTION

(See Components for Removal and Installation)

1. DISCONNECT CABE FROM NEGATIVE TERMINAL OF BATTERY

CAUTION: Turn the ignition switch to ”LOCK”. Disconnect the negative terminal from the battery. Wait at least 20 seconds before proceeding with work.

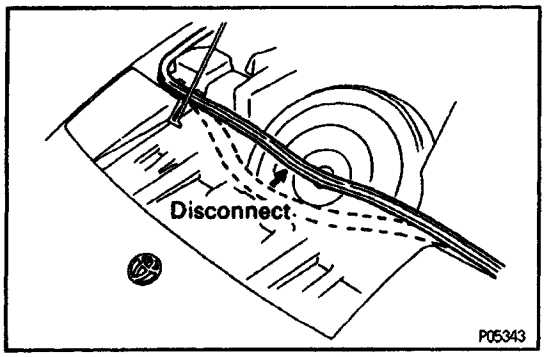

2. REMOVE UPPER RADIATOR SUPPORT SEAL

(a) Disconnect the hood weatherstrip.

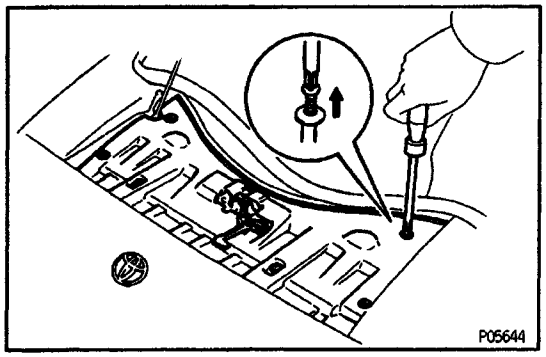

(b) Remove the clips.

(c) Remove the two hood lock mounting bolts, and remove the support seal.

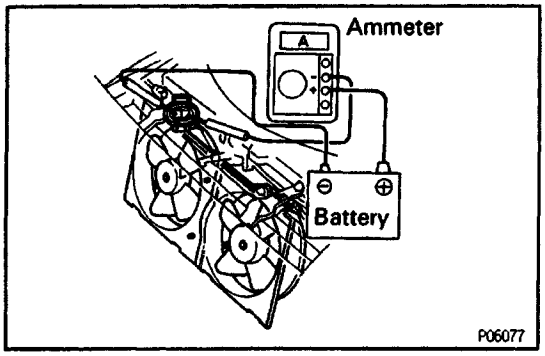

3. INSPECT COOLING FANS

(a) Disconnect the two cooling fan connectors.

(b) Connect battery and ammeter to the cooling fan connector.

(c) Check that the cooling fan rotates smoothly, and check the reading on the ammeter.

Standard amperage:

5.8 – 7.4 A for M/T

8.8 – 10.8 A for A/T

(d) Reconnect the two cooling fan connectors.

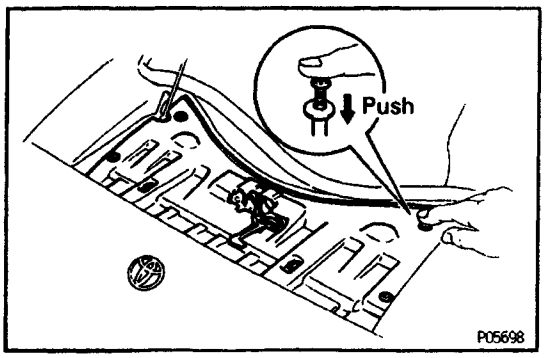

4. REINSTALL UPPER RADIATOR SUPPORT SEAL

(a) Temporarily install the hood lock with the RH side bolt.

(b) Place the support seal in position.

(c) Install the hood lock with the two bolts.

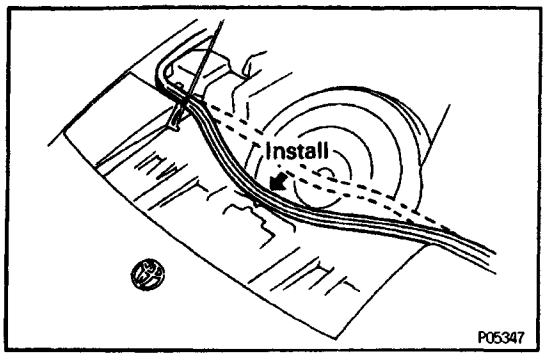

(d) Install the hood weatherstrip.

5. RECONNECT CABE TO NEGATIVE TERMINAL OF BATTERY

EG13V–01

COOLING FANS REMOVAL

(See Components for Removal and Installation)

1. DISCONNECT CABE FROM NEGATIVE TERMINAL OF BATTERY

CAUTION: Turn the ignition switch to "LOCK". Disconnect the negative terminal from the battery. Wait at least 20 seconds before proceeding with work.

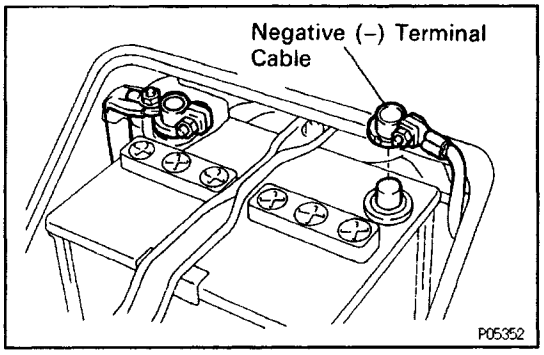

2. REMOVE RADIATOR LOWER AIR DEFLECTOR

3. REMOVE UPPER RADIATOR SUPPORT SEAL

(a) Disconnect the hood weatherstrip.

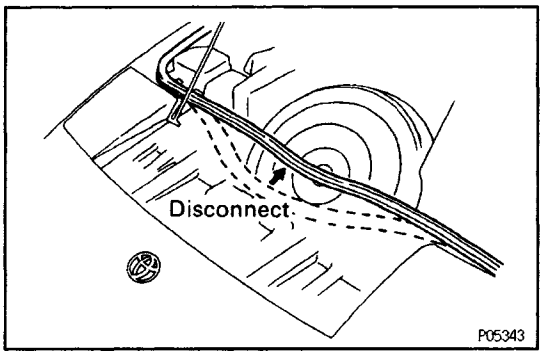

(b) Remove the seven clips.

(c) Remove the two hood lock mounting bolts, and remove the support seal.

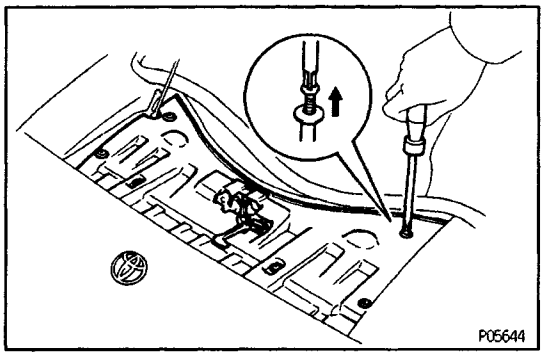

4. REMOVE COOLING FANS

(a) Disconnect the two cooling fan connectors.

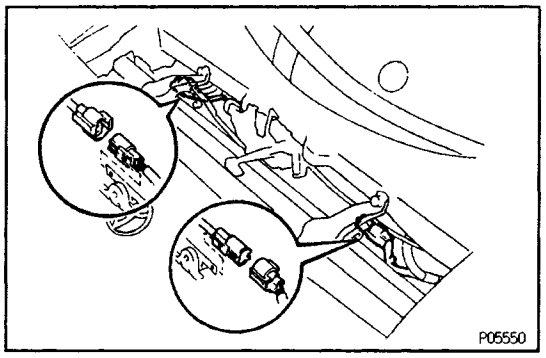

(b) (M /T)

Remove the five bolts and No.2 cooling fan. Remove the three bolts and No.1 cooling fan.

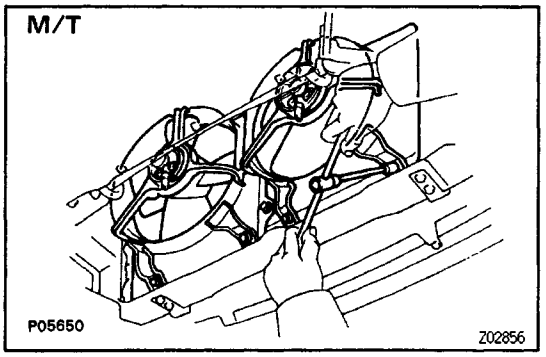

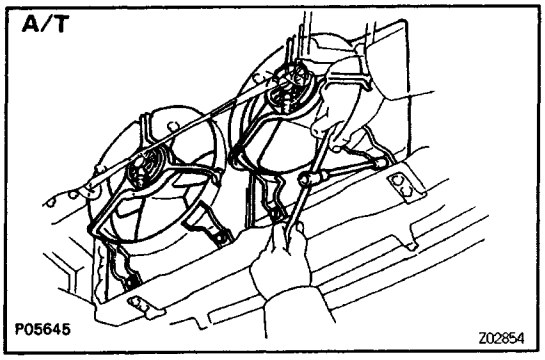

(c) (A/T)
Remove the three bolts and cooling fan. Remove the two cooling fans.

COMPONENTS FOR DISASSEMBLY AND ASSEMBLY

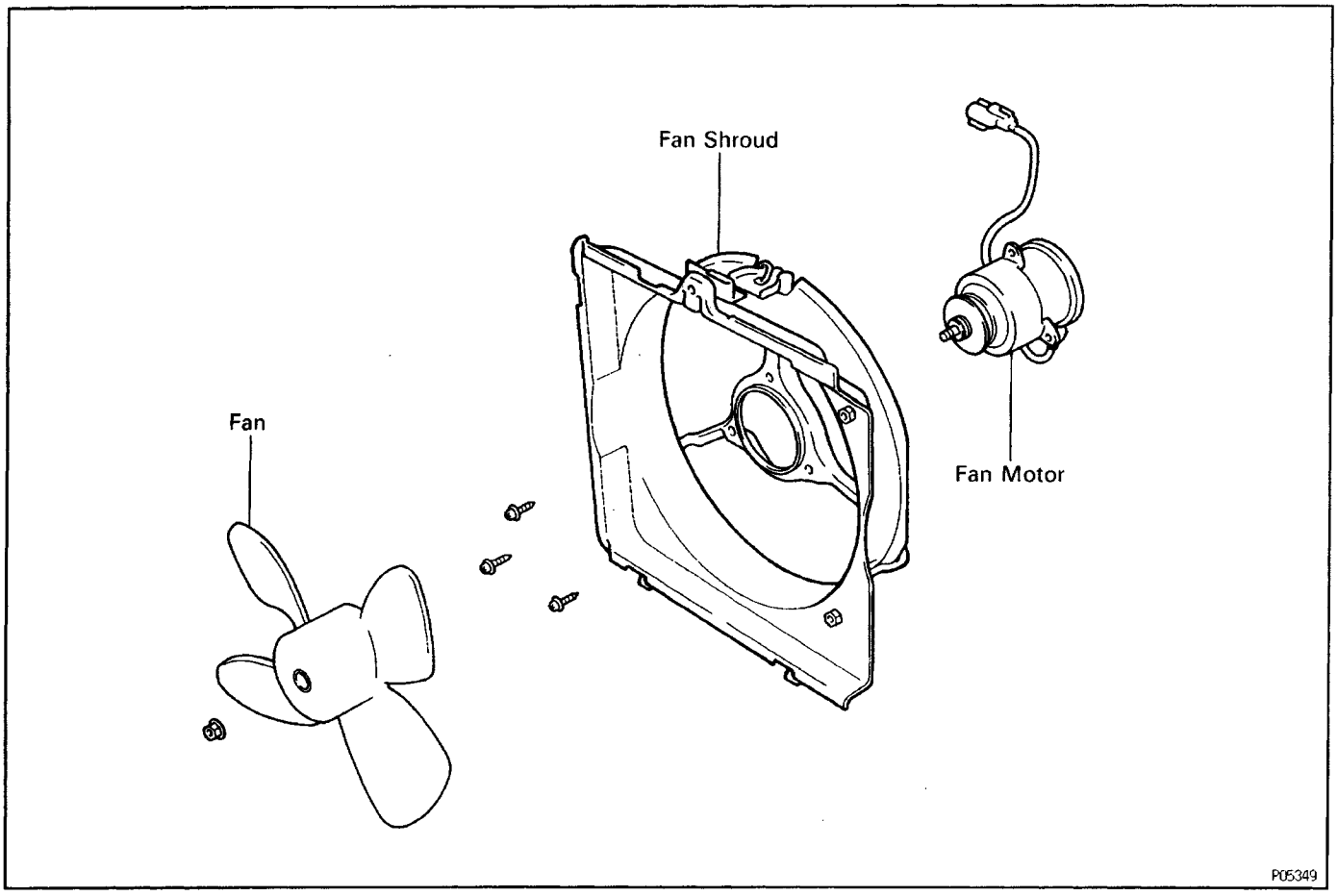

EG13X–01

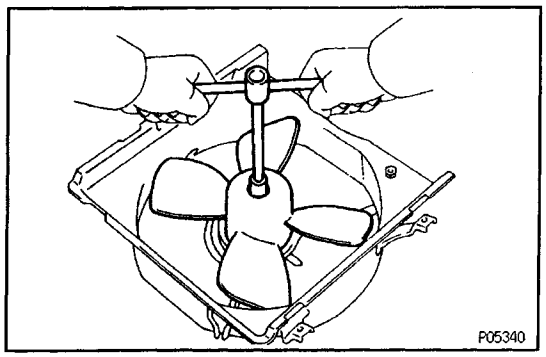

COOLING FAN DISASSEMBLY

(See Components for Disassembly and Assembly)

1. REMOVE FAN

Remove the nut and fan.

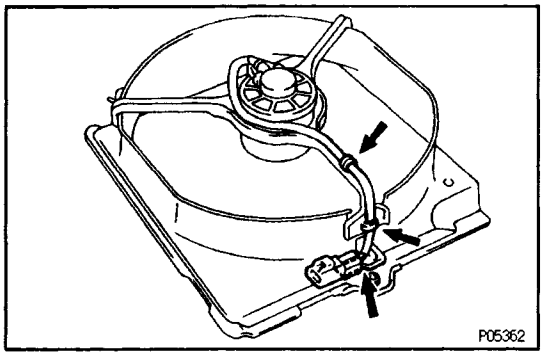

2. REMOVE FAN MOTOR

(a) Disconnect the wire and connector from the fan shroud.

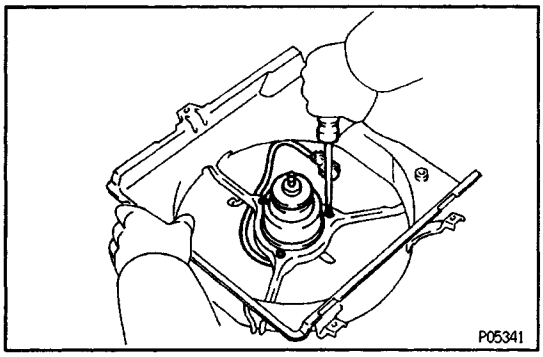

(b) Remove the three screws and fan motor.

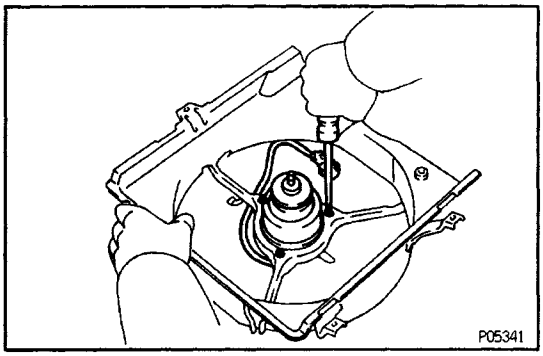

COOLING FAN ASSEMBLY

(See Components for Disassembly and Assembly)

1. INSTALL FAN MOTOR

(a) Install the fan motor with the nut.

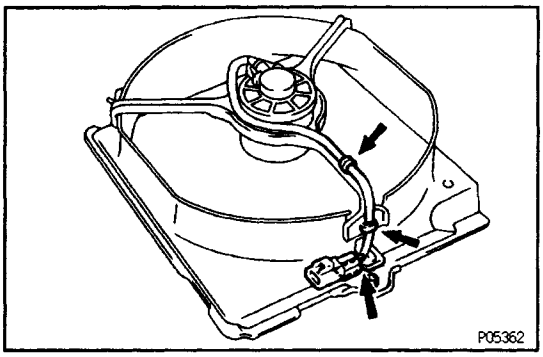

(b) Install the wire and connector to the fan shroud.

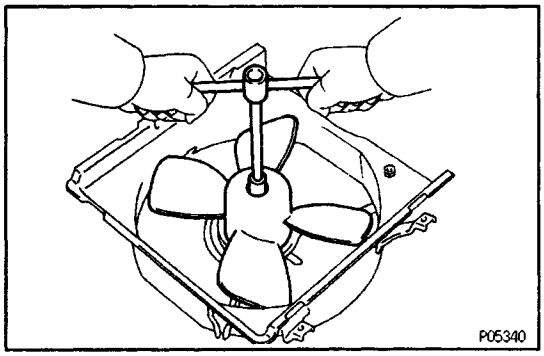

2. INSTALL FAN

Install the fan with the nut.

EG13Z–01

COOLING FANS INSTALLATION

(See Components for Disassembly and Assembly)

1. INSTALL COOLING FANS

(a) (M /T)

Install the No. 1 cooling fan with the three bolts. Install the No.2 cooling fan with the five bolts.

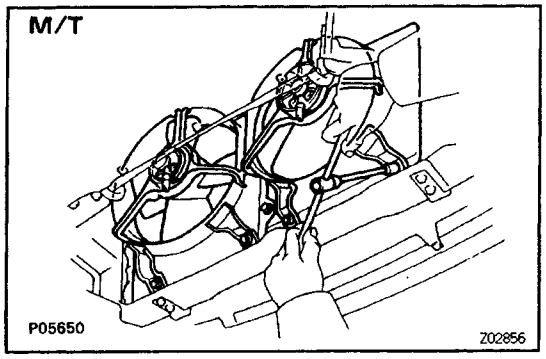

(b) (A/T)

Install the cooling fan with the three bolts. Install the two cooling fans.

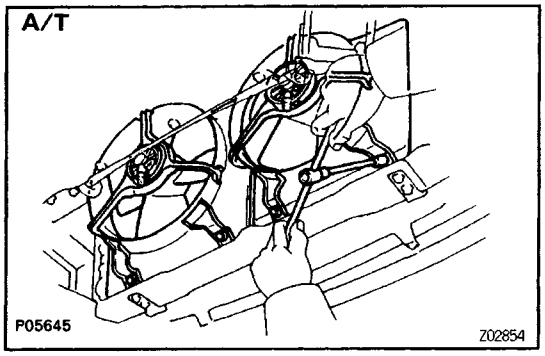

(c) Connect the two cooling fan connectors.

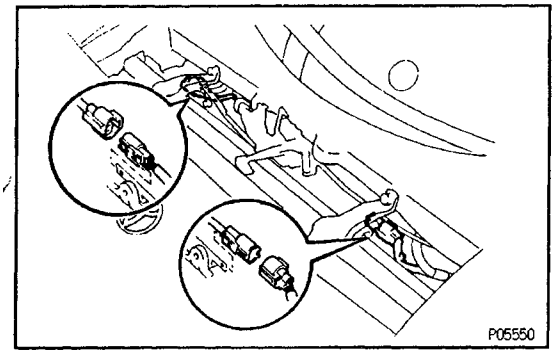

2. INSTALL UPPER RADIATOR SUPPORT SEAL

(a) Temporarily install the hood lock with the RH side bolt.

(b) Place the support seal in position.

(c) Install the hood lock with the two bolts.

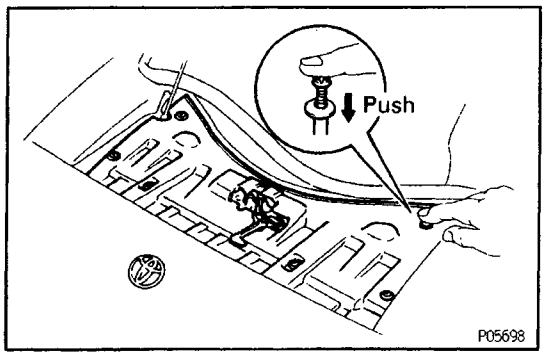

(d) Install the hood weatherstrip.

3. INSTALL RADIATOR LOWER AIR DEFLECTOR

4. CONNECT CABLE TO NEGATIVE TERMINAL OF BATTERY

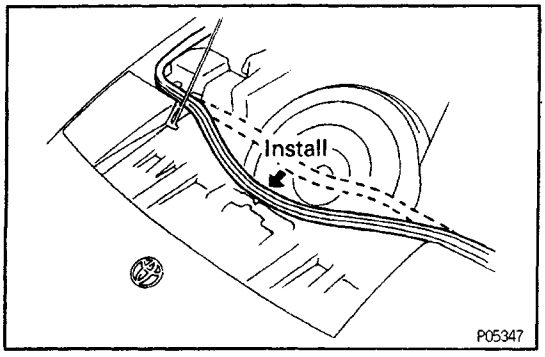

EG07C–08

A/C Amplifier
COMPONENTS FOR REMOVAL AND INSTALLATION

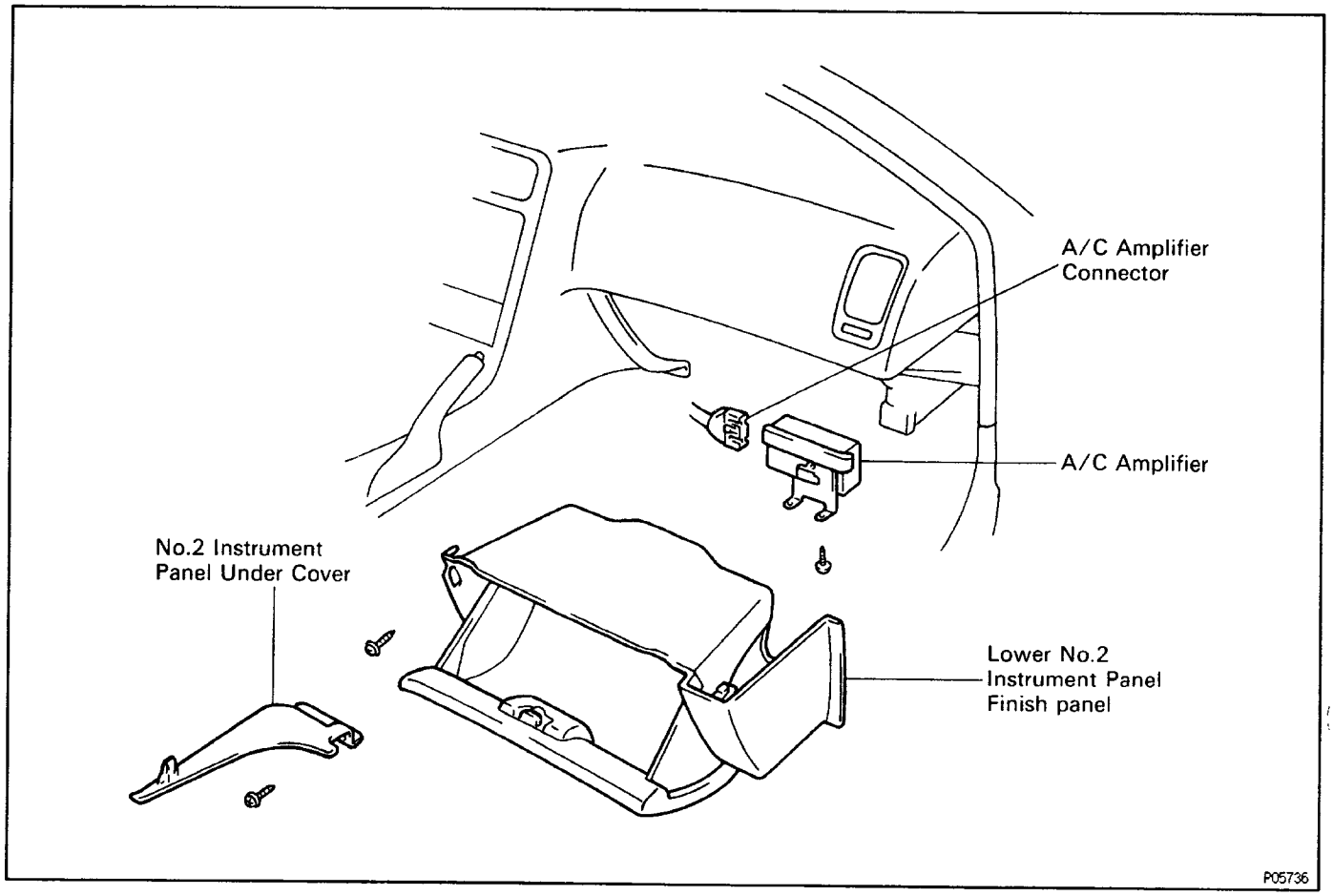

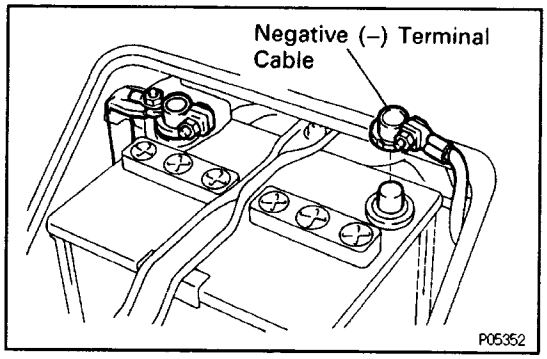

EG141–01

A/C AMPLIFIER INSPECTION

(See Components for Removal and Installation)

1. DISCONNECT CABE FROM NEGATIVE TERMINAL OF BATTERY

CAUTION: Turn the ignition switch to 'LOCK'. Disconnect the negative terminal from the battery. Wait at least 20 seconds before proceeding with work.

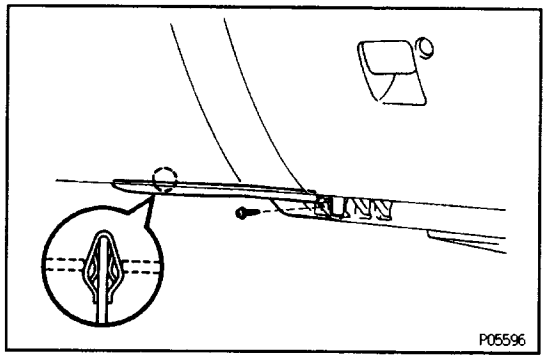

2. REMOVE NO.2 INSTRUMENT PANEL UNDER COVER

(a) Remove the screw.

(b) Remove the under cover by pulling it.

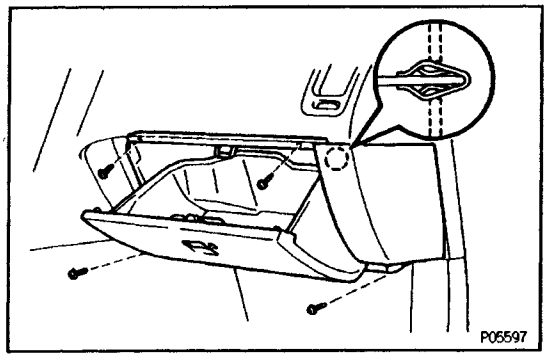

3. REMOVE LOWER NO.2 INSTRUMENT FINISH PANEL

(a) Remove the four screws.
(b) Remove the finish panel by pulling it.

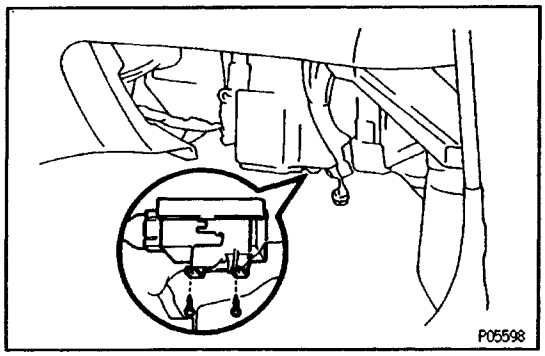

4. INSPECT A/C AMPLIFIER

(a) Remove the two screws, and disconnect the A/C amplifier from the cooler unit.
(b) Disconnect the A/C amplifier connector.

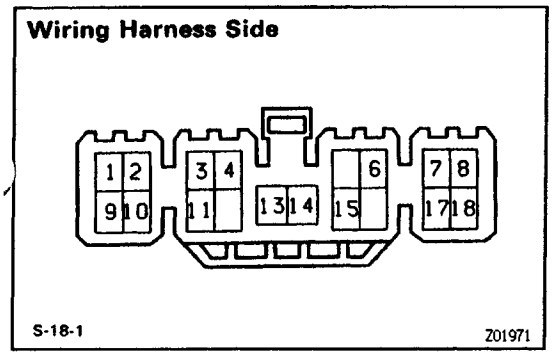

(c) Check the connector on the wiring harness side as shown in the chart.

Check for	Tester connection	Condition		Specified valve
Continuity	3 – Ground	–		Continuity
Voltage	4 – Ground	Ignition switch ON		Battery voltage
Resistance	9–15	Coolant temp.	85°C (185°F)	Approx. 1.35 kΩ
			90°C (194°F)	Approx. 1.19 kΩ
			95°C (203°F)	Approx. 1.05 kΩ
Voltage	10 – Ground	Ignition switch ON		Battery voltage
Continuity	13 – Ground	–		Continuity

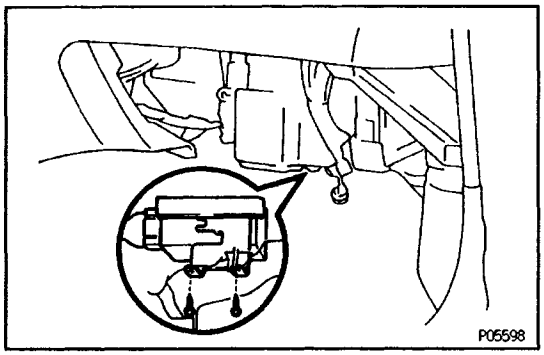

(d) Reconnect the A/C amplifier connector.
(e) Reinstall the A/C amplifier with the two screws.

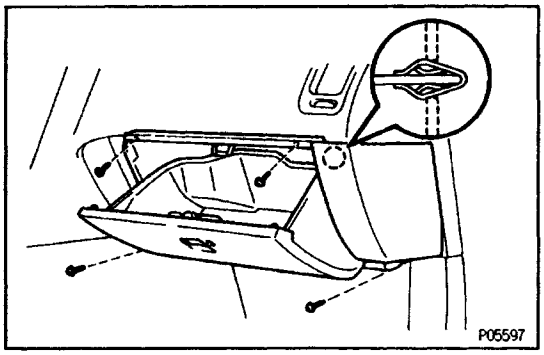

5. REINSTALL LOWER NO. 2 INSTRUMENT FINISH PANEL

(a) Attach the finish panel to the instrument panel with the clips.
(b) Install the four screws.

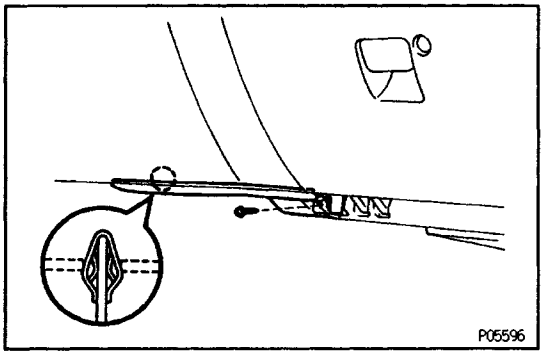

6. REINSTALL NO. 2 INSTRUMENT PANEL UNDER COVER

(a) Attach the finish panel to the instrument panel with the clips.
(b) Install the screw.

7. RECONNECT CABE TO NEGATIVE TERMINAL OF BATTERY

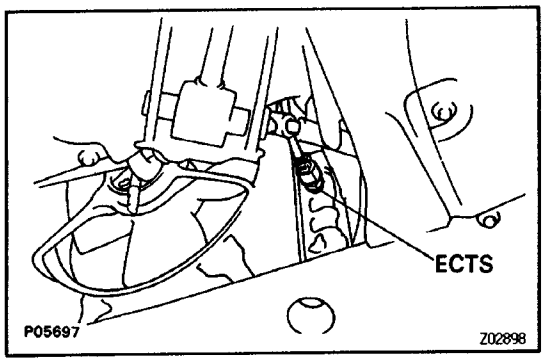

Engine Coolant Temperature Sensor (ECTS)

ECTS INSPECTION

1. DRAIN ENGINE COOLANT FROM RADIATOR

2. REMOVE ECTS

(a) Disconnect the sensor connector.

(b) Remove the ECTS.

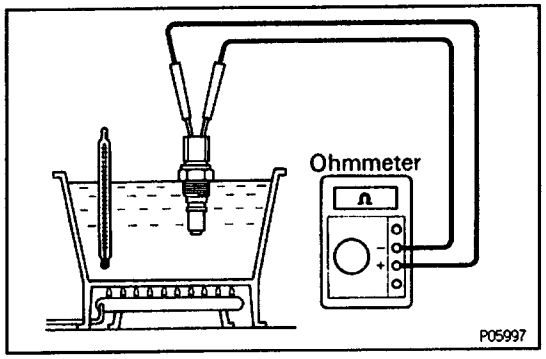

3. INSPECT ECTS

Using an ohmmeter, measure the resistance between the terminals.

Resistance:

Approx. 1.35 kΩ at 85° C (185° F)

Approx. 1.19 kΩ at 90° C (194° F)

Approx. 1.05 kΩ at 95° C (203° F)

If resistance is not as specified, replace the ECTS.

4. REINSTALL ECTS

5. REFILL WITH ENGINE COOLANT

EG14B–01

Fan Main Relay ("FAN MAIN")

FAN MAIN RELAY INSPECTION

1. REMOVE FAN MAIN RELAY

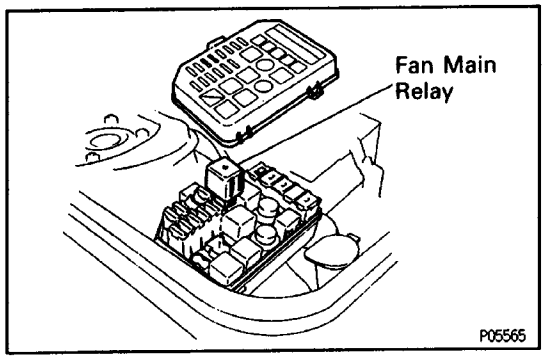

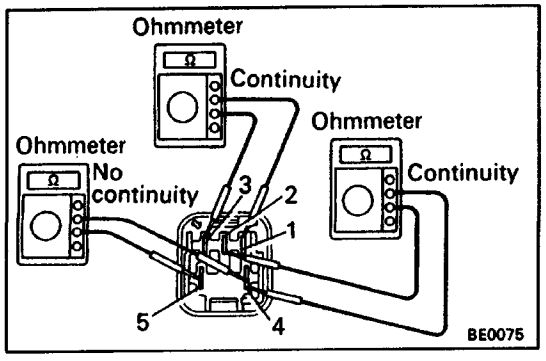

2. INSPECT FAN MAIN RELAY

A. Inspect relay continuity

(a) Using an ohmmeter, check that there is continuity between terminals 1 and 3.

(b) Check that there is continuity between terminals 2 and 4.

(c) Check that there is no continuity between terminals 4 and 5.

If continuity is not as specified, replace the relay.

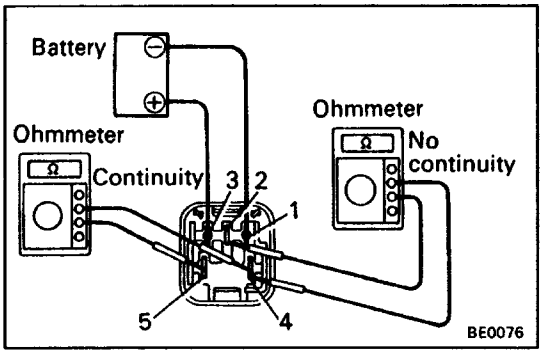

B. Inspect relay operation

(a) Apply battery voltage across terminals 1 and 3.

(b) Using an ohmmeter, check that there is no continuity between terminals 2 and 4.

(c) Check that there is continuity between terminals 4 and 5.

If operation is not as specified, replace the relay.

3. REINSTALL FAN MAIN RELAY

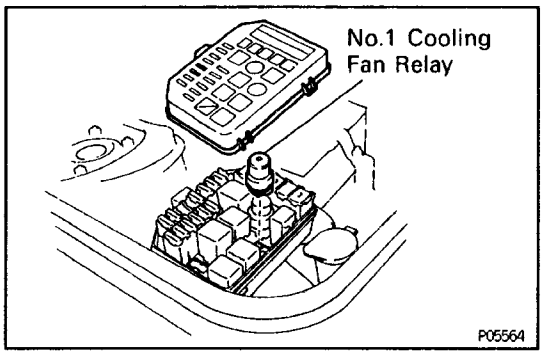

No.1 Cooling Fan Relay (”FAN NO.1”) EG144-01

NO.1 COOLING FAN RELAY INSPECTION

7. REMOVE NO.1 COOLING FAN RELAY

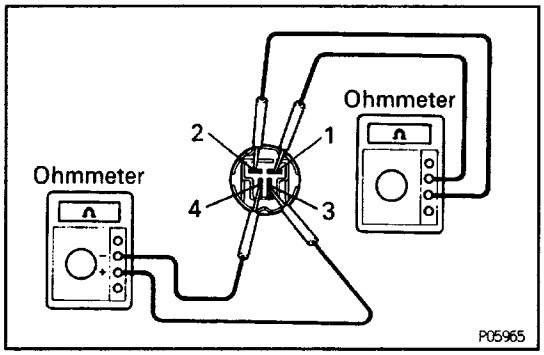

2. INSPECT NO.1 COOLING FAN RELAY

A. Inspect relay continuity

(a) Using an ohmmeter, check that there is continuity between terminals 1 and 2.

(b) Check that there is continuity between terminals and 4.

If continuity is not as specified, replace the relay.

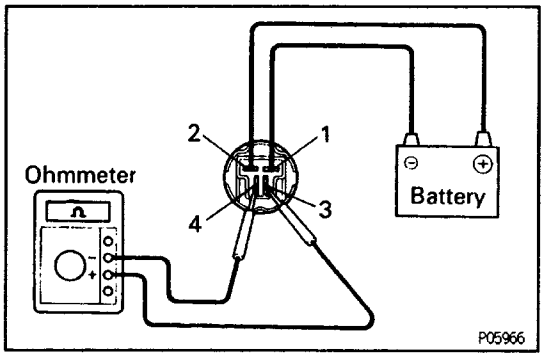

B. Inspect relay operation

(a) Apply battery voltage across terminals 1 and 2.

(b) Using an ohmmeter, check that there is no continuity between terminals 3 and 4.

If operation is not as specified, replace the relay.

3. REINSTALL NO.1 COOLING FAN RELAY

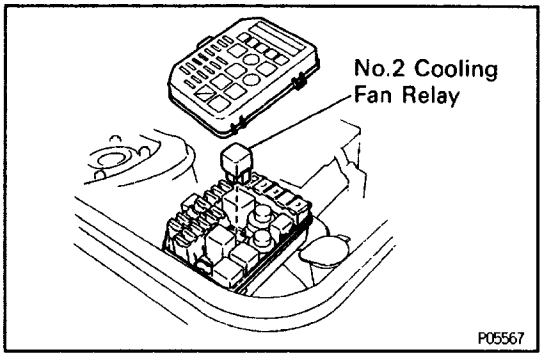

No.2 Cooling Fan Relay (”FAN NO.2”) EG146-01

NO.2 COOLING FAN RELAY INSPECTION

1. REMOVE NO.2 COOLING FAN RELAY

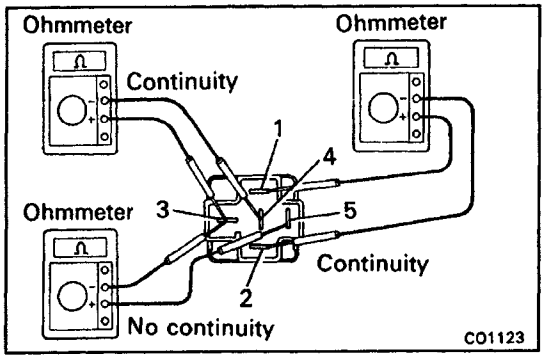

2. INSPECT NO.2 COOLING FAN RELAY

A. Inspect relay continuity

(a) Using an ohmmeter, check that there is continuity between terminals 1 and 2.

(b) Check that there is continuity between terminals 3 and 4.

(c) Check that there is no continuity between terminals 3 and 5.

If continuity is not as specified, replace the relay.

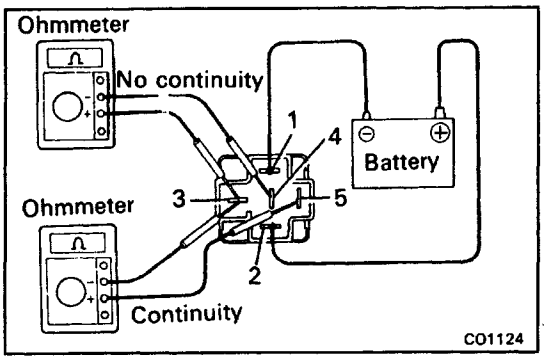

B. Inspect relay operation

(a) Apply battery voltage across terminals 1 and 2.

(b) Using an ohmmeter, check that there is no continuity between terminals 3 and 4.

(c) Using an ohmmeter, check that there is continuity between terminals 3 and 5.

If operation is not as specified, replace the relay.

3. REINSTALL NO.2 COOLING FAN RELAY

No.3 Cooling Fan Relay (”FAN NO.3”)

NO.3 COOLING FAN RELAY INSPECTION

1. REMOVE NO.3 COOLING FAN RELAY

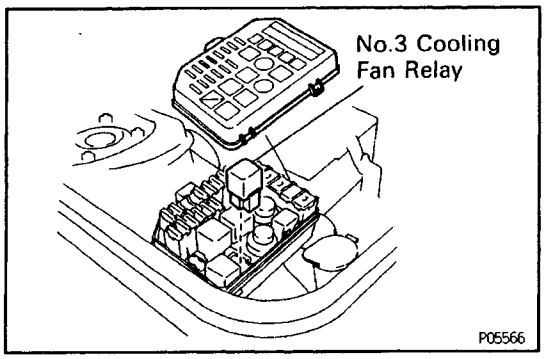

2. INSPECT NO.3 COOLING FAN RELAY

A. Inspect relay continuity

(a) Using an ohmmeter, check that there is continuity between terminals 1 and 2.

(b) Check that there is no continuity between terminals 3 and 5.

If continuity is not as specified, replace the relay.

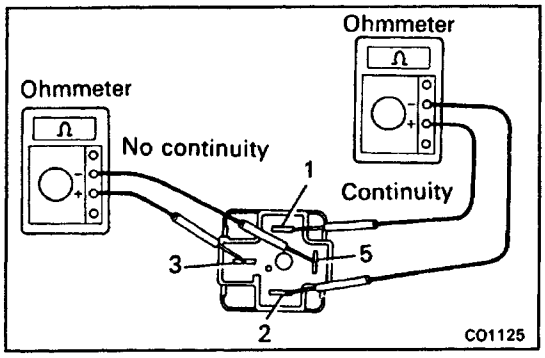

B. Inspect relay operation

(a) Apply battery voltage across terminals 1 and 2.

(b) Using an ohmmeter, check that there is continuity between terminals 3 and 5.

If operation is not as specified, replace the relay.

3. REINSTALL NO.3 COOLING FAN RELAY

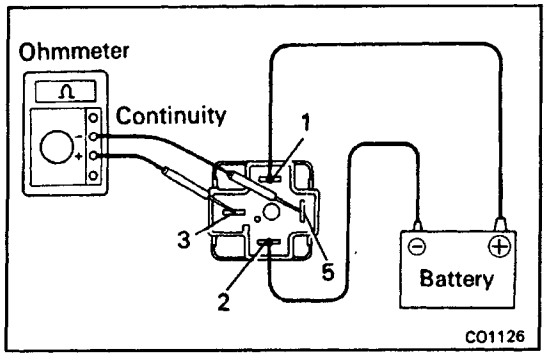

RADIATOR

EG13L–01

RADIATOR CLEANING

Using water or a steam cleaner, remove any mud and dirt from the radiator core.

NOTICE: If using a high pressure type cleaner, be careful not to deform the fins of the radiator core. If the cleaner nozzle pressure is 2,942 – 3.432 kPa (30 – 35 kgf/cm^2, 427 – 498 psi), keep a distance of at least 40 – 50 cm (15.75 – 19.69 in.) between the radiator core and cleaner nozzle.

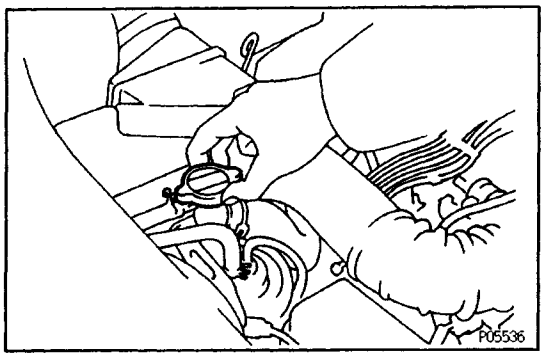

EG13M–01

RADIATOR INSPECTION

1. REMOVE RADIATOR (WATER FILLER) CAP

CAUTION: To avoid the danger of being burned, do not remove it while the engine and radiator are still hot, as fluid and steam can be blown out under pressure.

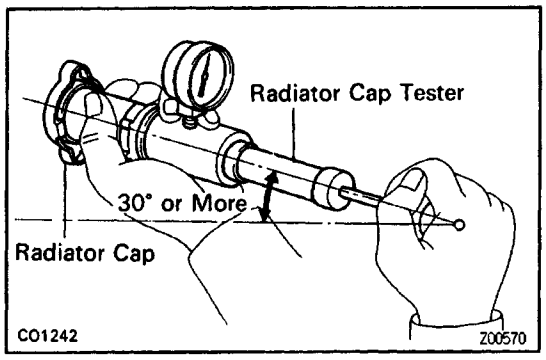

2. INSPECT RADIATOR (WATER FILLER) CAP

NOTICE: When performing steps (a) and (b) below, keep the radiator pump tester at an angle of over 30° above the horizontal.

(a) Using a radiator cap tester, slowly pump the tester and check that air is coming from the relief valve.

Pump speed:

1 push/3 seconds or more

NOTICE: Push the pump at a constant speed.

If air is not coming from the relief valve, replace the radiator cap.

(b) Pump the tester several times and measure the relief valve opening pressure.

Pump speed:

1st time

1 push/1 second or less

2nd time or more

Any speed

Standard opening pressure:

74 – 103 kPa

(0.75 – 1.05 kgf/cm^2, 10.7 – 14.9 psi)

Minimum opening pressure:

59 kPa (0.6 kgf/cm^2, 8.5 psi)

If the opening pressure is less than minimum, r place the radiator cap.

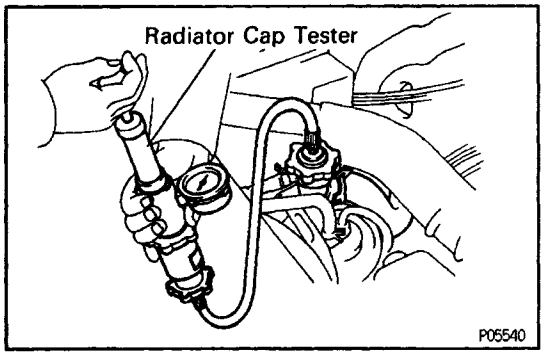

3. INSPECT COOLING SYSTEM FOR LEAKS

(a) Fill the radiator with coolant and attach a radiator cap tester to the water filler.

(b) Warm up the engine.

(c) Pump it to 118 kPa (1.2 kgf/cm^2, 17.1 psi), and check that the pressure does not drop.

If the pressure drops, check the hoses, radiator or water pump for leaks. If no external leaks are found, check the heater core, cylinder block and head.

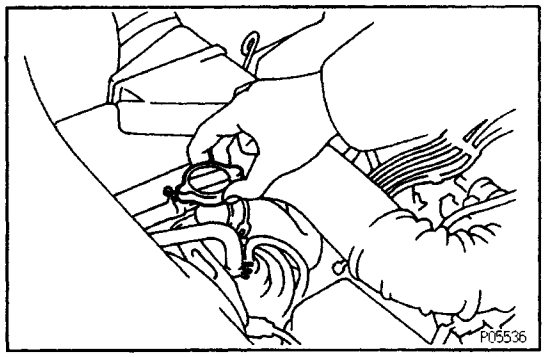

4. REINSTALL RADIATOR (WATER FILLER) CAP

COMPONENTS FOR REMOVAL AND INSTALLATION

EG13N–01

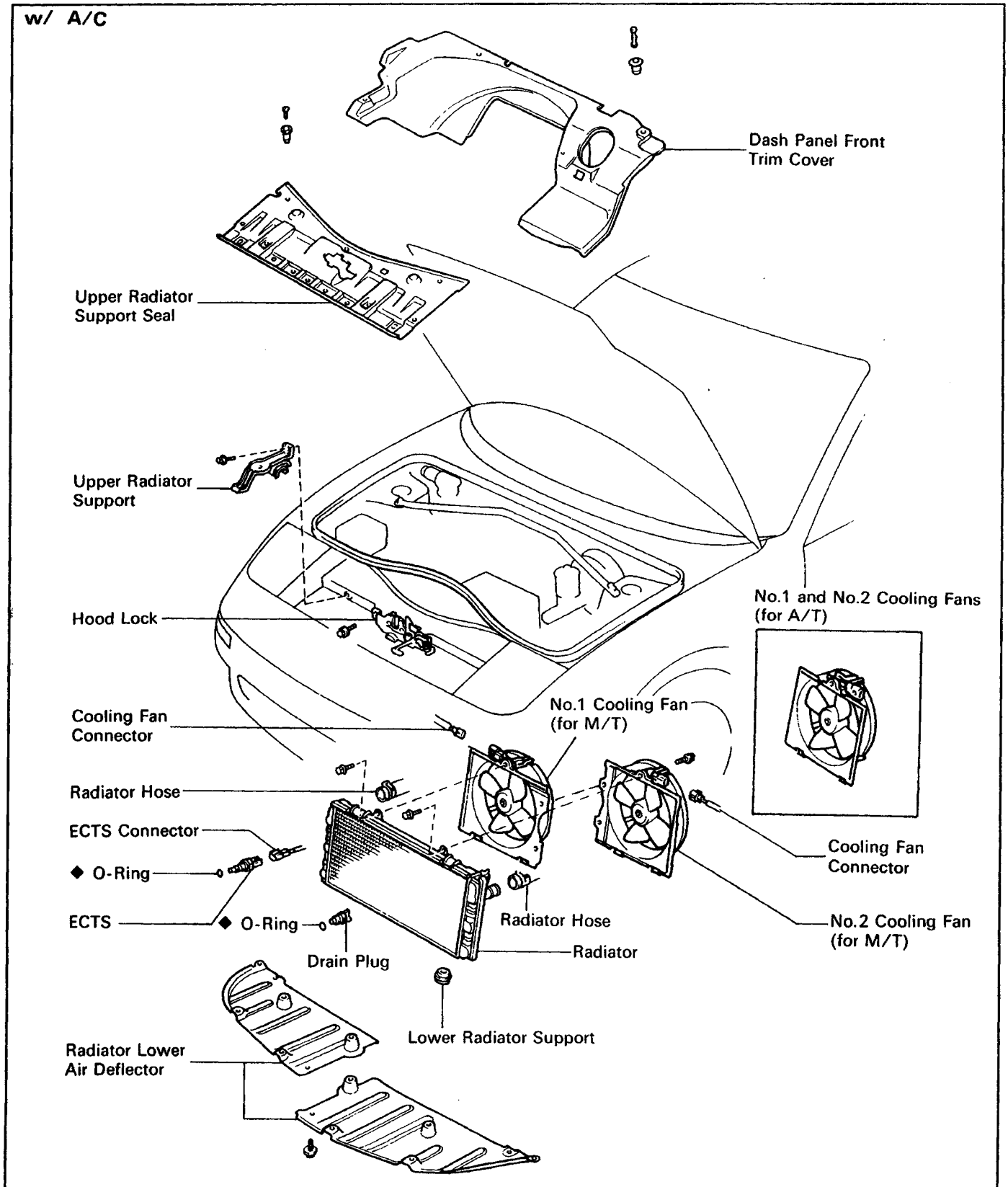

• Non–reusable part

w/o A/C

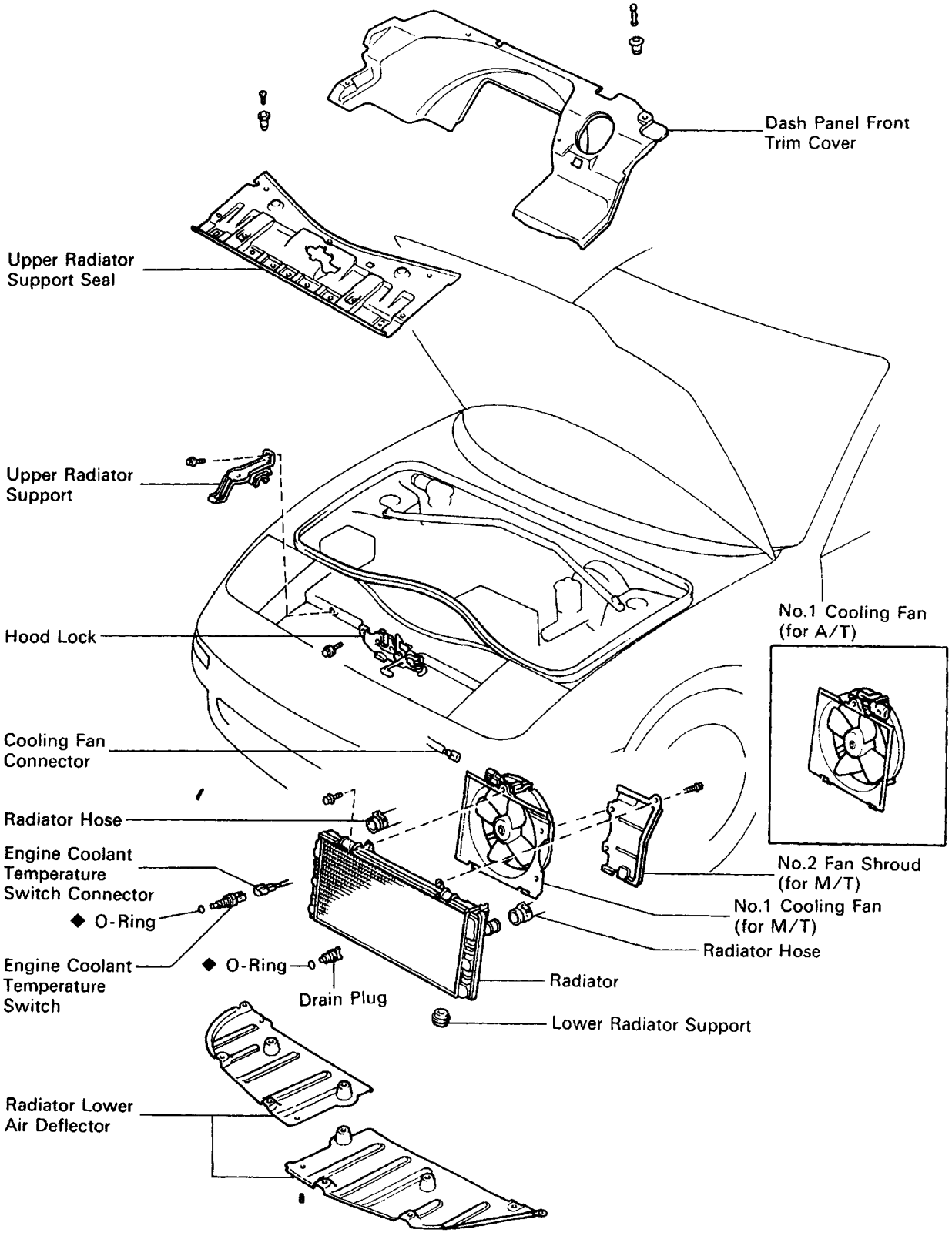

◆ Non-reusable part

P05661

EG13P–01

RADIATOR REMOVAL

(See Components for Removal and Installation)

1. DISCONNECT CABLE FROM NEGATIVE TERMINAL OF BATTERY

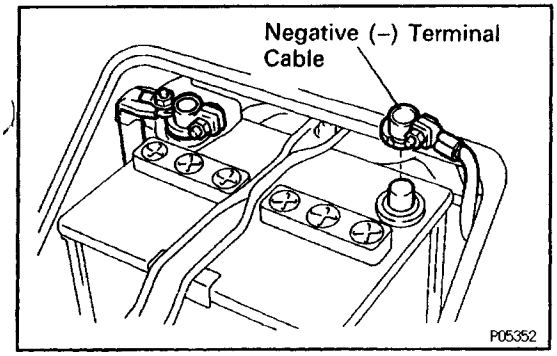

CAUTION: Turn the ignition switch to "LOCK". Disconnect the negative terminal from the battery. Wait at least 20 seconds before proceeding with work.

2. REMOVE RADIATOR LOWER AIR DEFLECTOR

3. DRAIN ENGINE COOLANT

4. REMOVE UPPER RADIATOR SUPPORT SEAL

(a) Disconnect the hood weatherstrip.

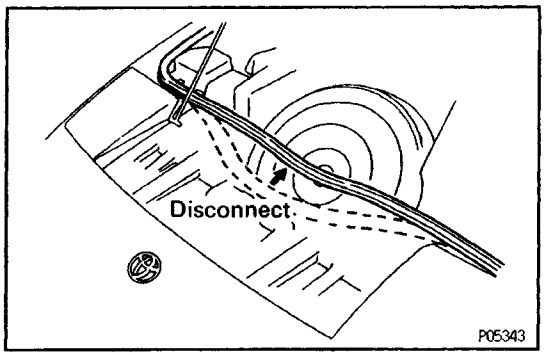

(b) Remove the seven clips.

(c) Remove the two hood lock mounting bolts, and remove the support seal.

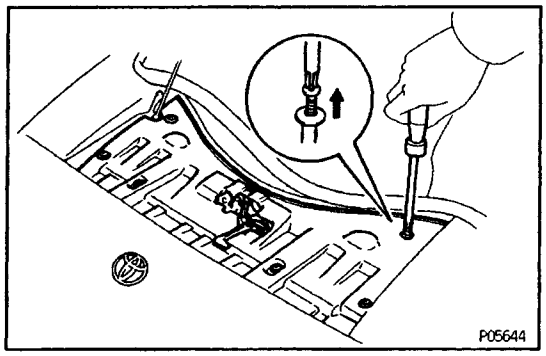

5. (w/ A/C)

REMOVE NO.1 AND NO.2 COOLING FANS

(a) Disconnect the two cooling fan connectors.

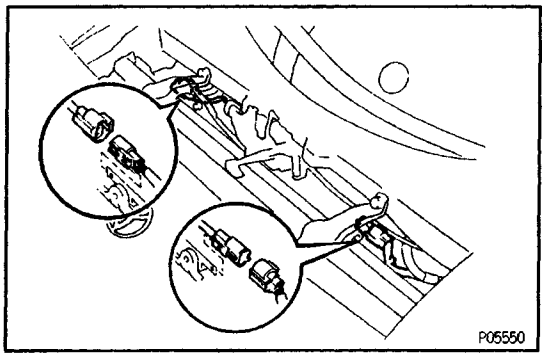

(b) (M /T)

Remove the five bolts and No.2 cooling fan. Remove the three bolt and No.1 cooling fan.

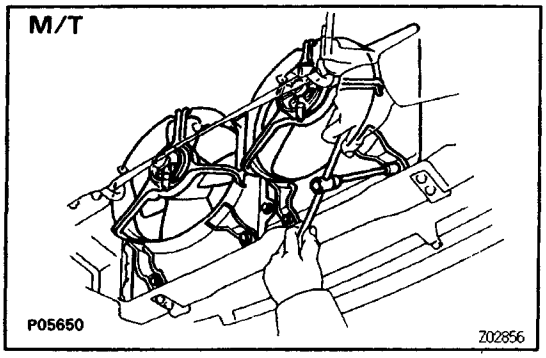

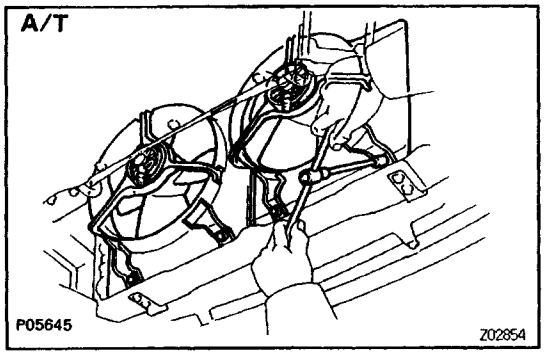

(c) (A/T)
Remove the three bolts and cooling fan. Remove the two cooling fans.

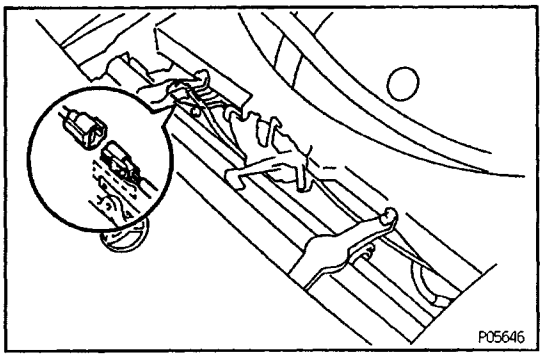

6. (w/o A/C)

REMOVE N0.1 COOLING FAN

(a) Disconnect the cooling fan connector.

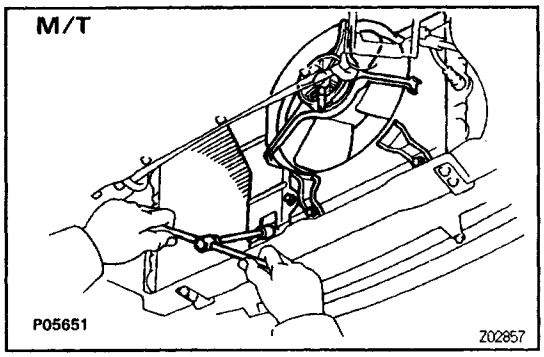

(b) (M /T)
Remove the four bolts and No.2 fan shroud. Remove the three bolts and No.1 cooling fan.

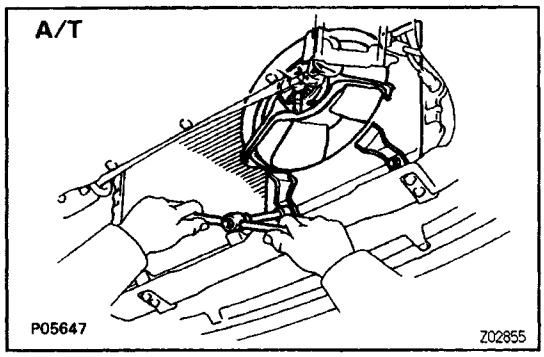

(c) (A/T)
Remove the three bolts and cooling fan.

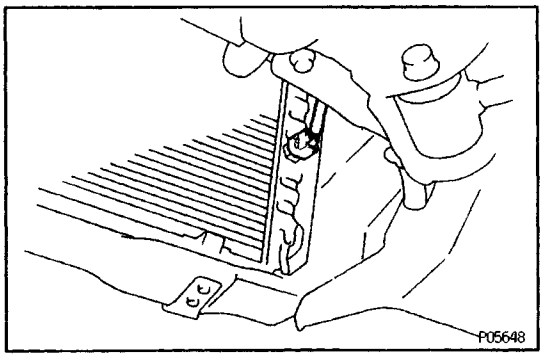

7. (w/ A/C)

DISCONNECT ECTS CONNECTOR

8. (w/o A/C)

DISCONNECT ENGINE COOLANT TEMPERATURE SWITCH CONNECTOR

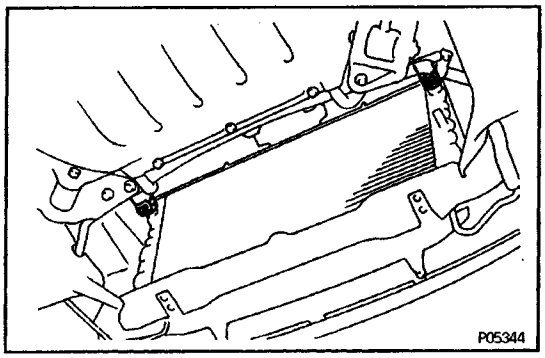

9. DISCONNECT RADIATOR HOSES

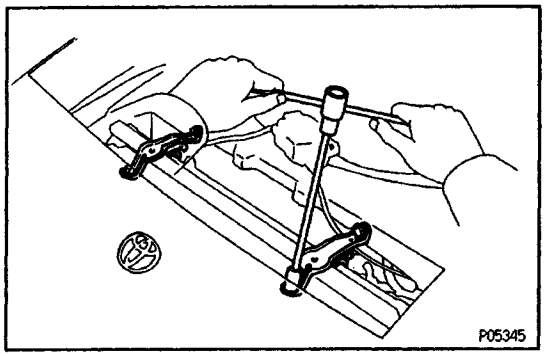

10. REMOVE RADIATOR

(a) Remove the two bolts and upper support. Remove the two upper supports.

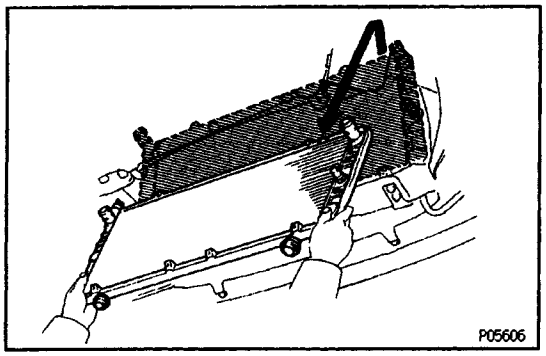

(b) Remove the radiator.

(c) Remove the two lower radiator supports.

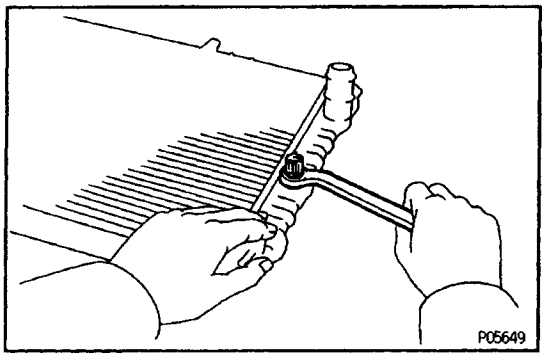

11. (w/ A/C)

REMOVE ECTS FROM RADIATOR

(a) Remove the ECTS.

(b) Remove the O–ring from the ECTS.

12. (w/o A/C)

REMOVE ENGINE COOLANT TEMPERATURE SWITCH FROM RADIATOR

(a) Remove the temperature switch.

(b) Remove the O–ring from the temperature switch.

EG13Q–01

RADIATOR INSTALLATION

(See Components for Disassembly and Assembly)

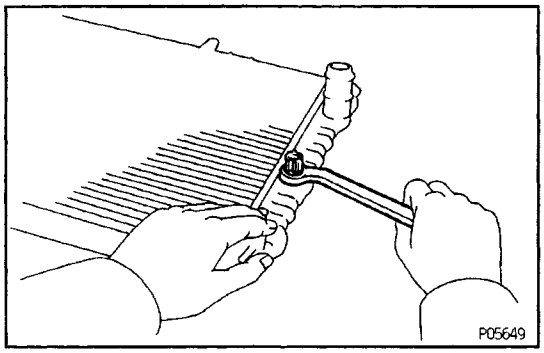

1. (w/ A/C)

INSTALL ECTS TO RADIATOR

(a) Install a new O–ring to the ECTS.

(b) Install the ECTS.

2. (w/o A/C)

INSTALL ENGINE COOLANT TEMPERATURE SWITCH TO RADIATOR

(a) Install a O–ring to the temperature switch.

(b) Install the temperature switch.

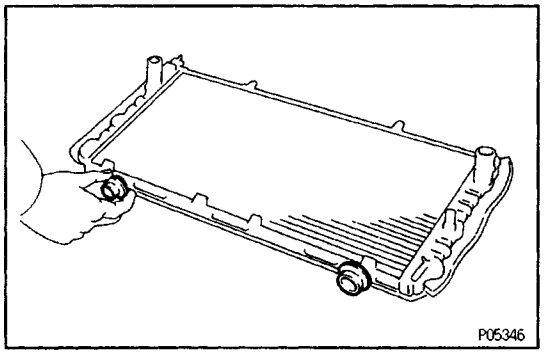

3. INSTALL RADIATOR

(a) Install the two lower radiator supports to the radiator.

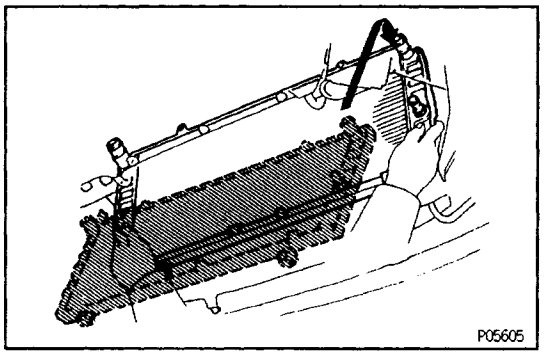

(b) Place the radiator in position on the body.

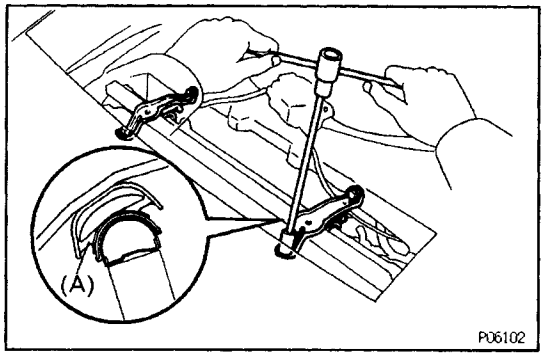

(c) Install the upper radiator support. Install the two upper supports.

Torque: 13 N–m (130 kgf–cm, 9 ft–lbf)

HINT: After installation, check that the rubber cushion (A) of the support is not depressed.

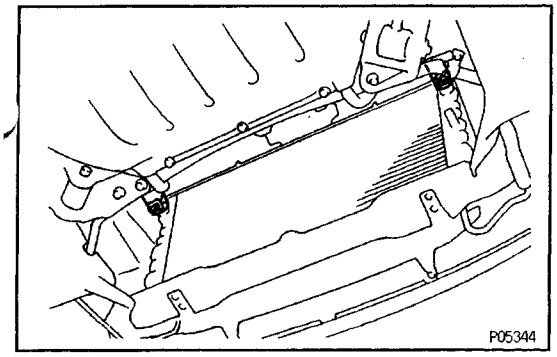

4. CONNECT RADIATOR HOSES

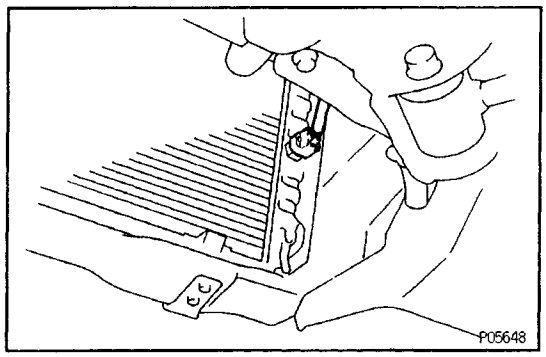

5. (w/ A/C)
CONNECT ECTS CONNECTOR
6. (w/o A/C)
CONNECT ENGINE COOLANT TEMPERATURE SWITCH CONNECTOR

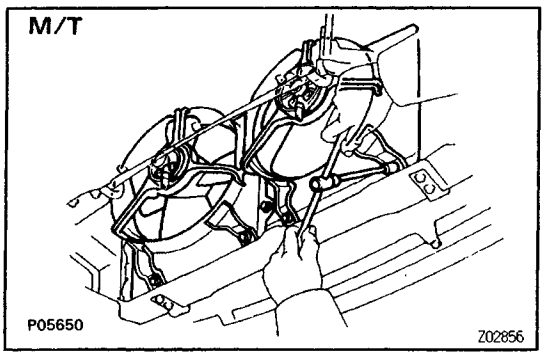

7. (w/ A/C)
INSTALL NO.1 AND NO.2 COOLING FANS
(a) (M/T)
Install the No. 1 cooling fan with the three bolts. Install the No.2 cooling fan with the five bolts.

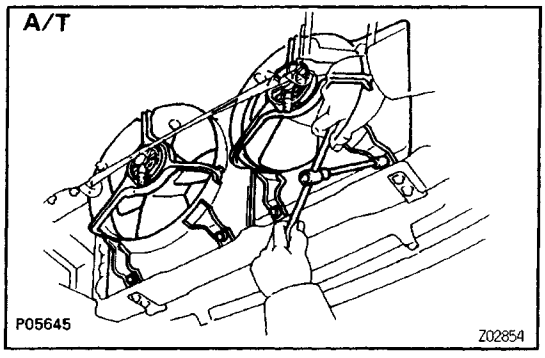

(b) (A/T)
Install the cooling fan with the three bolts. Install the two cooling fans.

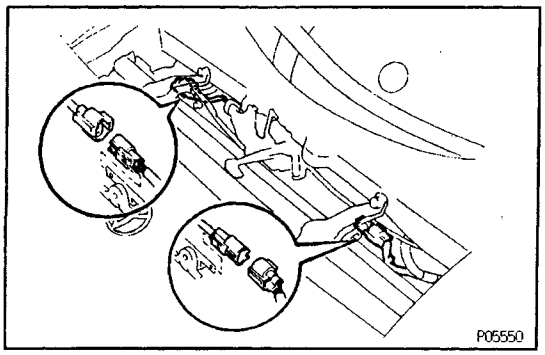

(c) Connect the two cooling fan connectors.

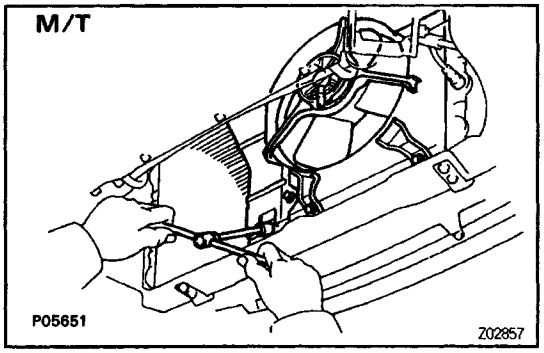

8. (w/o A/C)

INSTALL N0.1 COOLING FAN

(a) (M/T)

Install the No. 1 cooling fan with the three bolts. Install the No.2 fan shroud with the five bolts.

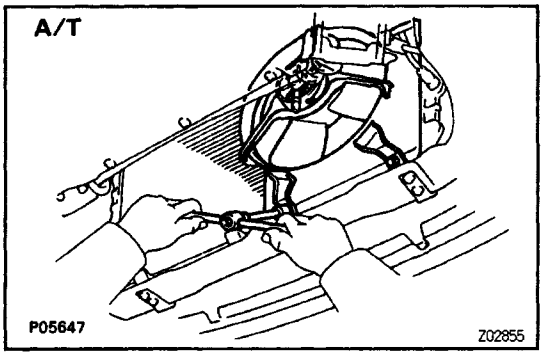

(b) (A/T)

Install the cooling fan with the three bolts.

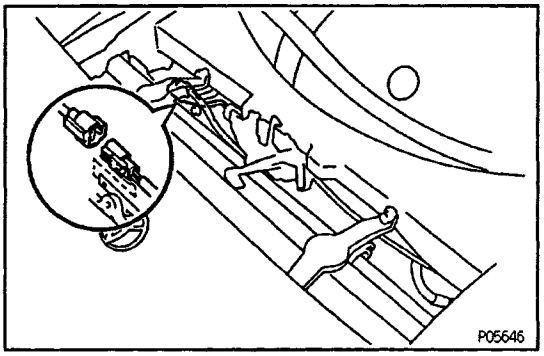

(c) Connect the cooling fan connector.

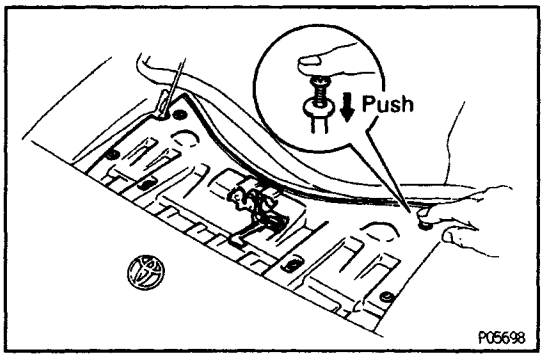

9. INSTALL UPPER RADIATOR SUPPORT SEAL

(a) Temporarily install the hood lock with the RH side bolt.

(b) Place the support seal in position.

(c) Install the hood lock with the two bolts.

(d) Install the seven clips.

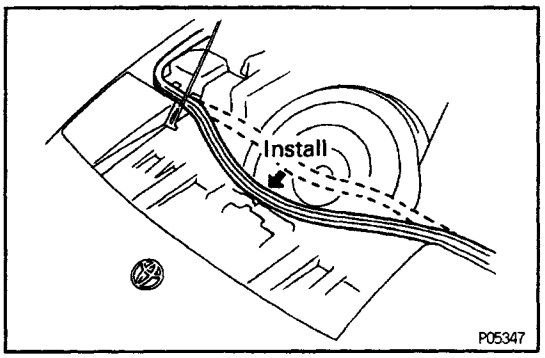

(e) Install the hood weatherstrip.

10. INSTALL RADIATOR LOWER AIR DEFLECTOR

11. FILL WITH ENGINE COOLANT

12. CONNECT CABLE TO NEGATIVE TERMINAL OF BATTERY

13. START ENGINE AND CHECK FOR COOLANT LEAKS

SERVICE SPECIFICATIONS

SERVICE DATA

EG07L–04

Thermostat	Valve opening temperature	80 – 84°C (176 – 183°F)
	Valve lift (at 95°C (203°F))	8 mm (0.31 in.) or more
Radiator cap	Relief valve opening pressure (STD)	74 – 103 kPa (0.75 – 1.05 kgf/cm², 10.7 – 14.9 psi)
	Relief valve opening pressure (Limit)	59 kPa (0.6 kgf/cm², 8.5 psi)
Radiator electric cooling fan	Rotating amperage (M/T)	5.8 – 7.4 A
	Rotating amperage (A/T)	8.8 – 10.8 A
ECTS	Resistance (at 85°C (185°F))	Approx. 1.35 kΩ
	Resistance (at 90°C (194°F))	Approx. 1.19 kΩ
	Resistance (at 95°C (203°F))	Approx. 1.05 kΩ

TORQUE SPECIFICATIONS

EG07M–04

Part tightened	N·m	kgf·cm	ft·lbf
Cylinder block x Drain plug	25	250	18
Radiator pipe x Drain plug	17	170	12
Water pump x Water pump cover	8.8	90	78 in.·lbf
Water pump x Cylinder block (10 mm head)	8.8	90	78 in.·lbf
Water pump x Cylinder block (12 mm head)	27	275	20 in.·lbf
Water by–pass pipe x Water pump cover	9.3	95	82 in.·lbf
No.2 idler pulley x Cylinder block	42	425	31
Water inlet x Water pump cover	8.8	90	78 in.·lbf
Radiator support bolt	13	130	9

THERMOSTAT

EG13D–01

COMPONENTS FOR REMOVAL AND INSTALLATION

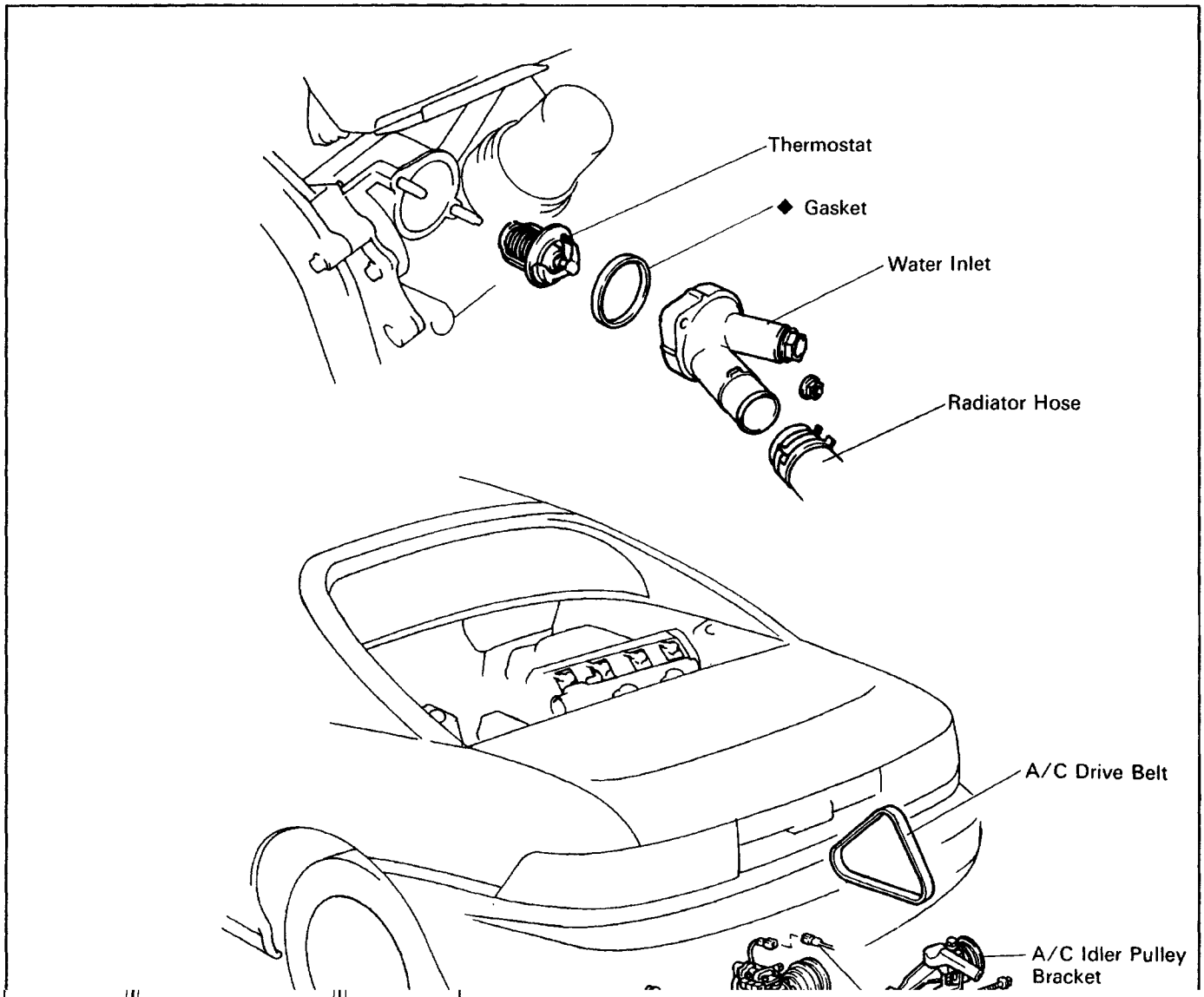

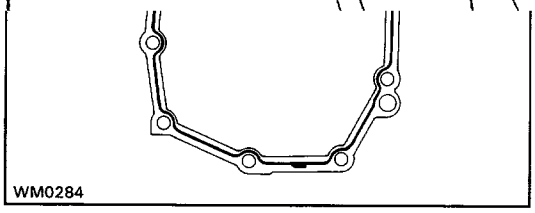

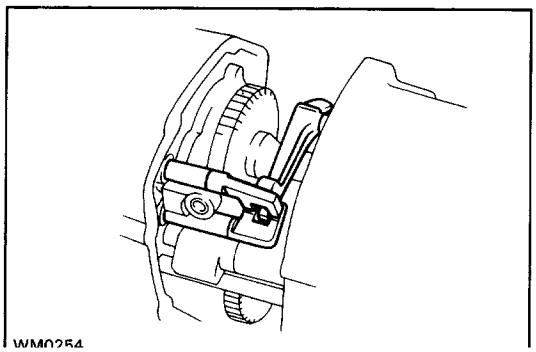

THERMOSTAT REMOVAL

EG13F–01

(See Components for Removal and Installation)

HINT: Removal of the thermostat would have an adverse effect, causing a lowering of cooling efficiency. Do not remove the thermostat, even if the engine tends to overheat.

1. DRAIN ENGINE COOLANT

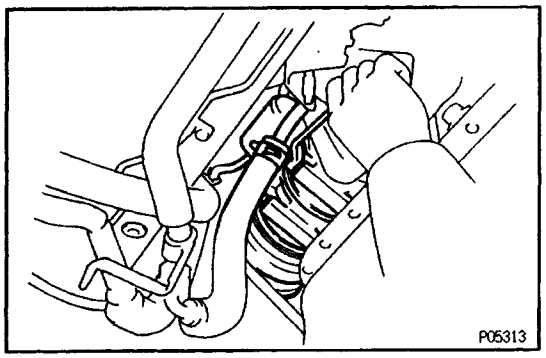

2. DISCONNECT A/C COMPRESSOR FROM ENGINE
(See steps 1, 2 and 5 in Water Pump Removal)

3. DISCONNECT RADIATOR HOSE FROM WATER INLET

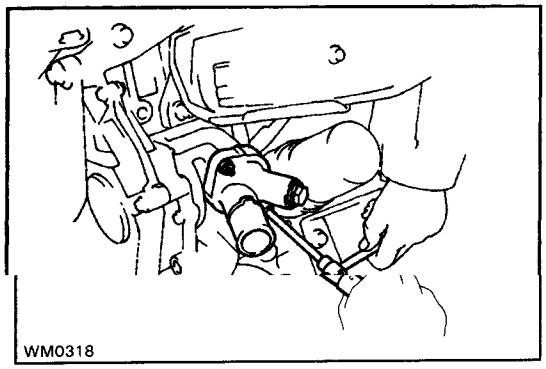

4. REMOVE WATER INLET AND THERMOSTAT

(a) Remove the two nuts and water inlet from the water pump cover.
(b) Remove the thermostat.
(e) Remove the gasket from the thermostat.

THERMOSTAT INSPECTION

INSPECT THERMOSTAT

HINT: The thermostat is numbered with the valve opening temperature.

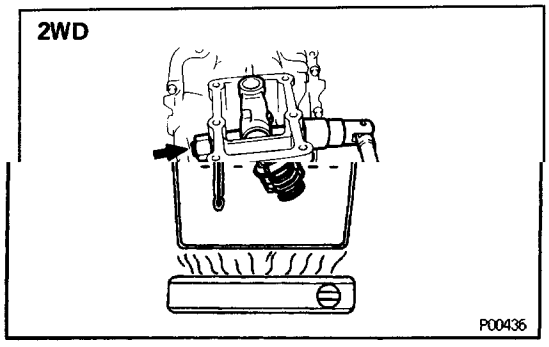

(a) Immerse the thermostat in water and gradually heat the water.
(b) Check the valve opening temperature.

Valve opening temperature:
80 – 84˚C (176 – 183˚F)

If the valve opening temperature is not as specified, replace the thermostat.

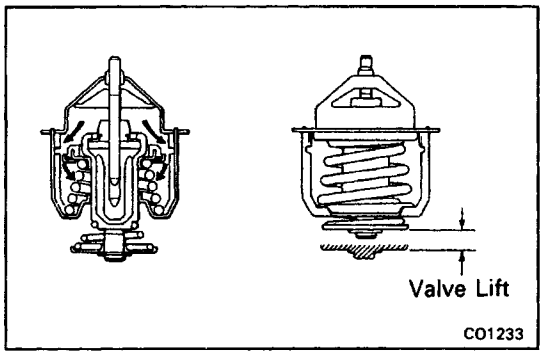

(c) Check the valve lift.

Valve lift:

8 mm (0.31 in.) or more at 95°C (203° F)

If the valve lift is not as specified, replace the thermostat.

(d) Check that the valve spring is tight when the thermostat is fully closed.

If not closed, replace the thermostat.

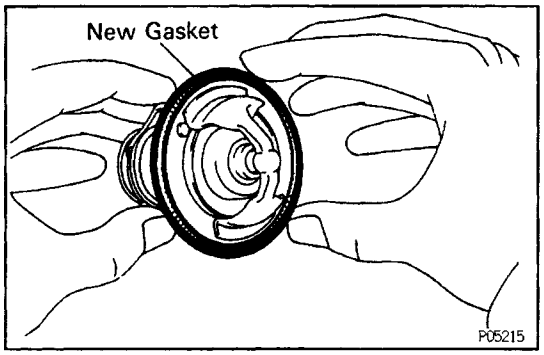

EG13J–01

THERMOSTAT INSTALLATION

(See Components for Removal and Installation)

1. PLACE THERMOSTAT IN WATER PUMP

(a) Install a new gasket to the thermostat.

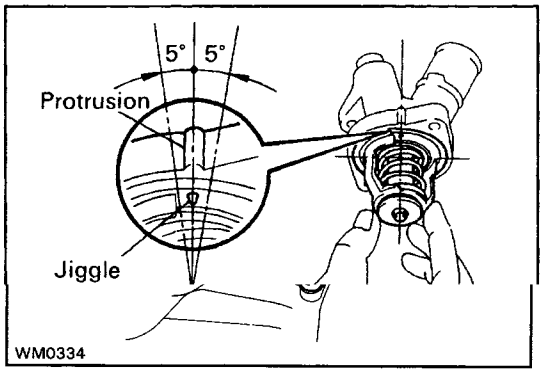

(b) Align the jiggle valve of the thermostat with the protrusion of the water inlet, and insert the thermostat in the water inlet.

HINT: The jiggle valve may be set within 5° of either side of the prescribed position.

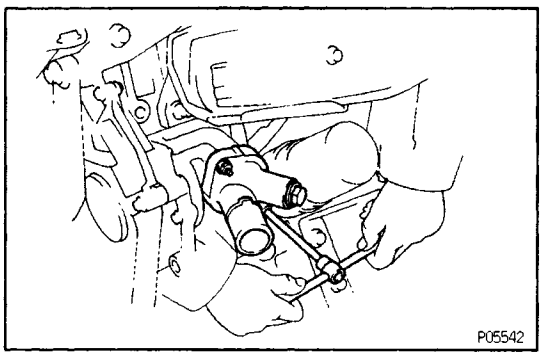

2. INSTALL WATER INLET AND THERMOSTAT

Install the water inlet and thermostat with the two nuts.

Torque: 8.8 N–m (90 kgf–cm, 78 in–lbf)

3. CONNECT RADIATOR HOSE TO WATER INLET

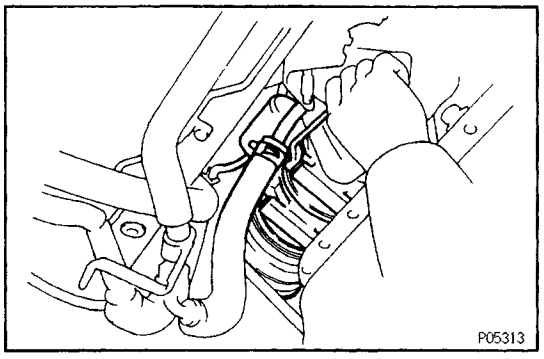

4. INSTALL A/C COMPRESSOR

(See steps 7, 8 and 12 in Water Pump Removal)

5. FILL WITH ENGINE COOLANT

6. START ENGINE AND CHECK FOR COOLANT LEAKS

WATER PUMP

EG138–01

COMPONENTS FOR REMOVAL AND INSTALLATION

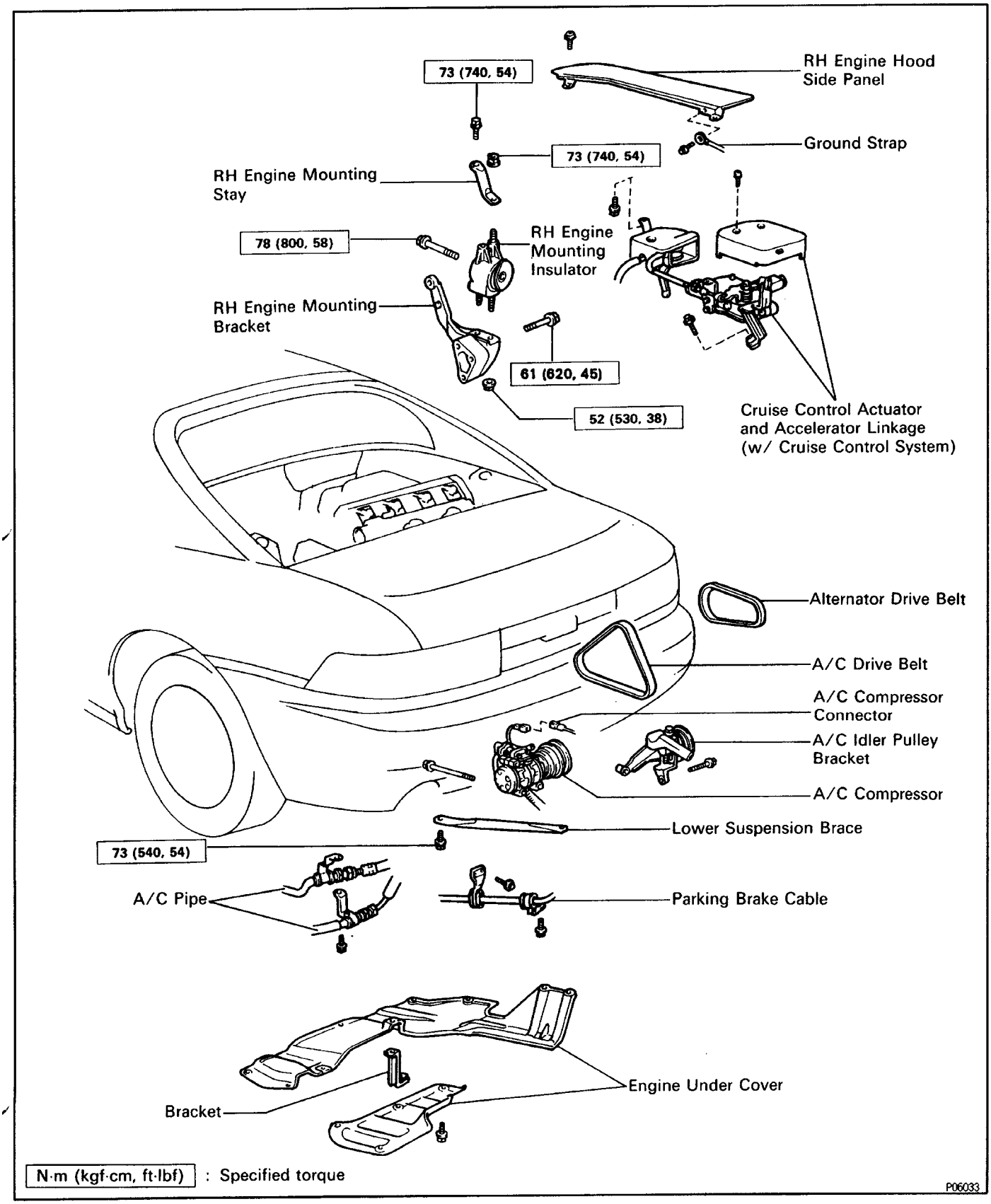

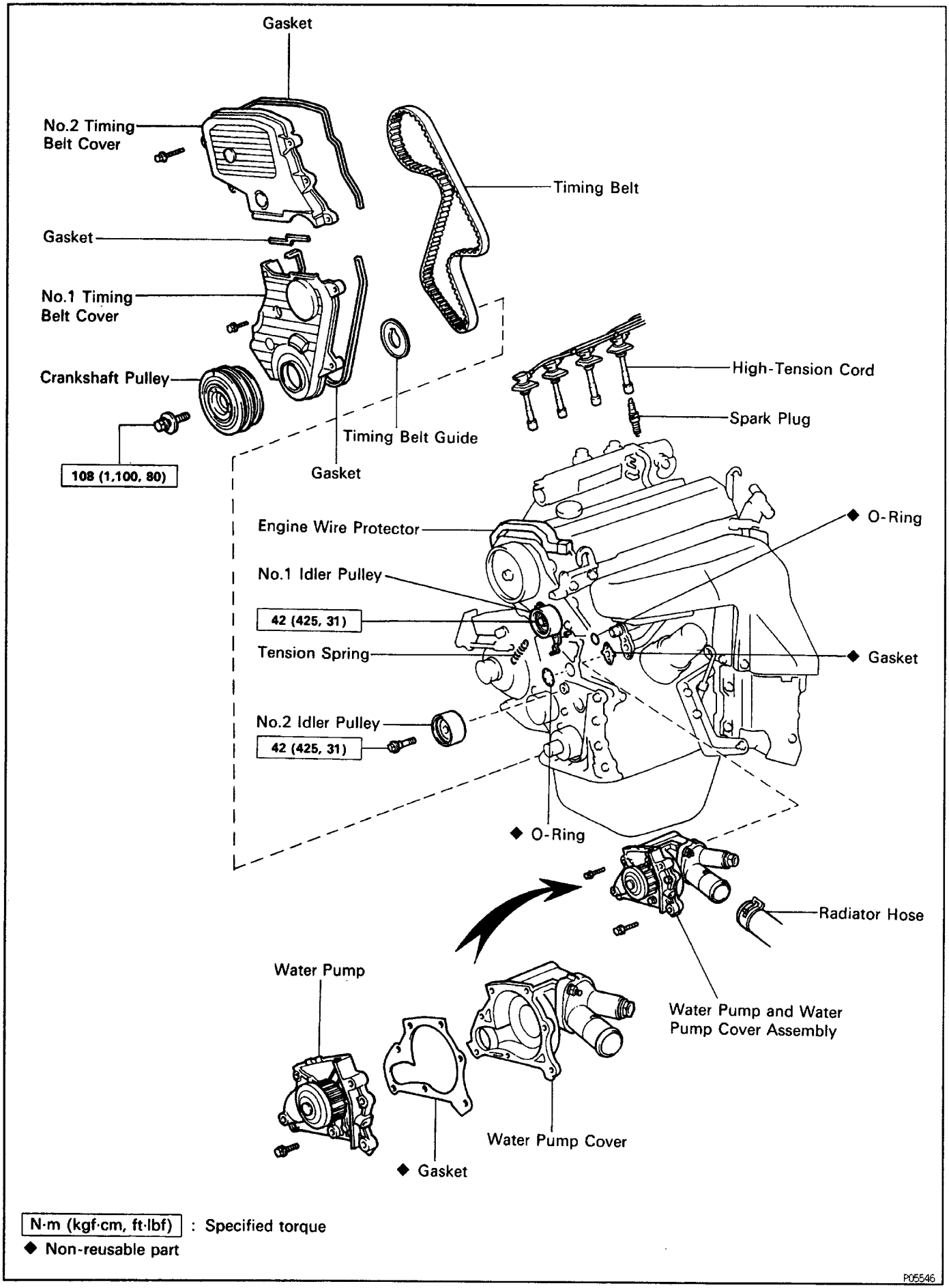
Gasket
No.2 Timing Belt Cover
Timing Belt
Gasket
No.1 Timing Belt Cover
Crankshaft Pulley
108 (1,100, 80)
Timing Belt Guide
Gasket
High-Tension Cord
Spark Plug
Engine Wire Protector
◆ O-Ring
No.1 Idler Pulley
42 (425, 31)
Tension Spring
◆ Gasket
No.2 Idler Pulley
42 (425, 31)
◆ O-Ring
Radiator Hose
Water Pump
Water Pump and Water Pump Cover Assembly
Water Pump Cover
◆ Gasket
N·m (kgf·cm, ft·lbf) : Specified torque
◆ Non-reusable part
P05546

EG139–01

WATER PUMP REMOVAL

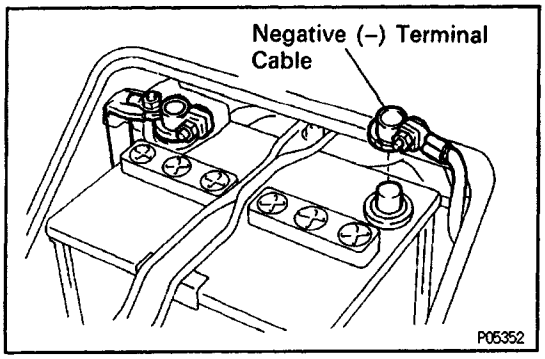

1. DISCONNECT CABLE FROM NEGATIVE TERMINAL OF BATTERY

CAUTION: Turn the ignition switch to "LOCK" Disconnect the negative terminal from the battery. Wait at least 20 seconds before proceeding with work.

2. REMOVE ENGINE UNDER COVERS

3. REMOVE RH ENGINE HOOD SIDE PANEL

4. DRAIN ENGINE COOLANT

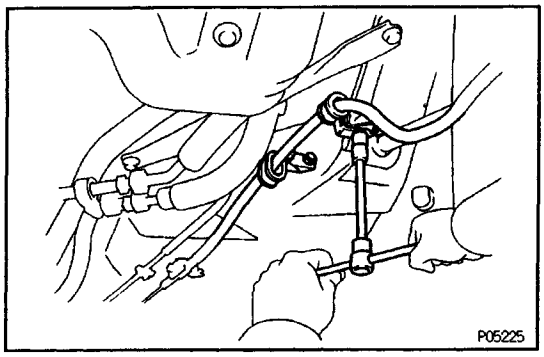

5. DISCONNECT A/C COMPRESSOR FROM ENGINE

(a) Remove the three clamp bolts, and disconnect the parking brake cable.

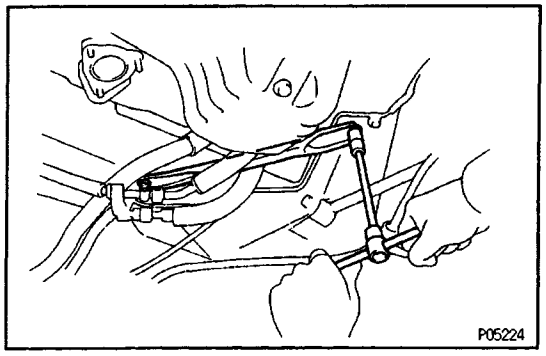

(b) Remove the two bolts and lower suspension brace.

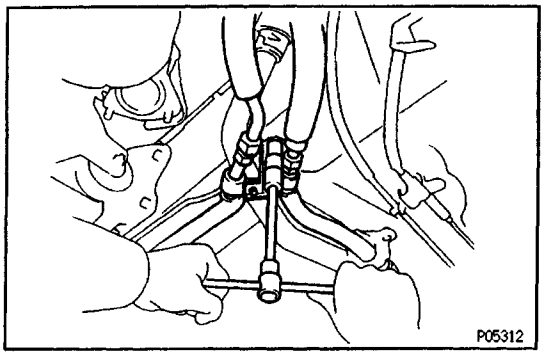

(c) Remove the clamp nut, and disconnect the two A/C pipes.

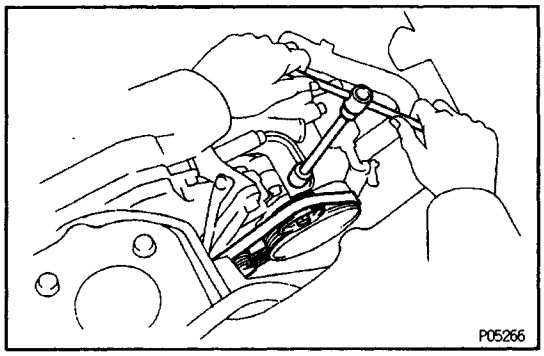

(d) Loosen the idler pulley nut.
(e) Loosen the adjusting bolt, and remove the drive belt.

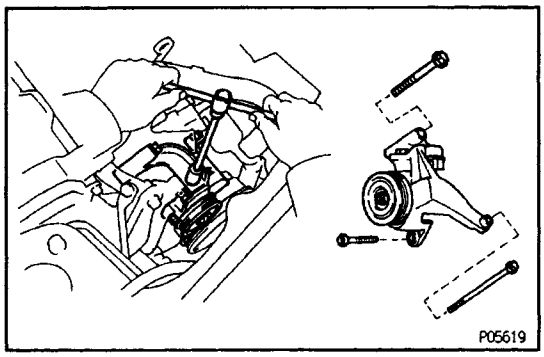

(f) Disconnect the A/C compressor connector.
(g) Remove the three bolts and idler pulley bracket.

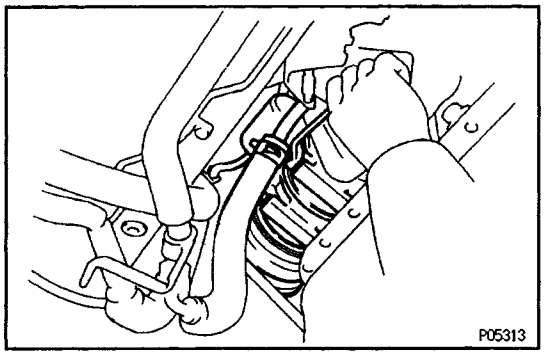

(h) Remove the two bolts, and disconnect the A/C compressor from the engine.

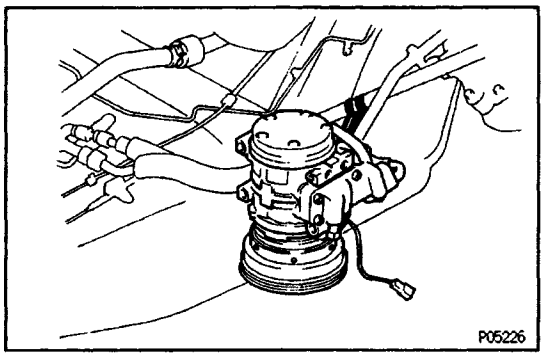

HINT: Suspend the A/C compressor to strut rod with a string.

6. REMOVE TIMING BELT
(See steps 4 to 6 and 8 to 22 in Timing Belt Removal under Engine Mechanical)
7. DISCONNECT RADIATOR HOSE FROM WATER OUTLET

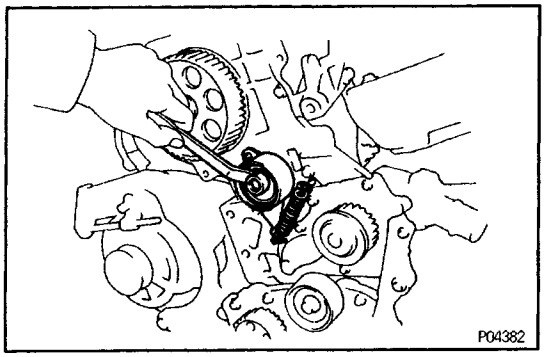

8. REMOVE TIMING BELT TENSION SPRING

Loosen the No.1 idler pulley bolt, and remove the tension spring.

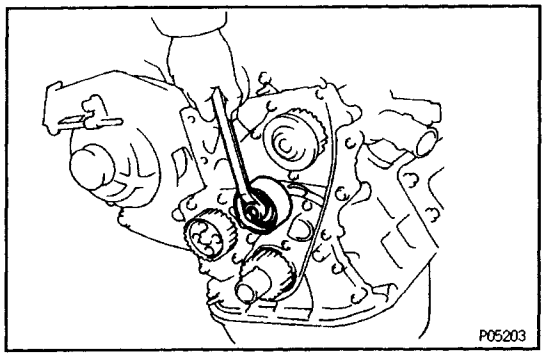

9. REMOVE No.2 IDLER PULLEY

Remove the bolt and pulley.

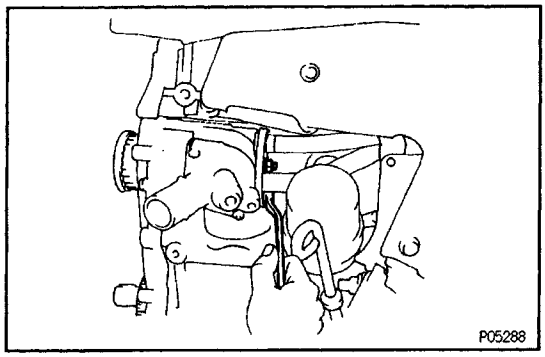

10. REMOVE WATER PUMP AND WATER PUMP COVER ASSEMBLY

(a) Remove the two nuts holding the water pump to the water by–pass pipe.

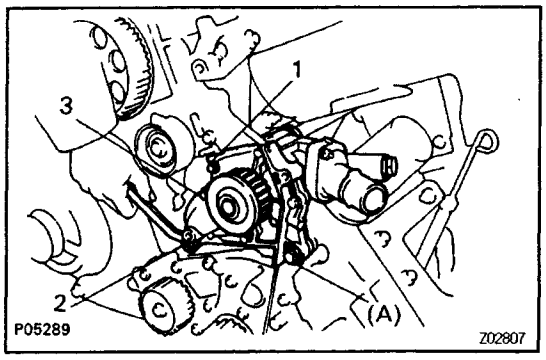

(b) (w/o A/C)
Remove bolt (A).

(c) Remove the three bolts in the sequence shown.

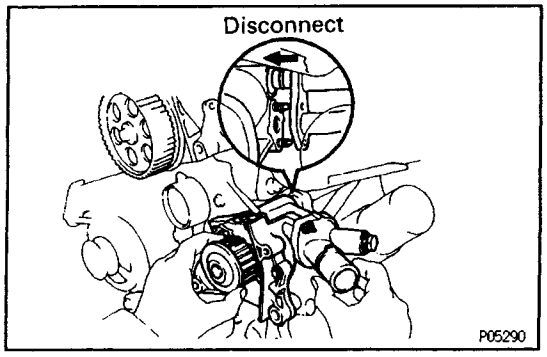

(d) Disconnect the water pump cover from the water by –pass pipe, and remove the water pump and water pump cover assembly.

(e) Remove the gasket and two O–rings from the water pump and water by–pass pipe.

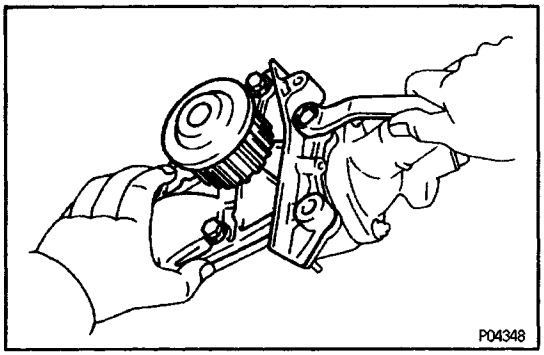

11. REMOVE WATER PUMP FROM WATER PUMP COVER

Remove the three bolts, water pump and gasket.

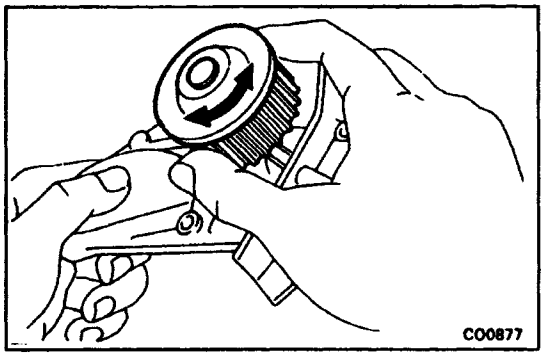

EG18A–01

WATER PUMP INSPECTION

INSPECT WATER PUMP

Turn the pulley and check that the water pump bea–ring moves smoothly and quietly.

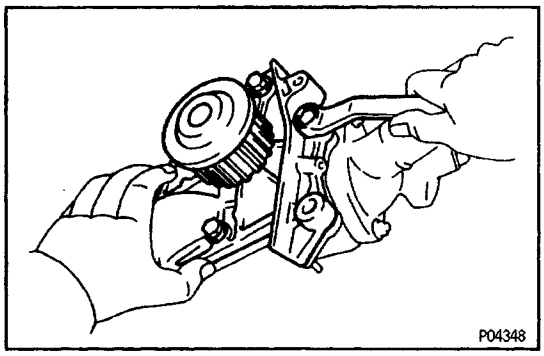

EG13B–01

WATER PUMP INSTALLATION

(See Components for Removal and Installation)

1. INSTALL WATER PUMP TO WATER PUMP COVER

Install a new gasket and the water pump with the three bolts.

Torque: 8.8 N–m (90 kgf–cm, 78 in.–lbf)

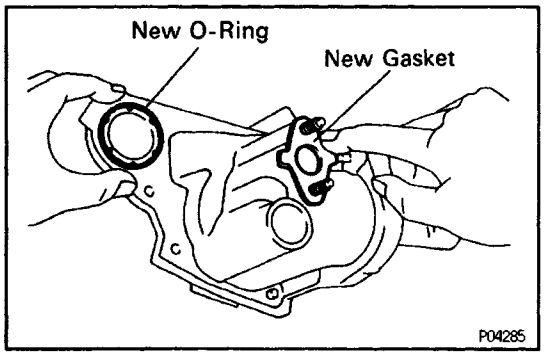

2. INSTALL WATER PUMP AND WATER PUMP COVER ASSEMBLY

(a) Install new O–ring and gasket to water pump cover.

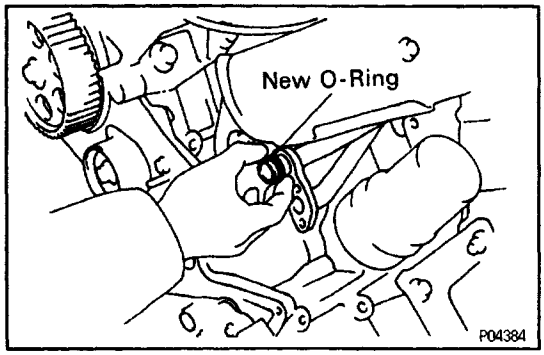

(b) Instal a new O–ring to the water by–pass pipe.

(c) Apply soapy water to the 0– ring on the water by–pass pipe.

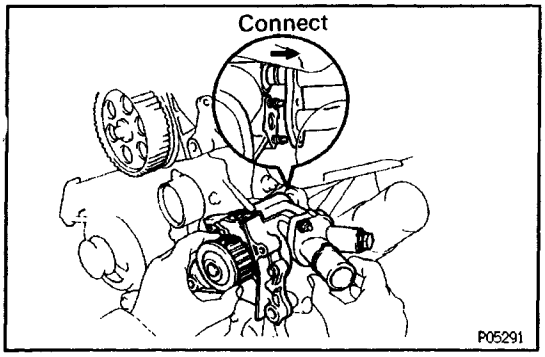

(d) Connect the water pump cover to the water by–pass pipe. Do not install the nuts yet.

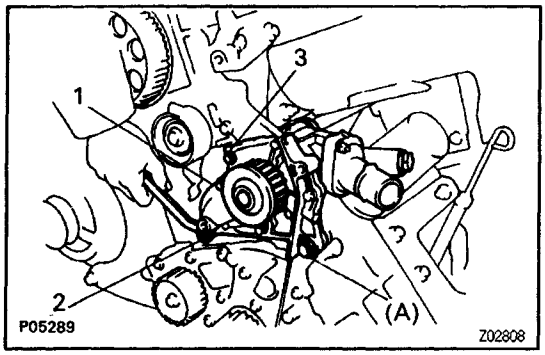

(e) Install the water pump with the three bolts. Tighten the bolts in the sequence shown.
Torque: 8.8 N–m (90 kgf–cm, 78 in.–lbf)
(f) (w/o, A/C)
Install the bolt (A).
Torque: 27 N–m (275 kgf–cm, 20 ft–lbf)

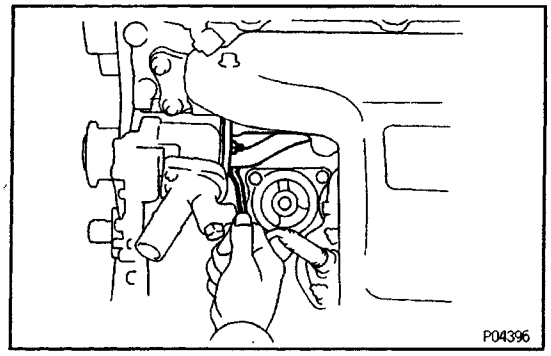

(g) Install the two nuts holding the water pump cover to the water by–pass pipe.
Torque: 9.3 N–m (95 kgf–cm, 82 in.–lbf)

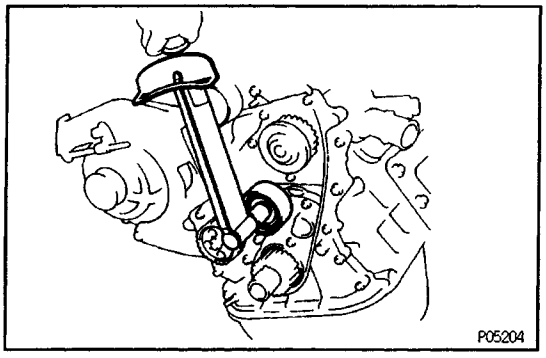

3. INSTALL NO.2 IDLER PULLEY
(a) Install the pulley with the bolt.
Torque: 42 N–m (425 kgf–cm, 31 ft–lbf)
(b) Check that the idler pulley moves smoothly.

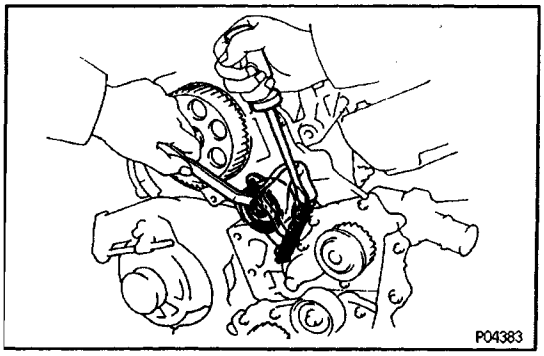

4. INSTALL TIMING BELT TENSION SPRING
(a) Install the tension spring.
(b) Pry the No. 1 pulley toward the left as far as it will go, and tighten the pulley bolt.

5. CONNECT LOWER RADIATOR HOSE TO WATER INLET

6. INSTALL TIMING BELT

(See steps 5 to 19 and 21 to 23 in Timing Belt ' Installation under Engine Mechanical)

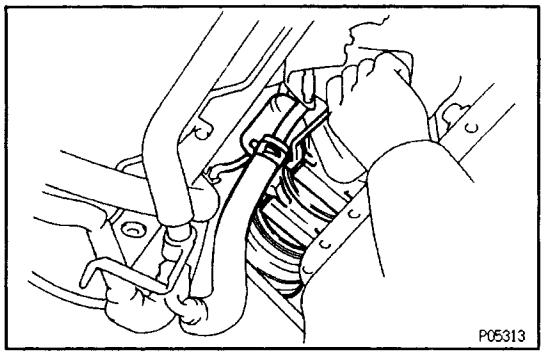

7. INSTALL A/C COMPRESSOR

(a) Temporarily install the A/C compressor with the two bolts

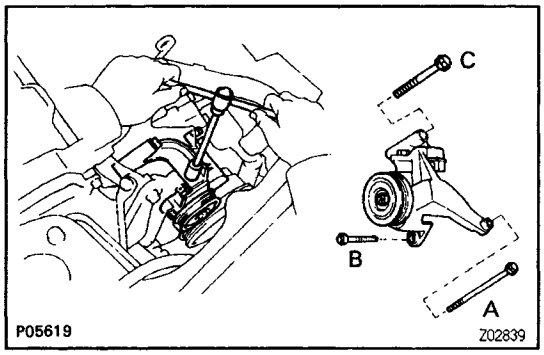

(b) Install the idler pulley bracket with the three bolts.

Torque:

25 N–m (250 kgf–cm, 18 ft–lbf) for A
27 N–m (275 kgf–cm, 20 ft–lbf) for B
37 N–m (375 kgf–cm, 27 ft–lbf) for C

(c) Connect the A/C compressor connector.

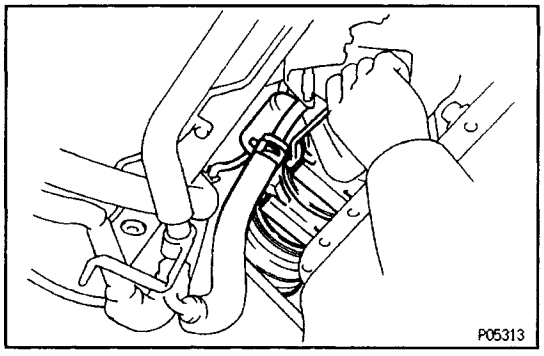

(d) Tighten the two bolts of the lower side of the A/C compressor.

Torque: 25 N–m (250 kgf–cm, 18 ft–lbf)

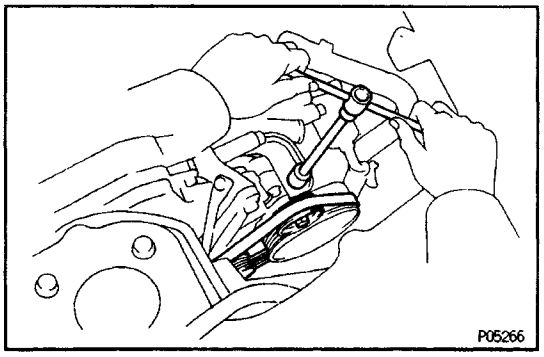

(e) Install the drive belt with the adjusting bolt.

(f) Tighten the idler pulley nut.

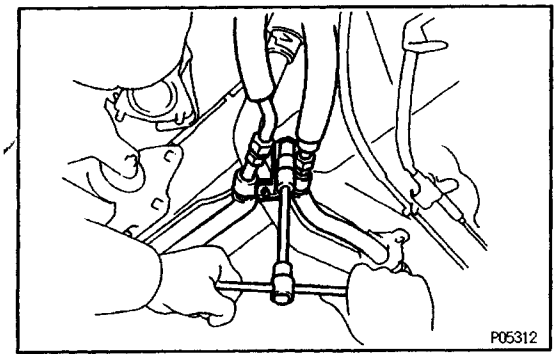

(g) Install the A/C pipes with the two clamps and nut.

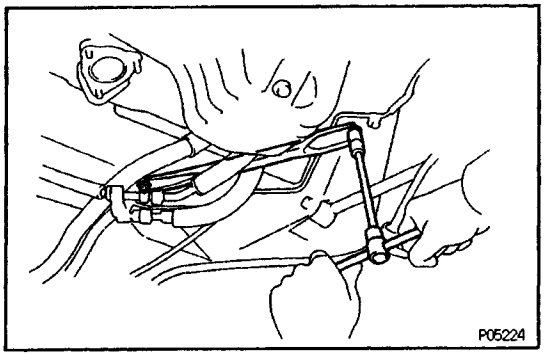

(h) install the lower suspension brace with the two bolts.
Torque: 73 N–m (740 kgf–cm, 54 ft–lbf)

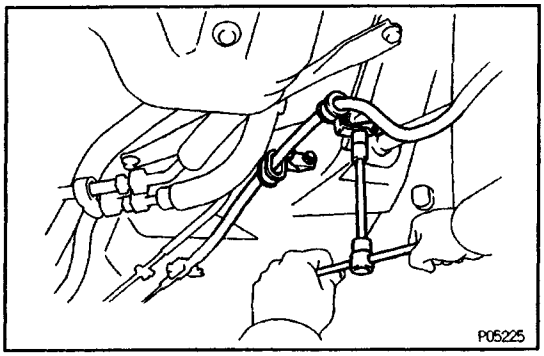

(i) Install the parking brake cable with the two clamps and three bolts.

8. CONNECT CABLE TO NEGATIVE TERMINAL OF BATTERY
9. FILL WITH ENGINE COOLANT
10. START ENGINE AND CHECK FOR COOLANT LEAKS
11. INSTALL RH ENGINE HOOD SIDE PANEL
12. INSTALL ENGINE UNDER COVERS

EXHAUST GAS RECIRCULATION (EGR) SYSTEM

EG066–03

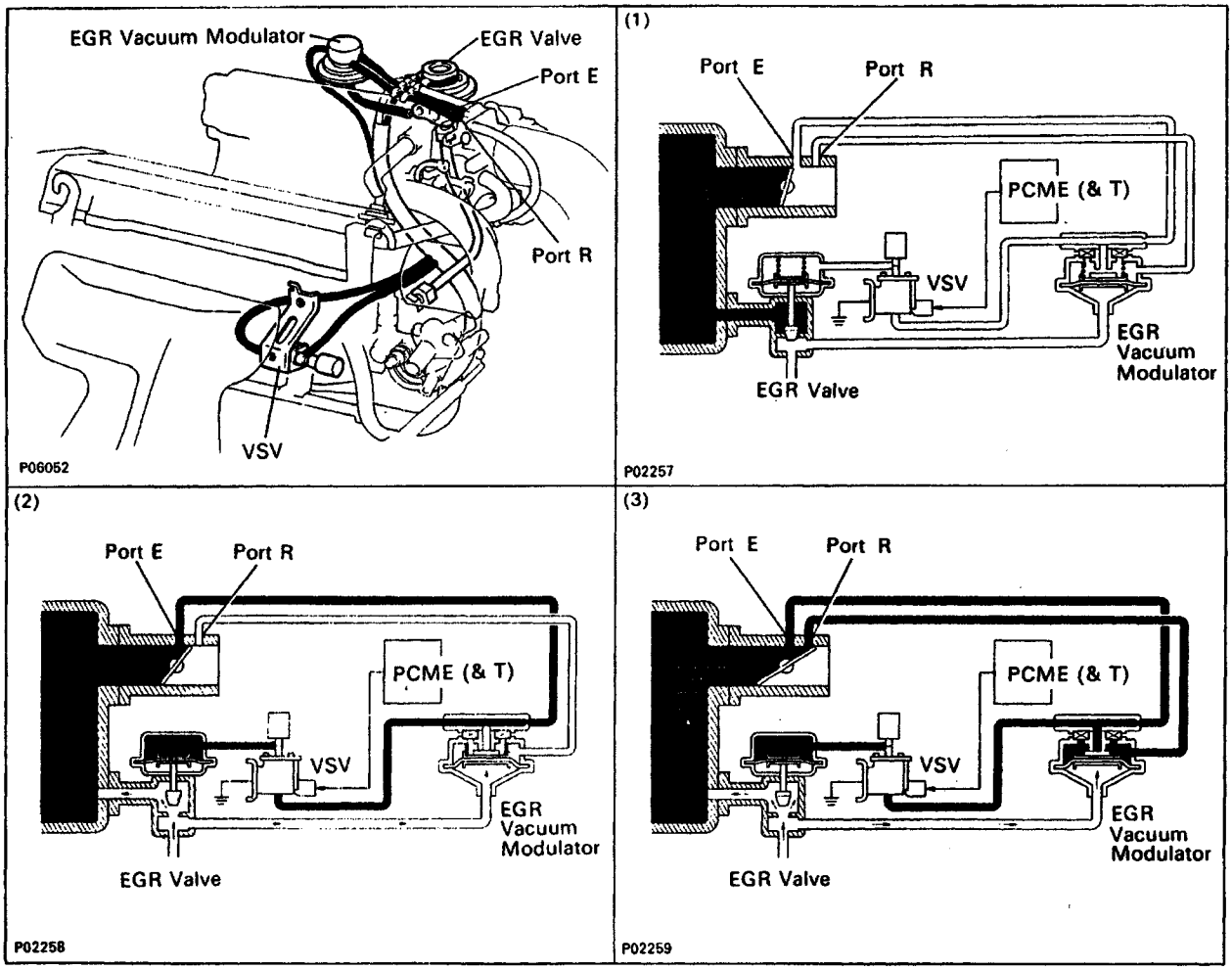

Coolant Temp.	Engine RPM	PIM (PCM)	VSV	Throttle Valve Opening Angle	Pressure in the EGR Valve Pressure Chamber		EGR Vacuum Modulator	EGR Valve	Exhaust Gas
Below 55°C (131°F)	-		CLOSED	-	-		-	CLOSED	Not recirculated
Above 60°C (140°F)	Below 4,000 rpm	OFF	CLOSED	Positioned below port E	-		-	CLOSED	Not recirculated
			CLOSED	Positioned below port E	(1)	-	-	CLOSED	Not recirculated
		... ON	OPEN	Positioned between port E and port R	(2) HIGH	*	CLOSES passage to atmosphere	OPEN	Recirculated
				Positioned above port R	(3) HIGH	**	CLOSES passage to atmosphere	OPEN	Recirculated (increase)
	Above 4,000 rpm	OFF	CLOSED	-	-		-	CLOSED	Not Recirculated

* Pressure increases → Modulator closes → EGR valve opens → Pressure drops → EGR valve closes → Modulator opens →

** When the throttle valve is positioned above port R, the EGR vacuum modulator will close the atmosphere passage and open the EGR valve to increase the exhaust gas, even if the exhaust pressure is insufficiently low.

*** If terminals TE1 and E1 of DLC1 connector are connected, the VSV switches ON.

V01008

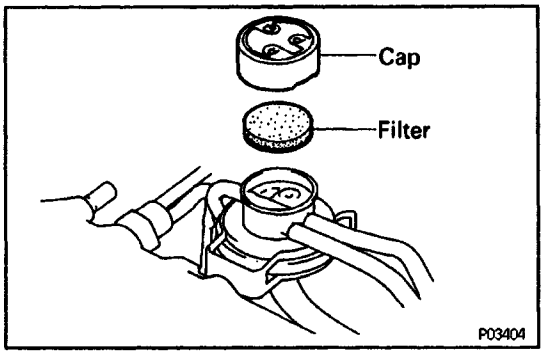

EGR SYSTEM INSPECTION

1. INSPECT AND CLEAN FILTER IN EGR VACUUM MODULATOR

(a) Remove the cap and filter.
(b) Check the filter for contamination or damage.
(c) Using compressed air, clean the filter.
(d) Reinstall the filter and cap.

HINT: Install the filter with the coarser surface facing the atmospheric side (outward).

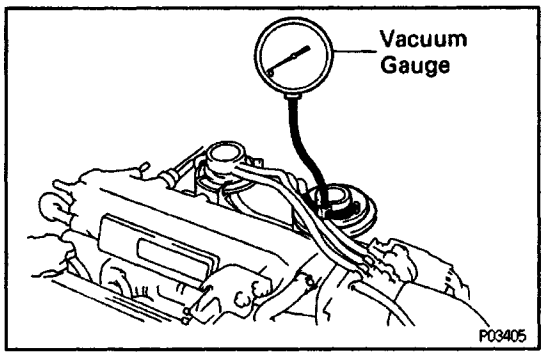

2. INSTALL VACUUM GAUGE

Using a 3–way connector, connect a vacuum gauge to the hose between the EGR valve and VSV.

3. INSPECT SEATING OF EGR VALVE

Start the engine and check that the engine starts and runs at idle.

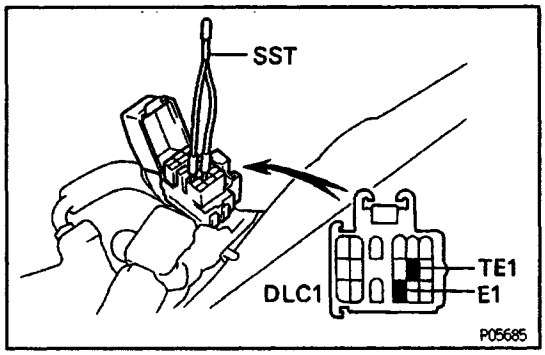

4. CONNECT TERMINALS TE1 AND E1 OF DATA LINK CONNECTOR 1

Using SST, connect terminals TE1 and E1 of the data link connector 1.

SST 09843–18020

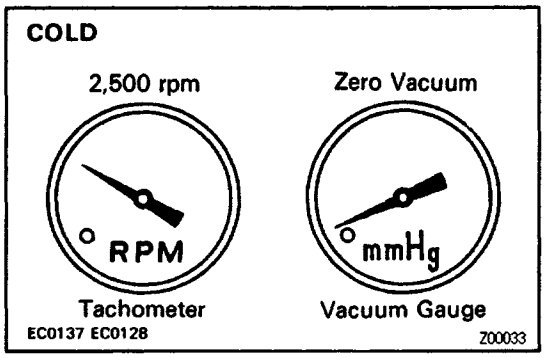

5. INSPECT VSV OPERATION WITH COLD ENGINE

(a) The engine coolant temperature should be below 55°C (131°F).
(b) Check that the vacuum gauge indicates zero at 2,500 rpm.

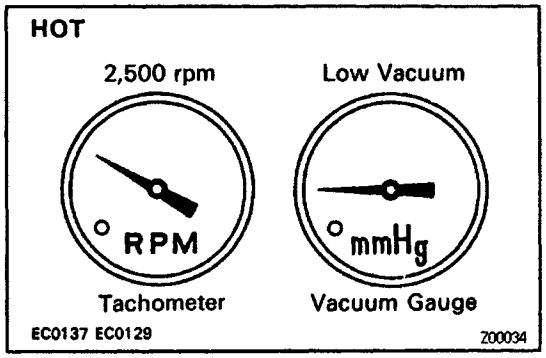

6. INSPECT OPERATION OF VSV AND EGR VACUUM MODULATOR WITH HOT ENGINE

(a) Warm up the engine to above 60°C (140°F).
(b) Check that the vacuum gauge indicates low vacuum at 2,500 rpm.

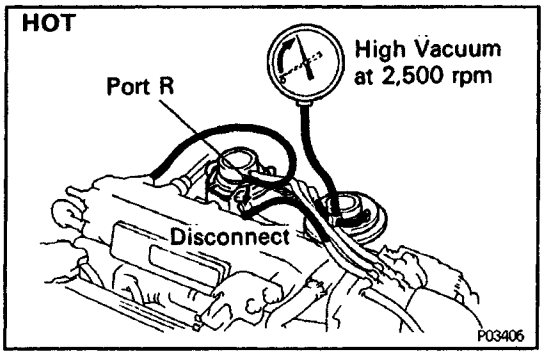

(c) Disconnect the vacuum hose port R of the EGR vacuum modulator and connect port R directly to the intake manifold with another hose.
(d) Check that the vacuum gauge indicates high vacuum at 2,500 rpm.

HINT: As a large amount of exhaust gas enters, the engine will misfire slightly.

7. REMOVE VACUUM GAUGE

Remove the vacuum gauge, and reconnect the vacuum hoses to the proper locations.

8. INSPECT EGR VALVE

(a) Apply vacuum directly to the EGR valve with the¿engine idling.
(b) Check that the engine runs rough or dies.
(c) Reconnect the vacuum hoses to the proper locations.

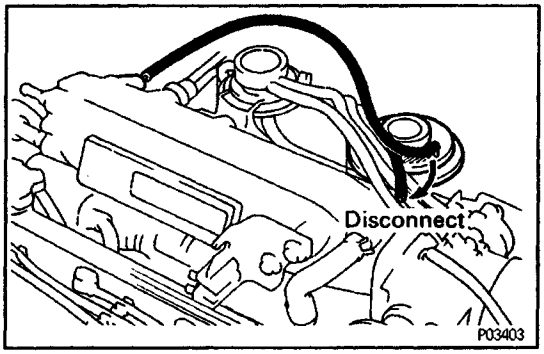

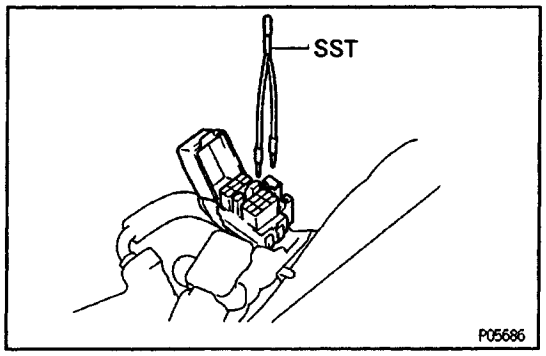

9. REMOVE SST FROM DATA LINK CONNECTOR 1

SST 09843–18020

IF NO PROBLEM IS FOUND WITH THIS INSPECTION, SYSTEM IS NORMAL; OTHERWISE INSPECT EACH PART

EG125–01

VSV INSPECTION

1. REMOVE VSV

(See VSV Removal under MPI System)

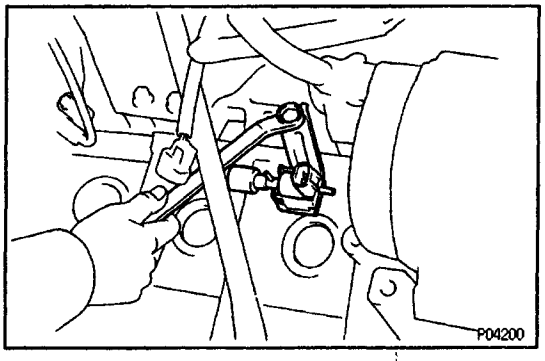

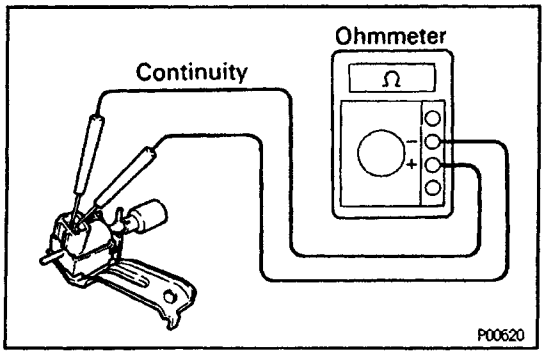

2. Inspect VSV for open circuit

A. Inspect VSV for open circuit

Using an ohmmeter, check that there is continuity between the terminals.

Resistance (Cold):

33–39Ω

If there is no continuity, replace the VSV.

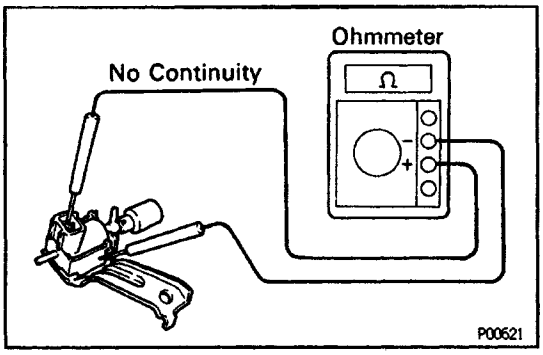

B. Inspect VSV for ground

Using an ohmmeter, check that there is no continuity between each terminal and the body.
If there is continuity, replace the VSV.

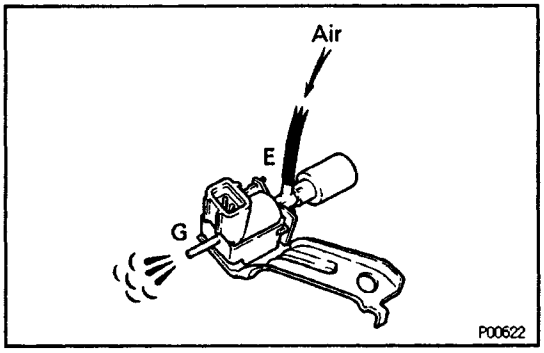

C. Inspect VSV operation

(a) Check that the air flows from port E to port G.

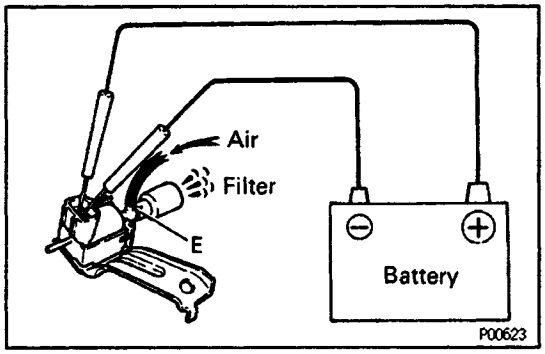

(b) Apply battery voltage across the terminals.
(c) Check that the air flows from port E to the filter.
If operation is not as specified, replace the VSV.

3. REINSTALL VSV

(See VSV Removal under MPI System)

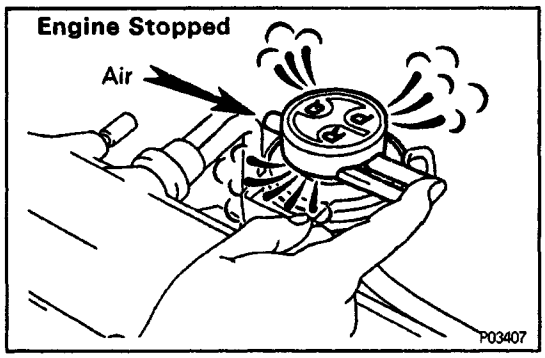

EGR VACUUM MODULATOR INSPECTION

INSPECT EGR VACUUM MODULATOR OPERATION

(a) Disconnect the vacuum hoses from ports P, Q and R of the EGR vacuum modulator.
(b) Block ports P and R with your finger.
(c) Blow air into port Q, and check that the air passes through to the air filter side freely.

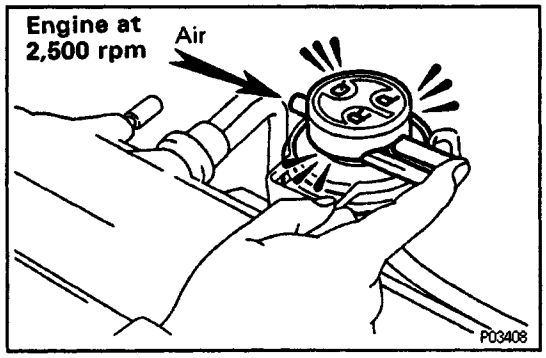

(d) Start the engine, and maintain speed at 2,500 rpm.
(e) Repeat the above test. Check that there is a strong resistance to air flow.
(f) Reconnect the vacuum hoses to the proper locations.

EG128–01

COMPONENTS FOR EGR VALVE REMOVAL AND INSTALLATION

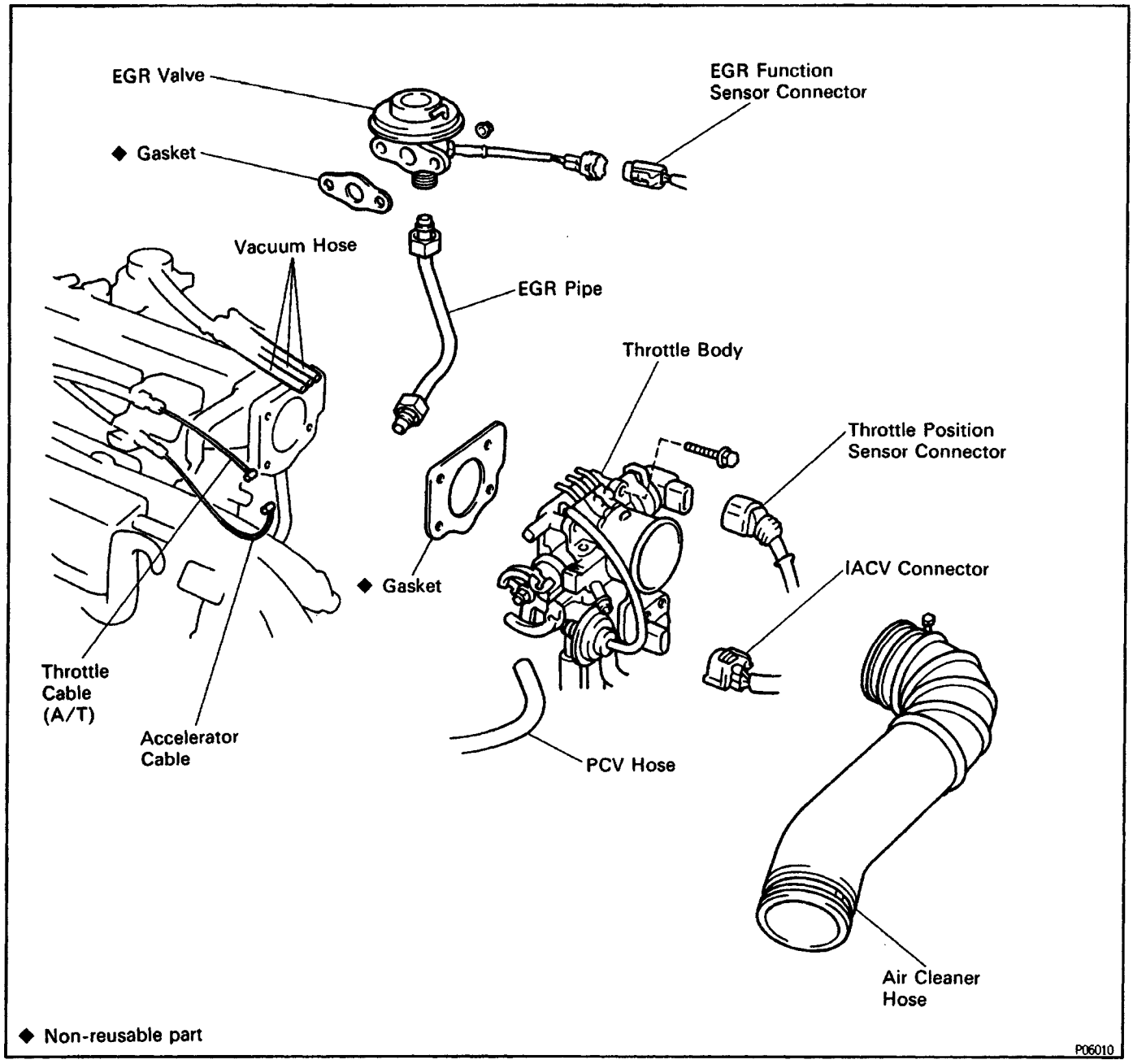

EG12A–01

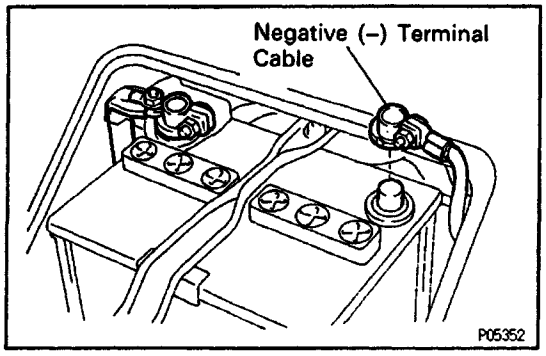

EGR VALVE INSPECTION

(See Components for EGR Valve Removal and Installation)

1. DISCONNECT CAGE FROM NEGATIVE TERMINAL OF BATTERY

CAUTION: Turn the ignition switch to 'LOCK'. Disconnect the negative terminal from the battery. Wait at least 20 seconds before proceeding with work.

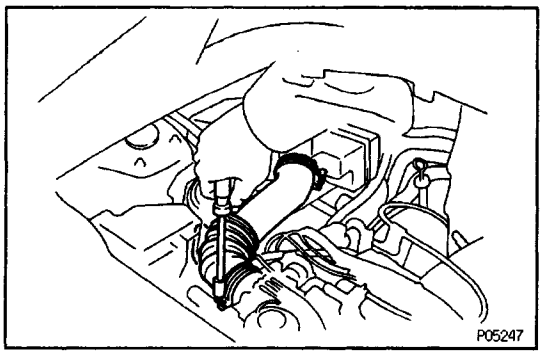

2. REMOVE AIR CLEANER HOSE

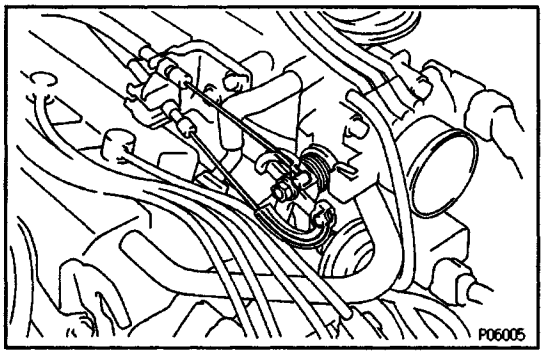

3. DISCONNECT ACCELERATOR CABLE FROM THROTTLE BODY

4. (A/T)
DISCONNECT THROTTLE CABLE FROM THROTTLE BODY

6. DISCONNECT THROTTLE BODY FROM INTAKE MANIFOLD

(a) Disconnect the following connector:

- Throttle position sensor connector
- IACV connector

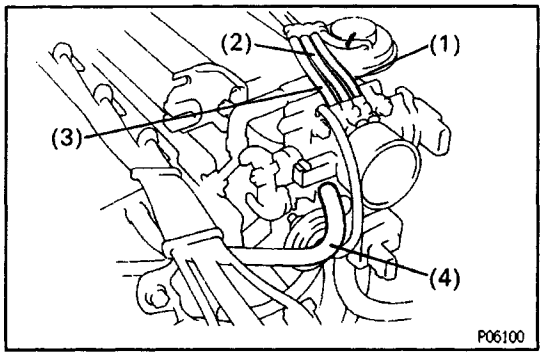

(b) Disconnect the following hoses:
(1) Vacuum hose (from upper port of TVS) from port "P" of throttle body
(2) Vacuum hose (from port "a" of EGR vacuum modulator) from port "E" of throttle body
(3) Vacuum hose (from port "R" of EGR vacuum modulator) from port "R" of throttle body
(4) PCV hose (from cylinder head) from throttle body

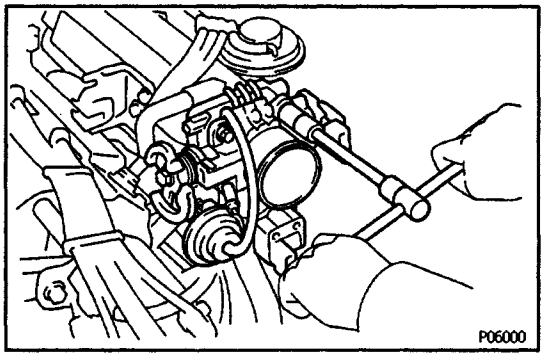

(c) Remove the four bolts, and disconnect the throttle body from the intake manifold.
(d) Remove the throttle body gasket.

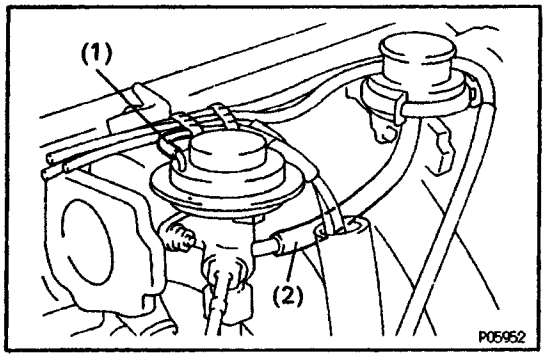

6. REMOVE EGR VALVE

(a) (CALIF. only)
Disconnect the EGR function sensor connector.
(b) Disconnect the following hoses from the EGR valve:
(1) Vacuum hose (from port E of VSV)
(2) EGR hose (from vacuum modulator)

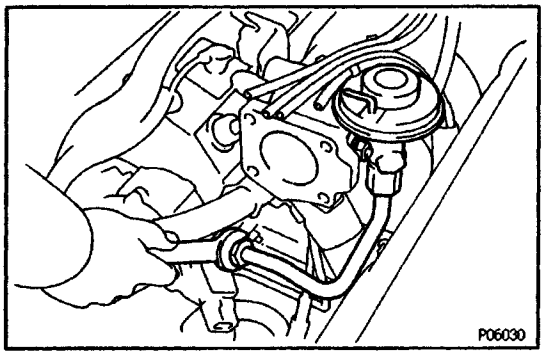

(c) Loosen the two union nuts.
(d) Remove the two nuts, EGR valve and gasket.

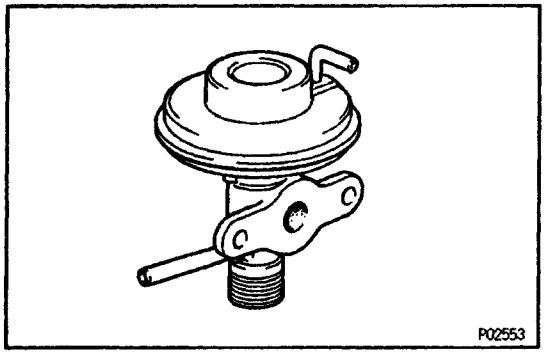

7. INSPECT EGR VALVE

Check for sticking and heavy carbon deposits.
If a problem is found, replace the valve.

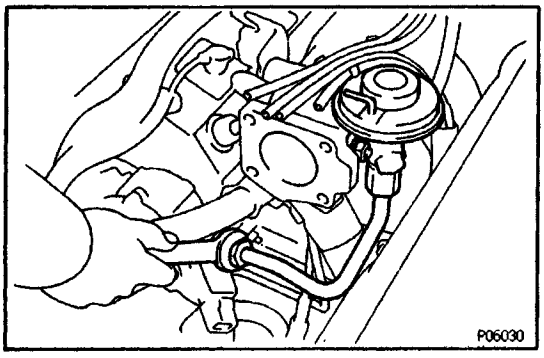

8. REINSTALL EGR VALVE

(a) Install a new gasket and the EGR valve with the two nuts.
Torque: 13 N–m (130 kgf–cm, 9 ft–lbf)
(b) Install the EGR pipe with the two union nuts.
Torque: 59 N–m (600 kgf–cm, 43 ft–lbf)

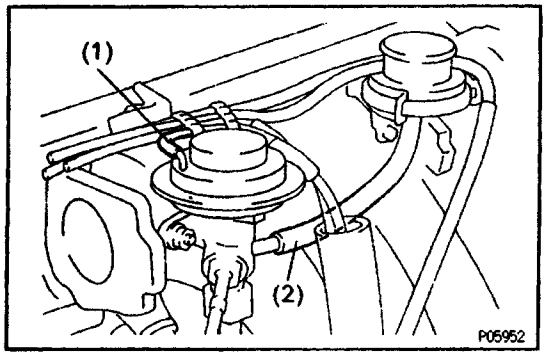

(c) Connect the following hoses to the EGR valve:
(1) Vacuum hose (from port E of VSV)
(2) EGR hose (from vacuum modulator)
(d) (CALIF. only)
Reconnect the EGR function sensor connector.

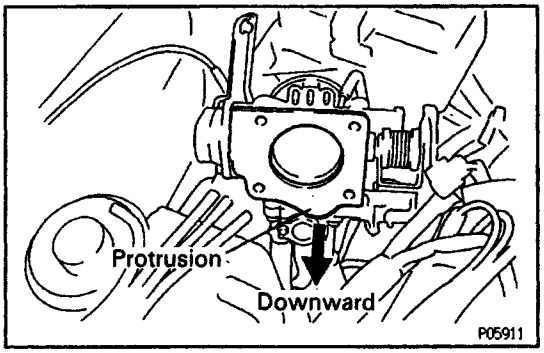

9. INSTALL THROTTLE BODY

(a) Install a new gasket on the throttle body, facing the protrusion downward.

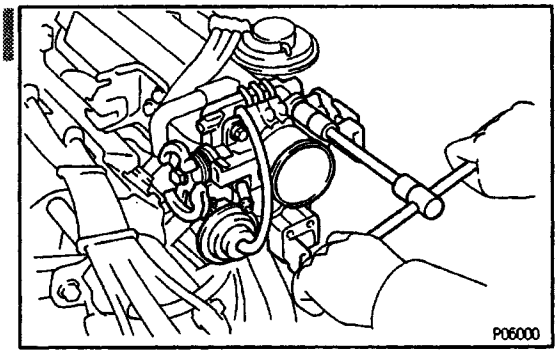

(b) Install the throttle body with the four bolts.

Torque: 19 N–m (195 kgf–cm, 14 ft–lbf)

HINT: Different bolt lengths are used for the upper and lower sides.

Bolt length:

45 mm (1.77 in.) for upper side

55 mm (2.17 in.) for lower side

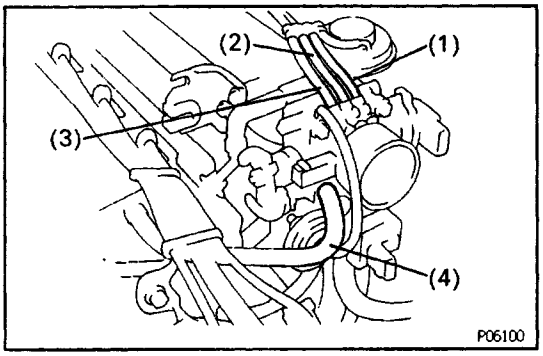

(c) Connect the following hoses:

(1) Vacuum hose (from upper port of TVS) to port ”P” of throttle body

(2) Vacuum hose (from port ”Q” of EGR vacuum modulator) to port ”E” of throttle body

(3) Vacuum hose (from port ”R” of EGR vacuum modulator) to port ”R” of throttle body

(4) PCV hose (from cylinder head) to throttle body

(d) Reconnect the following connector:

- Throttle position sensor connector
- IACV connector

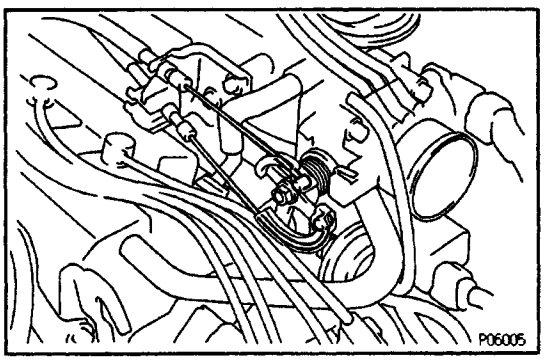

10. CONNECT ACCELERATOR CABLE TO THROTTLE BODY

11. (A/T)

CONNECT THROTTLE CABLE TO THROTTLE BODY

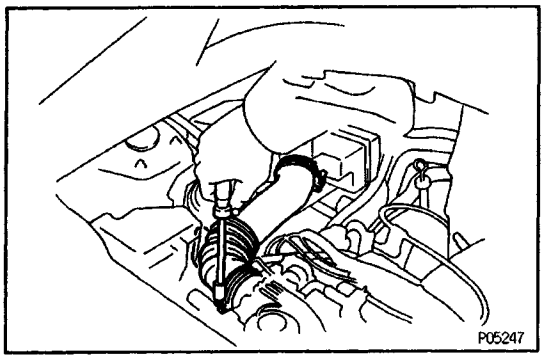

12. REINSTALL AIR CLEANER HOSE

13. RECONNECT CABLE TO NEGATIVE TERMINAL OF BATTERY

FUEL EVAPORATIVE SYSTEM (EVAP)

EG063–03

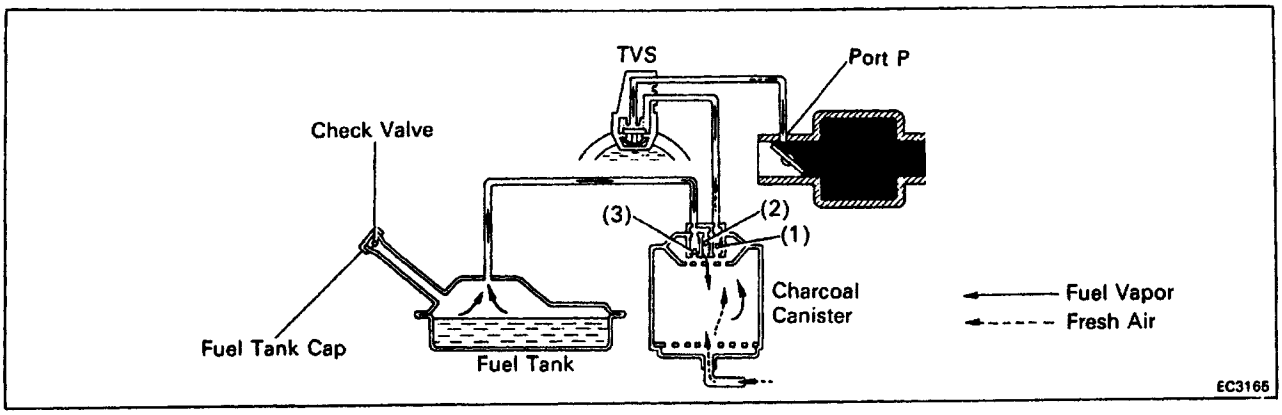

To reduce HC emission, evaporated fuel from the fuel tank is routed through the charcoal canister to the intake manifold for combustion in the cylinders.

Coolant Temp.	TVS	Throttle Valve Opening	Canister Check Valve			Check Valve in Cap	Evaporated Fuel (HC)
			(1)	(2)	(3)		
Below 35˚C (95˚F)	CLOSED	–	–	–	–	–	HC from tank is absorbed into the canister.
Above 54˚C (129˚F)	OPEN	Positioned below port P	CLOSED	–	–	–	
		Positioned above port P	OPEN	–	–	–	HC from canister is led into air intake manifold.
High pressure in tank	–	–	–	OPEN	CLOSED	CLOSED	HC from tank is absorbed into the canister.
High vacuum in tank	–	–	–	CLOSED	OPEN	OPEN	Air is led into the fuel tank.

V01044

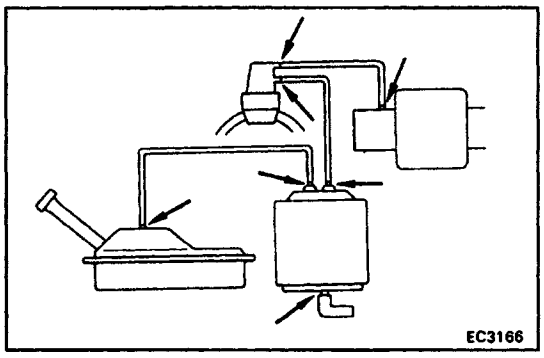

EG064–03

FUEL VAPOR LINES, FUEL TANK AND TANK CAP INSPECTION

1. VISUALLY INSPECT LINES AND CONNECTIONS

Look for loosen connections, sharp bends or damage.

2. VISUALLY INSPECT FUEL TANK

Look for deformation, cracks or fuel leakage.

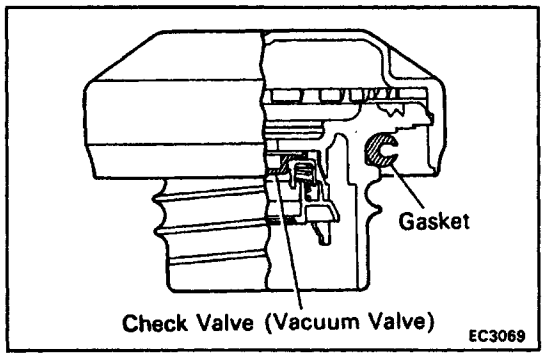

3. VISUALLY INSPECT FUEL TANK CAP

Check if the cap and/or gasket are deformed or damaged.

If necessary, repair or replace the cap.

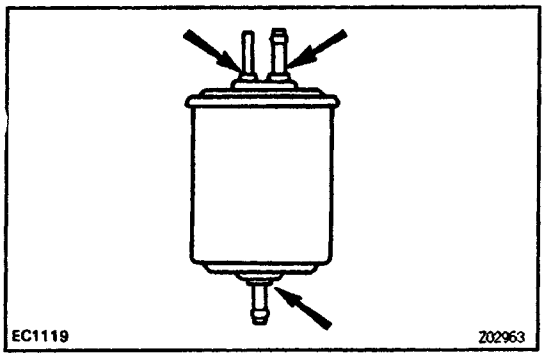

CHARCOAL CANISTER INSPECTION

EG11Y–01

1. REMOVE CHARCOAL CANISTER

2. REMOVE CAP FROM CHARCOAL CANISTER

3. VISUALLY INSPECT CHARCOAL CANISTER

Lock for cranks or damage.

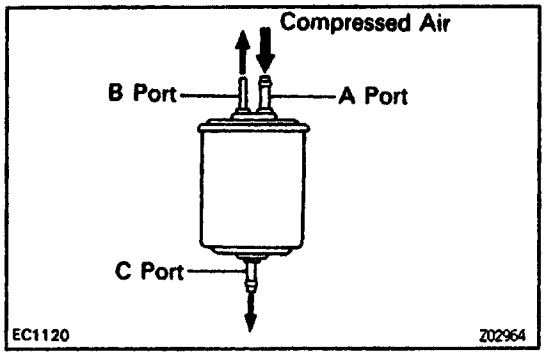

4. INSPECT FOR CLOGGED FILTER AND STUCK CHECK VALVE

(a) Using low pressure compressed air, blow into port A and check that air flows without resistance from the other ports.

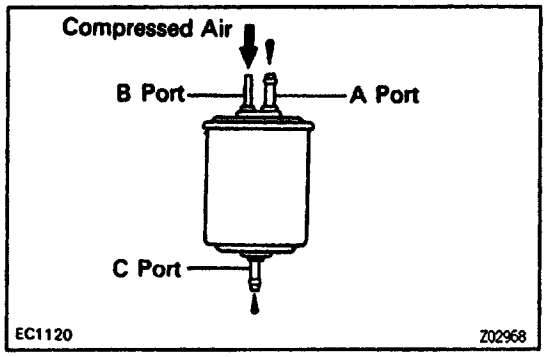

(b) Blow into port Band check that air does not flow from the other ports.

If operation is not as specified, replace the charcoal canister.

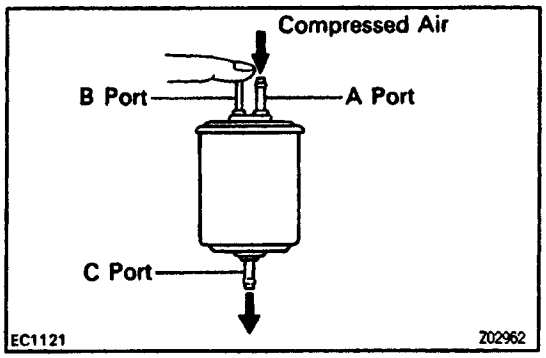

5. CLEAN FILTER IN CANISTER

Clean the filter by blowing 294 kPa (3 kgf/cm2, 43 psi) of compressed air into port A while holding port B closed.

NOTICE:

- **Do not attempt to wash the canister.**
- **No activated carbon should some out.**

6. REINSTALL CAP TO CHARCOAL CANISTER

7. REINSTALL CHARCOAL CANISTER

EG120–01

TVS INSPECTION

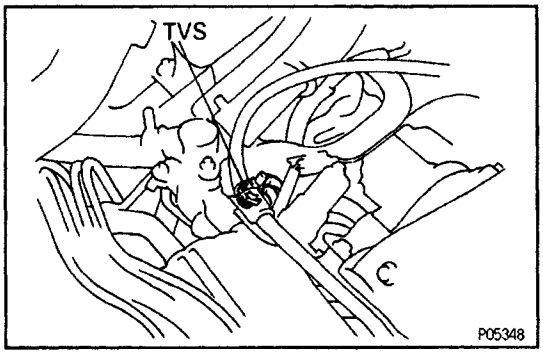

1. DRAIN ENGINE COOLANT

2. REMOVE TVS FROM WATER OUTLET

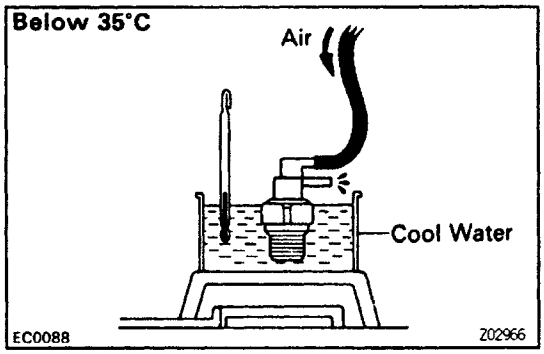

3. INSPECT TVS OPERATION

(a) Cool the TVS to below 35°C (95°F) with cool water.

(b) Check that air does not flow from the upper port to lower port.

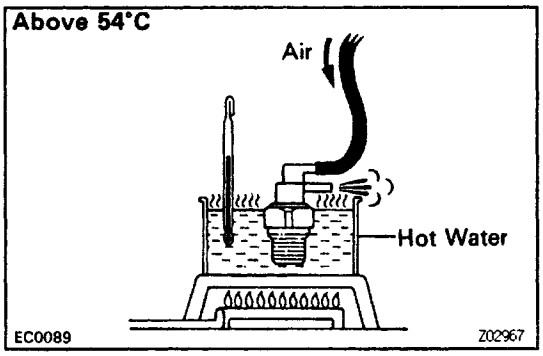

(c) Heat the TVS to above 54°C (129°F) with hot water.

(d) Check that air flows from the upper port to lower port.

If operation is not as specified, replace the TVS.

4. REINSTALL TVS

Apply adhesive to two or three threads of the TVS, and install it.

Adhesive:

Part No. 08833–00070, THREE BOND 1324 or equivalent

Torque: 29 N–m (300 kgf–cm, 22 ft–lbf)

5. REFILL WITH ENGINE COOLANT

LAYOUT AND SCHEMATIC DRAWING

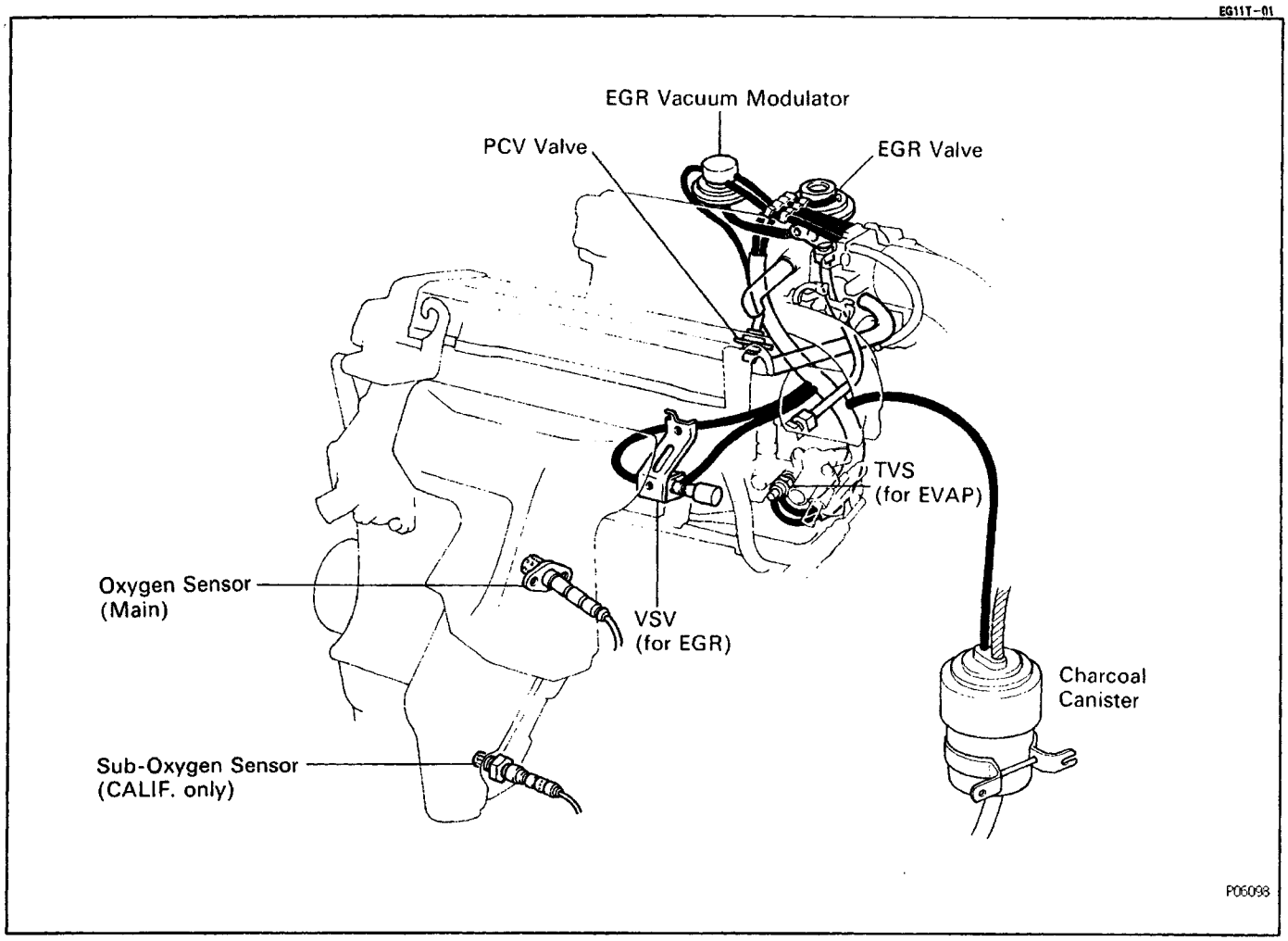

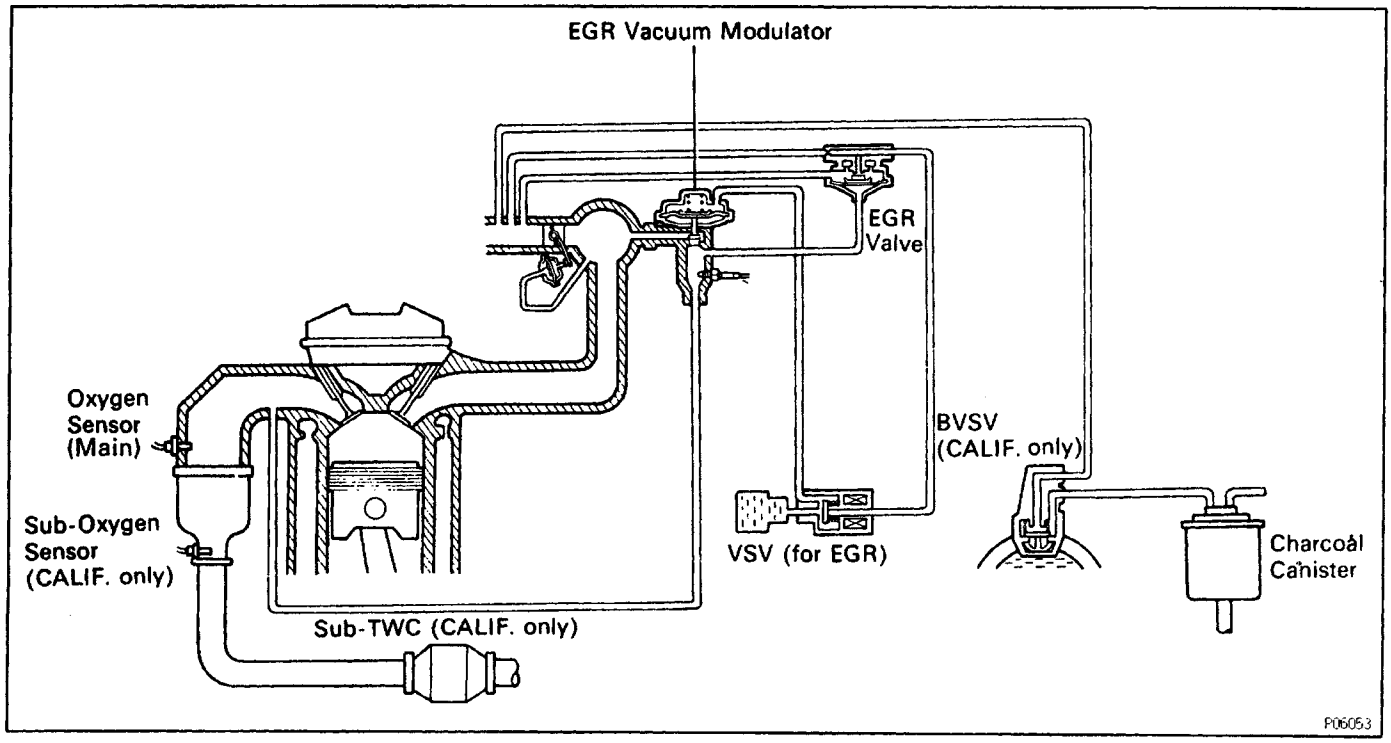

POSITIVE CRANKCASE VENTILATION (PCV) SYSTEM

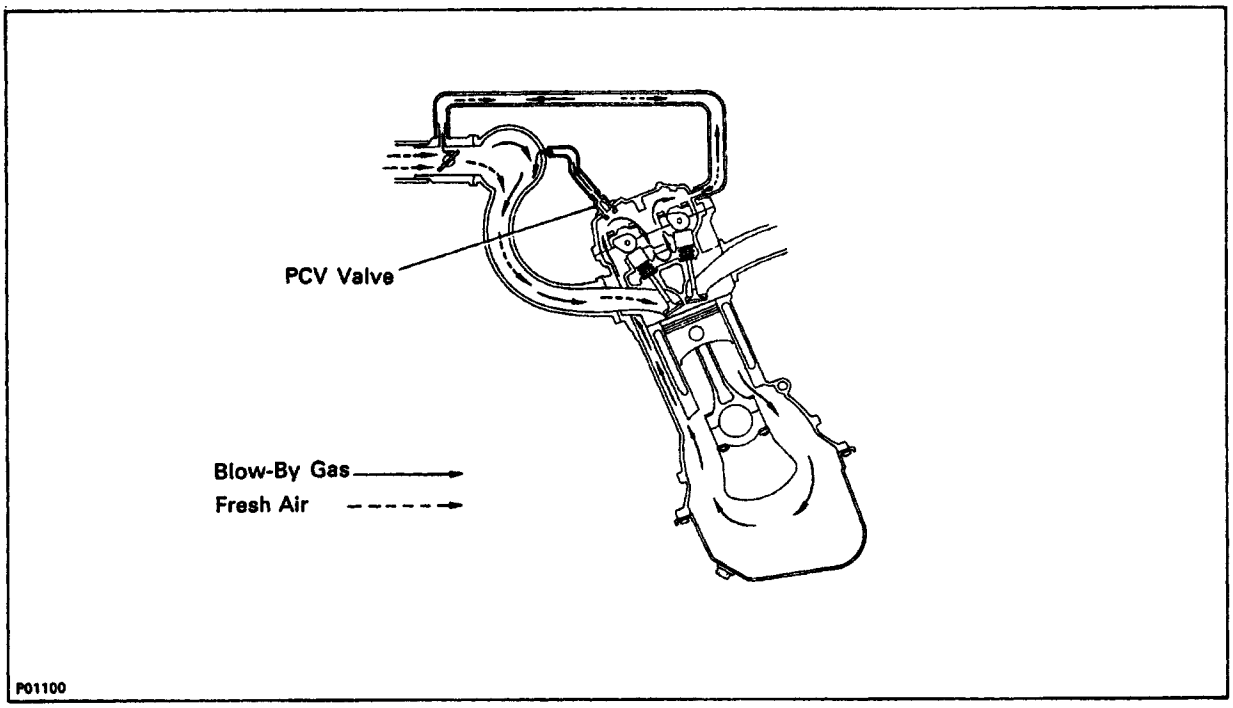

To reduce HC emissions, crankcase blow-by gas (HC) is routed through the PCV valve to the intake manifold for combustion in the cylinders.

Engine not Running or If Backfiring

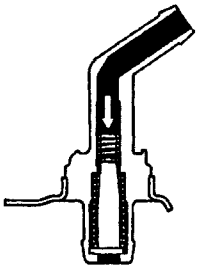

- PCV VALVE IS CLOSED.

Normal Operation

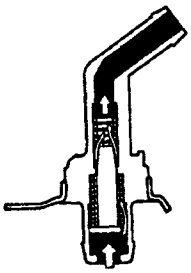

- PCV VALVE IS OPEN.
- VACUUM PASSAGE IS LARGE.

Idling or Decelerating

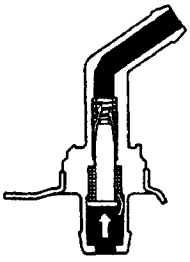

- PCV VALVE IS OPEN.
- VACUUM PASSAGE IS SMALL.

Acceleration or High Load

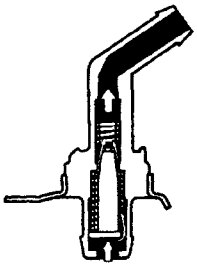

- PCV VALVE IS FULLY OPEN.

V01007

EG061–02

PCV VALVE INSPECTION

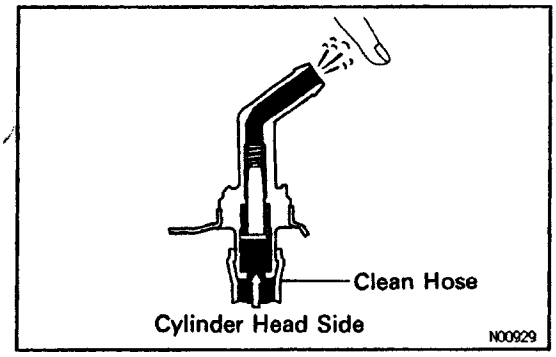

1. REMOVE PCV VALVE

2. INSTALL CLEAN HOSE TO PCV VALVE

3. INSPECT PCV VALVE OPERATION

(a) Blow into the cylinder head side, and check that air passes through easily.

CAUTION: Do not suck air through the valve. Petroleum substances inside the valve are harmful.

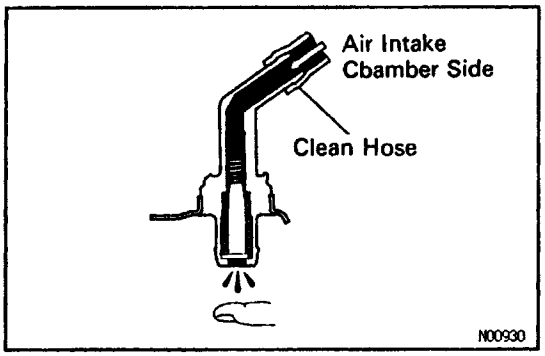

(b) Blow air into the intake manifold side, and check that air passes through with difficulty.

If operation is not as specified, replace the PCV valve.

4. REMOVE CLEAN HOSE FROM PCV VALVE

5. REINSTALL PCV VALVE

EG062–03

PCV HOSES AND CONNECTIONS INSPECTION

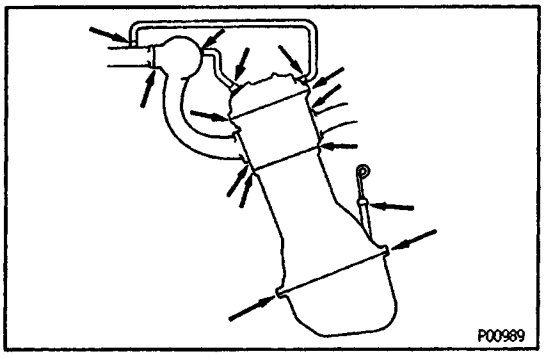

VISUALLY INSPECT HOSES AND CONNECTIONS

Check for cracks, leaks or damage.

EMISSION CONTROL SYSTEMS

SYSTEM PURPOSE

E0687–03

System	Abbreviation	Purpose
Positive crankcase ventilation	PCV	Reduces blow–by gas (HC)
Fuel evaporative emission control	EVAP	Reduces evaporative HC
Exhaust gas recirculation	EGR	Reduces NOx
Three–way catalyst	TWC	Reduces HC, CO and NOx
Electronic fuel injection*	MPI	Regulates all engine conditions for reduction of exhaust emissions.

* For inspection and repair of the MPI system, refer to MPI Section.

V01052

PREPARATION

E0685U–01

SST (SPECIAL SERVICE TOOLS)

09843–18020 Diagnosis Check Wire 	

E0685V–01

RECOMMENDED TOOLS

09082–00015 TOYOTA Electrical Tester 	

E0685W–03

EQUIPMENT

Heater	TVS
Thermometer	TVS
Tachometer	
Torque wrench	
Vacuum gauge	

E0685X–03

SSM (SPECIAL SERVICE MATERIALS)

08833–00070 Adhesive 1324, THREE BOND 1324 or equivalent	TVS

SERVICE SPECIFICATIONS

EG06P–03

SERVICE DATA

VSV (for EGR)	Resistance (at 20°C (68°F))	33 – 39 Ω

EG06Q–03

TORQUE SPECIFICATIONS

Part tightened	N·m	kgf·cm	ft·lbf
TVS x Water outlet housing	29	300	22
EGR valve x Intake manifold	13	130	9
EGR valve x EGR pipe	13	130	9
EGR pipe x Cylinder head	59	600	43
Throttle body x Intake manifold	19	195	14
TWC (main) x Exhaust manifold	29	300	22
TW C stay x TW C (main)	42	425	31
TWC stay x Cylinder block	42	425	31
Suspension member damper x Suspension crossmember	21	210	15
Tailpipe x Front exhaust pipe	43	440	32
Tailpipe bracket x Front exhaust pipe bracket	19	190	14

EMISSION CONTROL SYSTEMS

SYSTEM PURPOSE

E0687–03

System	Abbreviation	Purpose
Positive crankcase ventilation	PCV	Reduces blow–by gas (HC)
Fuel evaporative emission control	EVAP	Reduces evaporative HC
Exhaust gas recirculation	EGR	Reduces NOx
Three–way catalyst	TWC	Reduces HC, CO and NOx
Electronic fuel injection*	MPI	Regulates all engine conditions for reduction of exhaust emissions.

* For inspection and repair of the MPI system, refer to MPI Section.

V01052

PREPARATION

E0685U–01

SST (SPECIAL SERVICE TOOLS)

09843–18020 Diagnosis Check Wire 	

E0685V–01

RECOMMENDED TOOLS

09082–00015 TOYOTA Electrical Tester 	

E0685W–03

EQUIPMENT

Heater	TVS
Thermometer	TVS
Tachometer	
Torque wrench	
Vacuum gauge	

E0685X–03

SSM (SPECIAL SERVICE MATERIALS)

08833–00070 Adhesive 1324, THREE BOND 1324 or equivalent	TVS

THREE–WAY CATALYST (TWC) SYSTEM

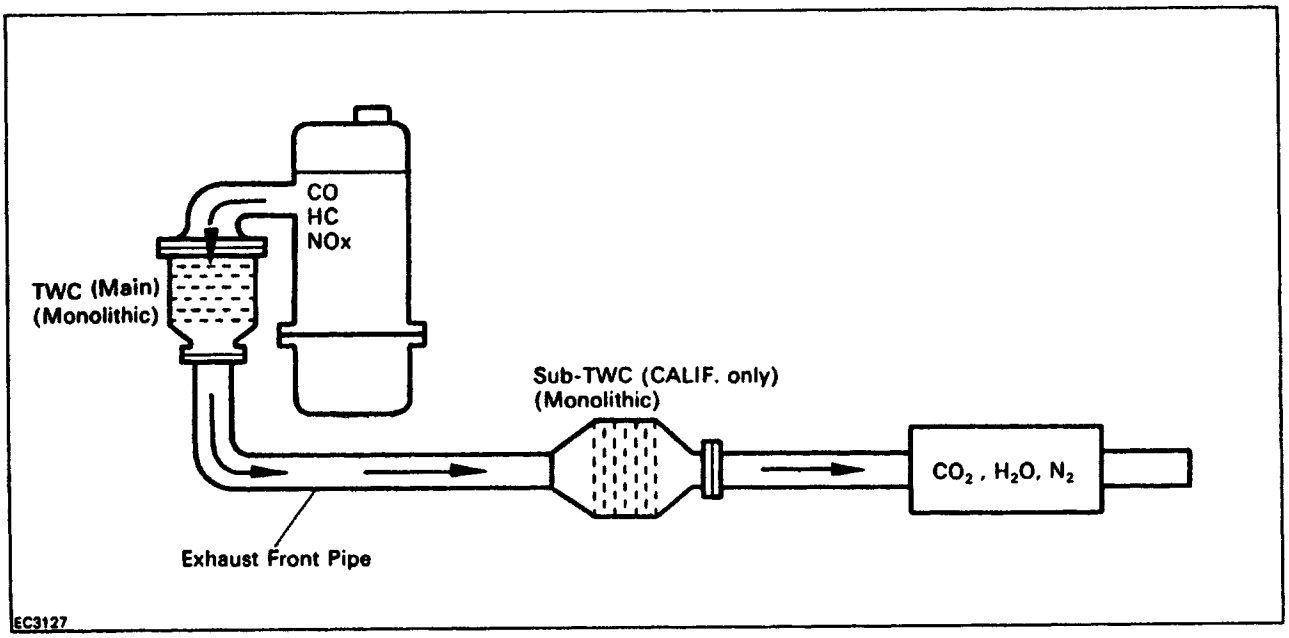

To reduce CO, HC and NOx emissions, they are oxidized, reduced and converted to carbon dioxide (CO_2), water (H_2O) and nitrogen (N_2) by the catalyst.

Exhaust Port		TWC (Main)		Sub-TWC (CALIF. only)		Exhaust Gas
CO HC NOx	→	OXIDATION AND REDUCTION	→	OXIDATION AND REDUCTION	→	CO_2 H_2O N_2

V01006

EXHAUST PIPE ASSEMBLY INSPECTION

1. CHECK CONNECTIONS FOR LOOSENESS OR DAMAGE
2. CHECK CLAMPS FOR WEAKNESS, CRACKS OR DAMAGE

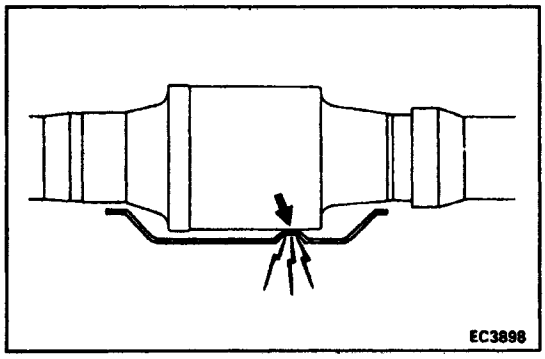

SUB–TWC INSPECTION (CALIF. only)

INSPECT FOR DENTS OR DAMAGE

If any part of protector is damaged or dented to the extent that it contacts the sub–TWC, repair or replace it.

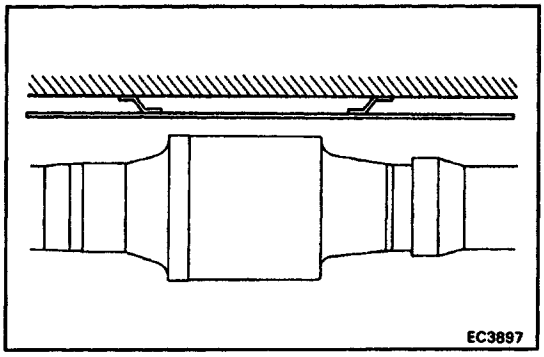

SUB–TWC HEAT INSULATOR INSPECTION (CALIF. only)

1. INSPECT HEAT INSULATOR FOR DAMAGE
2. INSPECT FOR ADEQUATE CLEARANCE BETWEEN CATALYTIC CONVERTER AND HEAT INSULATOR

COMPONENTS FOR TWC (MAIN) REMOVAL AND INSTALLATION

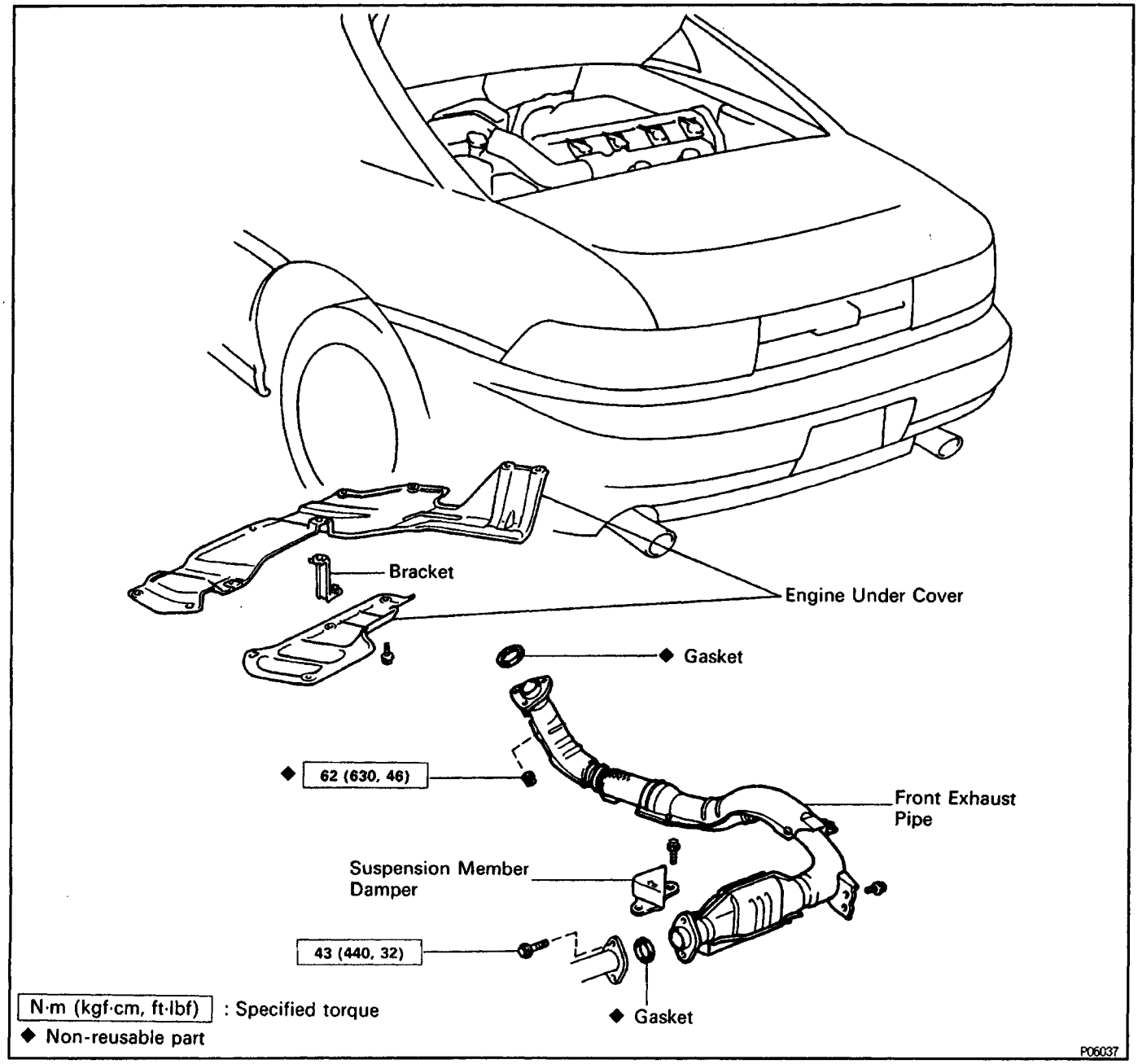

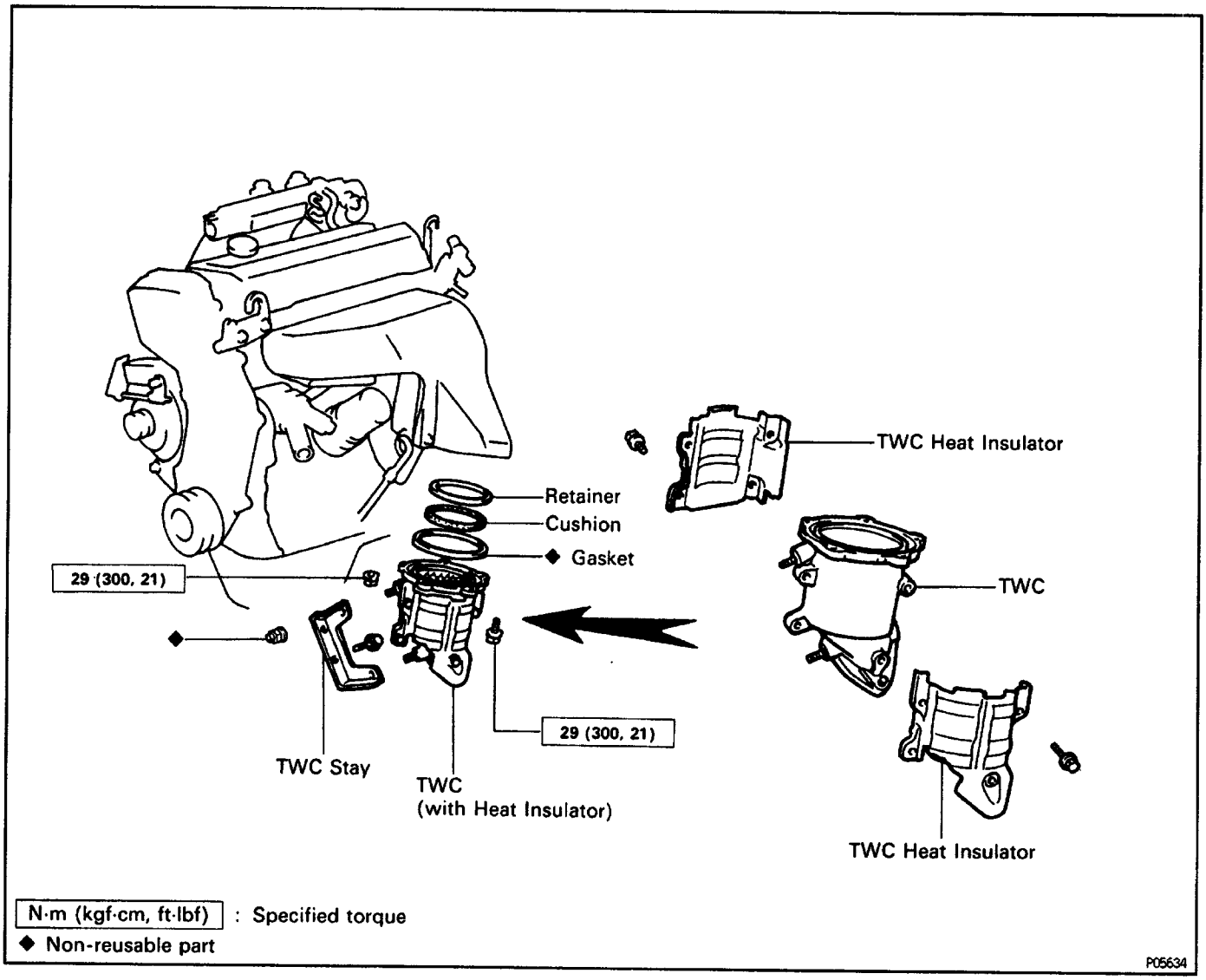

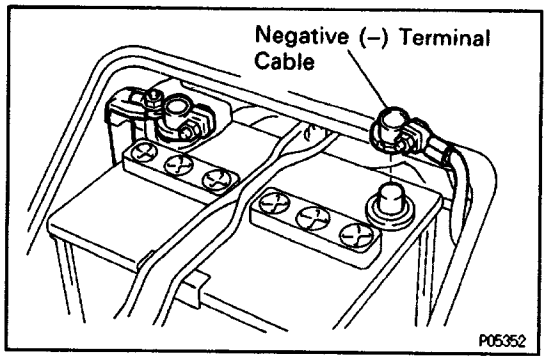

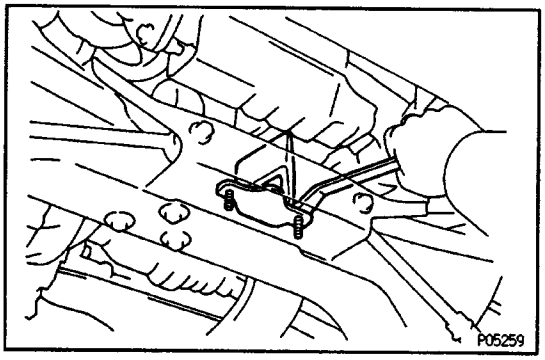

TWC (MAIN) REPLACEMENT

(See Components for Main (TWC) Removal and Installation)

CAUTION: Check that the TWC Is cool.

1. DISCONNECT CABLE FROM NEGATIVE TERMINAL OF BATTERY

CAUTION: Turn the ignition switch to "LOCK". Disconnect the negative terminal from the battery. Wait at least 20 seconds before proceeding with work.

2. REMOVE ENGINE UNDER COVERS

3. REMOVE FRONT EXHAUST PIPE

(a) (CALIF. only)

Remove the two bolts and damper.

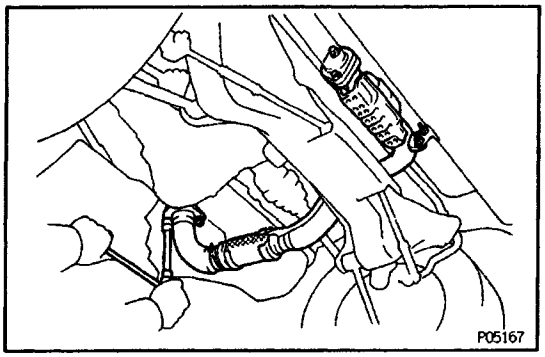

(b) Remove the two bolts holding the front exhaust pipe to the tailpipe bracket.
(c) Remove the two bolts holding the front exhaust pipe to the tailpipe.
(d) Using a 14 mm deep socket wrench, remove the three nuts.
(e) Remove the front exhaust pipe and two gaskets.

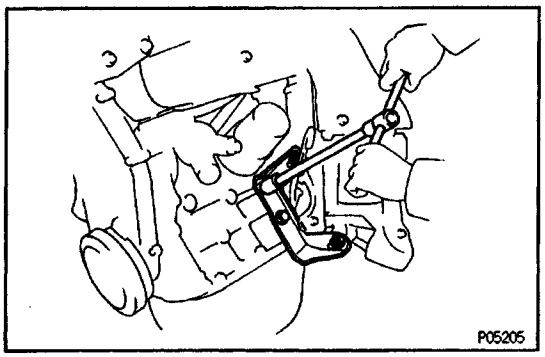

4. REMOVE TWC

(a) Remove the oxygen sensor and sub–oxygen sensor (CALIF. only) from the TWC.
(b) Remove the two bolts, two nuts and TWC stay.

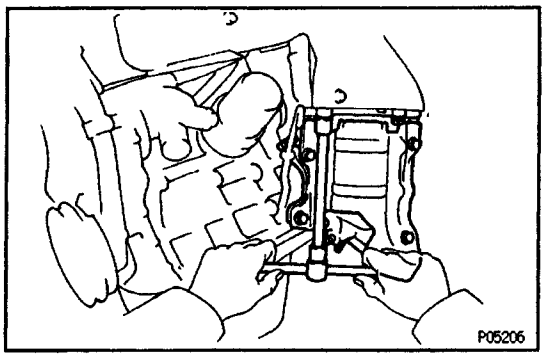

(c) Remove the three bolts, two nuts, TWC, gasket, re–tainer and cushion.

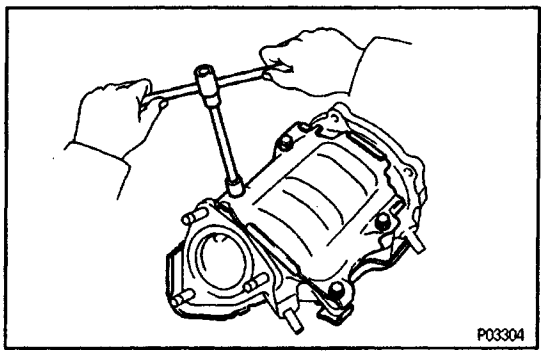

(d) Remove the eight bolts and two heat insulators from the TWC.

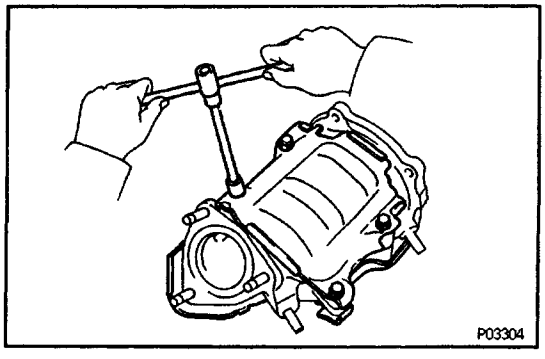

5. REINSTALL TWC

(a) Install the two heat insulators to a new TWC with the eight bolts.

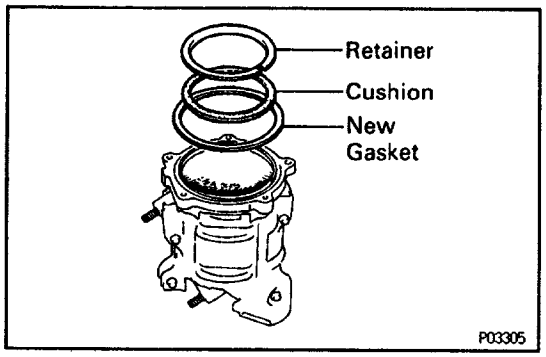

(b) Place the cushion, retainer and a new gasket on the TWC.

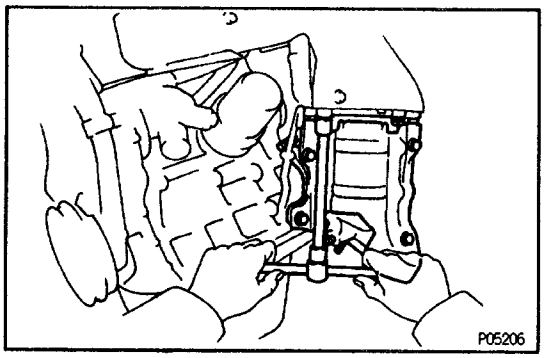

(c) Install the TWC with the three bolts and two nuts.
Torque: 29 N–m (300 kgf–cm. 21 ft–lbf)

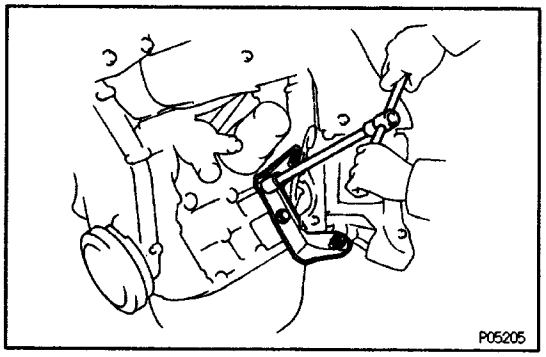

(d) Install the TWC stay with the two bolts and two new nuts.
Torque: 42 N–m (425 kgf–cm, 31 ft–lbf)
(e) Install the oxygen sensor and sub–oxygen sensor (CALIF. only) to the TWC.

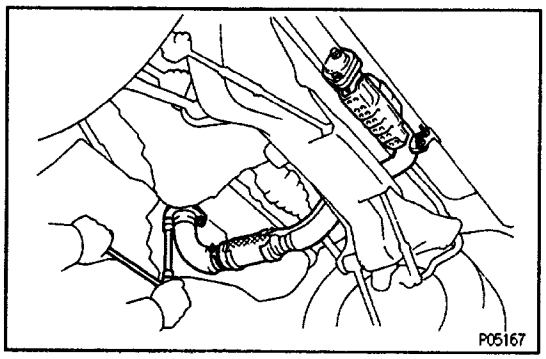

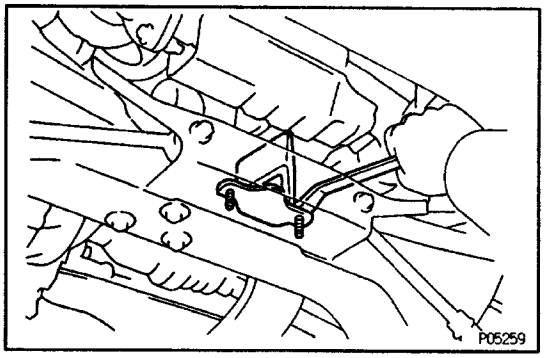

6. REINSTALL FRONT EXHAUST PIPE
(a) Place two new gaskets to the front and rear of the front exhaust pipe.
(b) Using a 14 mm deep socket wrench, install the front exhaust pipe with three new nuts.
Torque: 62 N–m (630 kgf–cm, 46 ft–lbf)
(c) Install the two bolts holding the front exhaust pipe to the tailpipe.
Torque: 43 N–m (440 kgf–cm, 32 ft–lbf)
(d) Install the two bolts holding the front exhaust pipe bracket to the tailpipe bracket.
Torque: 19 N–m (190 kgf–cm, 14 ft–lbf)
(e) Install the damper with the two bolts.
Torque: 21 N–m (210 kgf–cm, 15 ft–lbf)
7. REINSTALL ENGINE UNDER COVERS
8. RECONNECT CABLE TO NEGATIVE TERMINAL OF BATTERY

COMPONENTS FOR SUB–TWC REMOVAL AND INSTALLATION (CALIF. only)

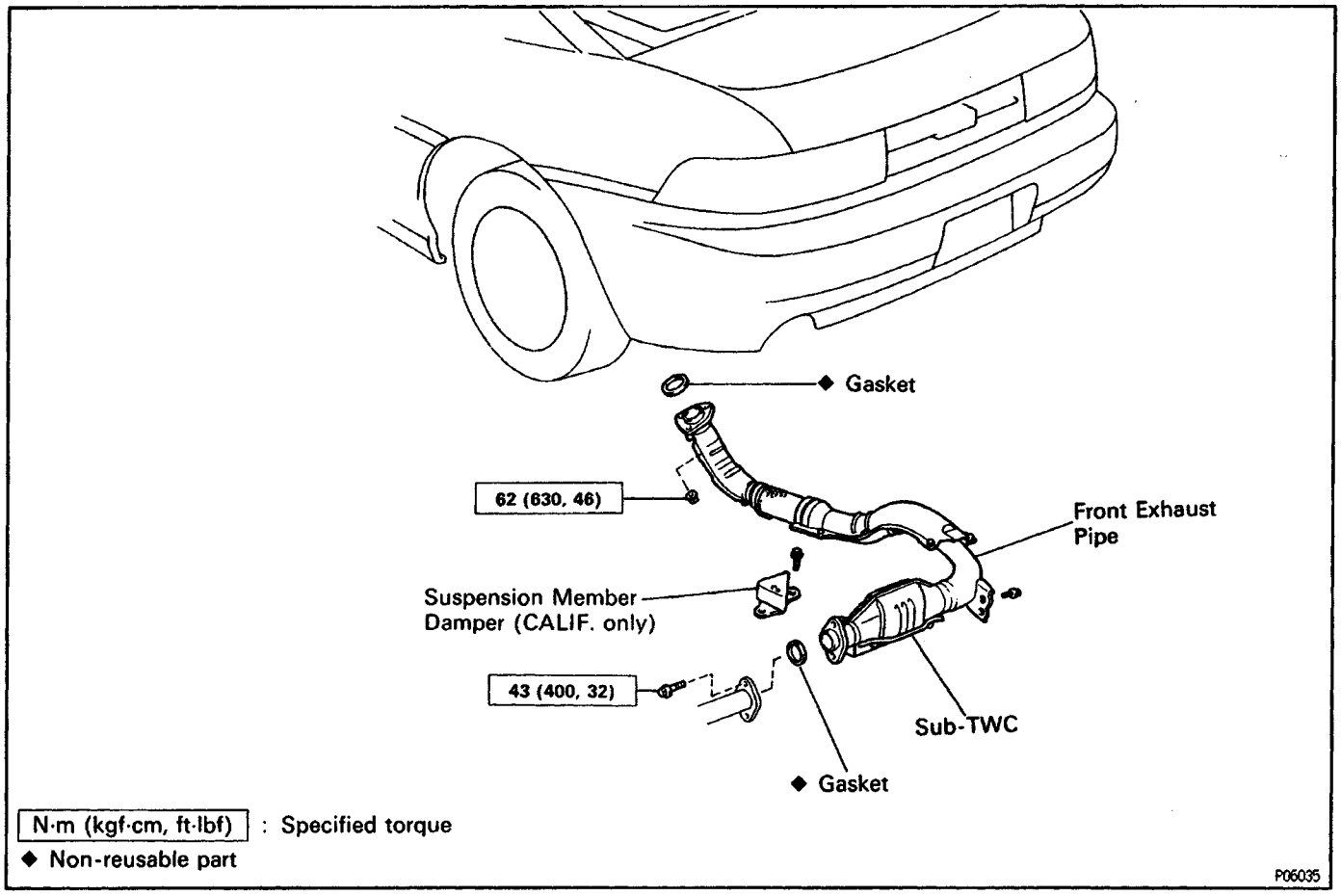

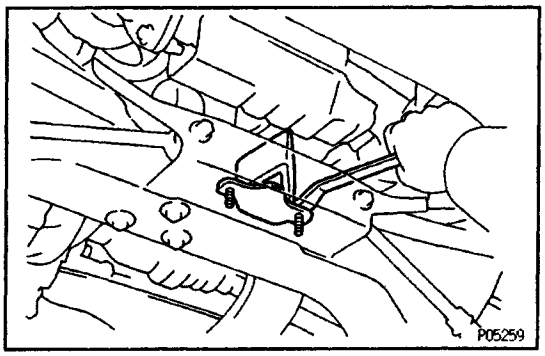

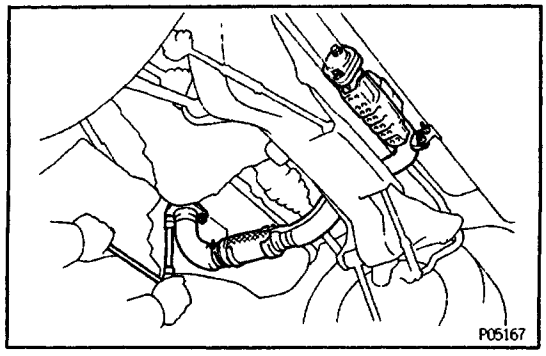

SUB–TWC REPLACEMENT (CALIF. only)

(See Components for Sub–TWC Removal and Installation (CALIF. only))

CAUTION: Check that the sub–TWC is cool.

1. REMOVE FRONT EXHAUST PIPE (SUB–TWC)

(a) (CALIF. only)
Remove the two bolts and damper.

(b) Remove the two bolts holding the front exhaust pipe to the tailpipe bracket.
(c) Remove the two bolts holding the front exhaust pipe to the tailpipe.
(d) Using a 14 mm deep socket wrench, remove the three nuts.
(e) Remove the front exhaust pipe and two gaskets.

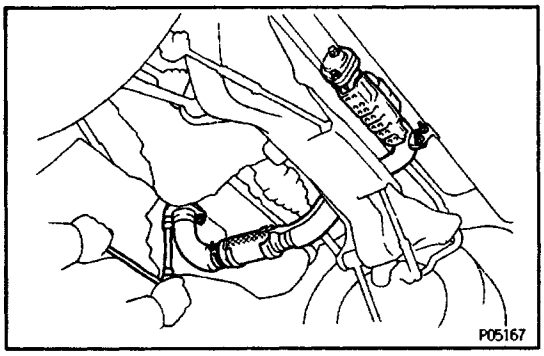

2. REINSTALL FRONT EXHAUST PIPE (SUB–TWC)

(a) Place two new gaskets to the front and rear of the front exhaust pipe.

(b) Using a 14 mm deep socket wrench, install the front exhaust pipe with three new nuts.

Torque: 62 N–m (630 kgf–cm, 46 ft–lbf)

(c) Install the two bolts holding the front exhaust pipe to the tailpipe.

Torque: 43 N–m (440 kgf–cm, 32 ft–lbf)

(d) Install the two bolts holding the front exhaust pipe bracket to the tailpipe bracket.

Torque: 19 N–m (190 kgf–cm, 14 ft–lbf)

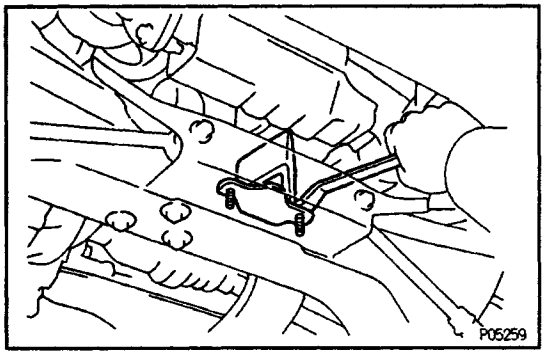

(e) (CALIF. only)

Install the damper with the two bolts.

Torque: 21 N–m (210 kgf–cm, 15 ft–lbf)

COMPRESSION CHECK

HINT: If there is lack of power, excessive oil con–sumption or poor fuel economy, measure the com–pression pressure.

1. WARM UP AND STOP ENGINE

Allow the engine to warm up to normal operating temperature.

2. DISCONNECT DISTRIBUTOR CONNECTORS

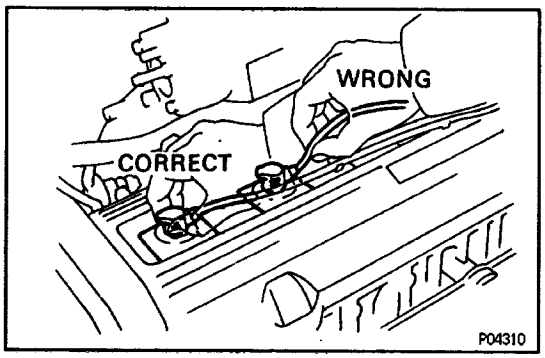

3. DISCONNECT HIGH–TENSION CORDS FROM SPARK PLUGS

Disconnect the high – tension cords at the rubber boot. Do not pull on the cords.

NOTICE: Pulling on or bending the cords may damage the conductor inside.

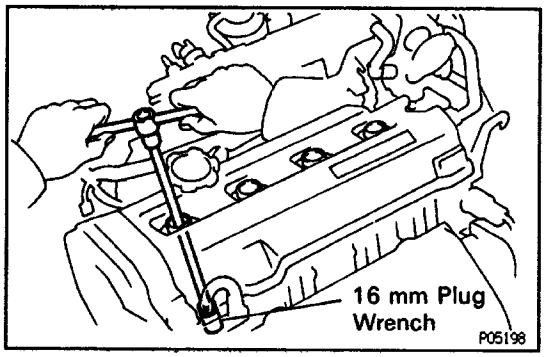

4. REMOVE SPARK PLUGS

Using a 16 mm plug wrench, remove the four spark plugs.

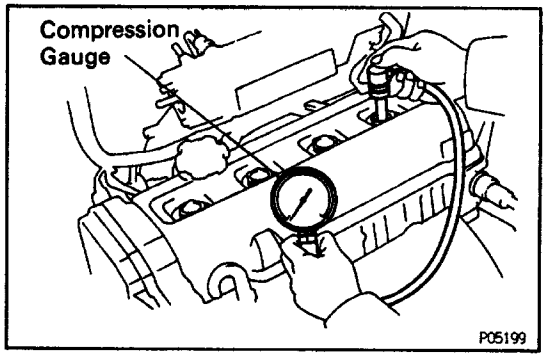

5. CHECK CYLINDER COMPRESSION PRESSURE

(a) Insert a compression gauge into the spark plug hole.
(b) Fully open the throttle.
(c) While cranking the engine, measure the compression pressure.

HINT: Always use a fully charged battery to obtain engine speed of 250 rpm or more.

(d) Repeat steps
(a) through
(c) for each cylinder.

NOTICE: This measurement must be done in as short a time as possible.

Compression pressure:
1,226 kPa (12.5 kgf/cm^2, 178 psi) or more

Minimum pressure:
981 kPa (10.0 kgf/cm^2, 142 psi)

Difference between each cylinder:
98 kPa (1.0 kgf/cm^2, 14 psi) or less

(e) If the cylinder compression in one or more cylinders is low, pour a small amount of engine oil into the cylin–der through the spark plug hole and repeat steps (a) through (c) for cylinders with low compression.

- If adding oil helps the compression, chances are that the piston rings and/or cylinder bore are worn or damage.
- If pressure stays low, a valve may be sticking or seating is improper, or there may be leakage past the gasket.

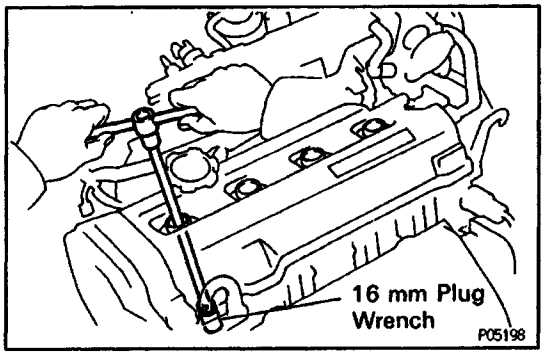

6. REINSTALL SPARK PLUGS

Using a 16 mm plug wrench, install the four spark plugs.

Torque: 18 N–m (180 kgf–cm, 13 ft–lbf)

7. RECONNECT HIGH–TENSION CORDS TO SPARK PLUGS

8. RECONNECT DISTRIBUTOR CONNECTORS

CYLINDER BLOCK

COMPONENTS FOR ENGINE REMOVAL AND INSTALLATION

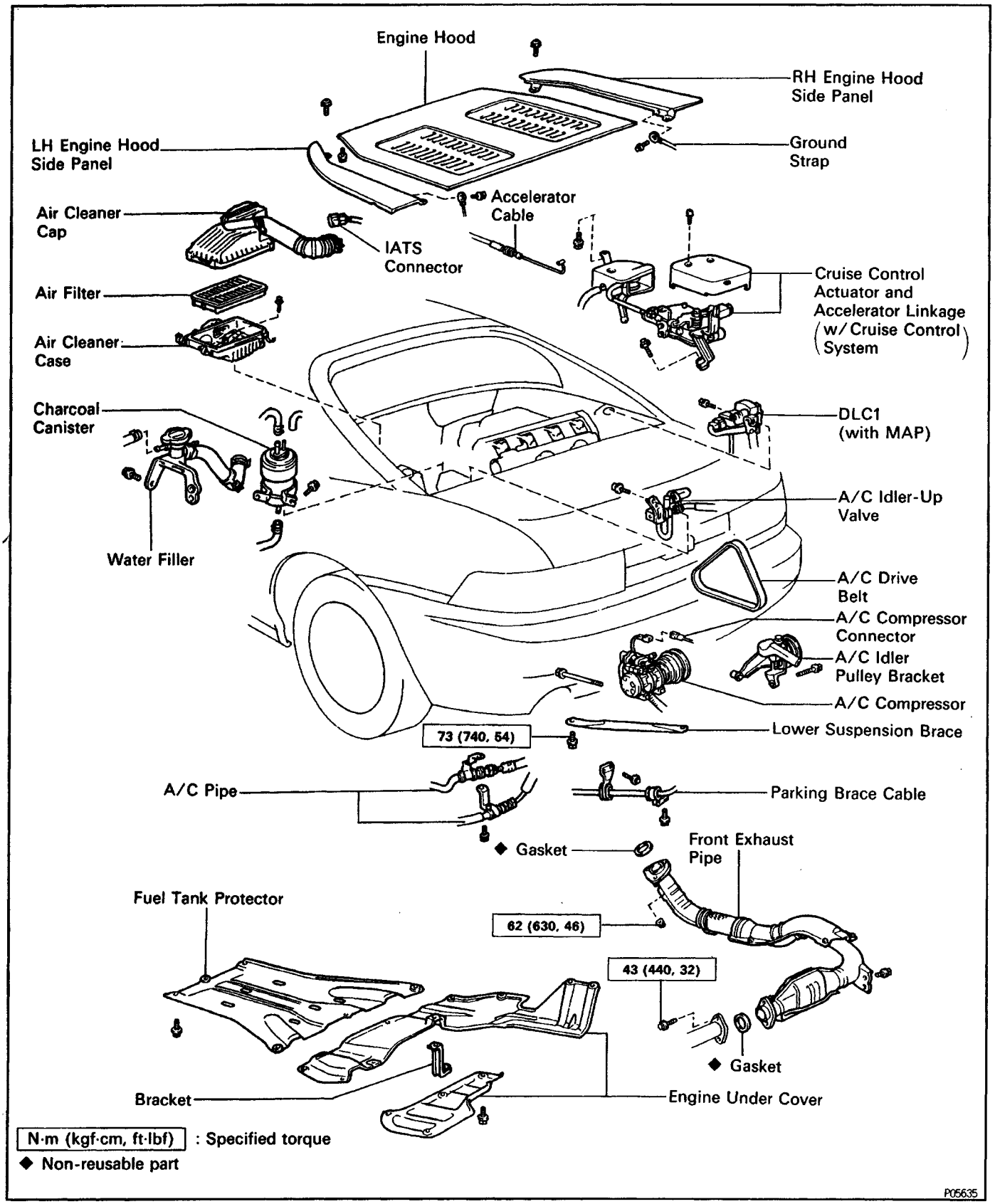

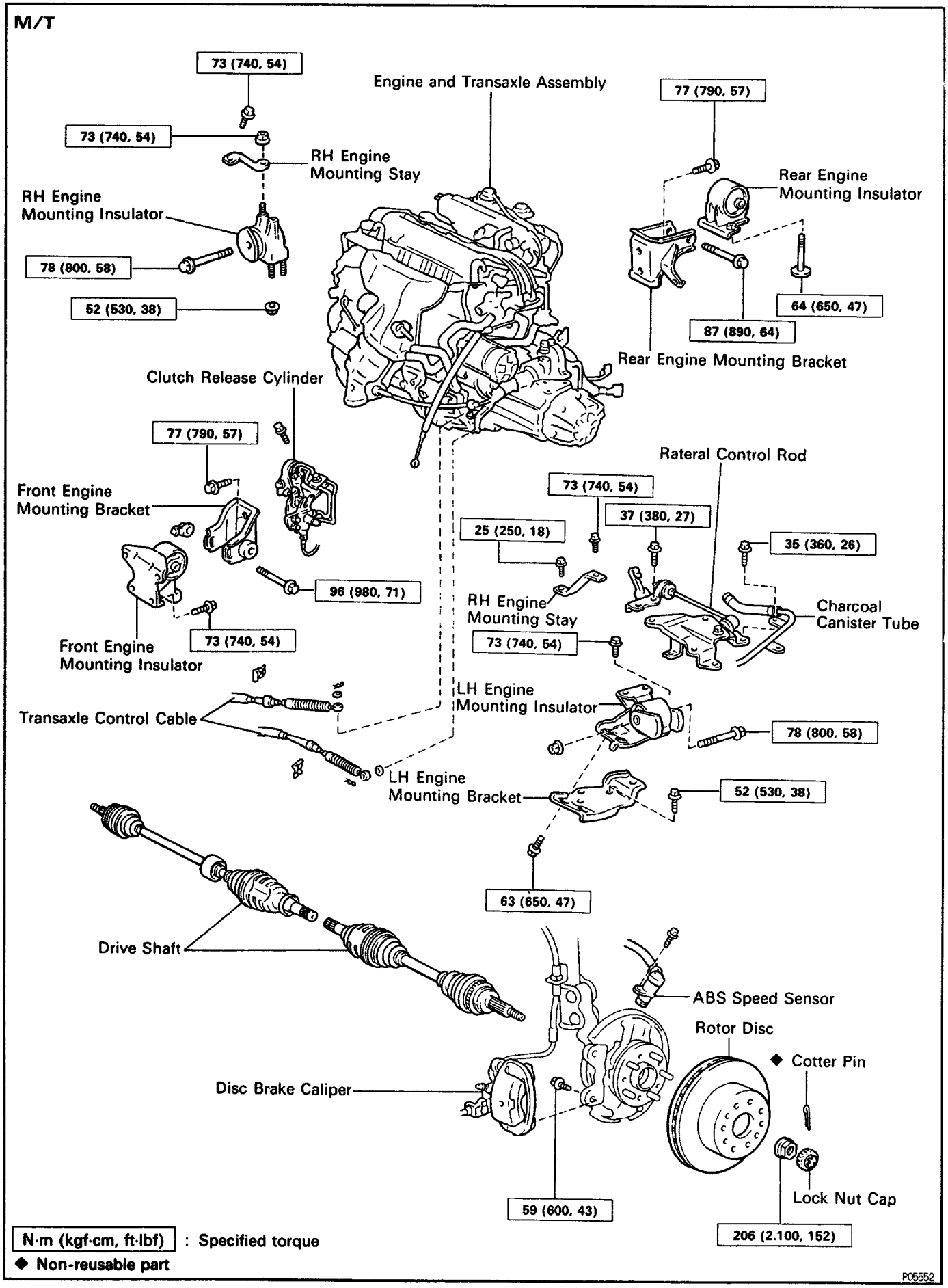
M/T
73 (740, 54)
73 (740, 54)
RH Engine Mounting Stay
RH Engine Mounting Insulator
78 (800, 58)
52 (530, 38)
Engine and Transaxle Assembly
77 (790, 57)
Rear Engine Mounting Insulator
64 (650, 47)
87 (890, 64)
Rear Engine Mounting Bracket
Clutch Release Cylinder
77 (790, 57)
Front Engine Mounting Bracket
96 (980, 71)
Front Engine Mounting Insulator
73 (740, 54)
Rateral Control Rod
73 (740, 54)
37 (380, 27)
25 (250, 18)
35 (360, 26)
RH Engine Mounting Stay
73 (740, 54)
Charcoal Canister Tube
Transaxle Control Cable
LH Engine Mounting Insulator
78 (800, 58)
LH Engine Mounting Bracket
52 (530, 38)
63 (650, 47)
Drive Shaft
ABS Speed Sensor
Rotor Disc
◆ Cotter Pin
Disc Brake Caliper
59 (600, 43)
Lock Nut Cap
206 (2.100, 152)
N·m (kgf·cm, ft·lbf) : Specified torque
◆ Non-reusable part
P05552

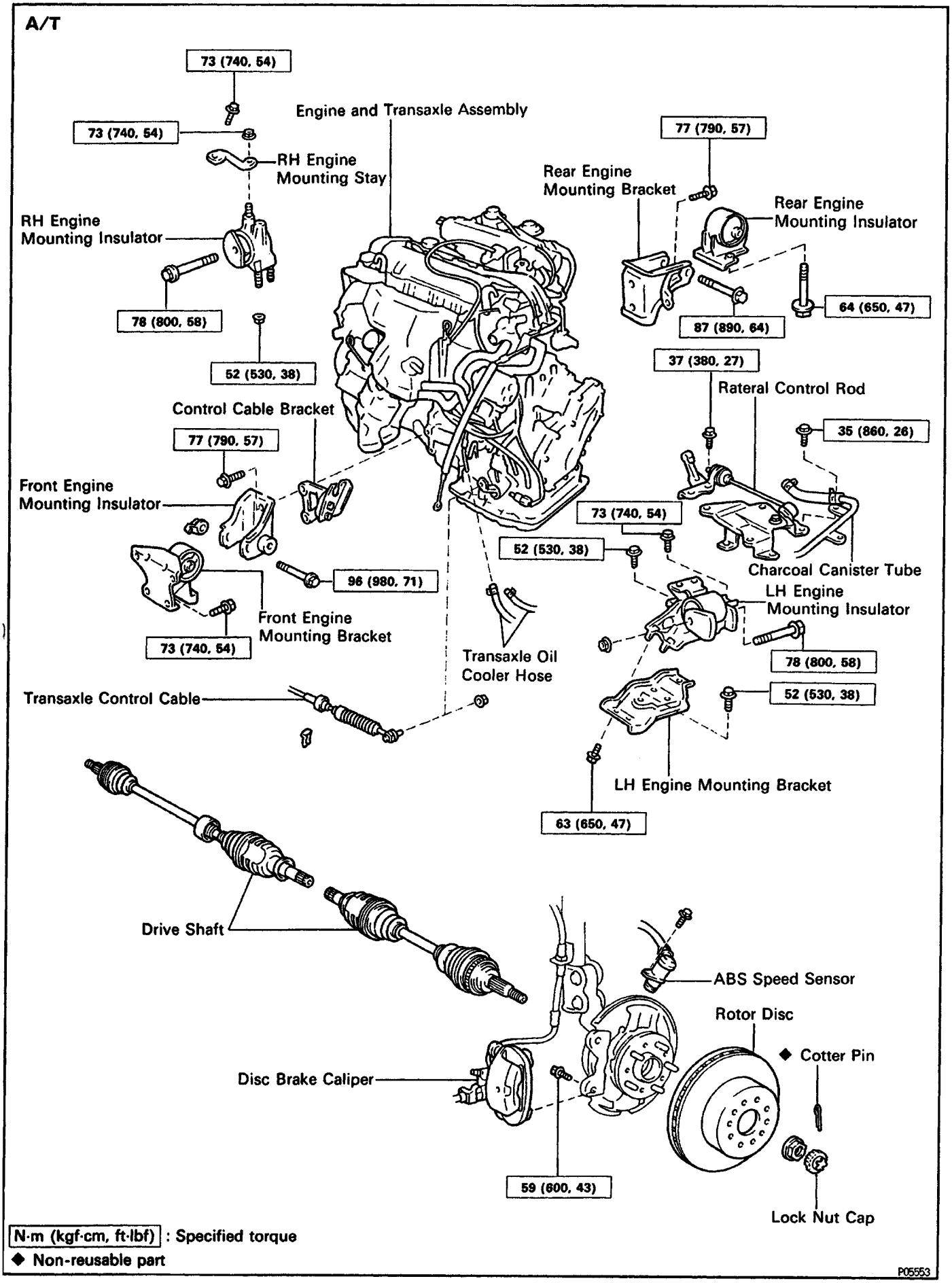
A/T
73 (740, 54)
73 (740, 54)
Engine and Transaxle Assembly
RH Engine Mounting Stay
RH Engine Mounting Insulator
78 (800, 58)
52 (530, 38)
77 (790, 57)
Rear Engine Mounting Bracket
Rear Engine Mounting Insulator
64 (650, 47)
87 (890, 64)
37 (380, 27)
Rateral Control Rod
35 (860, 26)
Control Cable Bracket
77 (790, 57)
Front Engine Mounting Insulator
96 (980, 71)
Front Engine Mounting Bracket
73 (740, 54)
73 (740, 54)
52 (530, 38)
Charcoal Canister Tube
LH Engine Mounting Insulator
78 (800, 58)
Transaxle Oil Cooler Hose
Transaxle Control Cable
52 (530, 38)
LH Engine Mounting Bracket
63 (650, 47)
Drive Shaft
ABS Speed Sensor
Rotor Disc
◆ Cotter Pin
Disc Brake Caliper
59 (600, 43)
Lock Nut Cap
N·m (kgf·cm, ft·lbf) : Specified torque
◆ Non-reusable part
P05553

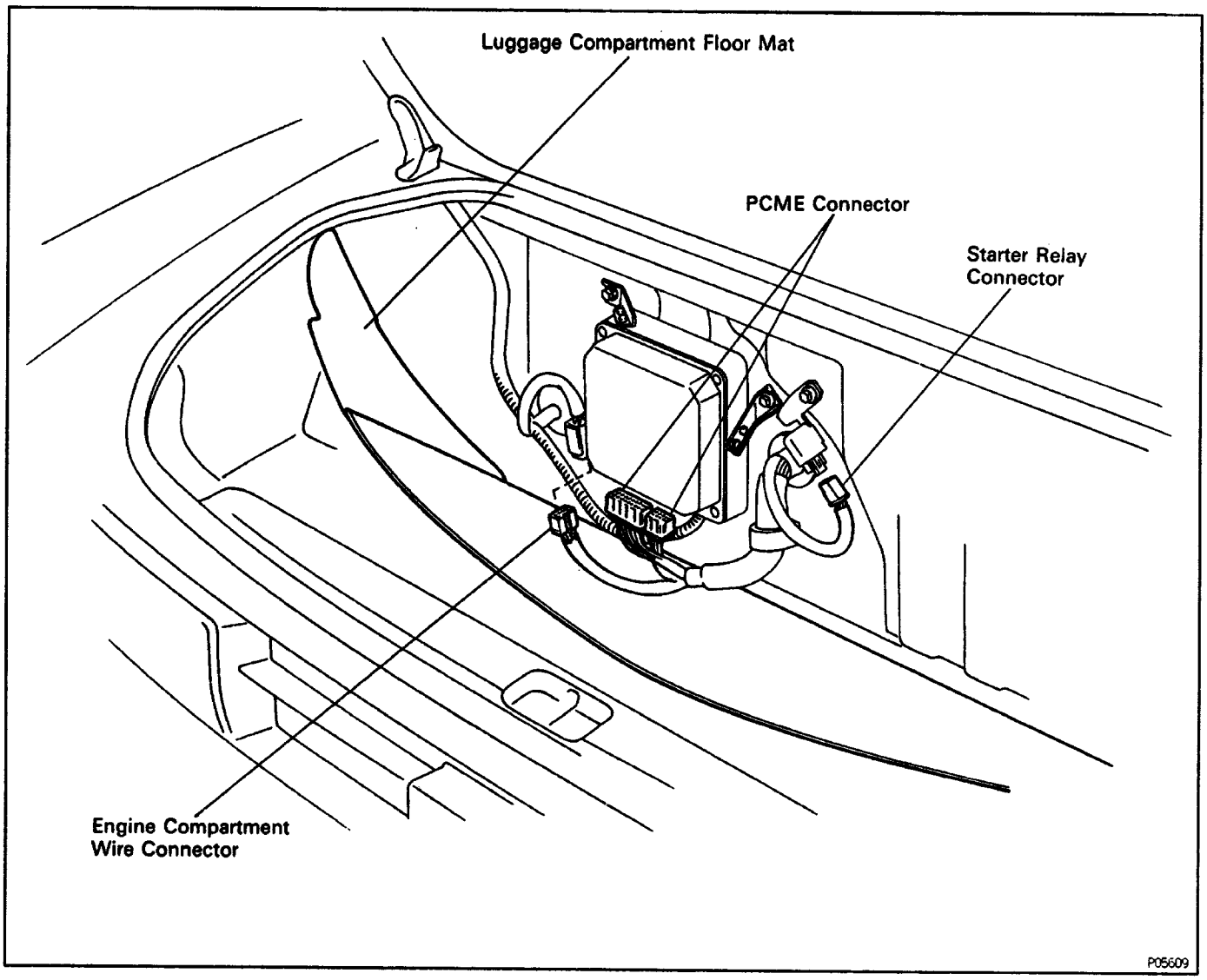

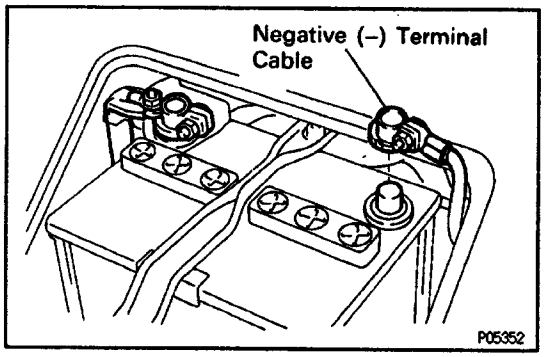

EG11G–01

ENGINE REMOVAL

(See Components for Engine Removal and Installation)

1. DISCONNECT CABLE FROM NEGATIVE TERMINAL OF BATTERY

CAUTION: Turn the ignition switch to 'LOCK' Disconnect the negative terminal from the battery. Wait at least 20 seconds before proceeding with work.

2. REMOVE ENGINE HOOD
3. REMOVE ENGINE HOOD SIDE PANELS
4. REMOVE ENGINE UNDER COVERS
5. DRAIN ENGINE COOLANT
6. DRAIN ENGINE OIL
7. DRAIN TRANSAXLE OIL

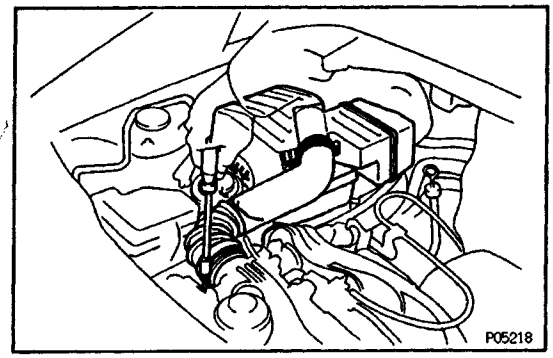

8. REMOVE AIR CLEANER HOUSING

(a) Disconnect the IATS connector.
(b) Disconnect the air cleaner hose from the throttle body.
(c) Disconnect the four clamps, and remove the air cleaner cap.
(d) Remove the air filter.
(e) Remove the three bolts and air cleaner case.

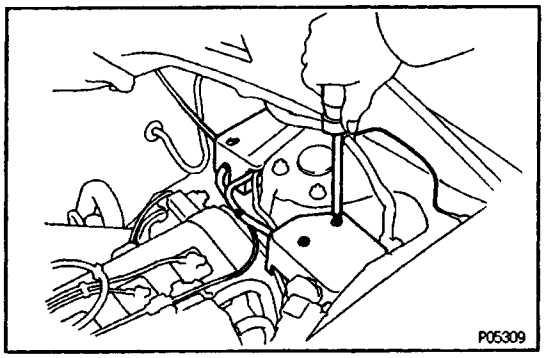

9. DISCONNECT ACCELERATOR LINKAGE FROM THROTTLE BODY

10. (w/ CRUISE CONTROL SYSTEM) REMOVE CRUISE CONTROL ACTUATOR AND ACCELERATOR LINKAGE

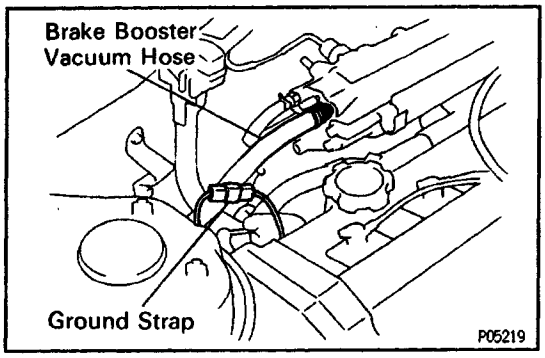

11. DISCONNECT GROUND STRAP CONNECTOR

12. DISCONNECT BRAKE BOOSTER VACUUM HOSE

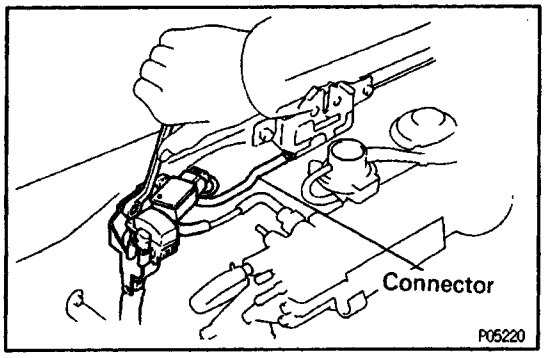

13. DISCONNECT DATA LINK CONNECTOR 1 AND MAP

(a) Disconnect the engine hood curtesy switch connector.
(b) Remove the bolt, and disconnect the data link connector and MAP from the body.

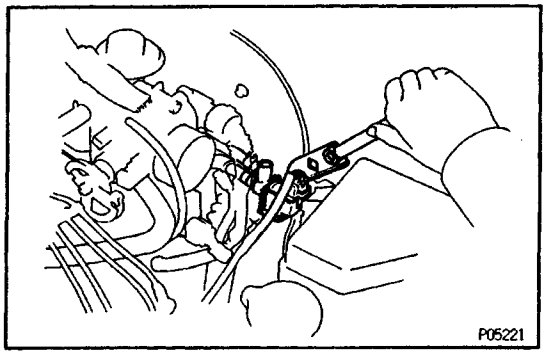

14. DISCONNECT A/C IDLE–UP VALVE FROM BODY

Remove the bolt, and disconnect the A/C idle–up from the body.

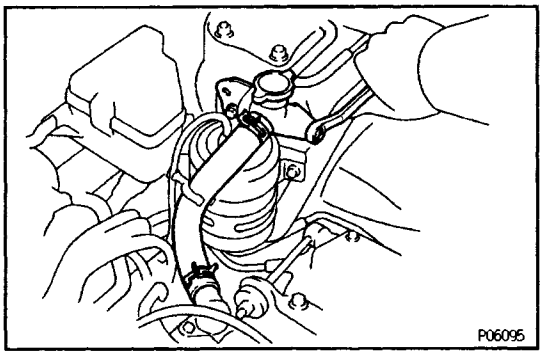

15. REMOVE WATER FILLER

(a) Disconnect the following hose:
(1) Water filler hose
(2) Coolant reservoir hose
(b) Remove the two bolts and water filler.

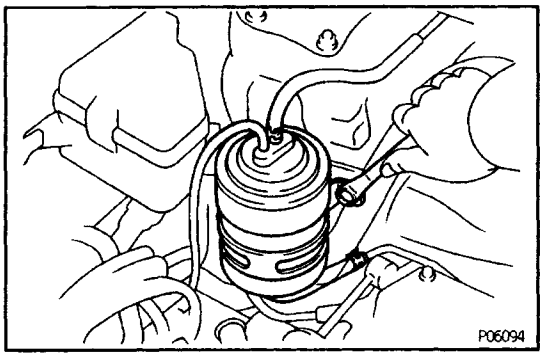

16. REMOVE CHARCOAL CANISTER

(a) Disconnect the three hoses from the charcoal canis–ter.
(b) Remove the two bolts and charcoal canister.

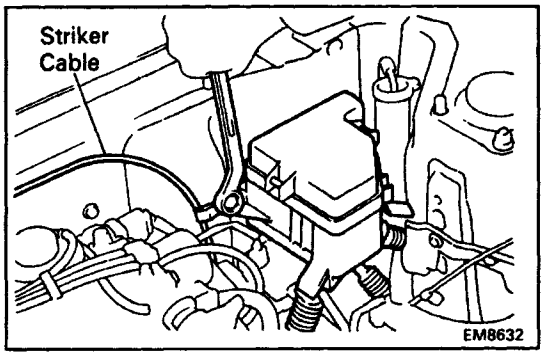

17. REMOVE ENGINE RELAY BOX, AND DISCONNECT ENGINE WIRE

(a) Remove the two bolts and relay box. Disconnect the luggage compartment striker cable.

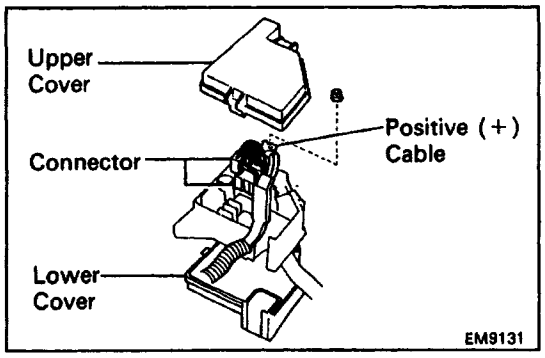

(b) Remove the upper and lower covers from the relay box.
(c) Disconnect the positive (+) cable and two connectors of the engine wire from the relay box.

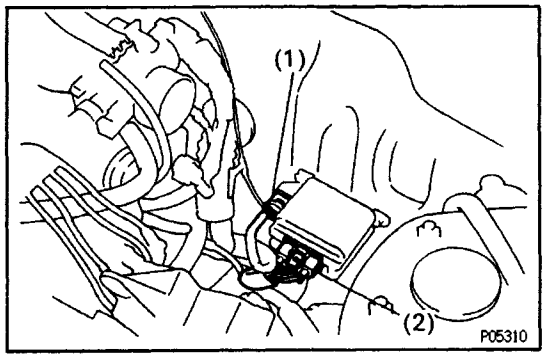

18. DISCONNECT CONNECTORS

Disconnect the following connector and cord:
(1) Noise filter connector
(2) Igniter connector

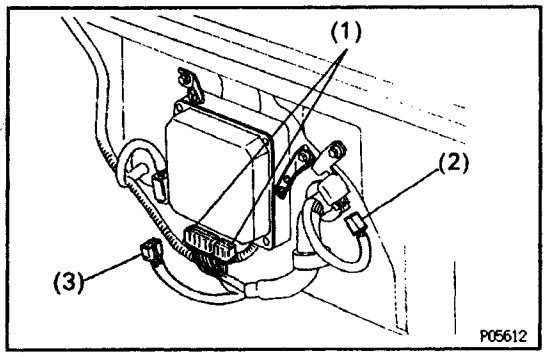

19. DISCONNECT ENGINE WIRE FROM LUGGAGE COMPARTMENT

(a) Disconnect the following connectors:
(1) Two PCME (& T) connectors
(2) Starter relay connector
(3) Engine compartment wire connector

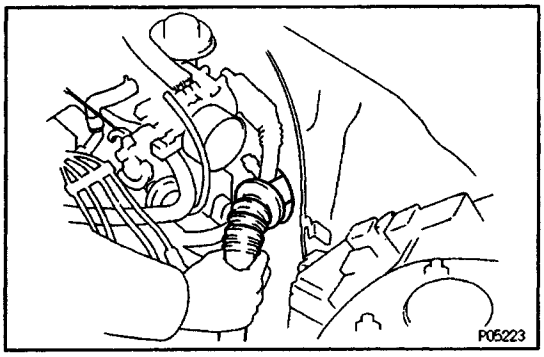

(b) Pull out the engine wire from the luggage compartment.

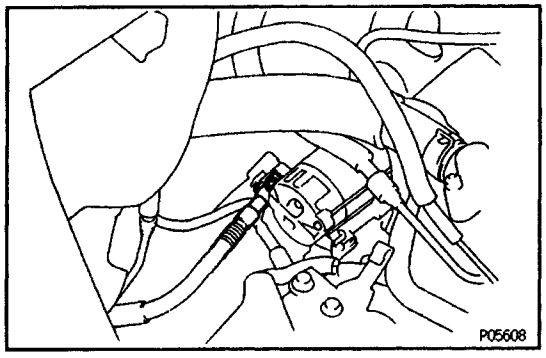

20. DISCONNECT STARTER CABLE

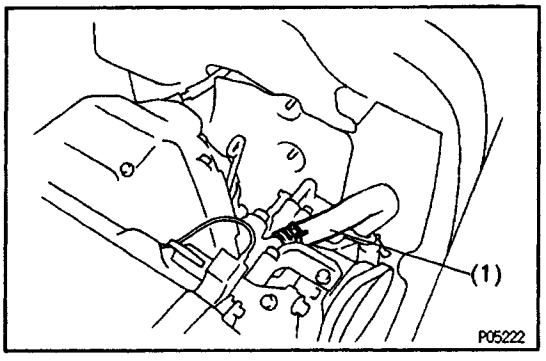

21. DISCONNECT HOSES

(a) Disconnect the following connectors:
(1) Radiator hose from water inlet

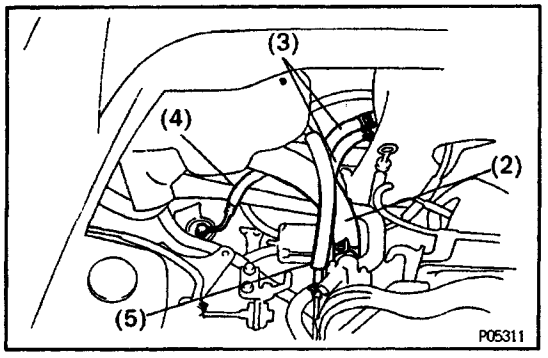

(2) Radiator hose from water outlet
(3) Two heater water hoses
(4) Fuel inlet hose from fuel filter
(5) Fuel return hose

CAUTION: Catch leaking fuel in a container.

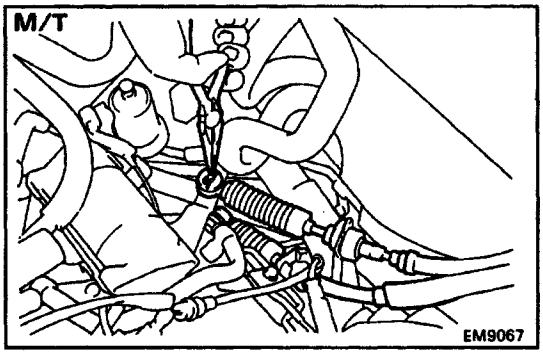

22. DISCONNECT TRANSAXLE CONTROL CABLE (S) FROM TRANSAXLE

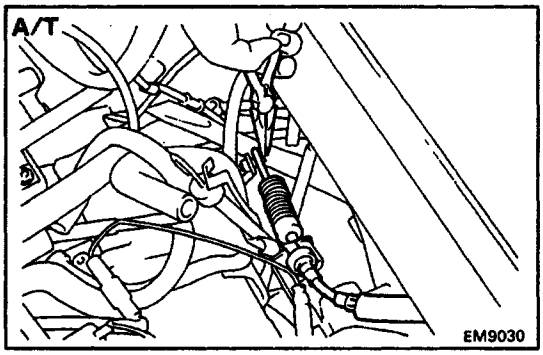

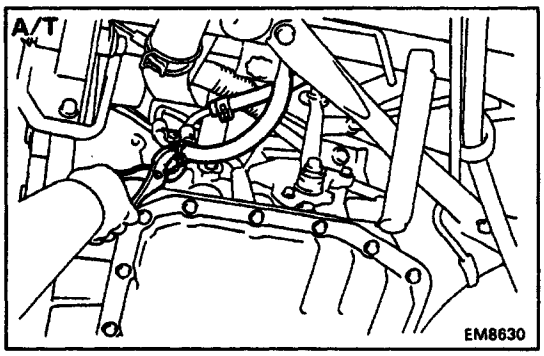

23. (A/T)
DISCONNECT TRANSAXLE OIL COOLER HOSES

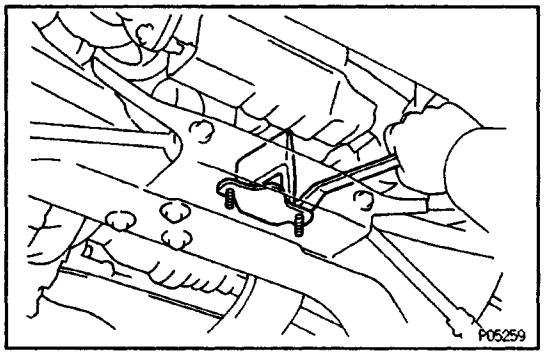

24. REMOVE EXHAUST PIPE

(a) (CALIF. only)
Remove the two bolts and damper.

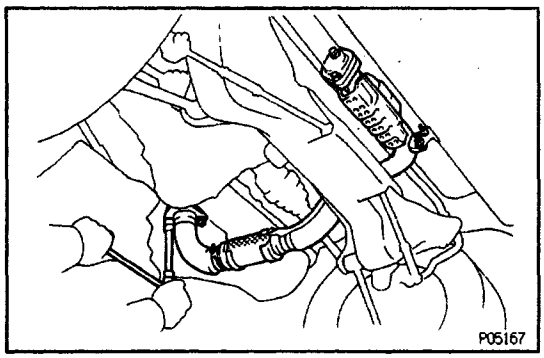

(b) Remove the two bolts holding the front exhaust pipe bracket to the tailpipe bracket.
(c) Remove the two bolts holding the front exhaust pipe to the tailpipe.
(d) Using a 14 mm deep socket wrench, remove the three nuts holding the front exhaust pipe to the TWC.
(e) Remove the front exhaust pipe.
(f) Remove the two gaskets.

25. DISCONNECT A/C COMPRESSOR PROM ENGINE

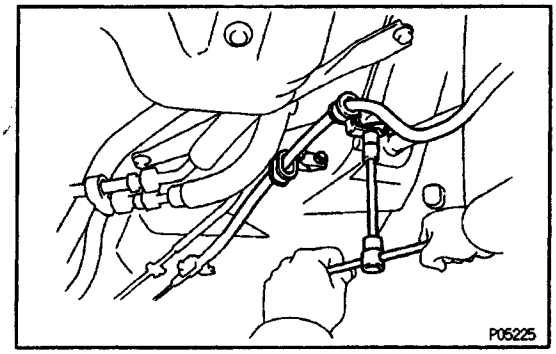

(a) Remove the three clamp bolts, and disconnect the parking brake cable.

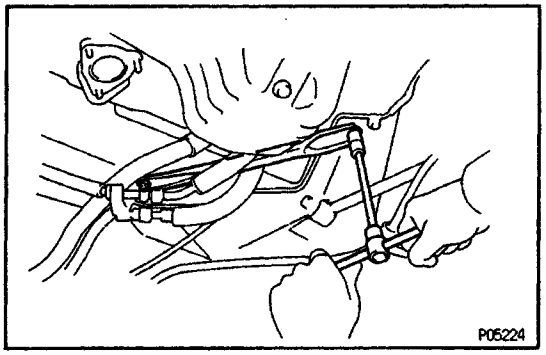

(b) Remove the two bolts and lower suspension brace.

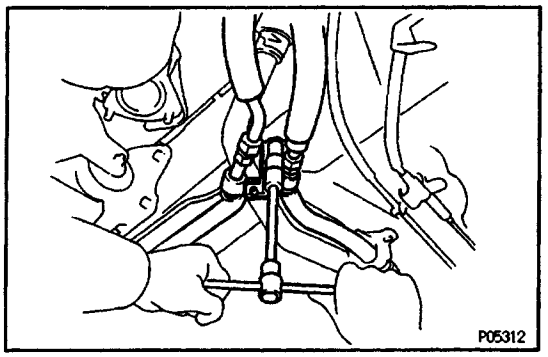

(c) Remove the clamp nut, and disconnect the two A/C pipes.

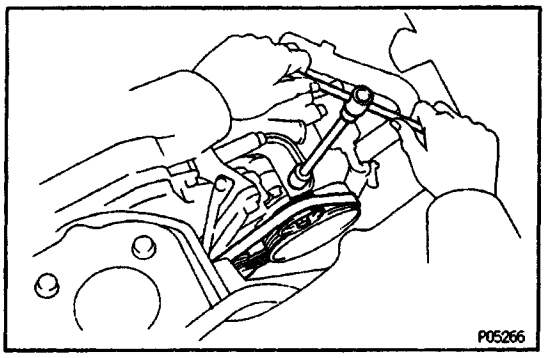

(d) Loosen the idler pulley nut.
(e) Loosen the adjusting bolt, and remove the drive belt.

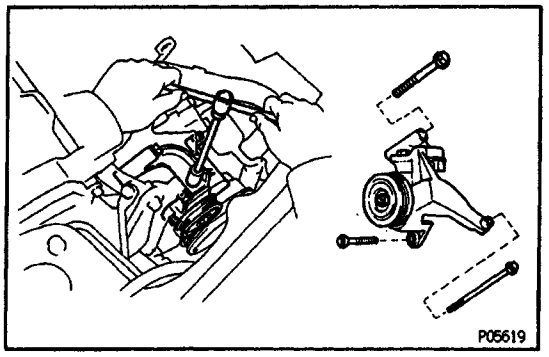

(f) Disconnect the A/C compressor connector.
(g) Remove the three bolts and idler pulley bracket.

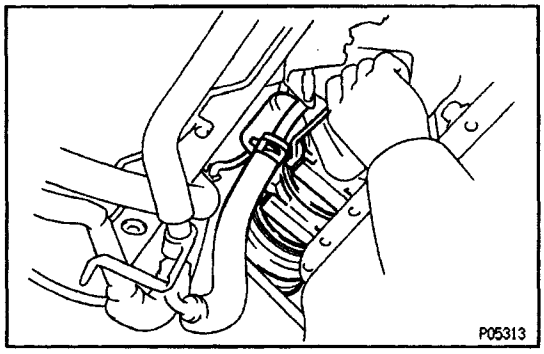

(h) Remove the two bolts, and disconnect the A/C compressor from the engine.

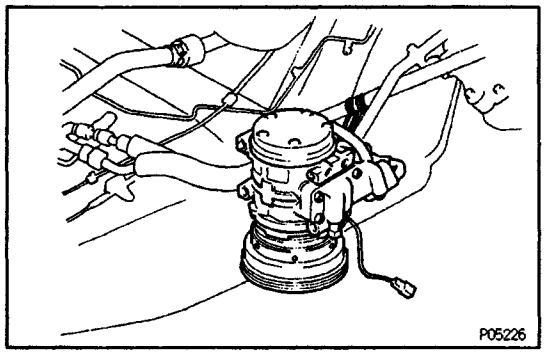

HINT: Suspend the A/C compressor to strut rod with a string.

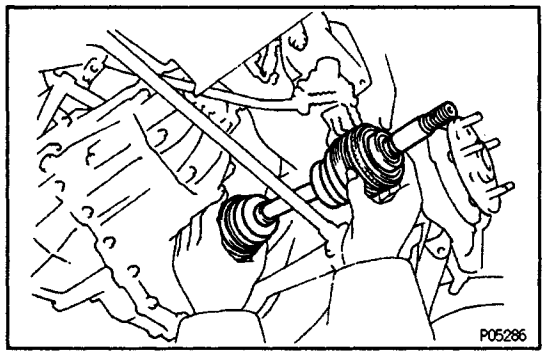

26. REMOVE DRIVE SHAFTS
(See Drive Shaft Removal in SA section)

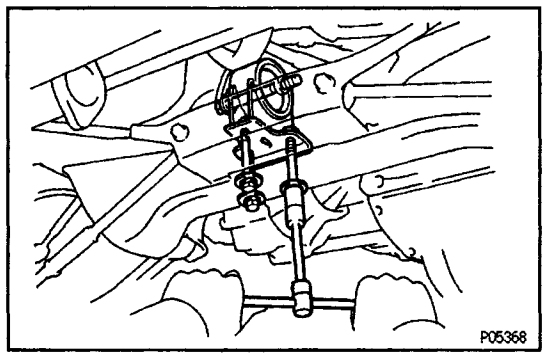

27. REMOVE REAR ENGINE MOUNTING INSULATOR
(a) Remove the through bolt holding the mounting insulator to the mounting bracket.
(b) Remove the three bolts and mounting insulator.

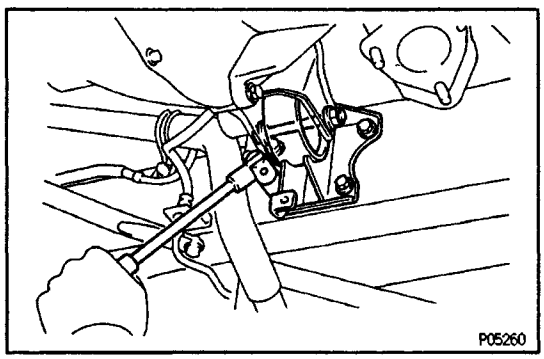

28. REMOVE FRONT ENGINE MOUNTING INSULATOR
(a) Remove the through bolt and nut holding the mounting insulator to the mounting bracket.
(b) Remove the four bolts and mounting insulator.

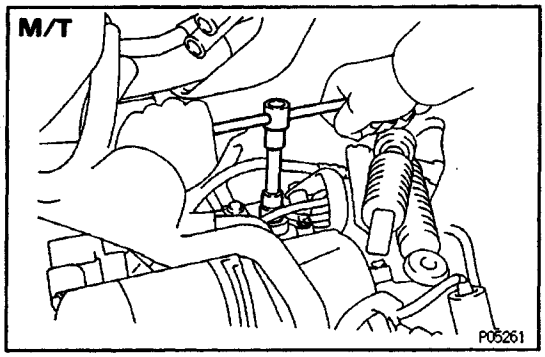

29. REMOVE FRONT ENGINE MOUNTING BRACKET

(M/T)

(a) Remove the bolt and nut holding the clutch release cylinder to the transaxle.

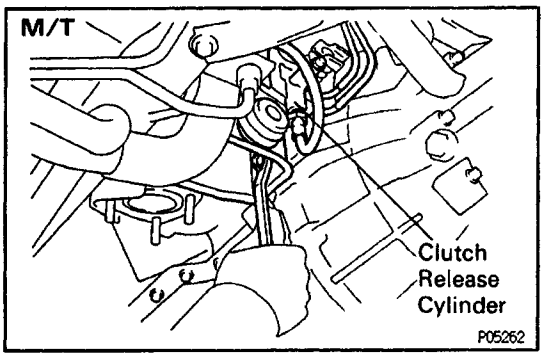

(b) Remove the two bolts and mounting bracket, and disconnect the clutch release cylinder from the tra–nsaxle.

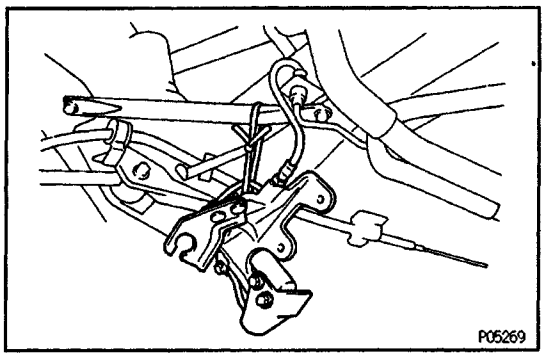

HINT: Suspend the clutch release cylinder to the suspension brace with a string.

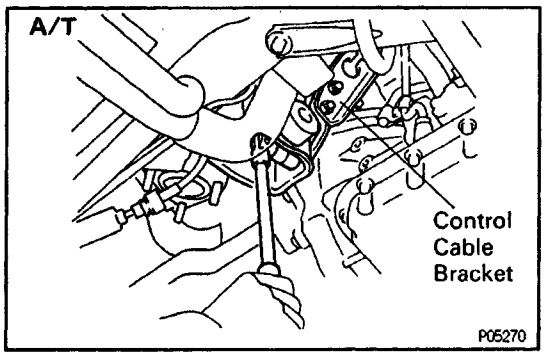

(A/T)

Remove the two bolts, mounting bracket and control cable bracket.

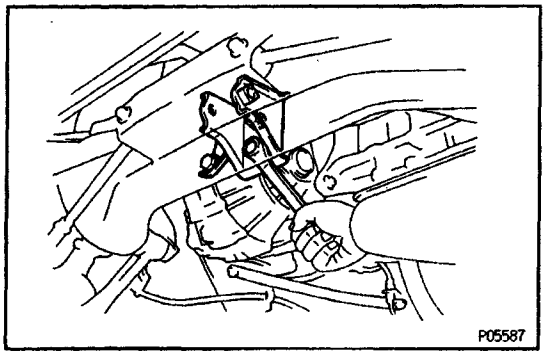

30. REMOVE REAR ENGINE MOUNTING BRACKET

Remove the three bolts and mounting bracket.

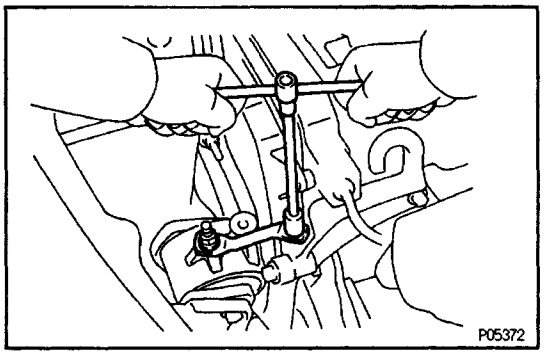

31. REMOVE RH ENGINE MOUNTING STAY

Remove the bolt, nut and mounting stay.

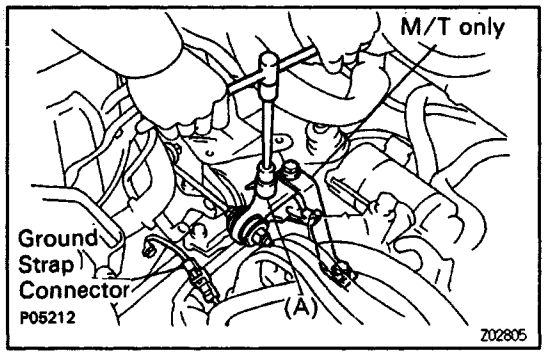

32. (M/T only)

REMOVE LH ENGINE MOUNTING STAY

Remove the two bolts and mounting stay.

33. DISCONNECT LATERAL CONTROL ROD FROM LH ENGINE MOUNTING INSULATOR

(M/T)

Remove the bolt (A), and disconnect the rateral control rod from the mounting insulator.

(A/T)

Remove the two bolts and disconnect the rateral control rod from the mounting insulator.

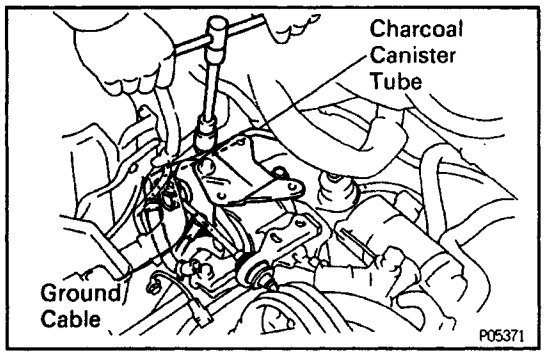

34. DISCONNECT GROUND STRAP CONNECTOR

35. REMOVE RATERAL CONTROL ROD

Remove the four bolts and rateral control rod. Disconnect the ground strap connector.

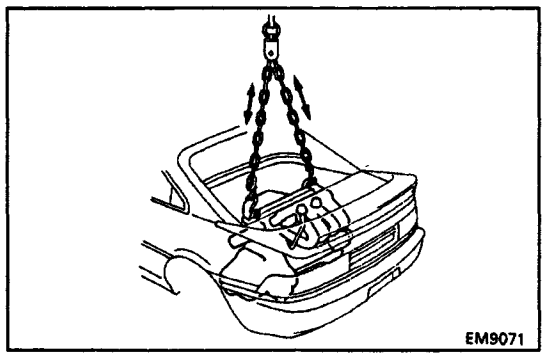

36. REMOVE ENGINE AND TRANSAXLE ASSEMBLY FROM VEHICLE

(a) Attach the engine chain hoist to the engine hangers.

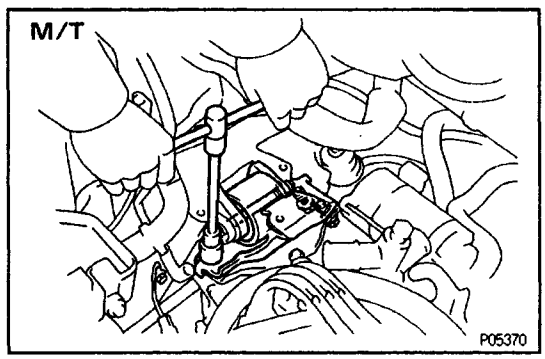

(b) (M /T)

Remove the three bolts, through bolt, nut and LH mounting insulator.

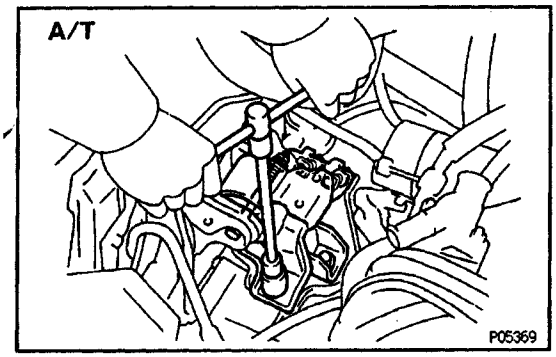

(c) (A/T)
Remove the four bolts, through bolt, nut and LH mounting insulator.

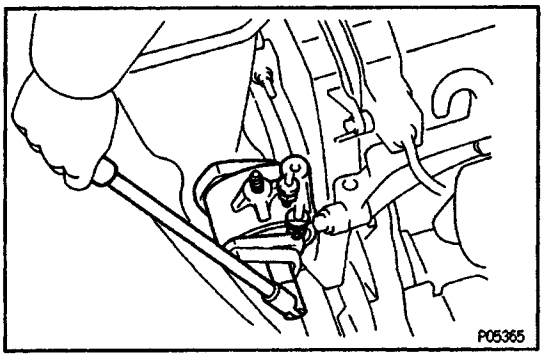

(d) Remove the through bolt, two nuts and RH mounting insulator.

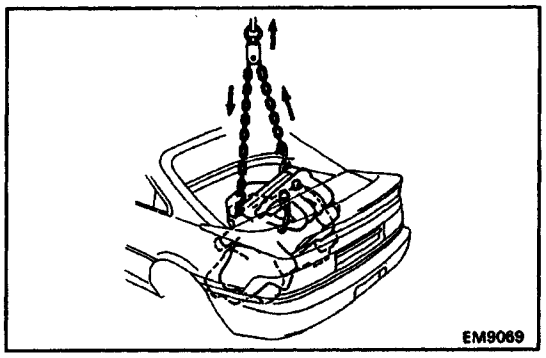

(e) Lift the engine out of the vehicle slowly and carefully.
HINT: Make sure the engine is clew of all wiring, hoses and cables.
(f) Place the engine and transaxle assembly onto the stand.

37. REMOVE LH ENGINE MOUNTING BRACKET

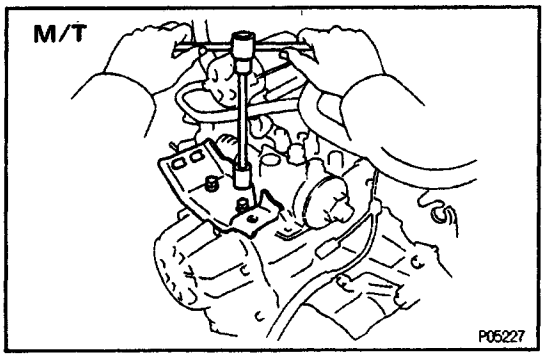

(M/T)
Remove the three bolts and mounting bracket.

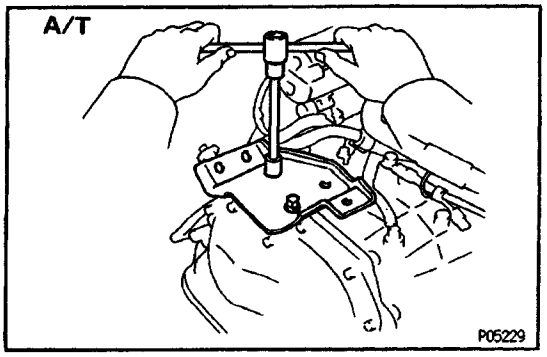

(A/T)
Remove the two bolts and mounting bracket.

EG088–05

COMPONENTS FOR ENGINE & TRANSAXLE SEPARATION AND ASSEMBLY (M/T)

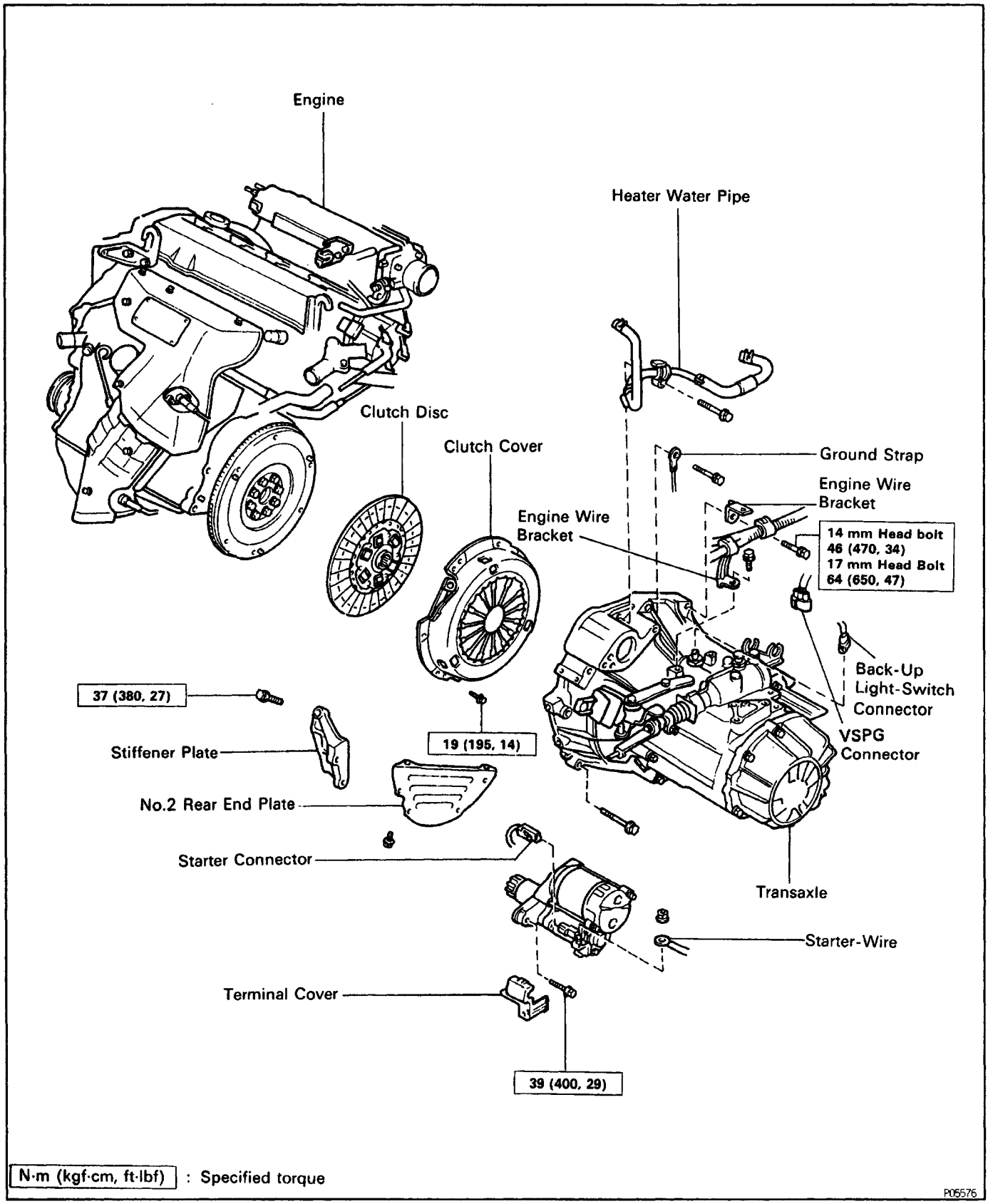

ENGINE & TRANSAXLE SEPARATION (M/T)

5G11H–01

(Components for Engine & Transaxle Separation and Assembly)

1. DISCONNECT ENGINE WIRE

(a) Remove the terminal cover from the starter.

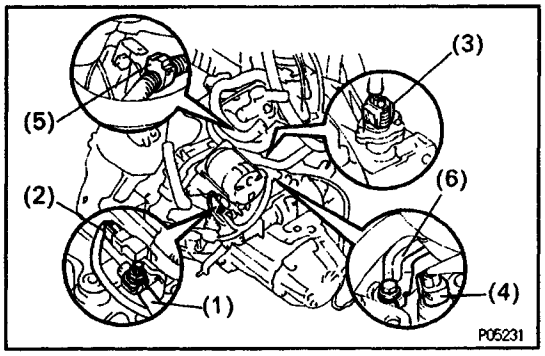

(b) Disconnect the following parts:
(1) Starter wire
(2) Starter connector
(3) Vehicle speed pulse generator connector
(4) Back–up light switch connector
(5) Engine wire clamp
(6) Engine wire bracket

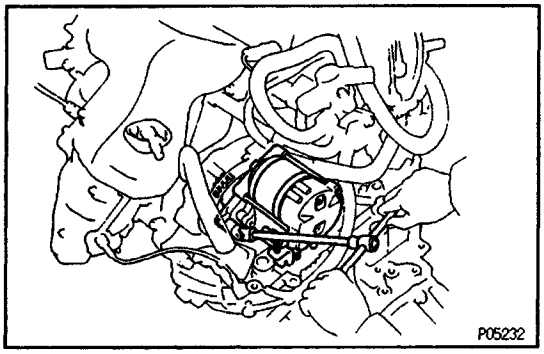

2. REMOVE STARTER

Remove the two bolts and starter.

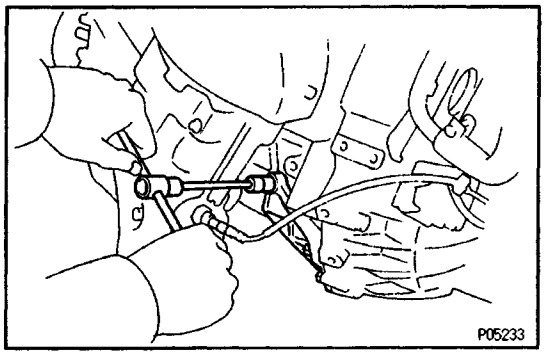

3. REMOVE STIFFENER PLATE

Remove the three bolts and stiffener plate.

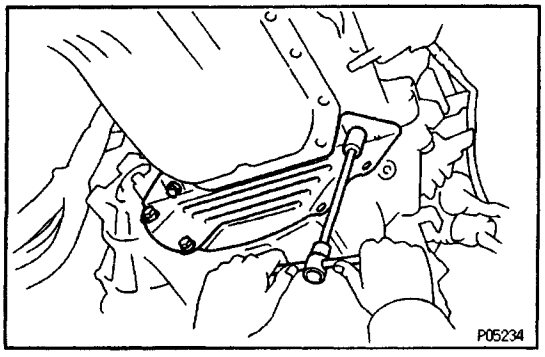

4. REMOVE NO.2 REAR END PLATE

Remove the four bolts and rear end plate.

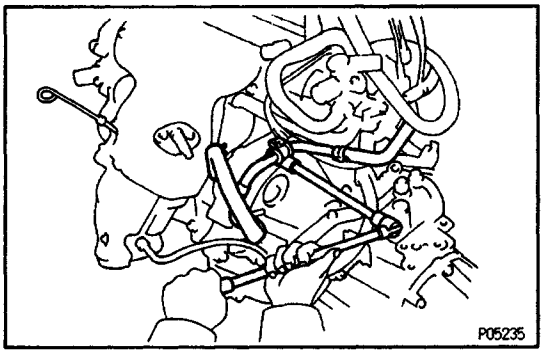

5. REMOVE HEATER WATER PIPE

(a) Disconnect the water hose from the water by–pass pipe.

(b) Remove the two bolts and heater water pipe.

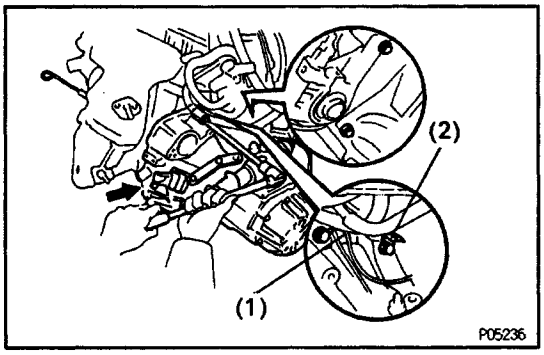

6. REMOVE TRANSAXLE

(a) Remove the five bolts and following parts:

(1) Ground strap

(2) Engine wire bracket

(b) Separate the transaxle and engine.

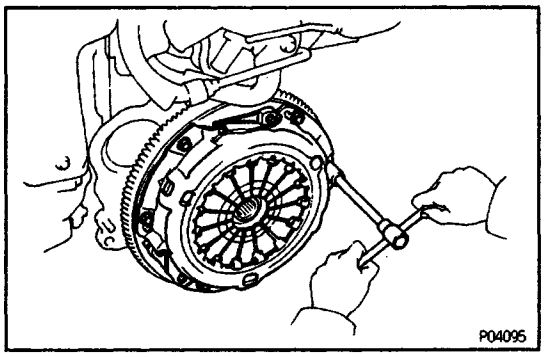

7. REMOVE CLUTCH COVER AND DISC

Remove the six bolts, clutch cover and disc.

COMPONENTS FOR ENGINE & TRANSAXLE SEPARATION AND ASSEMBLY (A/T)

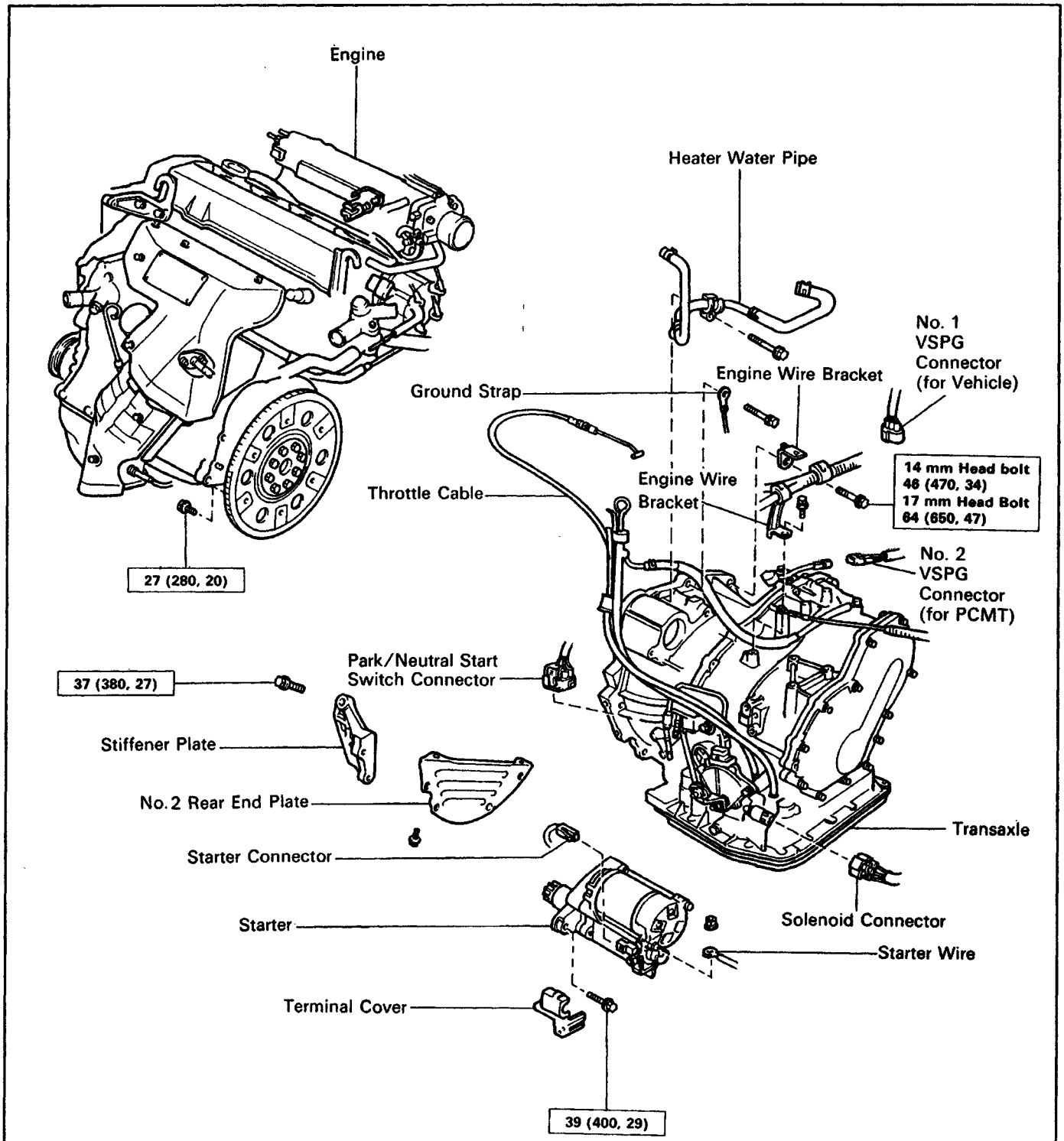

N·m (kgf·cm, ft·lbf) : Specified torque

P05577

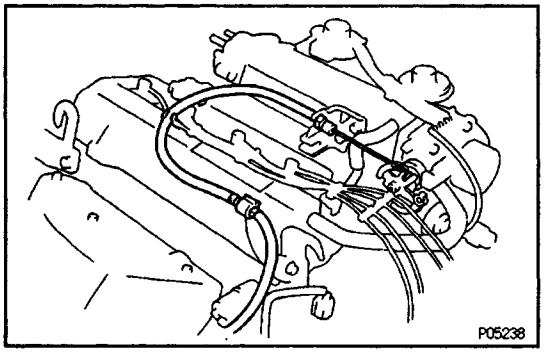

ENGINE & TRANSAXLE SEPARATION. (A/T)

EG11J–01

(Components for Engine & Transaxle Separation and Assembly (A/T))

1. DISCONNECT THROTTLE CABLE FROM THROTTLE BODY

2. DISCONNECT ENGINE WIRE

(a) Remove the terminal cover from the starter.

(b) Disconnect the following parts:

(1) Starter wire
(2) Starter connector
(3) No.1 vehicle speed pulse generator
(4) No.2 vehicle speed pulse generator
(5) Park/neutral switch connector
(6) Solenoid connector
(7) Engine wire clamp
(8) Engine wire bracket

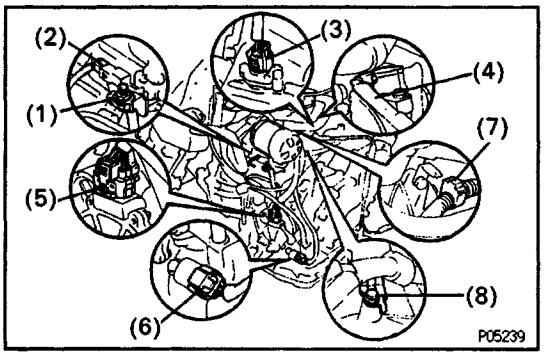

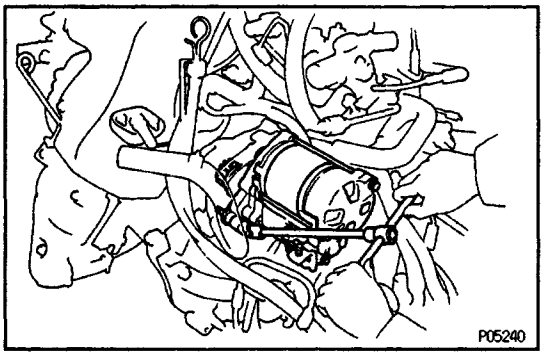

3. REMOVE STARTER

Remove the two bolts and starter.

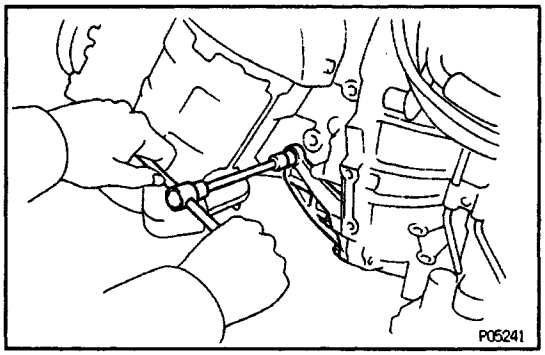

4. REMOVE STIFFENER PLATE

Remove the three bolts and stiffener plate.

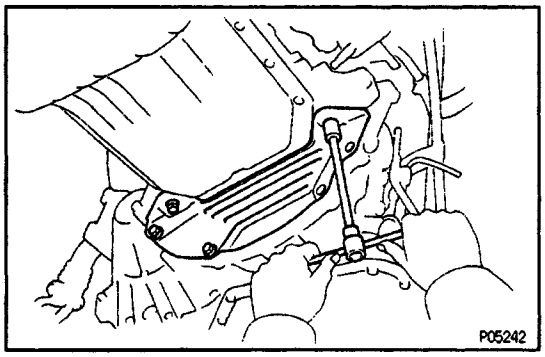

5. REMOVE NO–2 REAR END PLATE

Remove the four bolts and rear end plate.

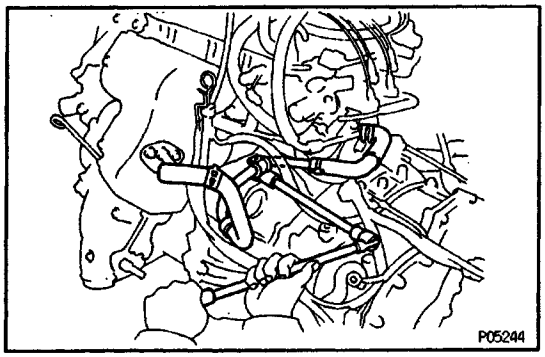

6. REMOVE HEATER WATER PIPE

(a) Disconnect the water hose from the water by–pass pipe.

(b) Remove the two bolts and heater water pipe.



7. REMOVE TRANSAXLE

A. Remove torque converter mounting bolts

(a) Turn the crankshaft the to gain access to each bolts.

(b) Hold the crankshaft pulley bolt with a wrench, and remove the six bolts.

HINT: First remove the dark green colored bolt, and remove the other bolts.

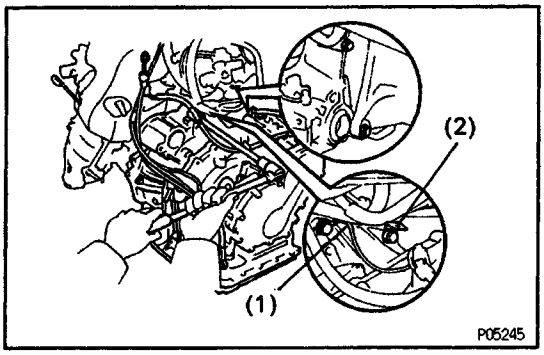

B. Remove transaxle

(a) Remove the five bolts and following parts:

(1) Ground strap

(2) Engine wire bracket

(b) Remove the transaxle together with the torque con–verter from the engine.

COMPONENTS FOR CYLINDER BLOCK–DISASSEMBLY AND ASSEMBLY

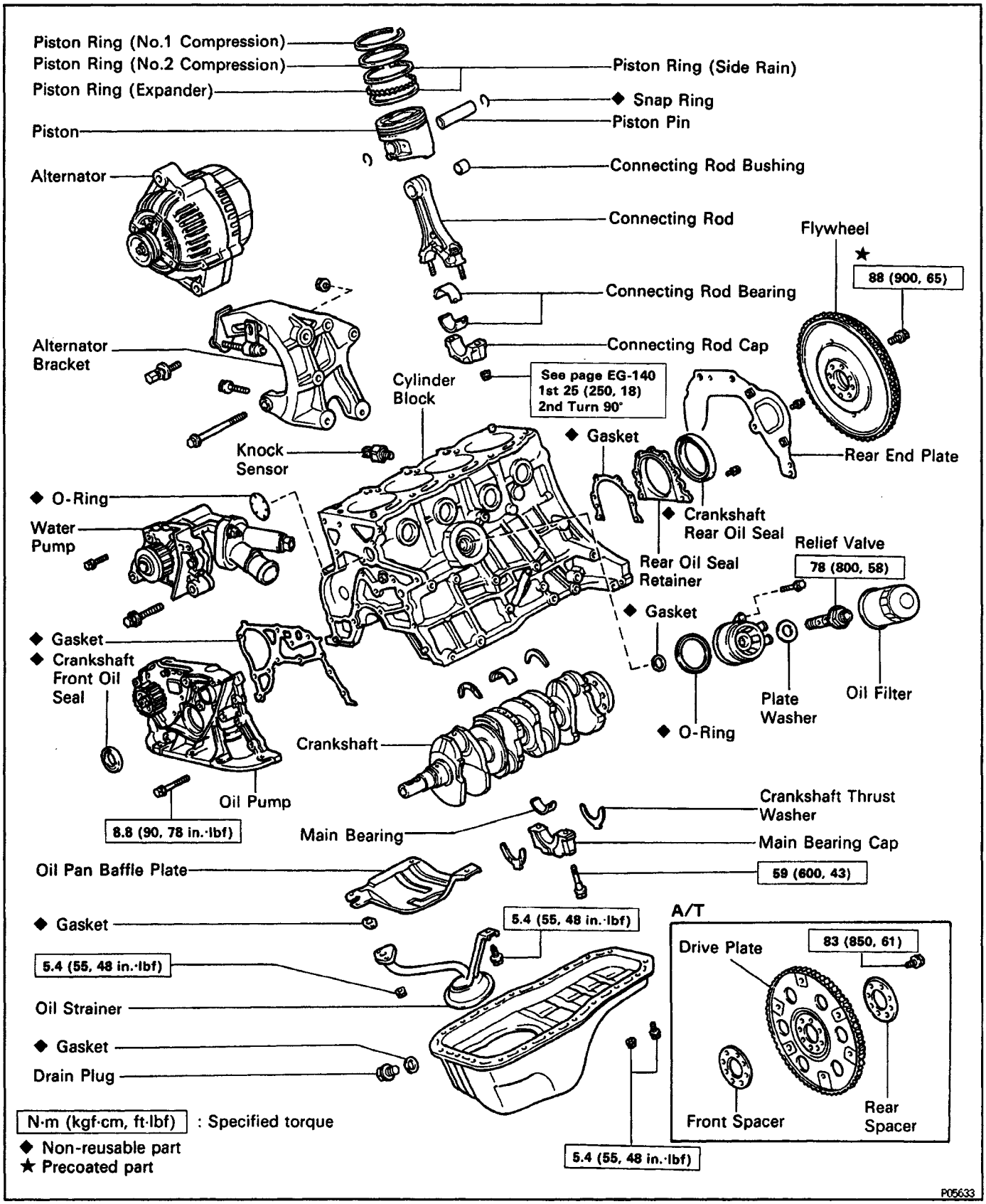

PREPARATION FOR DISASSEMBLY

EG11K–01

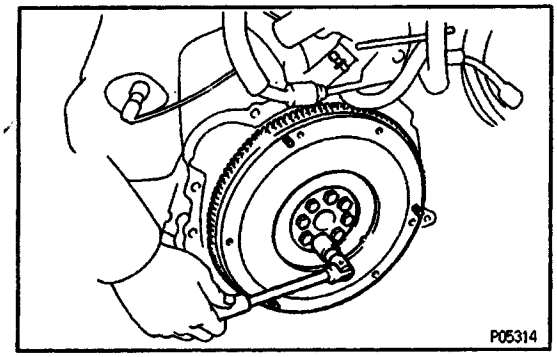

1. (M/T)

REMOVE FLYWHEEL

Remove the eight bolts and flywheel.

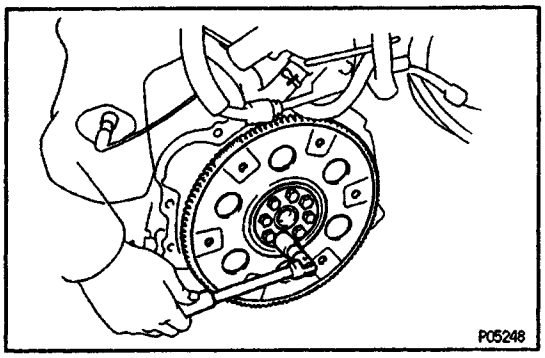

2. (A/T)

REMOVE DRIVE PLATE

Remove the eight bolts, front spacer, drive plate and rear spacer.

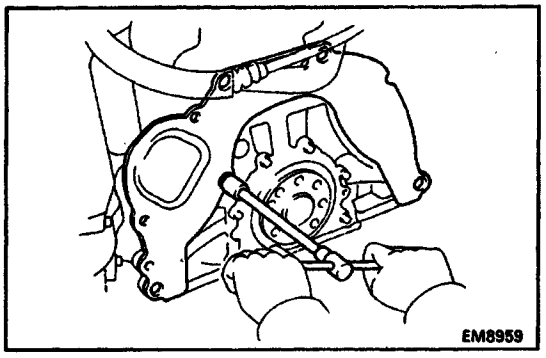

3. REMOVE REAR END PLATE

Remove the bolt and end plate.

4. INSTALL ENGINE TO ENGINE STAND FOR DISASSEMBLY

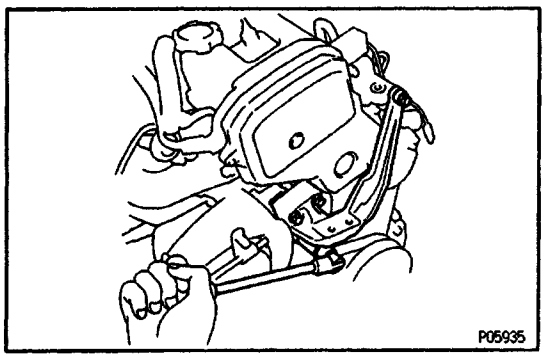

5. REMOVE RH ENGINE MOUNTING BRACKET

Remove the four bolts and mounting bracket.

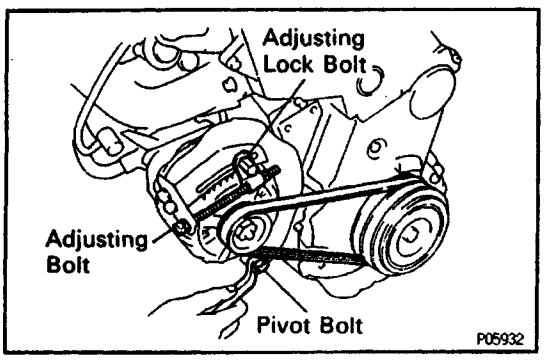

6. REMOVE ALTERNATOR

(a) Loosen the pivot bolt and adjusting lock bolt.

(b) Loosen the adjusting bolt, and disconnect the drive belt from the alternator.

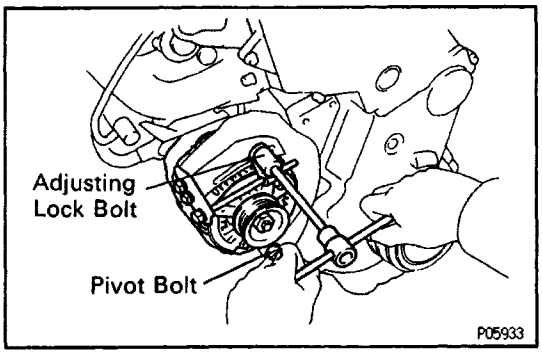

(c) Remove the pivot bolt and adjusting lock bolt, and disconnect the alternator from the bracket.

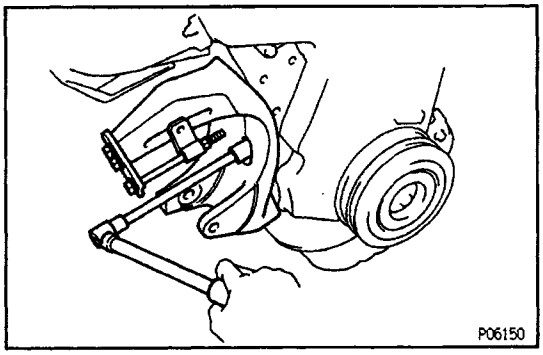

7. REMOVE ALTERNATOR BRACKET

Remove the three bolts, two nuts and alternator bracket.

8. REMOVE TIMING BELT AND PULLEYS
(See Timing Belt Removal)

9. REMOVE CYLINDER HEAD
(See Cylinder Head Removal)

10. REMOVE OIL PAN AND OIL PUMP
(See Oil pump Removal)

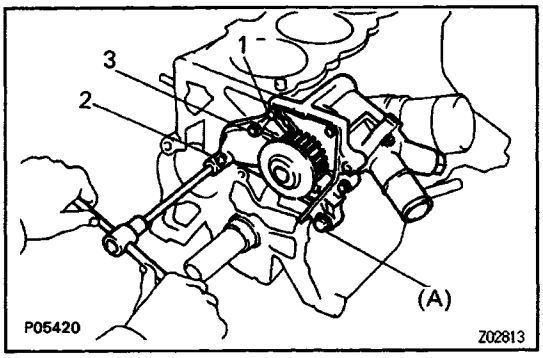

11. REMOVE WATER PUMP

(a) (w/o A/C)
Remove the bolt (A).

(b) Remove the three bolts in the sequence shown.

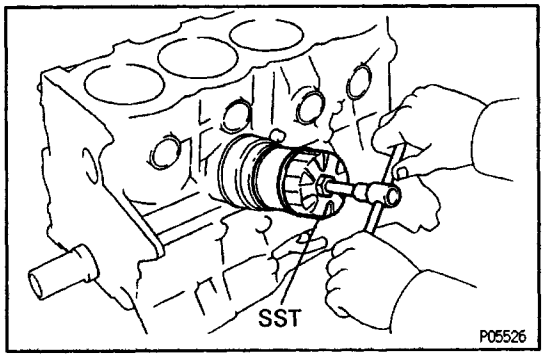

12. REMOVE OIL COOLER

(a) Using SST, remove the oil filter.
SST 09228–06500

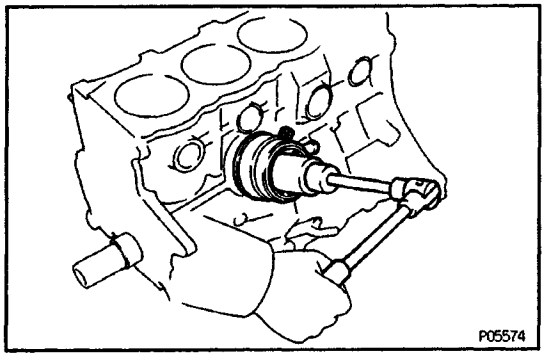

(b) Remove the relief valve and plate washer.
(c) Remove the nut and oil cooler.
(d) Remove the O–ring and gasket from the oil cooler.

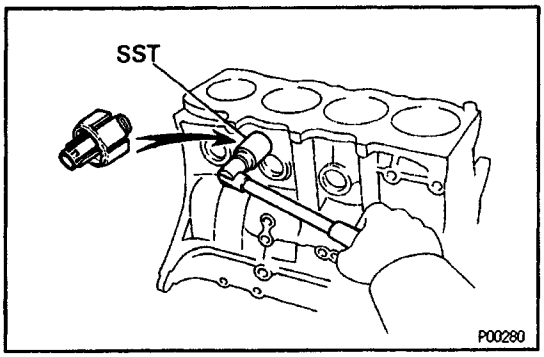

13. REMOVE KNOCK SENSOR

Using SST, remove the knock sensor.
SST 09816 – 30010

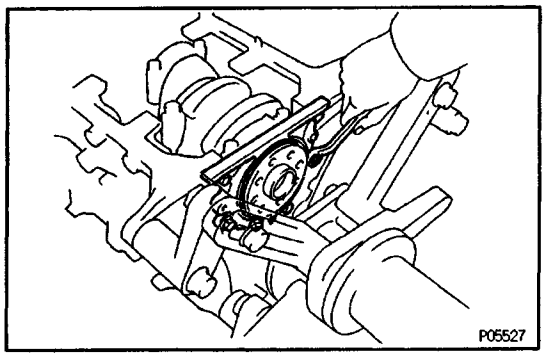

CYLINDER BLOCK DISASSEMBLY EG11L–01

(See Components for Cylinder Block Disassembly and Installation)

1. REMOVE REAR OIL SEAL RETAINER

Remove the six bolts, retainer and gasket.

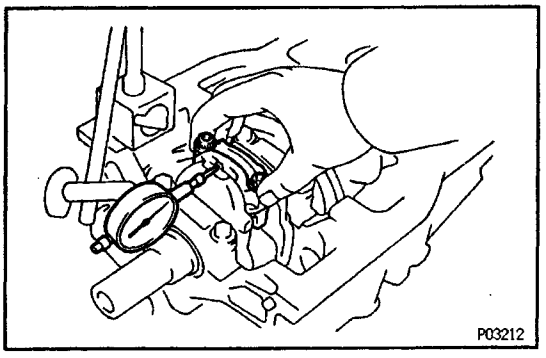

2. CHECK CONNECTING ROD OIL CLEARANCE

Using a dial indicator, measure the thrust clearance while moving the connecting rod back an forth.

Standard thrust clearance:
0.160 – 0.312 mm (0.0063 – 0.0123 in.)

Maximum thrust clearance:
0.35 mm (0.0138 in.)

If the thrust clearance is greater than maximum, replace the connecting rod assembly. If necessary, replace the crankshaft.

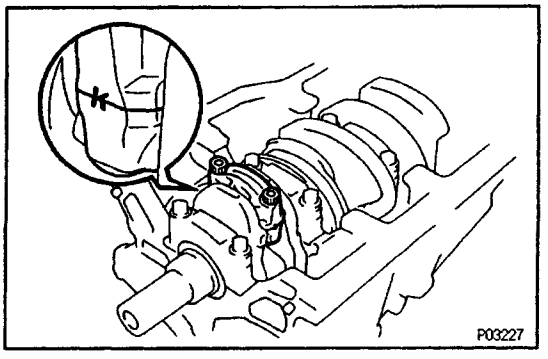

3. REMOVE CONNECTING ROD CAPS AND CHECK OIL CLEARANCE

(a) Check the matchmarks on the connecting rod and cap to ensure correct reassembly.

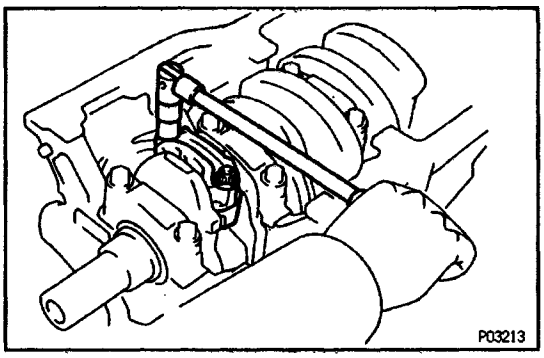

(b) Remove the connecting rod cap nuts.

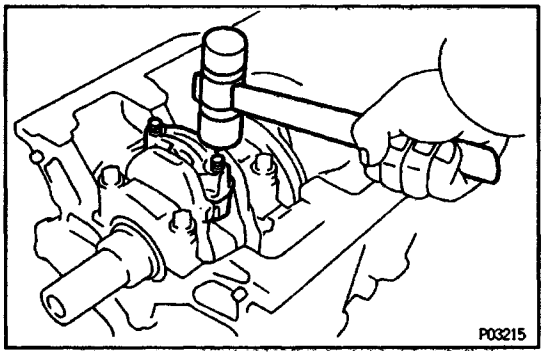

(c) Using a plastic–faced hammer, lightly tap the connecting rod bolts and lift off the connecting rod cap.

HINT: Keep the lower bearing inserted with the connecting rod cap.

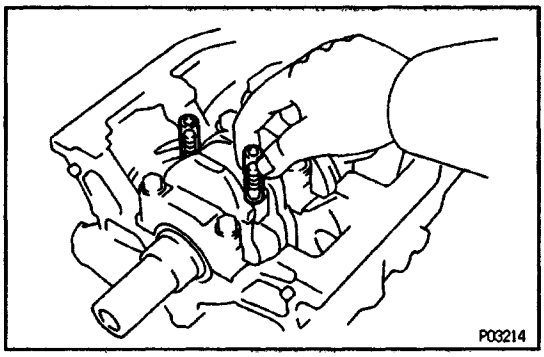

(d) Cover the connecting rod bolts with a short piece of hose to protect the crankshaft from damage.

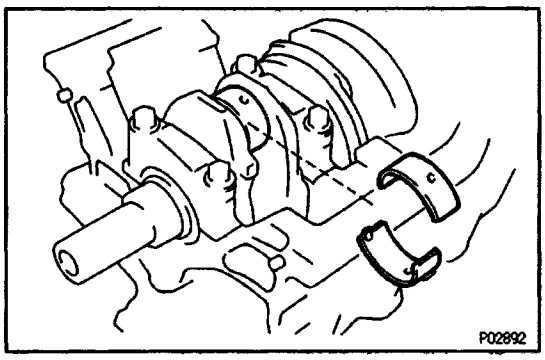

(e) Clean the crank pin and bearing.

(f) Check the crank pin and bearing for pitting and scratches.

If the crank pin or bearing is damaged, replace the bearings. If necessary, grind or replace the crankshaft.

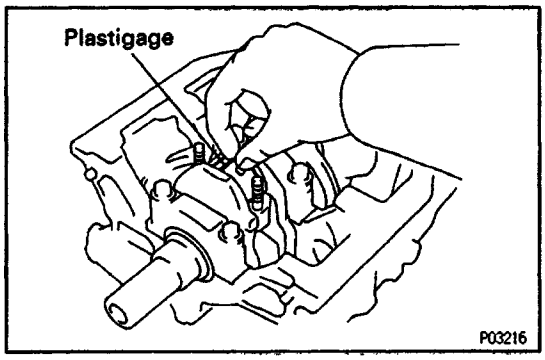

(g) Lay a strip of Plastigage across the crank pin.

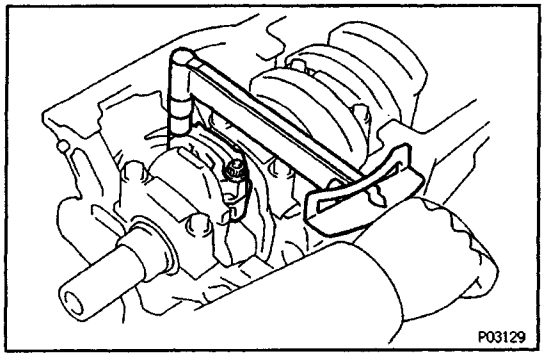

(h) Install the connecting rod cap.
(See step 6 in Cylinder Block Assembly)

1st
Torque: 25 N–m (250 kgf–cm, 18 ft–lbf)
2nd Turn 90°
NOTICE: Do not turn the crankshaft.

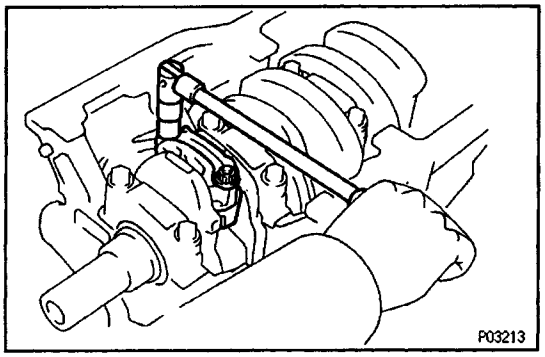

(i) Remove the connecting rod cap.
(See procedure (b) and (c) above)

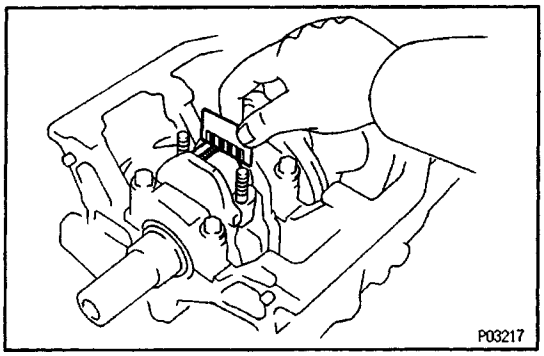

(j) Measure the Plastigage at its widest point.

Standard oil clearance:
STD
0.024 – 0.055 mm (0.0009 – 0.0022 in.)
U/S 0.25
0.023 – 0.069 mm (0.0009 – 0.0027 in.)
Maximum oil clearance:
0.08 mm (0.0031 in.)

If the oil clearance is greater than maximum, replace the bearings. If necessary, grind or replace the cra–nkshaft.

HINT: If using a standard bearing, replace it with one having the same number marked on the connecting rod cap. There are three sizes of standard bearings, marked "'1", "2" and "3" accordingly.

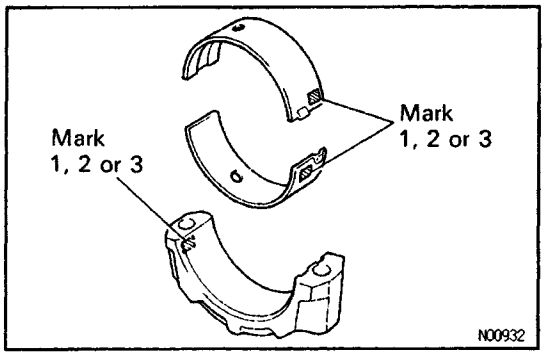

Standard sized bearing center wall thickness:
Mark "1"
1.484 – 1.488 mm (0.0584 – 0.0586 in.)
Mark "2"
1.488 – 1.492 mm (0.0586 – 0.0587 in.)
Mark "3"
1.492 – 1.496 mm (0.0587 – 0.0589 in.)

(k) Completely remove the Plastigage.

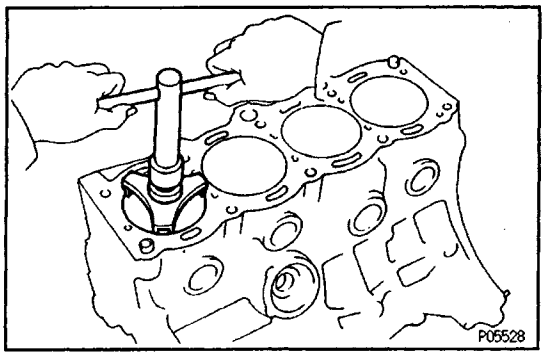

4. REMOVE PISTON AND CONNECTING ROD ASSEMBLIES

(a) Using a ridge reamer, remove all the carbon from the top of the cylinder.

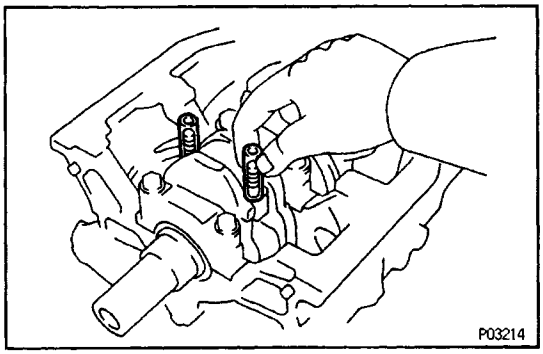

(b) Cover the connecting rod bolts with a short piece of hose to protect the crankshaft from damage.

(e) Push the piston, connecting rod assembly and upper bearing through the top of the cylinder block.

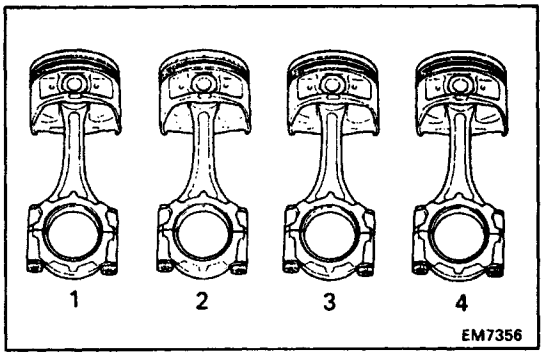

HINT:

- Keep the bearings, connecting rod and cap together.
- Arrange the piston and connecting rod assemblies in correct order.

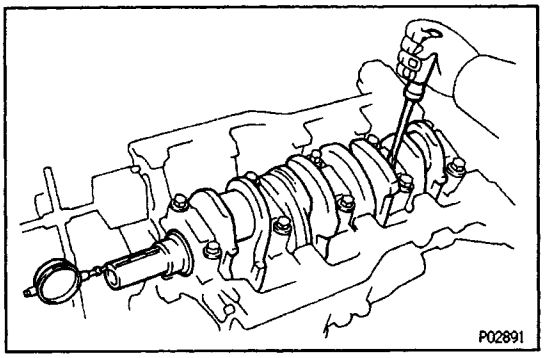

5. CHECK CRANKSHAFT THRUST CLEARANCE

Using a dial indicator, measure the thrust clearance while prying the crankshaft back and forth with a screwdriver.

Standard thrust clearance:

0.020 – 0.220 mm (0.0008 – 0.0087 in.)

Maximum thrust clearance:

0.30 mm (0.0118 in.)

If the thrust clearance is greater than maximum, replace the thrust washers as a set.

Thrust washer thickness:

2.440 – 2.490 mm (0.0961 – 0.0980 in.)

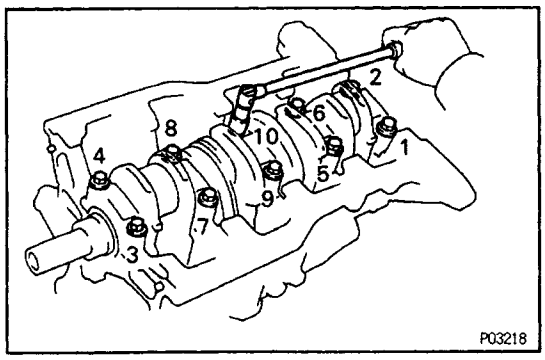

6. REMOVE MAIN BEARING CAPS AND CHECK OIL CLEARANCE

(a) Uniformly loosen and remove the main bearing cap bolts in several passes, in the sequence shown.

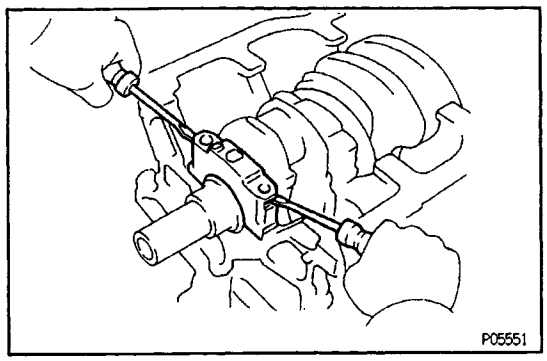

(b) Using two screwdrivers, pry out the main bearing cap, and remove the main bearing caps, lower bearings and lower thrust washers (No.3 main bearing cap only).

HINT:

- Keep the lower bearing and main bearing cap together.
- Arrange the main bearing caps and lower thrust washers in correct order.

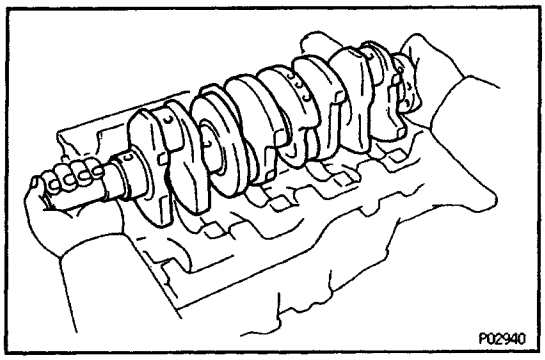

(c) Lift out the crankshaft.

HINT: Keep the upper bearing and upper thrust washers together with the cylinder block.

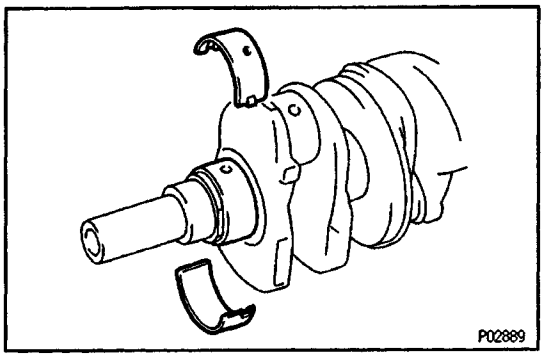

(d) Clean each main journal and bearing.

(e) Check each main journal and bearing for pitting and scratches.

If the journal or bearing is damaged, replace the bearings. If necessary, grind or replace the crankshaft.

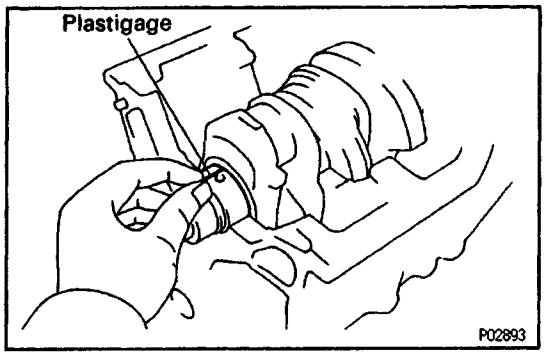

(f) Place the crankshaft on the cylinder block.

(g) Lay a strip of Plastigage across each journal.

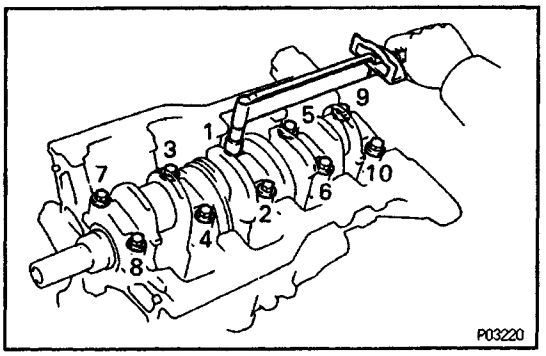

(h) Install the main bearing caps.
(See step 4 in Cylinder Block Assembly)

Torque: 59 N–m (600 kgf–cm, 43 ft–lbf)

NOTICE: Do not turn the crankshaft.

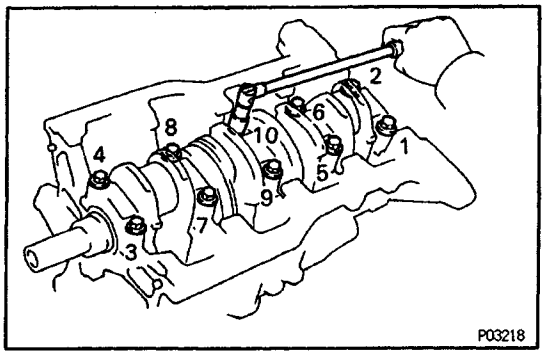

(i) Remove the main bearing caps.
(See procedure (a) and (b) above)

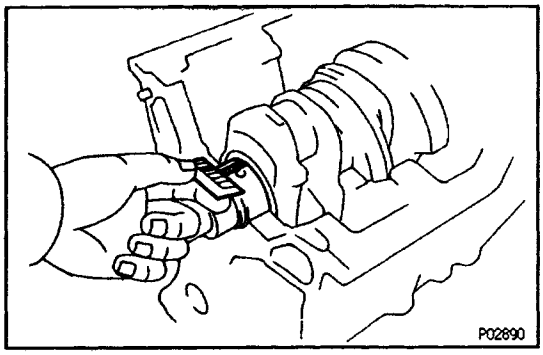

(j) Measure the Plastigage at its widest point.

Standard clearance:

No–3

STD

0.025 – 0.044 mm (0.0010 – 0.0017 in.)

U/S 0.25

0.027 – 0.067 mm (0.0011 – 0.0026 in.)

Others

STD

0.015 – 0.034 mm (0.0006 – 0.0013 in.)

U/S 0.25

0.019 – 0.059 mm (0.0007 – 0.0023 in.)

Maximum clearance:

0.08 mm (0.0031 in.)

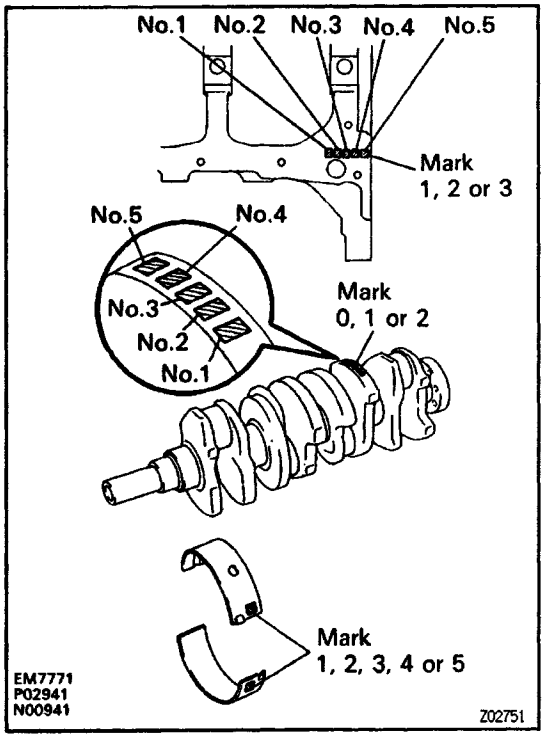

HINT: If replacing the cylinder block subassembly, the bearing standard clearance will be:

No.3

0.027 – 0.054 mm (0.0011 – 0.0021 in.)

Others

0.017 – 0.044 mm (0.0007 – 0.0017 in.)

If the oil clearance is greater than maximum, replace the bearings. If necessary, grind or replace the cra–nkshaft.

HINT: If using a standard bearing, replace it with one having the same number. If the number of the bearing cannot be determined, select the correct bearing by adding together the numbers imprinted on the cylinder block and crankshaft, then selecting the bearing with the same number as the total. There are five sizes of standard bearings, marked ’1’, ”2”, ”3”, ”4” and ”5” accordingly.

	Number marked								
Cylinder block	1			2			3		
Crankshaft	0	1	2	0	1	2	0	1	2
Use bearing	1	2	3	2	3	4	3	4	5

EXAMPLE: Cylinder block ”2” + Crankshaft ”1 ”
= Total number 3 (Use bearing ”3”)

V00240

(Reference)
Cylinder block main journal bore diameter:
Mark ”1”
59.020– 59.026 mm (2.3236 – 2.3239 in.)
Mark “2”
59.026 – 59.032 mm (2.3239 – 2.3241 in.)
Mark “3”
59.032 – 59.038 mm (2.3241 – 2.3243 in.)
Crankshaft journal diameter:
Mark ”0”
54.998 – 55.003 mm (2.1653 – 2.1655 in.)
Mark ’1’
54.993 – 54.998 mm (2.1651 – 2.1653 in.)
Mark ”2”
54.988 – 54.993 mm (2.1649 – 2.1651 in.)
Standard sized bearing center wall thickness:
No.3
Mark ”1”
1.992 – 1.995 mm (0.0784 – 0.0785 in.)
Mark “2”
1.995 – 1.998 mm (0.0785 – 0.0787 in.)
Mark “3”
1.998 – 2.001 mm (0.0787 – 0.0788 in.)
Mark ”4”
2.001 – 2.004 mm (0.0788 – 0.0789 in.)
Mark “5”
2.004 – 2.007 mm (0.0789 – 0.0790 in.)
Others
Mark ”1”
1.997 – 2.000 mm (0.0786 – 0.0787 in.)
Mark ”2”
2.000 – 2.003 mm (0.0787 – 0.0789 in.)
Mark ”3”
2.003 – 2.006 mm (0.0789 – 0.0790 in.)
Mark “4”
2.006 – 2.009 mm (0.0790 – 0.0791 in.)
Mark “5”
2.009 – 2.012 mm (0.0791 – 0.0792 in.)
(k) Completely remove the Plastigage.

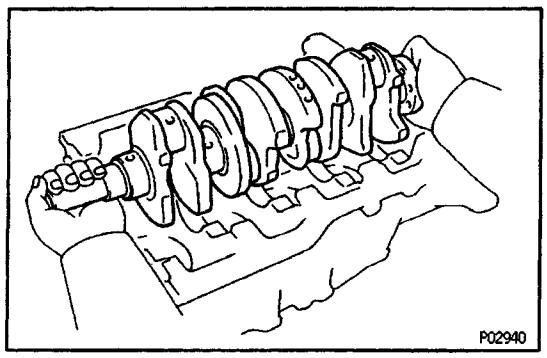

7. REMOVE CRANKSHAFT

(a) Lift out the crankshaft.
(b) Remove the upper bearings and upper thrust washers from the cylinder block.

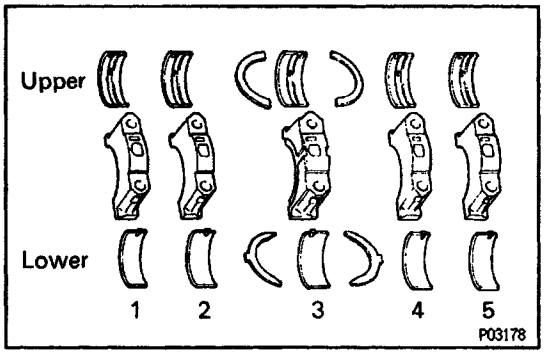

HINT: Arrange the main bearing caps, bearings and thrust washers in correct order.

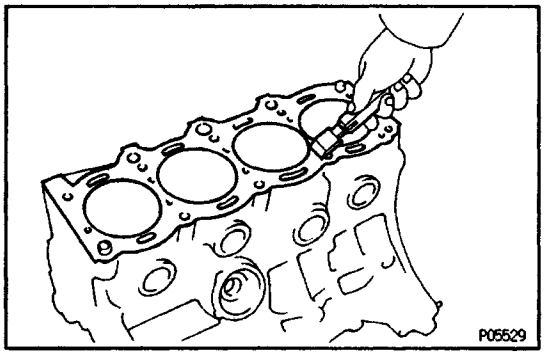

EG08U–04

CYLINDER BLOCK INSPECTION

1. CLEAN CYLINDER BLOCK

A. Remove gasket material

Using a gasket scraper, remove all the gasket material from the top surface of the cylinder block.

B. Clean cylinder block

Using a soft brush and solvent, thoroughly clean the cylinder block.

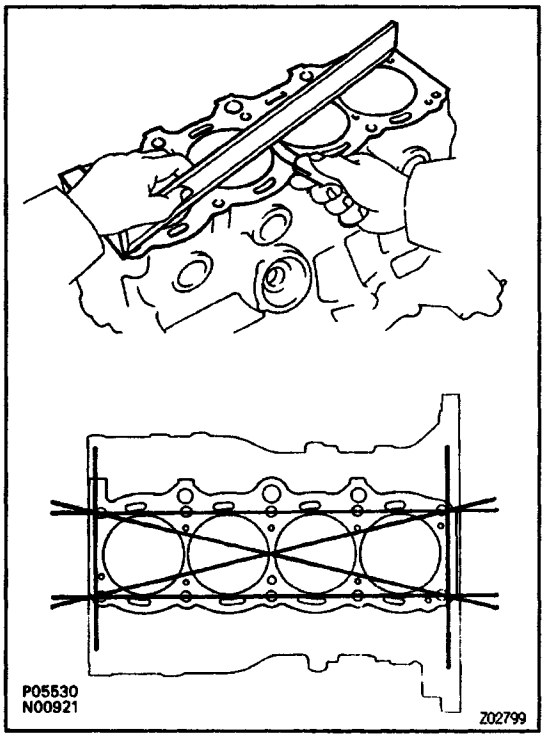

2. INSPECT TOP SURFACE OF CYLINDER BLOCK FOR FLATNESS

Using a precision straight edge and feeler gauge, measure the surfaces contacting the cylinder head gasket for warpage.

Maximum warpage:

0.05 mm (0.0020 in.)

If warpage is greater than maximum, replace the cyl–inder block.

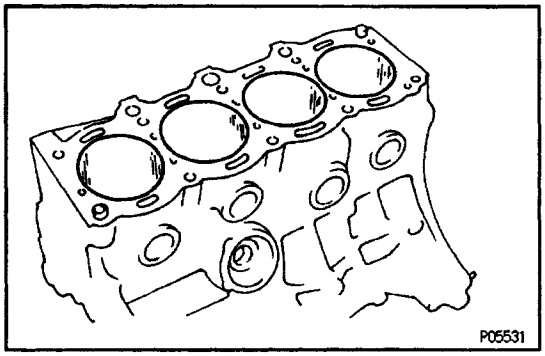

3. INSPECT CYLINDER FOR VERTICAL SCRATCHES

Visually check the cylinder for vertical scratches.

If deep scratches are present, rebore all the four cylinders. If necessary, replace the cylinder block.

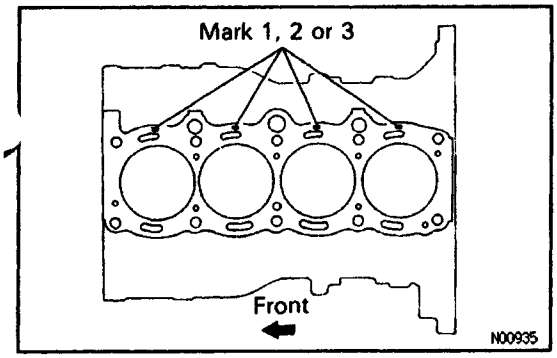

4. INSPECT CYLINDER BORE DIAMETER

HINT: There are three sizes of the standard cylinder bore diameter, marked ”1”, ”2” and ”3” accordingly. The mark is stamped on the top of the cylinder block.

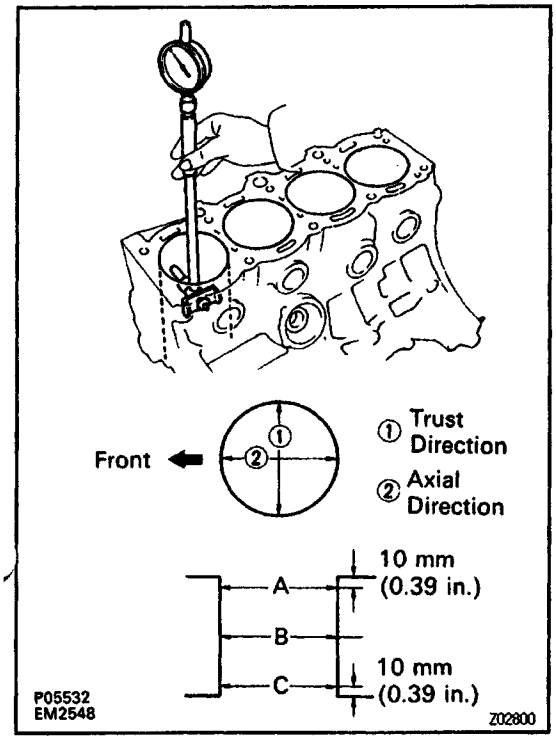

Using a cylinder– gauge, measure the cylinder bore diameter at positions A, B and C in the thrust and axial directions.

Standard diameter:

STD

Mark “1”

87.000 – 87.010 mm (3.4252 – 3.4256 in.)

Mark “2”

87.010 – 87.020 mm (3.4256 – 3.4260 in.)

Mark “3”

87.020 – 87.030 mm (3.4260 – 3.4264 in.)

Maximum diameter:

STD

87.23 mm (3.4342 in.)

O/S 0.50

87.73 mm (3.4350 in.)

If the diameter is greater than maximum, rebore all the four cylinders. If necessary, replace the cylinder block.

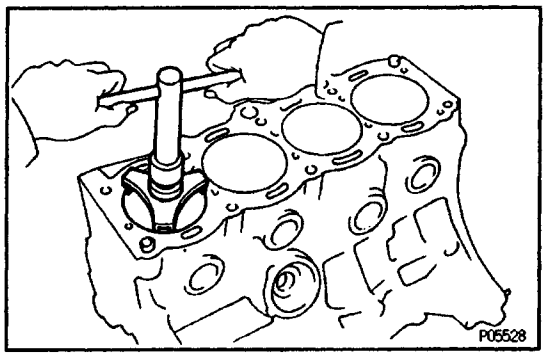

5. REMOVE CYLINDER RIDGE

If the wear is less than 0.2 mm (0.008 in.), using a ridge reamer, grind the top of the cylinder.

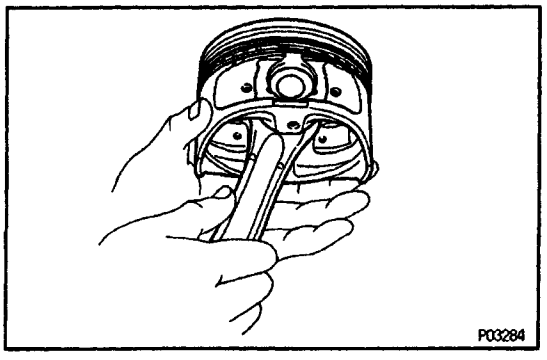

PISTON AND CONNECTING ROD ASSY DISASSEMBLY

EG08V–04

1. CHECK FIT BETWEEN PISTON AND PISTON PIN

Try to move the piston back and forth on the piston pin.

If any movement is felt, replace the piston and pin as a set.

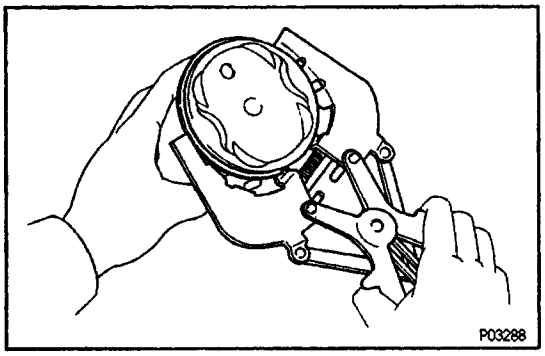

2. REMOVE PISTON RINGS

(a) Using a piston ring expander, remove the two compression rings.

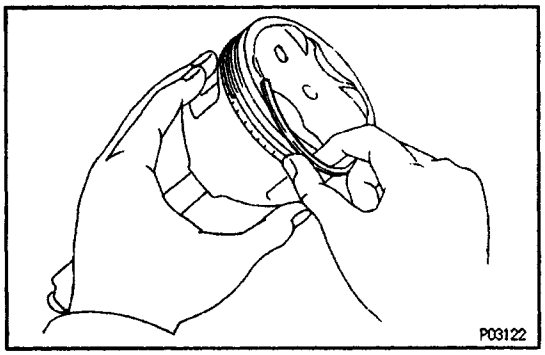

(b) Remove the two side rails and oil ring by hand.

HINT: Arrange the piston rings in correct order only.

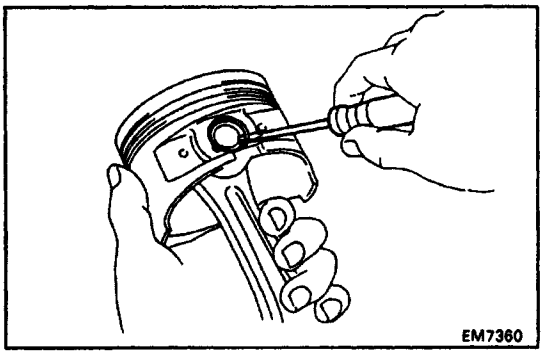

3. DISCONNECT CONNECTING ROD FROM PISTON

(a) Using a small screwdriver, pry out the two snap rings.

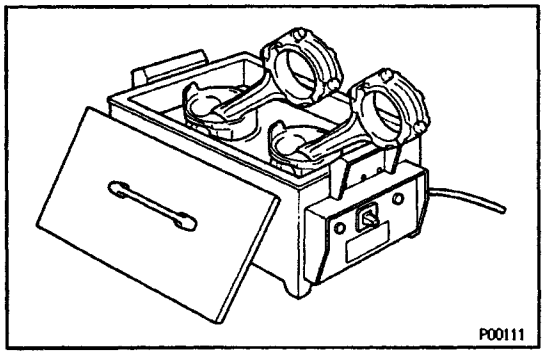

(b) Gradually heat the piston to 80 – 90˚C (1176 – 194˚F).

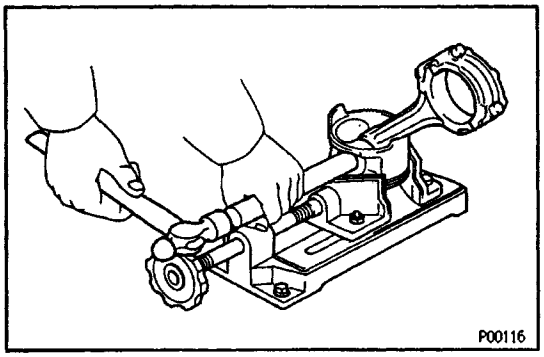

(c) Using plastic–faced hammer and brass bar, lightly tap out the piston pin and remove the connecting rod.

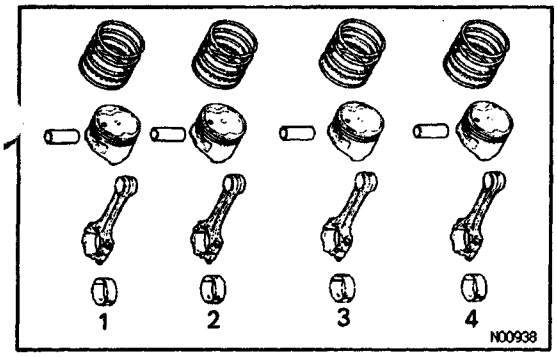

HINT:

- The piston and pin are a matched set.
- Arrange the pistons, pins, rings, connecting rods and bearings in correct order.

PISTON AND CONNECTING ROD INSPECTION

5G08W–02

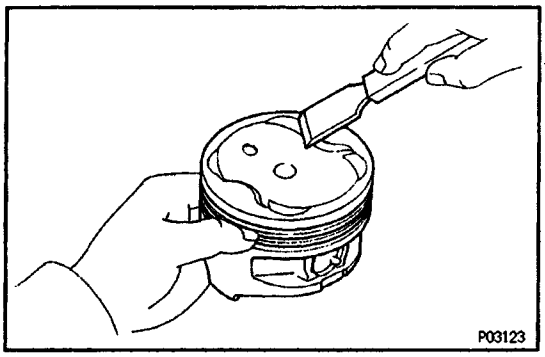

1. CLEAN PISTON

(a) Using a gasket scraper, remove the carbon from the piston top.

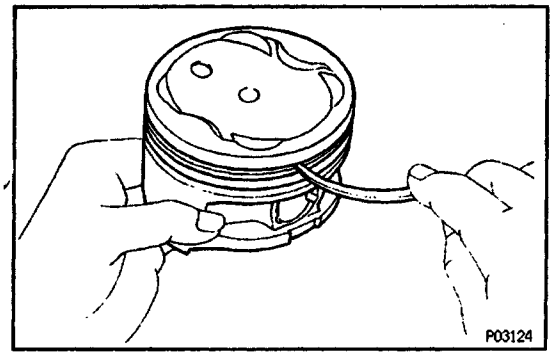

(b) Using a groove cleaning tool or broken ring, clean the piston ring grooves.

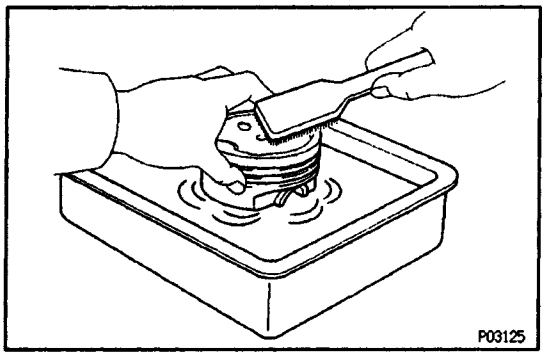

(c) Using solvent and a brush, thoroughly clean the piston.

NOTICE: Do not use a wire brush.

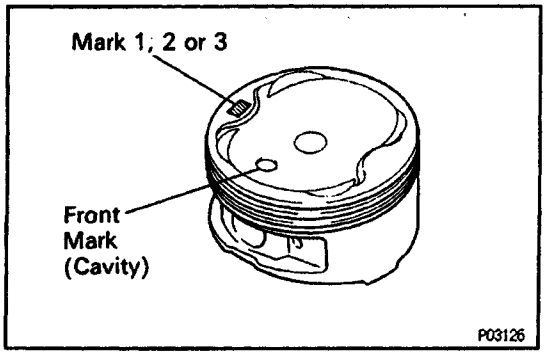

2. INSPECT PISTON

A. Inspect piston oil clearance

HINT: There are three sizes of the standard piston diameter, marked ”1”, ”2” and ”3” accordingly. The mark is stamped on the piston top.

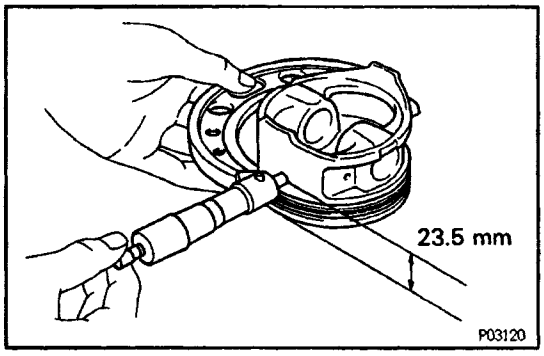

(a) Using a micrometer, measure the piston diameter at ring angles to the piston pin center line, 23.5 mm (0.925 in.) from the piston head.

Piston diameter:
STD
Mark ”1”
86.850 – 86.860 mm (3.4193 – 3.4197 in.)
Mark ’2’
86.860 – 86.870 mm (3.4197 – 3.4201 in.)
Mark ’3”
86.870 – 86.880 mm (3.4201 – 3.4205 in.)
O/S 0.50
87.350 – 87.380 mm (3.4390 – 3.4402 in.)

(b) Measure the cylinder bore diameter in the thrust di–rections. (See step 4 in Cylinder Block Inspection)

(c) Subtract the piston diameter measurement from the cylinder bore diameter measurement.

Standard oil clearance:
0.14 – 0.16 mm (0.0055 – 0.0063 in.)
Maximum oil clearance:
0.18 mm (0.0071 in.)

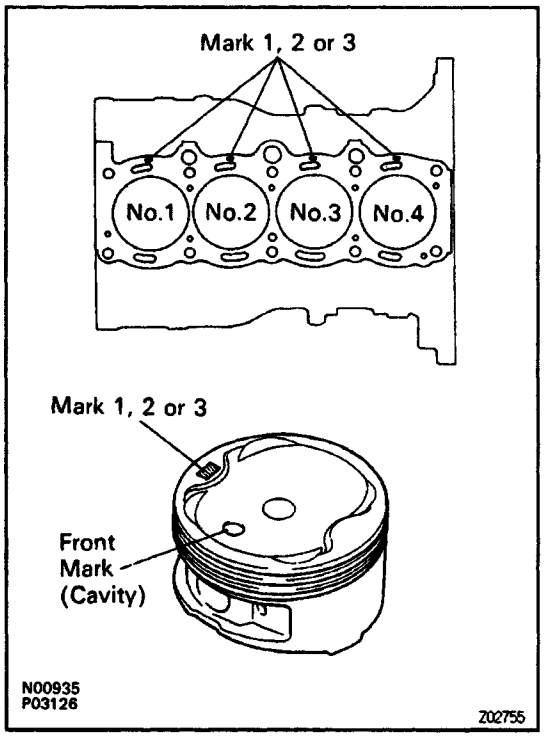

If the oil clearance is greater than maximum, replace all the four pistons and rebore all the four cylinders. If necessary, replace the cylinder block.

HINT (Use new cylinder block): Use a piston with the same number mark as the cylinder bore diameter marked on the cylinder block.

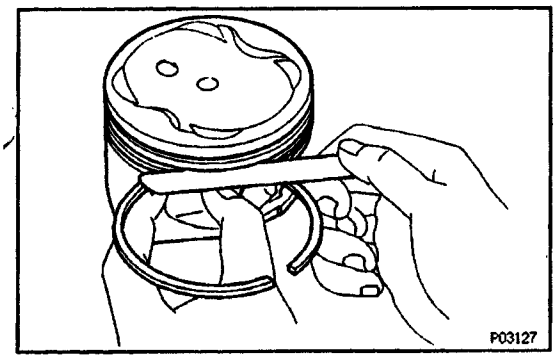

B. Inspect piston ring groove clearance

Using a feeler gauge, measure the clearance between new piston ring and the wall of the ring groove.

Ring groove clearance:

No.1

0.040 – 0.080 mm (0.0016 – 0.0031 in.)

No.2

0.030 – 0.070 mm (0.0012 – 0.0028 in.)

If the clearance is greater than maximum, replace the piston.

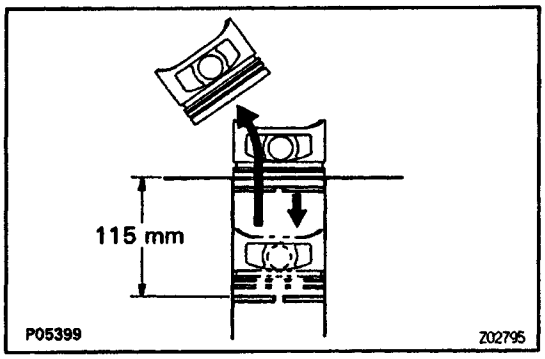

C. Inspect piston ring end gap

(a) Insert the piston ring into the cylinder bore.

(b) Using a piston, push the piston ring a little beyond the bottom of the ring travel, 115 mm (4.53 in.) from the top of the cylinder block.

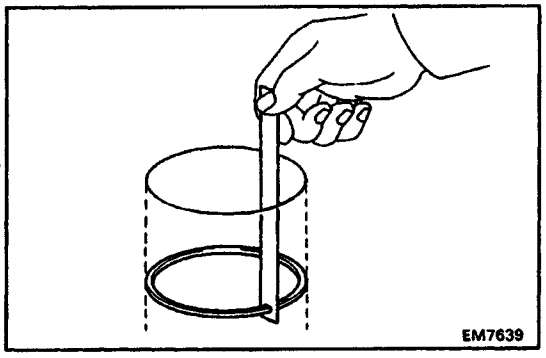

(c) Using a feeler gauge, measure the end gap.

Standard end gap:

No.1

0.270 – 0.500 mm (0.0106 – 0.0197 in.)

No.2

0.350 – 0.600 mm (0.0138 – 0.0234 in.)

Oil (Side rail)

0.200 – 0.550 mm (0.0079 – 0.0217 in.)

Maximum end gap:

No.1

1.10 mm (0.0433 in.)

No–2

1.20 mm (0.0472 in.)

Oil (Side rail)

1.15 mm (0.0453 in.)

If the end gap is greater than maximum, replace the piston ring. If the end gap is greater than maximum, even with a new piston ring, rebore all the four cyl–inders or replace the cylinder block.

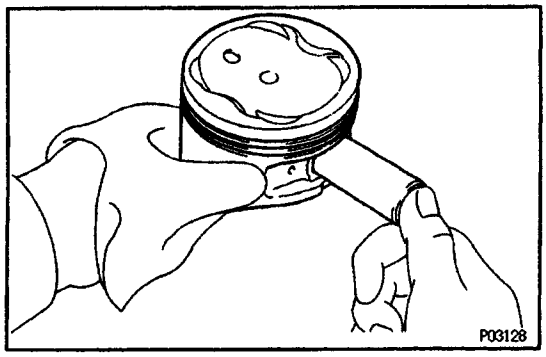

D. Inspect piston pin fit

At 60°C (140°F), you should be able to push the piston pin into the piston pin hole with your thumb.

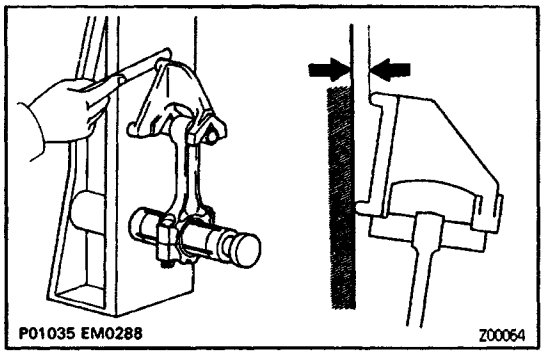

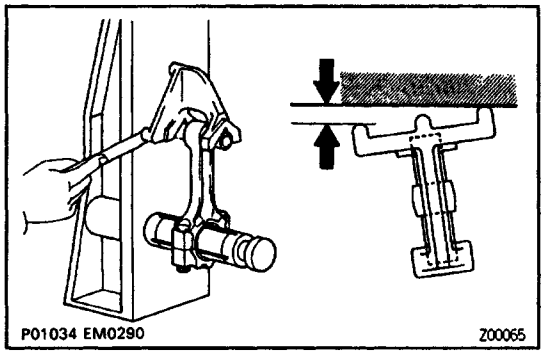

3. INSPECT CONNECTING ROD

A. Inspect connecting rod alignment

Using a rod aligner and feeler gauge, check the connecting rod alignment.

- Check for bend.

Maximum bend:

0.05 mm (0.0020 in.) per 100 mm (3.94 in.)

If bend is greater than maximum, replace the connecting rod assembly.

Check for twist

Maximum twist:

0.15 mm (0.0059 in.) per 100 mm (3.94 in.)

If twist is greater than maximum, replace the connecting rod assembly.

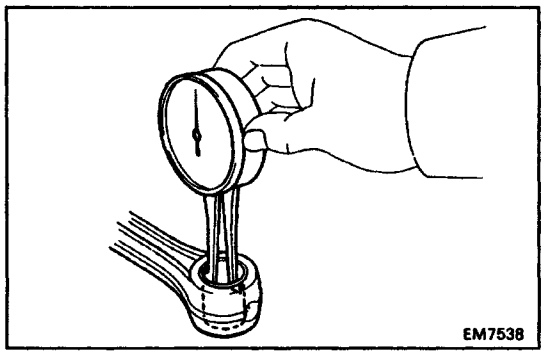

B. Inspect piston pin oil clearance

(a) Using a caliper gauge, measure the inside diameter of the connecting rod bushing.

Bushing inside diameter:

22.005 – 22.017 mm (0.8663 – 0.8668 in.)

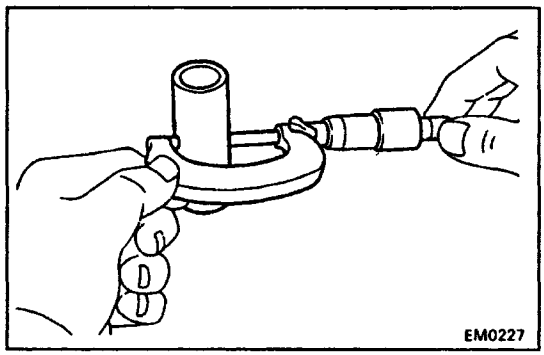

(b) Using a micrometer, measure the piston pin diameter.

Piston pin diameter:

21.997 – 22.009 mm (0.8660 – 0.8665 in.)

(c) Subtract the piston pin diameter measurement from the bushing inside diameter measurement.

Standard oil clearance:

0.005 – 0.011 mm (0.0002 – 0.0004 in.)

Maximum oil clearance:

0.05 mm (0.0020 in.)

If the oil clearance is greater than maximum, replace the bushing. If necessary, replace the piston and piston pin as a set.

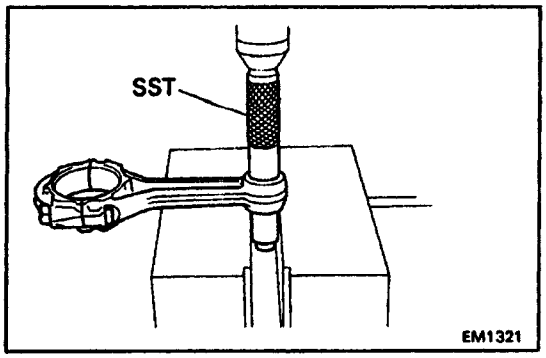

C. If necessary, replace connecting rod bushing

(a) Using SST and a press, press out the bushing.
SST 09222–30010

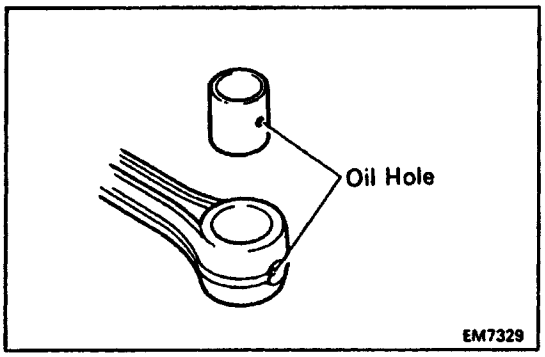

(b) Align the oil holes of a new bushing and the conne–cting rod.

(c) Using SST and a press, press in the bushing.
SST 09222–30010

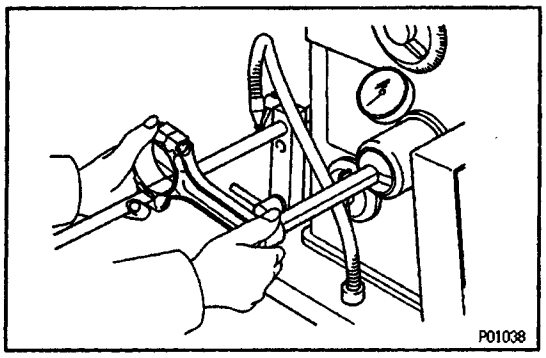

(d) Using a pin hole grinder, hone the bushing to obtain the standard specified clearance (see step B above) between the bushing and piston pin.

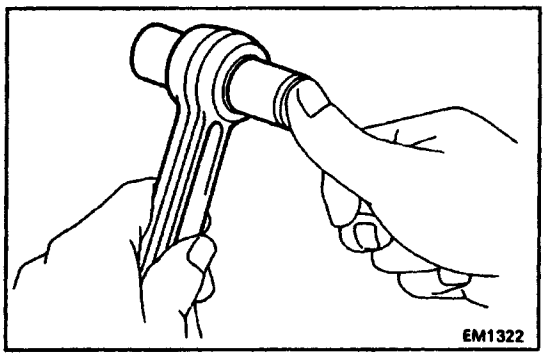

(e) Check the piston pin fit at normal room temperature. Coat the piston pin with engine oil, and push it into the connecting rod with your thumb.

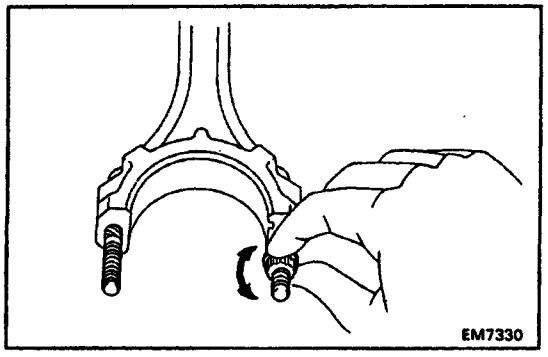

D. Inspect connecting rod bolts

(a) Install the cap nut to the connecting rod bolt. Check that the cap nut can be turned easily by hand to the end of the thread.

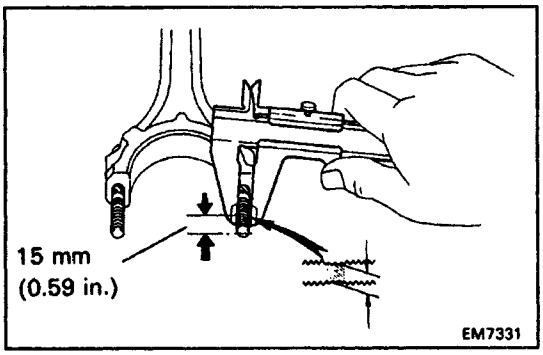

(b) If the cap nut cannot be turned easily, measure the outside diameter– of the connecting rod bolt with a vernier caliper.

Standard diameter:

7.860 – 8.000 mm (0.3094 – 0.3150 in.)

Maximum diameter:

7.60 mm (0.2992 in.)

HINT: If the location of this area cannot be judged by visual inspection, measure the outer diameter at the location shown in the illustration.

If the outside diameter is less than minimum, replace the connecting rod bolt and nut as a set.

6911M–01

CYLINDER BORING

HINT:

- Bore all the four cylinders for the oversized piston outside diameter.
- Replace all the piston rings with ones to match the oversized pistons.

1. KEEP OVERSIZED PISTONS

Oversized piston diameter:

O/S 0.50

87.350 – 87.380 mm (3.4390 – 3.4402 in.)

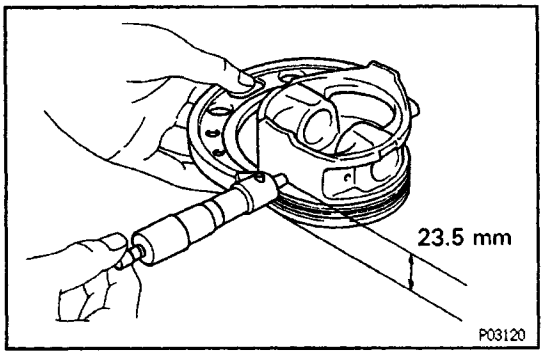

2. CALCULATE AMOUNT TO BORE CYLINDERS

(a) Using a micrometer, measure the piston diameter at right angles to the piston pin center line, 23.5 mm (0.925 in.) from the piston head.

(b) Calculate the amount of each cylinder is to be rebored as follows:

Size to be rebored = P + C – H

P = Piston diameter

C = Piston oil clearance

0.140 – 0.160 mm (0.0055 – 0.0063 in.)

H = Allowance for honing

0.20 mm (0.0008 In.) or less

3. BORE AND HONE CYLINDER TO CALCULATED DI–MENSIONS

Maximum honing:

0.02 mm (0.0008 in.)

NOTICE: Excess honing will destroy the finished round–ness.

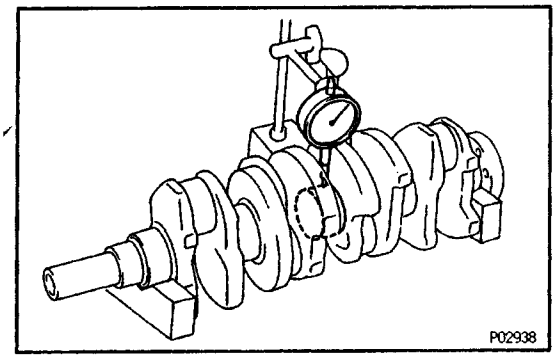

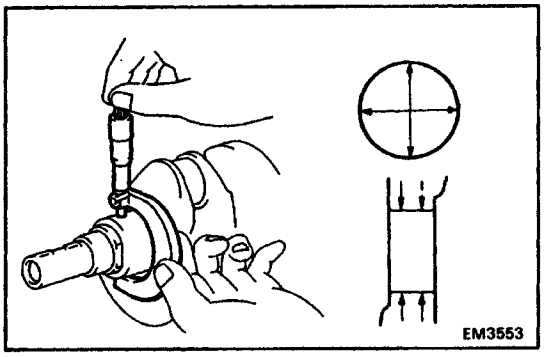

CRANKSHAFT INSPECTION AND REPAIR

1. INSPECT CRANKSHAFT FOR CIRCLE RUNOUT

(a) Place the crankshaft on V–blocks.

(b) Using a dial indicator, measure the circle runout at the center journal.

Maximum circle runout

0.06 mm (0.0024 in.)

If the circle runout is greater than maximum, replace the crankshaft.

2. INSPECT MAIN JOURNALS AND CRANK PINS

(a) Using a micrometer, measure the diameter of each main journal and crank pin.

Main journal diameter:

STD

54.988 – 55.003 mm (2.1653 – 2.1655 in.)

U/S 0.25

54.745 – 54.755 mm (2.1553 – 2.1557 in.)

Crank pin diameter:

STD

51.985 – 52.000 mm (2.0466 – 2.0472 in.)

U/S 0.25

51.745 – 51.755 mm (2.0372 – 2.0376 in.)

If the diameter is not as specified, check the oil clearance (See steps 3 and 6 in Cylinder Block Disassembly). If necessary, grind or replace the crankshaft.

(b) Check each main journal and crank pin for taper and out–of–round as shown.

Maximum taper and out–of–round:

0.02 mm (0.0008 In.)

If the taper and out–of–round is greater than maximum, replace the crankshaft.

3. IF NECESSARY, GRIND AND HONE MAIN JOURNALS AND/OR CRANK PINS

Grind and hone the main journals and/or crank pins to the finished undersized diameter (See procedure in step 2).

Install new main journal and/or crankshaft pin undersized bearings.

CRANKSHAFT OIL SEALS REPLACEMENT

HINT: There are two methods (A and B) to replace the oil seal which are as follows:

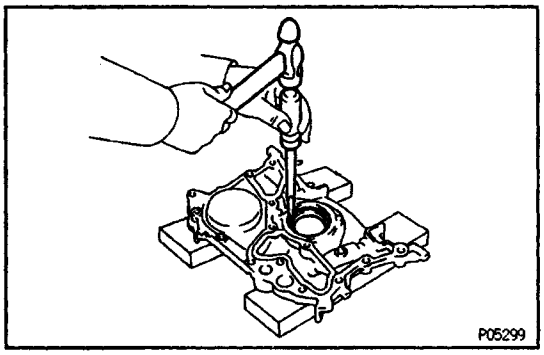

1. REPLACE CRANKSHAFT FRONT OIL SEAL

A. If oil pump is removed from cylinder block:

(a) Using a screwdriver and hammer, tap out the oil seal.

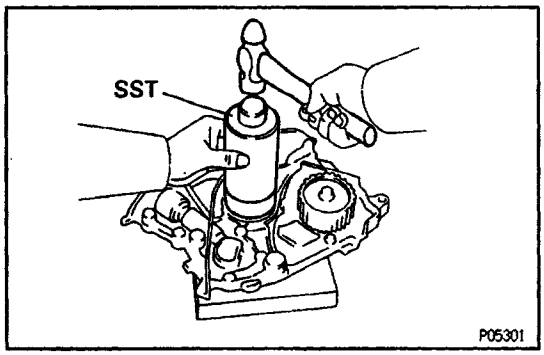

(b) Using SST and a hammer, tap in a new oil seal until its surface is flush with the oil pump case edge.
SST 09226–10010

(c) Apply MP grease to the oil seal lip.

B. If oil pump is installed to the cylinder block:

(a) Using a knife, cut off the oil seal lip.

(b) Using a screwdriver, pry out the oil seal.

NOTICE: Be careful not to damage the crankshaft. Tape the screwdriver tip.

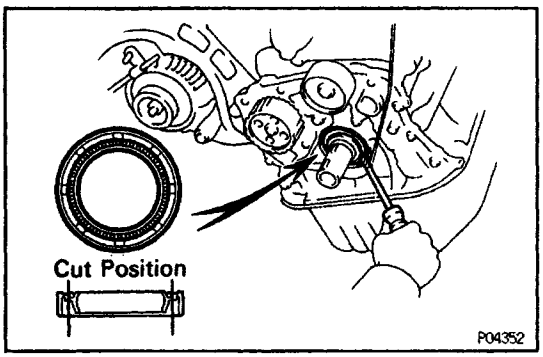

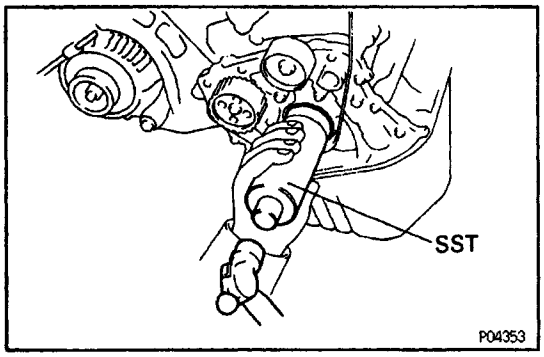

(c) Apply MP grease to a new oil seal lip.

(d) Using SST and a hammer, tap in the oil seal until its surface is flush with the oil pump case edge.
SST 09226–10010

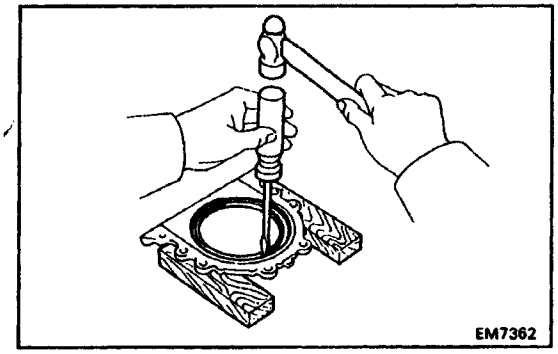

2. REPLACE CRANKSHAFT REAR OIL SEAL

A. If rear oil seal retainer is removed from cylinder block:

(a) Using a screwdriver and hammer, tap out the oil seal.

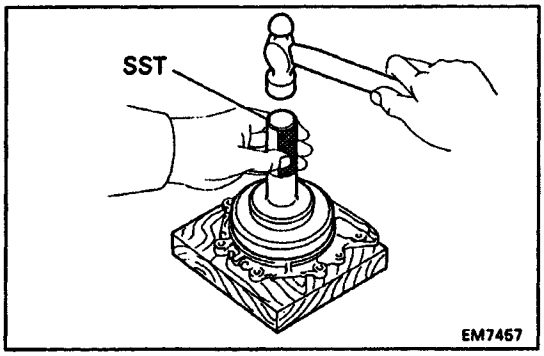

(b) Using SST and a hammer, tap in a new oil seal until its surface is flush with the rear oil seal edge.
SST 09223–63010

(c) Apply MP grease to the oil seal lip.

B. If rear oil seal retainer is installed to cylinder block:

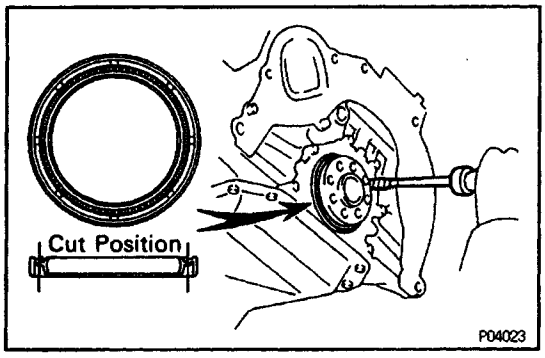

(a) Using a knife, cut off the oil seal lip.

(b) Using a screwdriver, pry out the oil seal.

NOTICE: Be careful not to damage the crankshaft. Tape the screwdriver tip.

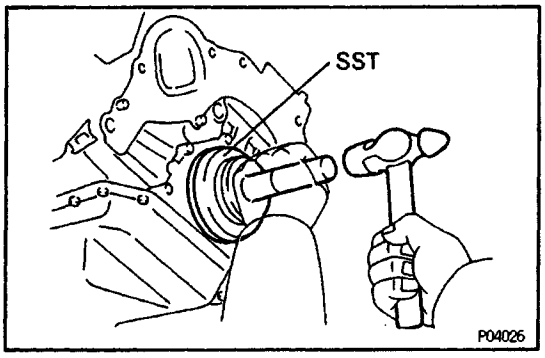

(c) Apply MP grease to a new oil seal lip.

(d) Using SST and a hammer, tap in the oil seal until its surface is flush with the rear oil seal retainer edge.
SST 09223–63010

E9GC1–04

PISTON AND CONNECTING ROD ASSEMBLY

1. ASSEMBLE PISTON AND CONNECTING ROD

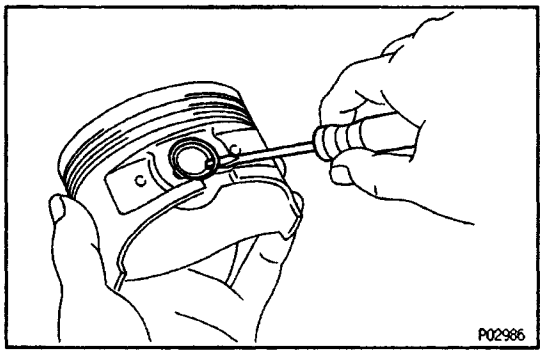

(a) Using a small screwdriver, install a new snap ring on one side of the piston pin hole.

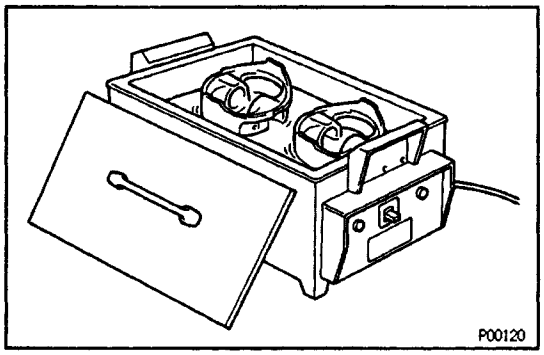

(b) Gradually heat the piston to 80 – 90°C (176 – 194°F).

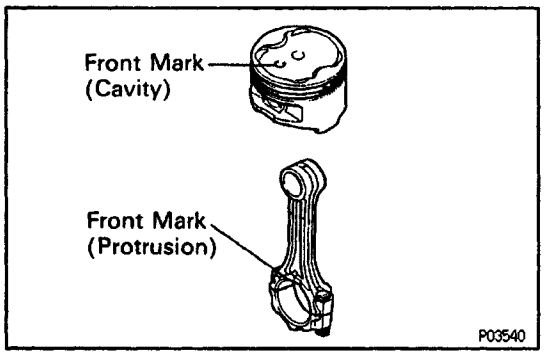

(c) Coat the piston pin with engine oil.

(d) Align the front marks of the piston and connecting rod, and push in the piston pin with your thumb.

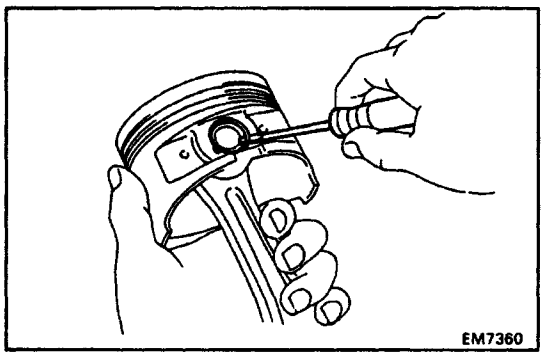

(e) Using a small screwdriver, install a new snap ring on the other side of the piston pin hole.

2. INSTALL PISTON RINGS

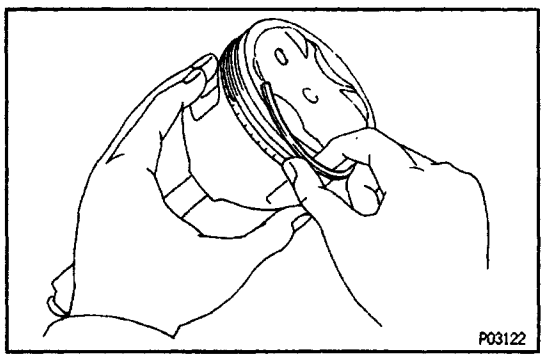

(a) Install the oil ring expander and two side rails by hand.

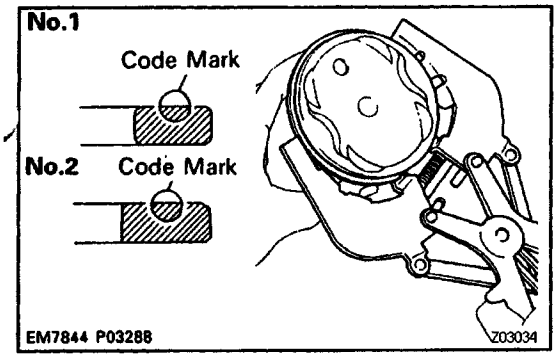

(b) Using a piston ring expander, install the two compression rings with the code mark facing upward. Code mark:

No.1

1 Nor T

No.2

2N or 2T

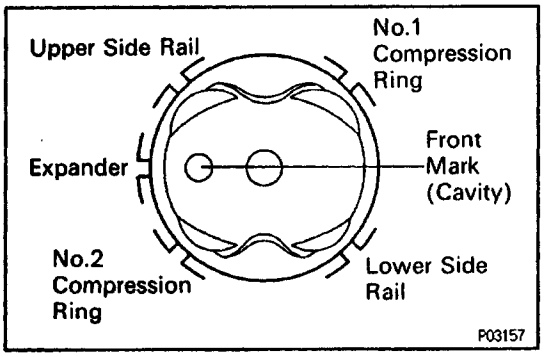

(c) Position the piston rings so that the ring ends are as shown.

NOTICE: Do not align the ring ends.

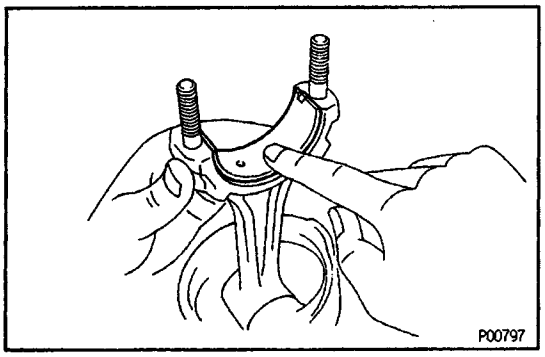

3. INSTALL BEARINGS

(a) Align the bearing claw with the groove of the connecting rod or connecting cap.

(b) Install the bearings in the connecting rod and connecting rod cap.

CYLINDER BLOCK ASSEMBLY

(See Components for Cylinder block Disassembly and Installation)

HINT:

- Thoroughly clean all parts to be assembled.
- Before installing the parts, apply new engine oil to all sliding and rotating surfaces.
- Replace all gaskets, 0–rings and oil seals with new parts.

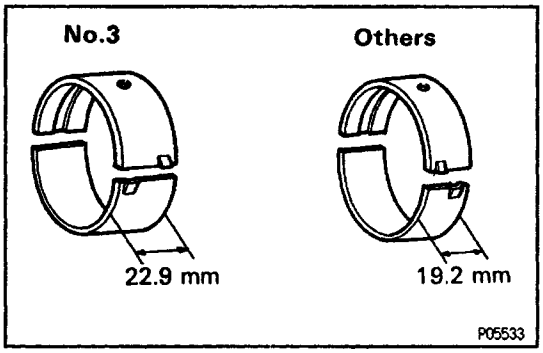

1. INSTALL MAIN BEARINGS

HINT:

- Main bearings come in widths of 19.2 mm (0.756 in.) and 22.9 mm (0.902 in.). Install the 22.9 mm (0.902 in.) bearings in the No.3 cylinder block journal position with the main bearing cap. Install the 19.2 mm (0.756 in.) bearings in the other positions.
- Upper bearings have an oil groove and oil holes; lower bearings do not.

(a) Align the bearing claw with the claw groove of the cylinder block, and push in the five upper bearings.

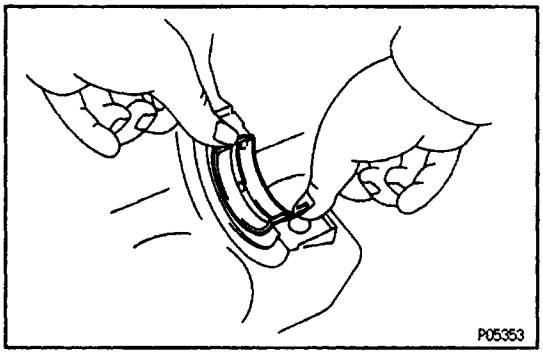

(b) Align the bearing claw with the claw groove of the main bearing cap, and push in the five lower bearings.

HINT: A number is marked on each main bearing cap to indicate the installation position.

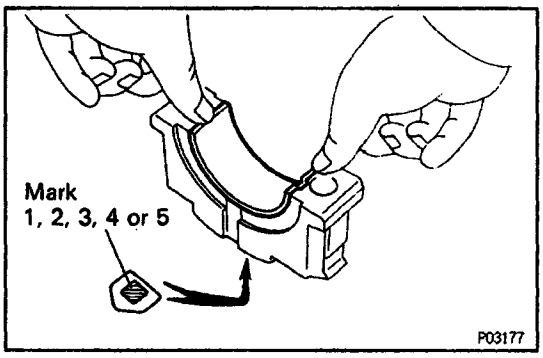

2. INSTALL UPPER THRUST WASHERS

Install the two thrust washers under the No.3 journal position of the cylinder block with the oil grooves facing outward.

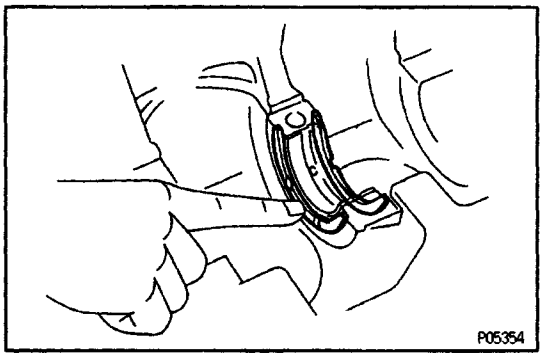

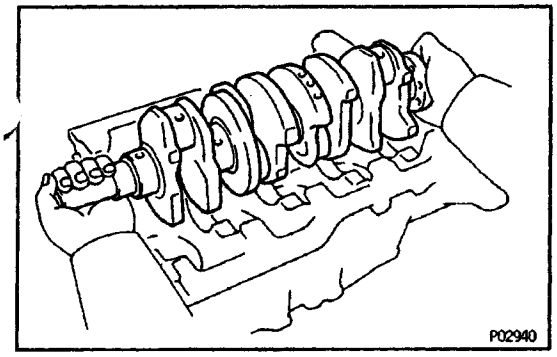

3. PLACE CRANKSHAFT ON CYLINDER BLOCK

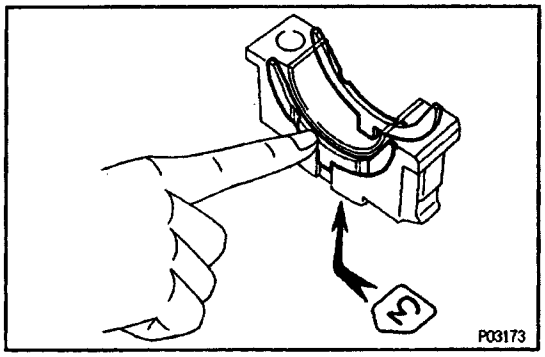

4. INSTALL MAIN BEARING CAPS AND LOWER THRUST WASHERS

(a) Install the two thrust washers on the No.3 bearing cap with the grooves facing outward.

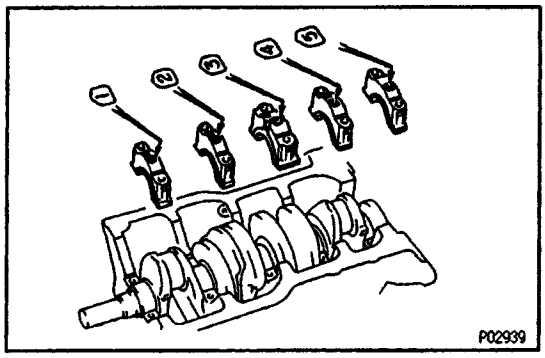

(b) Install the five main bearing caps in their proper locations.

HINT: Each bearing cap has a number and front mark.

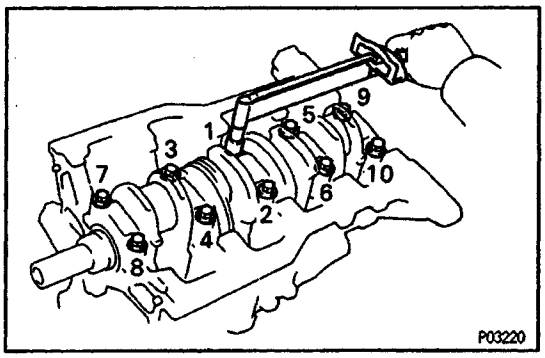

(c) Apply a light coat of engine oil on the threads and under the heads of the main bearing cap bolts.

(d) Install and uniformly tighten the ten bolts of the main bearing cap bolts in several passes, in the sequence shown.

Torque: 59 N–m (600 kgf–cm, 43 ft–lbf)

(e) Check that the crankshaft turns smoothly.

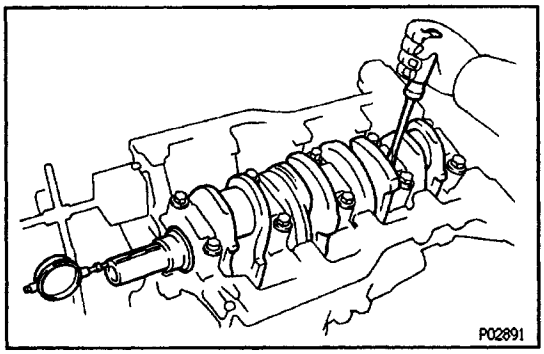

(f) Check the crankshaft thrust clearance.
Using a dial indicator, measure the thrust clearance while prying the crankshaft back an forth with a screwdriver.

Standard thrust clearance:
0.020 – 0.220 mm (0.0008 – 0.0087 in.)

Maximum thrust clearance:
0.30 mm (0.0118 In.)

If the thrust clearance is greater than maximum, replace the thrust washers as a set.

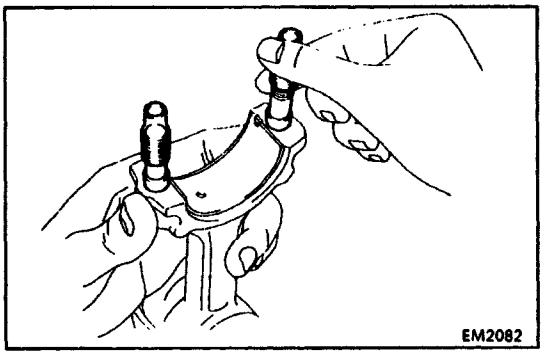

5. INSTALL PISTON AND CONNECTING ROD ASSEMBLES

(a) Cover the connecting rod bolts with a short piece of hose to protect the crankshaft from damage.

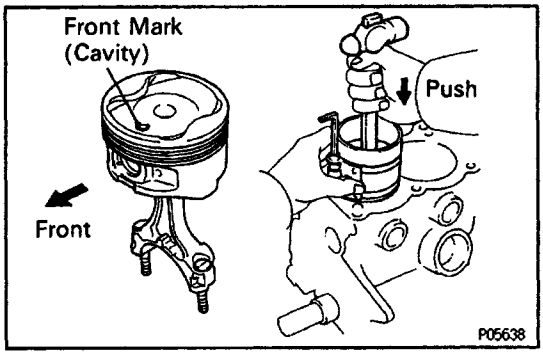

(b) Using a piston ring compressor, push the correctly numbered piston and connecting rod assemblies into each cylinder with the front mark of the piston facing forward.

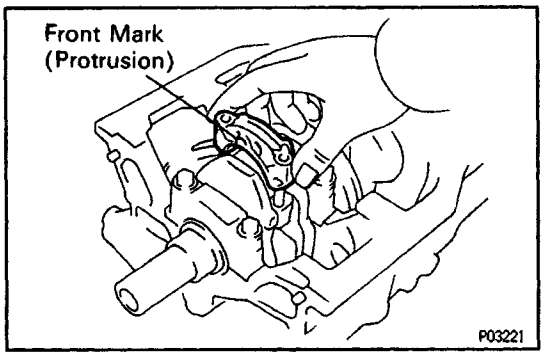

6. INSTALL CONNECTING ROD CAPS

A. Place connecting rod cap on connecting rod

(a) Match the numbered connecting rod cap with the connecting rod.

(b) Install the connecting rod cap with the front mark facing forward.

B. Install connecting rod cap nuts

HINT:

- The cap nuts are tightened in two progressive steps (steps (b) and (d)).
- If any one of the connecting rod bolts is broken or deformed, replace it.

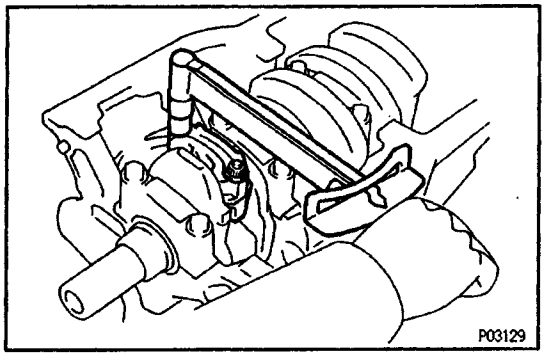

(a) Apply a light of engine oil on the threads and under the nuts of the connecting rod cap.
(b) Using SST, install and alternately tighten the cap nuts in several passes.
SST 09011–38121
Torque: 25 N–m (250 kgf–cm, 18 ft–lbf)
If any one of the cap nuts does not meet the torque specification, replace the connecting rod bolt and cap nut as a set.

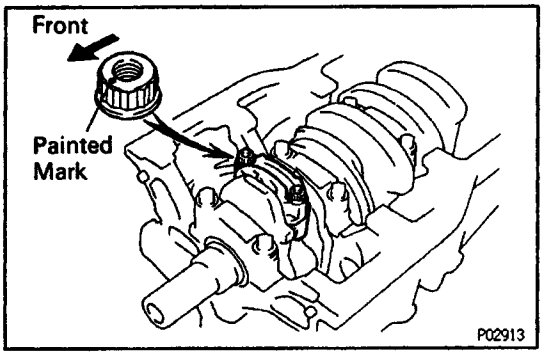

(c) Mark the front of the cap nut with the paint.

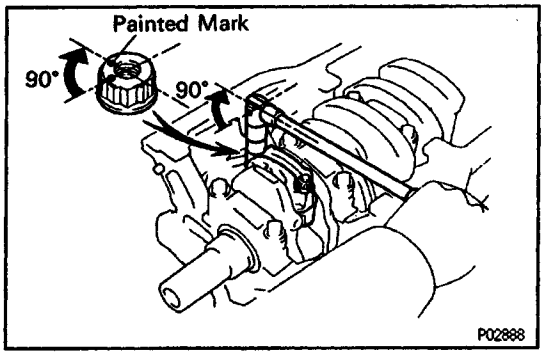

(d) Retighten the cap nuts 90° as shown.
(e) Check that the painted mark is now at a 90° angle to the front.
(f) Check that the crankshaft turns smoothly.

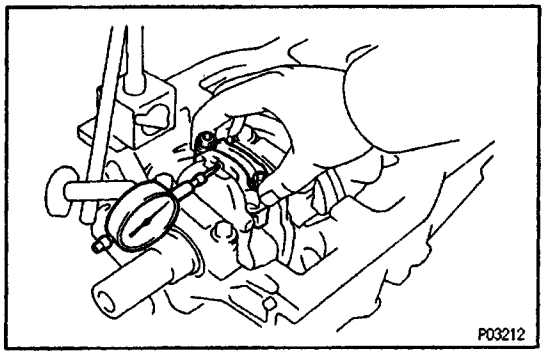

(g) Check the connecting rod thrust clearance.
- Using a dial indicator, measure the thrust clearance while moving the connecting rod back an forth.

Standard thrust clearance:
0.160 – 0.312 mm (0.0063 – 0.0123 in.)
Maximum thrust clearance:
0.35 mm (0.0138 in.)
If the thrust clearance is greater than maximum, replace the connecting rod assembly. If necessary, replace the crankshaft.

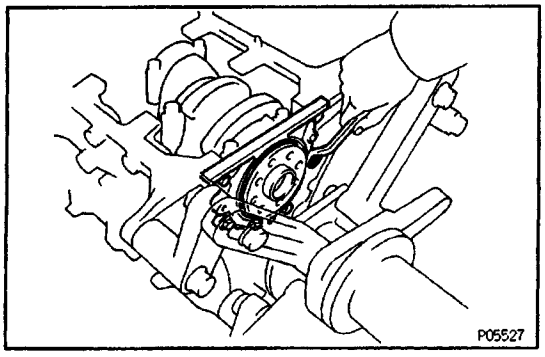

7. INSTALL REAR OIL SEAL RETAINER
Install a new gasket and the retainer with the six bolts.
Torque: 9.3 N–m (95 kgf–cm, 82 in.–lbf)

EG11P–01

POST ASSEMBLY

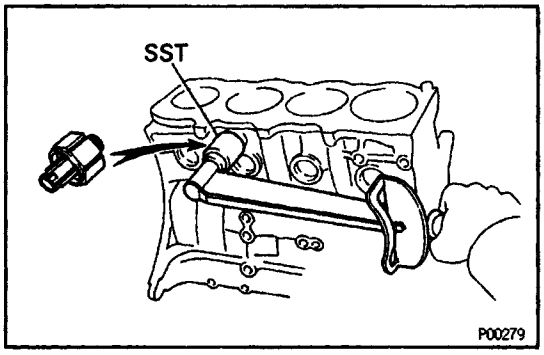

1. INSTALL KNOCK SENSOR

Using SST, install the knock sensor.

SST 09816–30010

Torque: 37 N–m (380 kgf–cm, 27 ft–lbf)

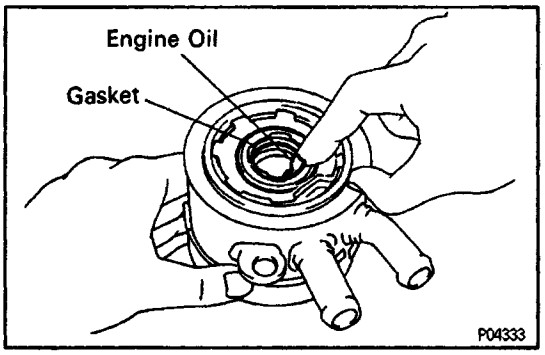

2. INSTALL OIL COOLER

(a) Install new O–ring and gasket to the oil cooler.

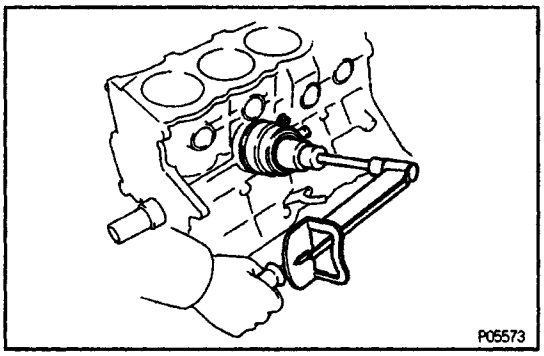

(b) Apply a light coat of engine oil on the threads and under the head of the relief valve.

(c) Temporarily install the oil cooler with the nut.

(d) Install the plate washer and relief valve.

Torque: 78 N–m (800 kgf–cm, 58 ft–lbf)

(e) Tighten the nut.

Torque: 7.8 N–m (80 kgf–cm, 69 in.–lbf)

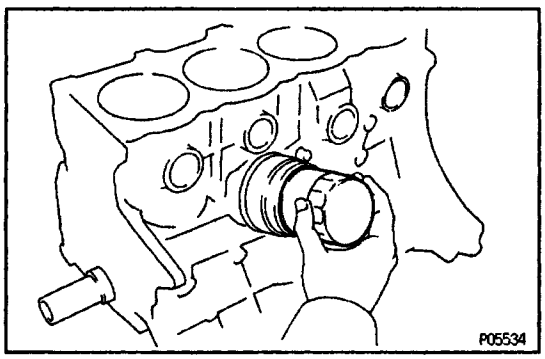

(f) Install the oil filter.

(See Replacement of Oil and Oil Filter)

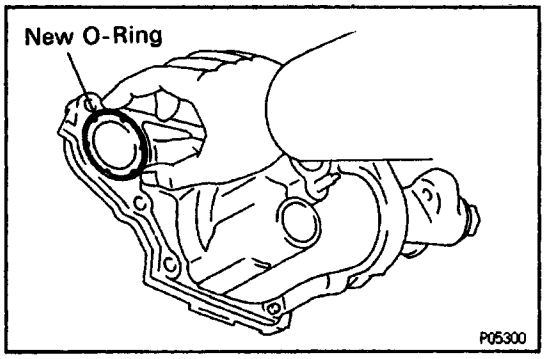

3. INSTALL WATER PUMP AND WATER PUMP COVER ASSEMBLY

(a) Install a new O–ring to the water pump cover.

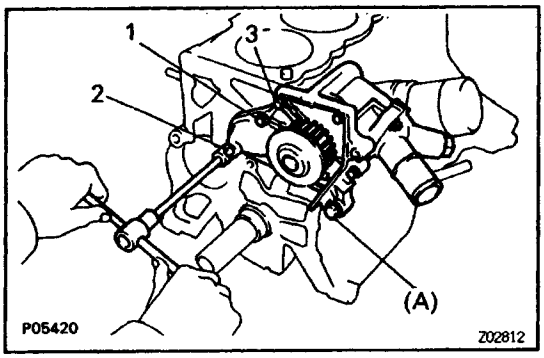

(b) Install the water pump with the three bolts. Tighten the bolts in the sequence shown.
Torque: 7.8 N–m (80 kgf–cm, 69 in–lbf)
(c) (w/o A/C)
Install the bolt (A).
Torque: 27 N–m (275 kgf–cm. 20 ft–lbf)

4. INSTALL OIL PUMP AND AND OIL PAN
(See Oil pump Installation)
5. INSTALL CYLINDER HEAD
(See Cylinder Head Installation)
6. INSTALL TIMING BELT AND PULLEYS
(See Timing Belt Installation)

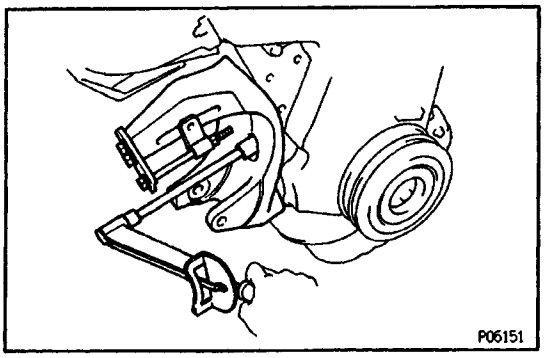

7. INSTALL ALTERNATOR BRACKET
Install the alternator bracket with the three bolts and two nuts.
Torque: 43 N–m (440 kgf–cm, 32 ft–lbf)

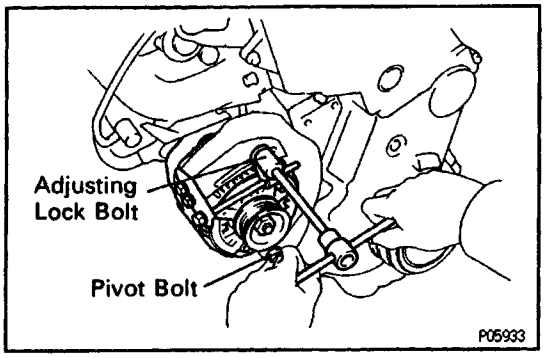

8. INSTALL ALTERNATOR
(a) Mount the alternator on the alternator bracket with the pivot bolt and adjusting lock bolt. Do not tighten the bolts yet.

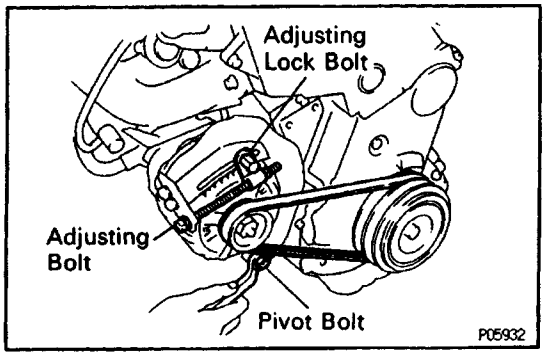

(b) Install the drive belt with the adjusting bolt.
(c) Adjust the drive belt with the adjusting bolt.

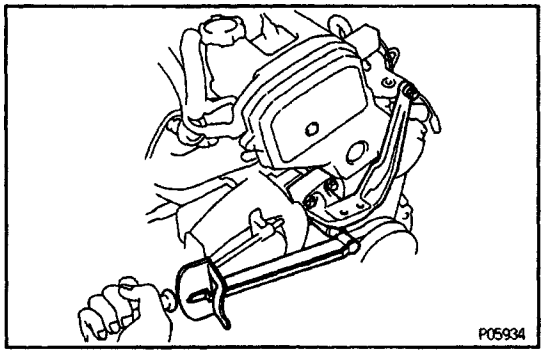

9. INSTALL RH ENGINE MOUNTING BRACKET

Install the mounting bracket with the four bolts.

Torque: 61 N–m (620 kgf–cm, 45 ft–lbf)

10. DISCONNECT ENGINE FROM ENGINE STAND

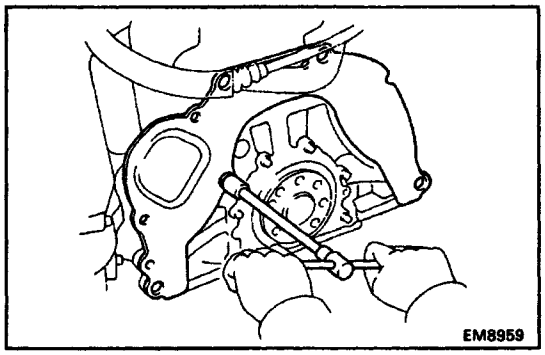

11. INSTALL REAR END PLATE

Install the rear end plate with the bolt.

Torque: 9.3 N–m (95 kgf–cm, 82in–lbf)

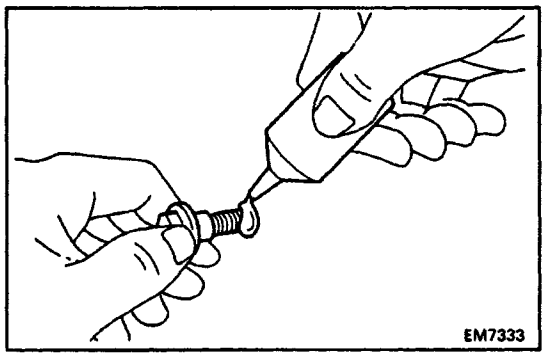

12. (M/T)

INSTALL FLYWHEEL

(a) Apply adhesive to two or three threads of the mou–nting bolt end.

Adhesive:

Part No. 08833–00070, THREE BOND 1324 or equivalent

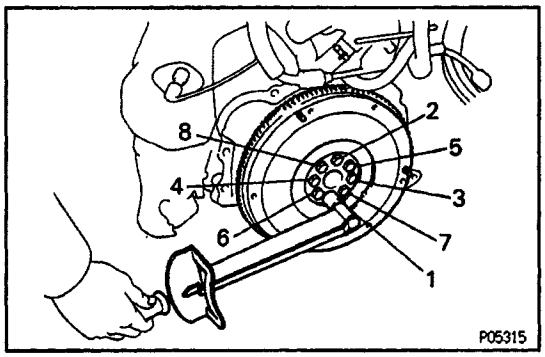

(b) Install the flywheel on the crankshaft.

(c) Install and uniformly tighten the mounting bolts in several passes, in the sequence shown.

Torque: 88 N–m (900 kgf–cm, 65 ft–lbf)

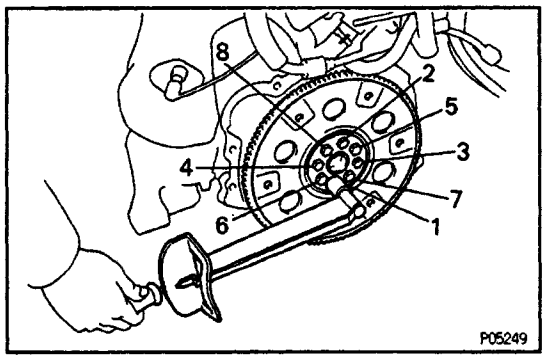

13. (A/T)

INSTALL DRIVE PLATE (See procedure in step 12)

Torque: 83 N–m (850 kgf–cm, 61 ft–lbf)

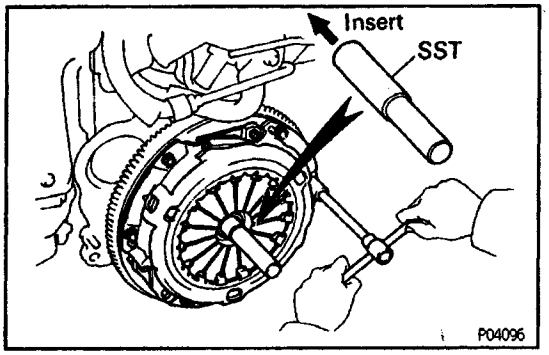

1. INSTALL CLUTCH DISC AND COVER

Using SST, install the disc and cover with the six bolts.
Uniformly tighten the bolts in several passes.
SST 09301–32010
Torque: 19 N–m (195 kgf–cm, 14 ft–lbf)

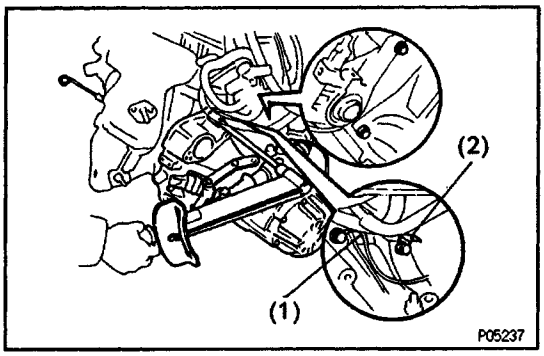

2. INSTALL TRANSAXLE TO ENGINE

(a) Attach the transaxle to the engine.
(b) Install the five bolts together with the following parts
(1) Ground strap
(2) Engine wire bracket
Torque:
46 N–m (470 kgf–cm, 34 ft–lbf) for 14 mm head
64 N–m (650 kgf–cm, 47 ft–lbf) for 17 mm head

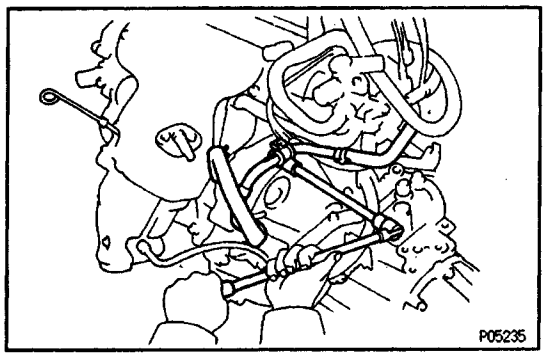

3. INSTALL HEATER WATER PIPE

(a) Install the water pipe with the two bolts.
(b) Connect the water hose to the water by–pass pipe.
Torque: 46 N–m (470 kgf–cm, 34 ft–lbf)

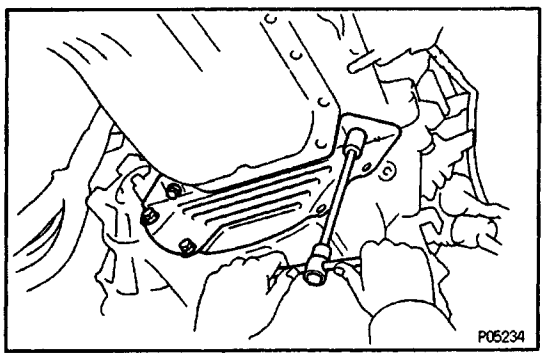

4. INSTALL NO.2 REAR END PLATE

Install the rear end plate with the four bolts.
Torque:
9.3 N–m (95 kgf–cm, 82 in.–lbf) for 10 mm head
19 N–m (195 kgf–cm, 14 ft–lbf) for 12 mm head

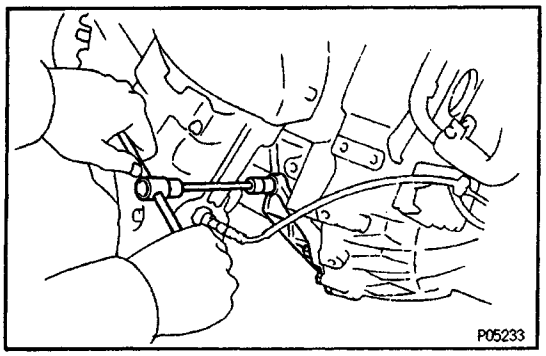

5. INSTALL STIFFENER PLATE

Install the stiffener plate with the three bolts.
Torque: 37N–m (380 kgf–cm, 27 ft–lbf)

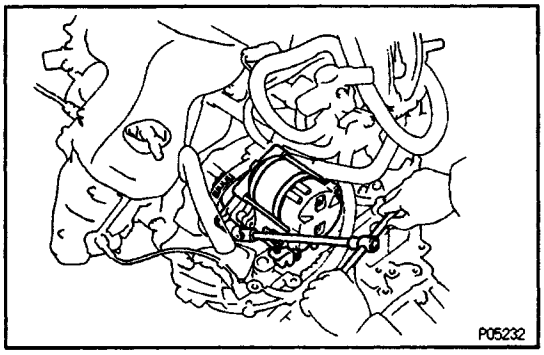

6. INSTALL STARTER

Install the starter with the two bolts.

Torque: 39 N–m (400 kgf–cm, 29 ft–lbf)

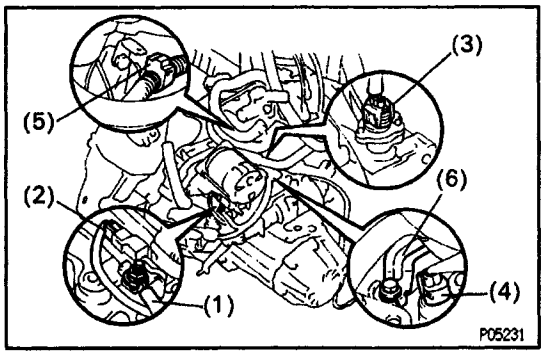

7. CONNECT ENGINE WIRE

(a) Connect the following parts:
- (1) Starter wire
- (2) Starter connector
- (3) Vehicle speed pulse generator connector
- (4) Back–up light switch connector
- (5) Engine wire clamp
- (6) Engine wire bracket

(b) Install the terminal cover to the starter.

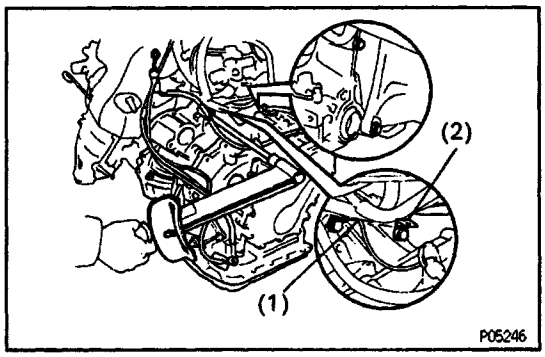

ENGINE & TRANSAXLE ASSEMBLY (A/T)

(See Components for Engine & Transaxle Separation and Assembly (A/T)

1. INSTALL TRANSAXLE TO ENGINE

A. Install transaxle

(a) Attach the transaxle to the engine.

(b) Install the five bolts together with the following parts
- (1) Ground strap
- (2) Engine wire bracket

Torque:

46 N–m (470 kgf–cm, 34 ft–lbf) for 14 mm head
64 N–m (650 kgf–cm, 47 ft–lbf) for 17 mm head

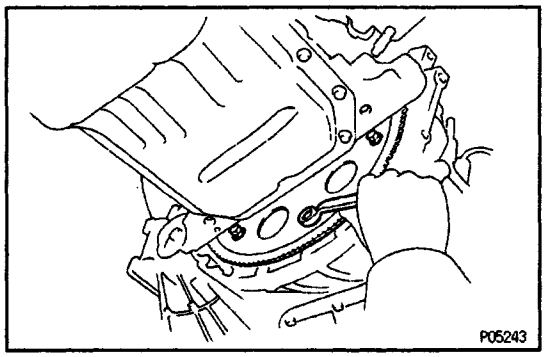

B. Install torque converter mounting bolts

(a) Apply adhesive to two or three threads of the mou–nting bolt end.

Adhesive:

Part No. 08833–00070, THREE BOND 1324 or equivalent

(b) Hold the crankshaft pulley bolt with a wrench, and install the six bolts evenly.

Torque: 27 N–m (280 kgf–cm, 20 ft–lbf)

HINT: First install the dark green colored bolt, install the other bolts.

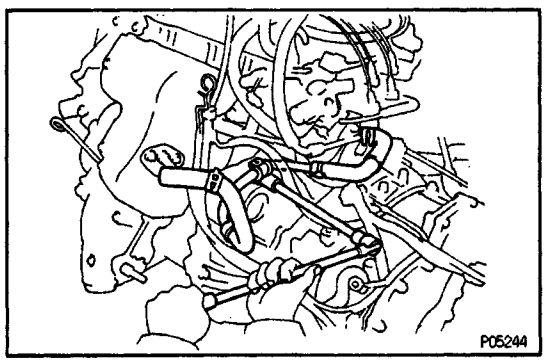

2. INSTALL HEATER WATER PIPE

(a) Install the water pipe with the two bolts.

(b) Connect the water hose to the water by–pass pipe.

Torque: 46 N–m (470 kgf–cm, 34 ft–lbf)

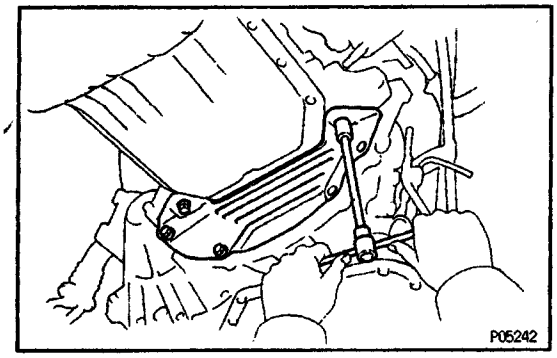

3. INSTALL No.2 REAR END PLATE

Install the rear end plate with the four bolts.

Torque:

9.3 N–m (95 kgf–cm, 82 in–lbf) for 10 mm head

19 N–m (195 kgf–cm, 14 ft–lbf) for 12 mm head

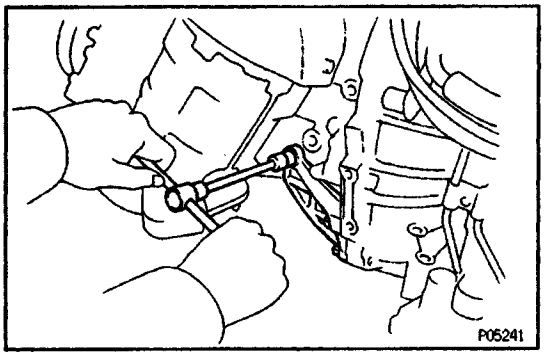

4. INSTALL STIFFENER PLATE

Install the stiffener plate with the three bolts.

Torque: 37 N–m (380 kgf–cm. 27 ft–lbf)

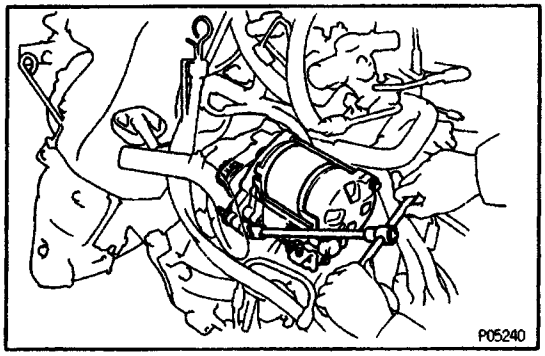

5. INSTALL STARTER

Install the starter with the two bolts.

Torque: 39 N–m (400 kgf–cm, 29 ft–lbf)

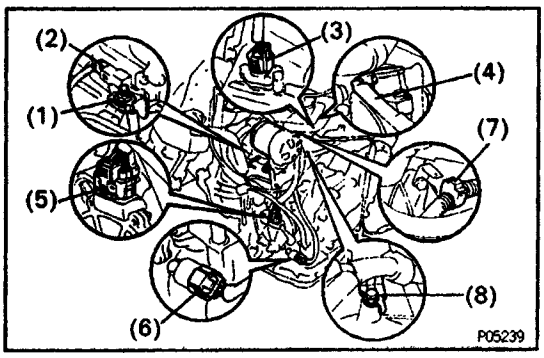

6. CONNECT ENGINE WIRE

(a) Connect the following parts:

(1) Starter wire
(2) Starter connector
(3) No.1 vehicle speed pulse generator
(4) No.2 vehicle speed pulse generator
(5) Park/neutral switch connector
(6) Solenoid connector
(7) Engine wire clamp
(8) Engine wire bracket

(b) Install the terminal cover to the starter.

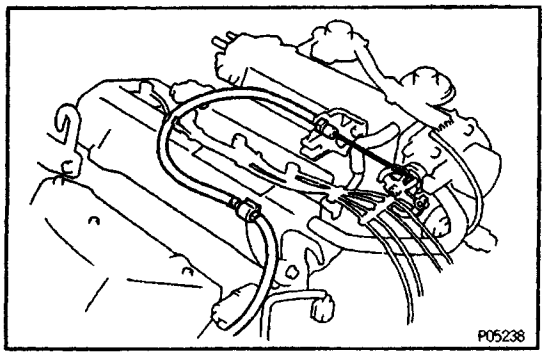

7. CONNECT THROTTLE CABLE FROM THROTTLE BODY

EG118–01

ENGINE INSTALLATION

(See Components for Engine Removal and Installation)

1. INSTALL LH ENGINE MOUNTING BRACKET TO TRANSAXLE

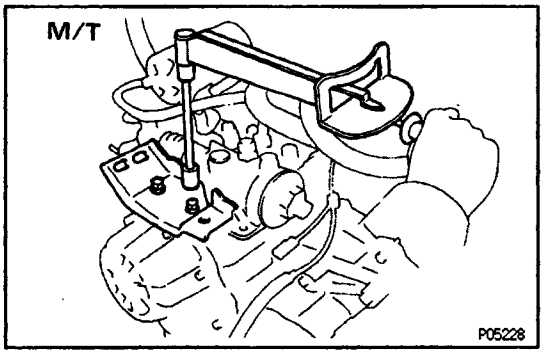

(M/T)

install the mounting bracket with the three bolts.

Torque 52 N–m (530 kgf–cm, 38 ft–lbf)

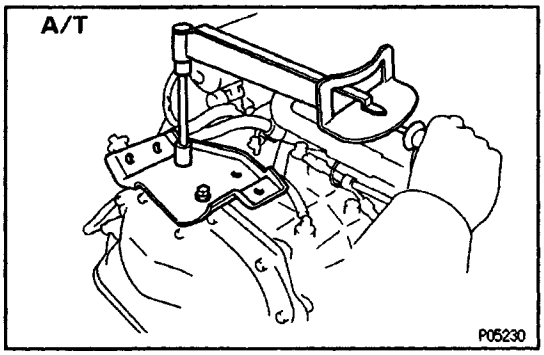

(A/T)

Install the mounting bracket with the two bolts.

Torque: 52 N–m (530 kgf–cm, 38 ft–lbf)

2. INSTALL ENGINE AND TRANSAXLE ASSEMBLY IN VEHICLE

(a) Attach the engine chain hoist to engine hangers.

(b) Slowly lower the engine into the engine compartment. Tilt the transaxle downward, lower the engine and clear the LH body mounting.

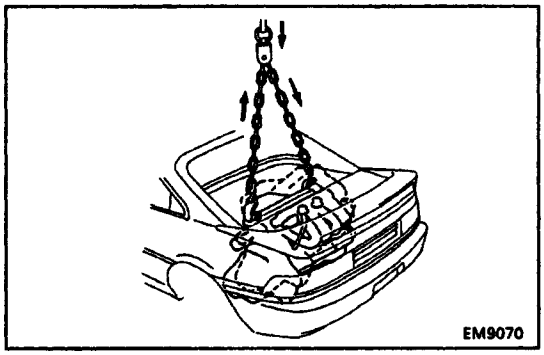

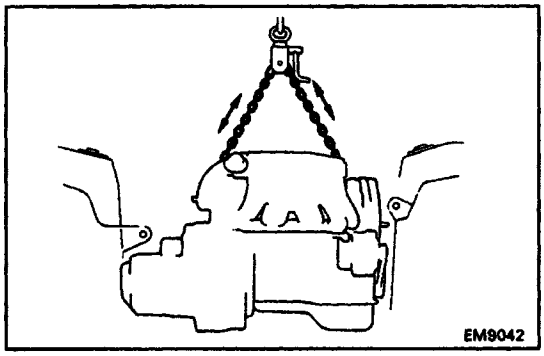

(c) Keep the engine level, and align RH and LH mountings with the body mountings.

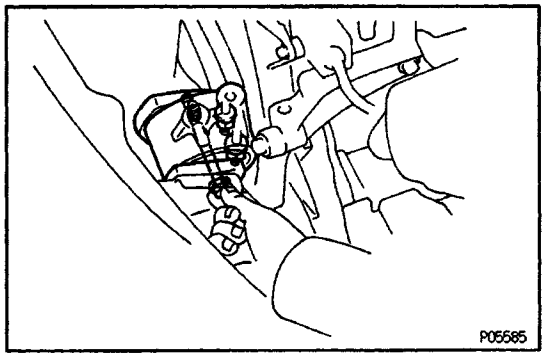

(d) Attach the RH mounting insulator to the body, and temporarily install the through bolt.

(e) Attach the RH mounting insulator to the mounting bracket, and temporarily the two nuts.

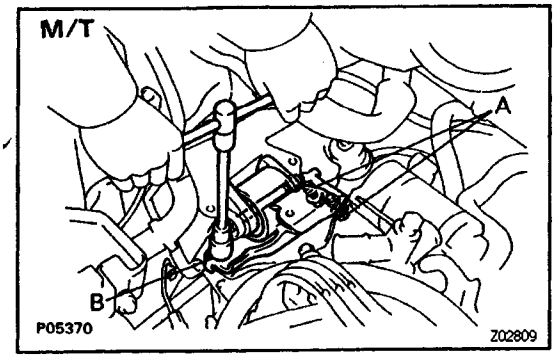

(f) Attach the LH mounting insulator to the body, and temporarily install the through bolt.

(g) (M/T)

Attach the LH mounting insulator to the mounting bracket, and install the three bolts.

Torque:

63 N–m (650 kgf–cm, 47 ft–lbf) for A
73 N–m (740 kgf–cm, 54 ft–lbf) for B

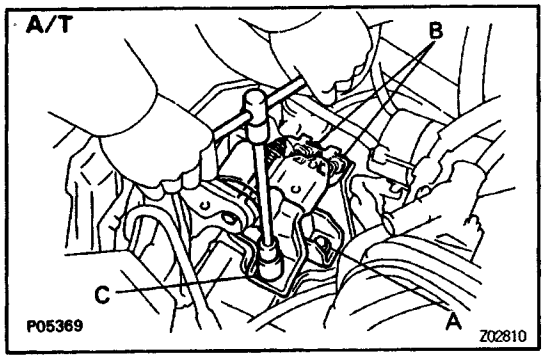

(h) (A/T)

Attach the LH mounting insulator to the mounting bracket, and install the four bolts.

Torque:

52 N–m (530 kgf–cm, 38 ft–lbf) for A
63 N–m (650 kgf–cm, 47 ft–lbf) for B
73 N–m (740 kgf–cm, 54 ft–lbf) for C

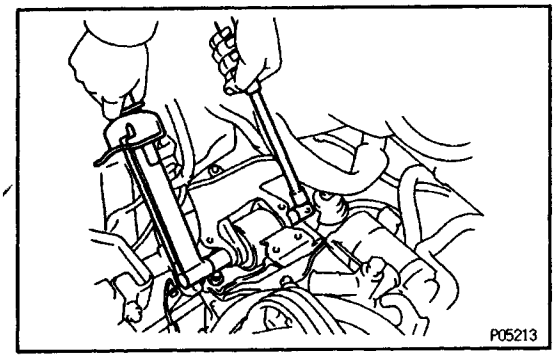

(i) Tighten the through bolt holding the LH mounting insulator to the body.

Torque: 78 N–m (800 kgf–cm, 58 ft–lbf)

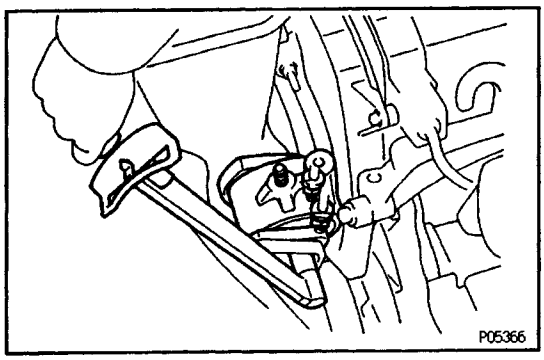

(j) Tighten the two nuts holding the RH mounting insu–lator to the mounting bracket.

Torque: 52 N–m (530 kgf–cm, 38 ft–lbf)

(k) Tighten the through bolt holding the RH mounting insulator to the body.

Torque: 78 N–m (800 kgf–cm, 58 ft–lbf)

(l) Remove the engine chain hoist from the engine.

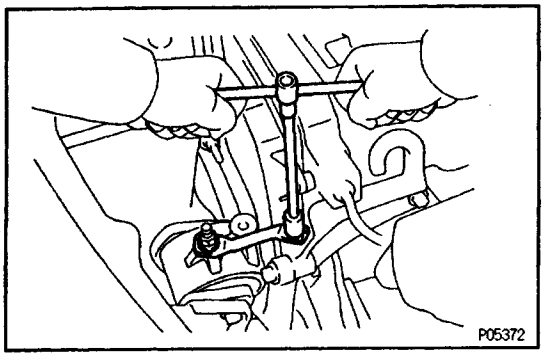

3. INSTALL RH ENGINE MOUNTING STAY

Install the mounting stay with the bolt and nut.

Torque: 73 N–m (740 kgf–cm, 54 ft–lbf)

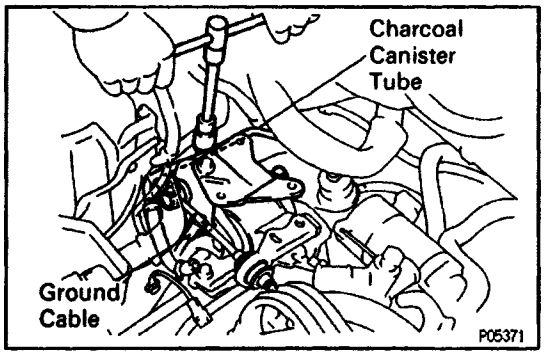

4. INSTALL LATERAL CONTROL ROD TO BODY

Install the control rod and charcoal canister tube with the four bolts. Connect the ground cable.

Torque: 35 N–m (360 kgf–cm, 26 ft–lbf)

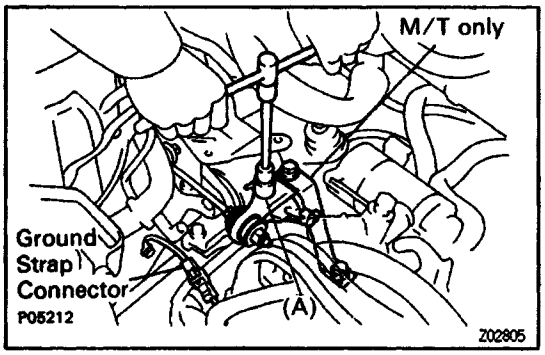

5. INSTALL LATERAL CONTROL ROD (TO LH ENGINE MOUNTING INSULATOR) AND LH ENGINE MOUNTING STAY (M/T only)

(M/T)

(a) Temporarily install the lateral control rod Temporarily install the lateral control rod with bolt (A).

(b) install the LH mounting stay with the two bolts.

Torque:

25 N–m (250 kgf–cm, 18 ft–lbf) for transaxle side

73 N–m (740 kgf–cm, 54 ft–lbf) for insulator side

(c) Tighten the bolt (A).

Torque: 37 N–m (380 kgf–cm, 27 ft–lbf)

(A/T)

Install the lateral control rod with two bolts.

Torque: 37 N–m (380 kgf–cm, 27 ft–lbf)

6. CONNECT GROUND STRAP CONNECTOR

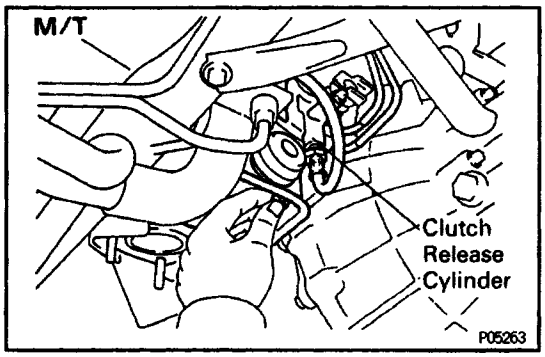

7. INSTALL FRONT ENGINE MOUNTING BRACKET

(M/T)

(a) Temporarily install the clutch release cylinder and mounting bracket with the two bolts.

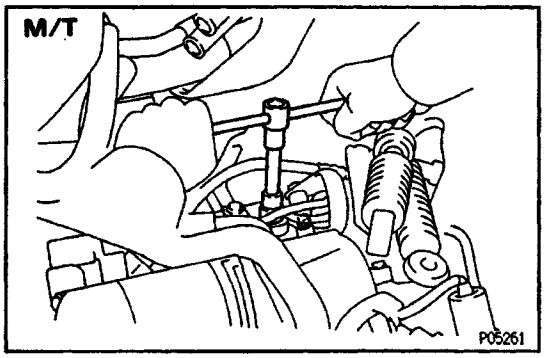

(b) Tighten the two bolts holding the clutch release cyl–inder to the transaxle.

Torque: 12 N–m (120 kgf–cm. 9 ft–lbf)

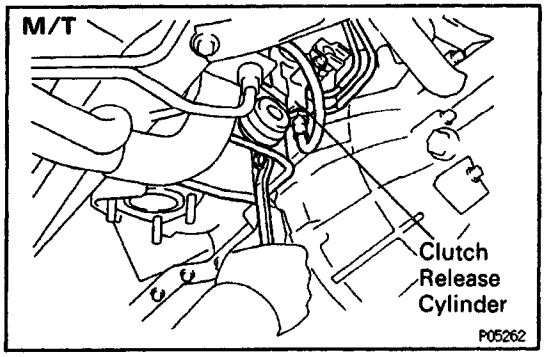

(c) Tighten the two bolts holding the mounting bracket to to the transaxle.
Torque: 77 N–m (790 kgf–cm. 57 ft–lbf)

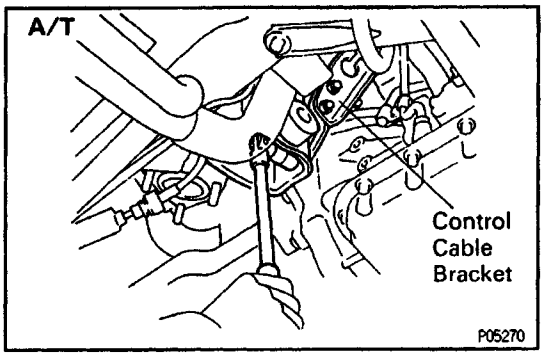

(A/T)
Install the control cable bracket and mounting bracket with the two bolts.
Torque: 77 N–m (790 kgf–cm. 57 ft–lbf)

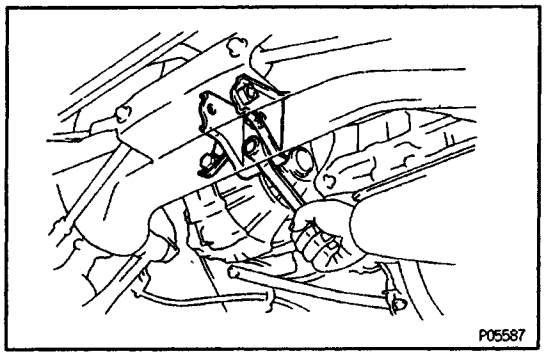

8. INSTALL REAR ENGINE MOUNTING BRACKET
Install the mounting bracket with the three bolts.
Torque: 77 N–m (790 kgf–cm, 57 ft–lbf)

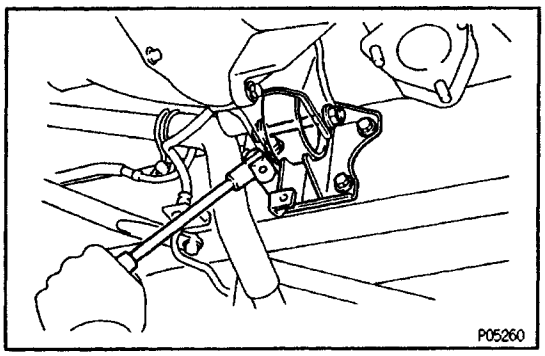

9. INSTALL FRONT ENGINE MOUNTING INSULATOR
(a) Install the mounting insulator to the body with the four bolts.
Torque: 73 N–m (740 kgf–cm, 54 ft–lbf)
(b) Temporarily install the through bolt and nut holding the mounting insulator to the mounting bracket.

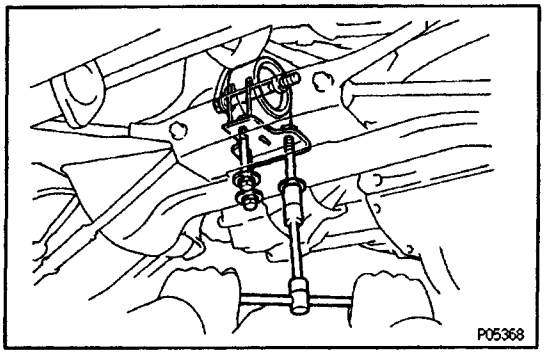

10. INSTALL REAR ENGINE MOUNTING INSULATOR
(a) Temporarily install the mounting bracket to the body with the three bolts.
(b) Temporarily install the through bolt holding the mou–nting insulator to the mounting bracket.
(c) Tighten the three bolts holding the mounting bracket to the body.
Torque: 64 N–m (650 kgf–cm, 47 ft–lbf)

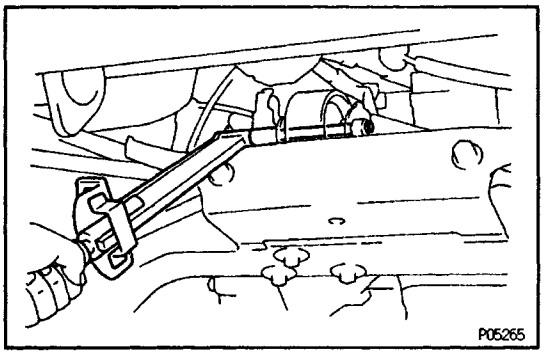

(d) Tighten the through bolt holding the mounting insu–lator to the mounting bracket.
Torque: 87 N–m (890 kgf–cm, 64 ft–lbf)

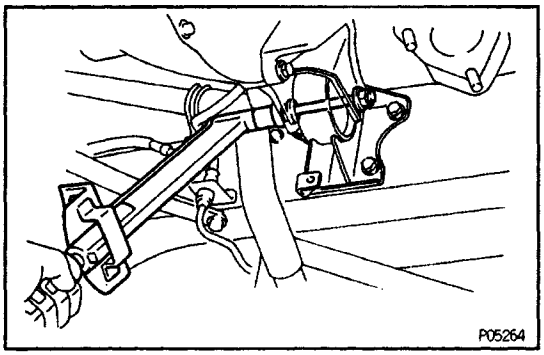

11. TIGHTEN FRONT ENGINE MOUNTING THROUGH BOLT
Torque: 96 N–m (980 kgf–cm, 70 ft–lbf)

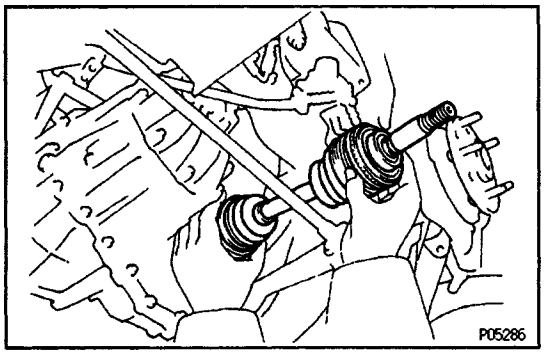

12. INSTALL DRIVE SHAFTS
(See Drive Shaft Installation in SA section)

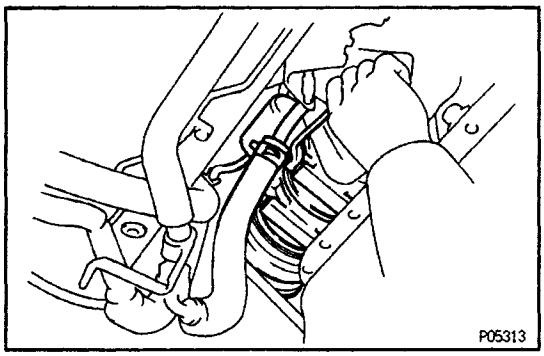

13. INSTALL A/C COMPRESSOR
(a) Temporarily install the A/C compressor with the two bolts

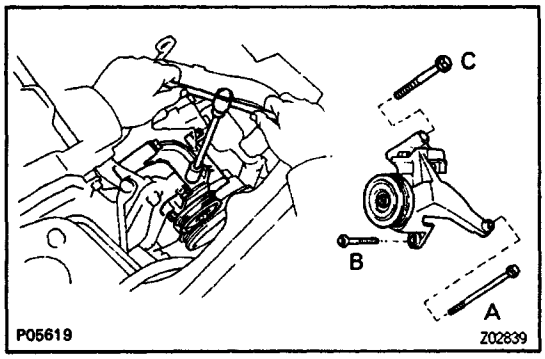

(b) Install the idler pulley bracket with the three bolts.
Torque:
25 N–m (250 kgf–cm, 18 ft–lbf) for A
27 N–m (275 kgf–cm, 20 ft–lbf) for B
37 N–m (375 kgf–cm, 27 ft–lbf) for C
(c) Connect the A/C compressor connector.

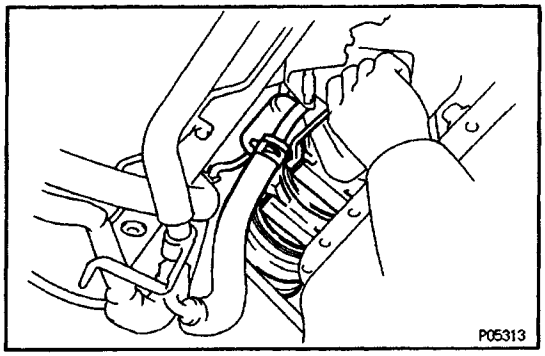

(d) Tighten the two bolts of the lower side of the A/C compressor.
Torque: 25 N–m (250 kgf–cm, 18 ft–lbf)

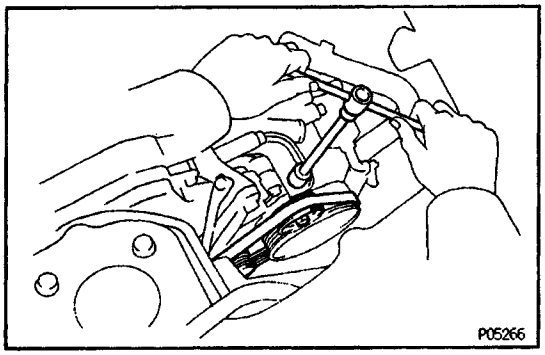

(e) Install the drive belt with the adjusting bolt.
(f) Tighten the idler pulley nut.

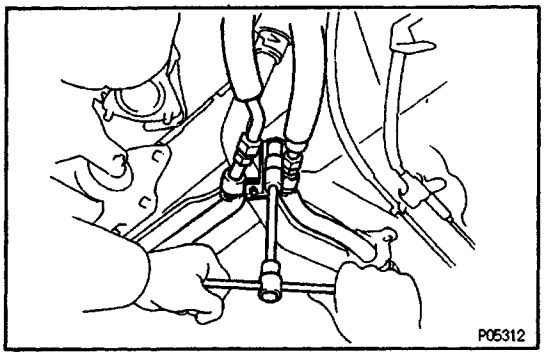

(g) Install the A/C pipes with the two clamps and nut.

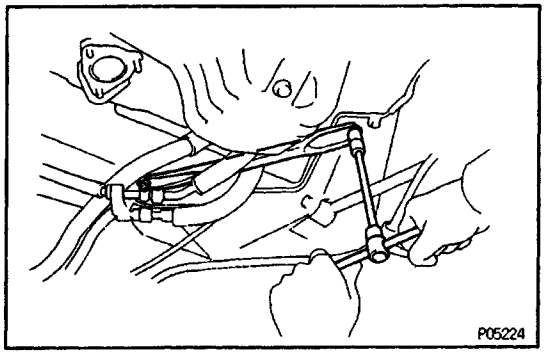

(h) Install the lower suspension brace with the two bolts.
Torque: 73 N–m (740 kgf–cm, 54 ft–lbf)

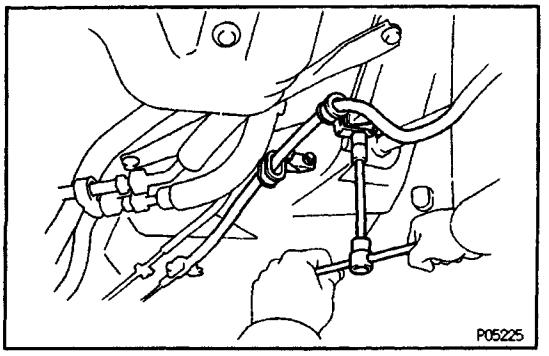

(i) Install the parking brake cable with the two clamps and three bolts.

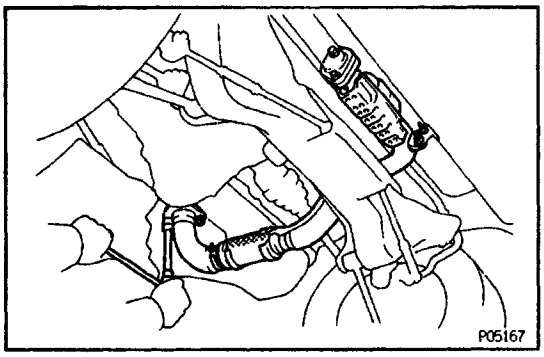

14. INSTALL FRONT EXHAUST PIPE

(a) Place two new gaskets to the front and rear of the front exhaust pipe.

(b) Using a 14 mm deep socket wrench, install the front exhaust pipe with three new nuts.

Torque: 62 N–m (630 kgf–cm, 46 ft–lbf)

(c) Install the two bolts holding the front exhaust pipe to the tailpipe.

Torque: 43 N–m (440 kgf–cm, 32 ft–lbf)

(d) Install the two bolts holding the front exhaust pipe bracket to the tailpipe bracket.

Torque: 19 N–m (190 kgf–cm, 14 ft–lbf)

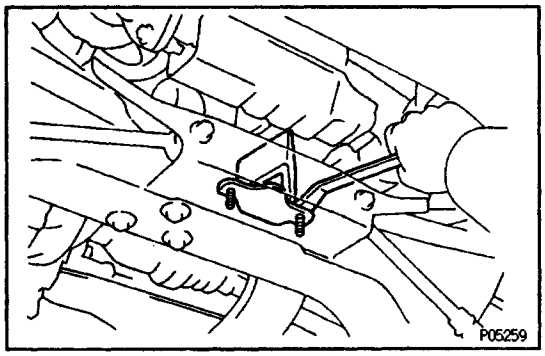

(e) Install the damper with the two bolts.

Torque: 21 N–m (210 kgf–cm, 15 ft–lbf)

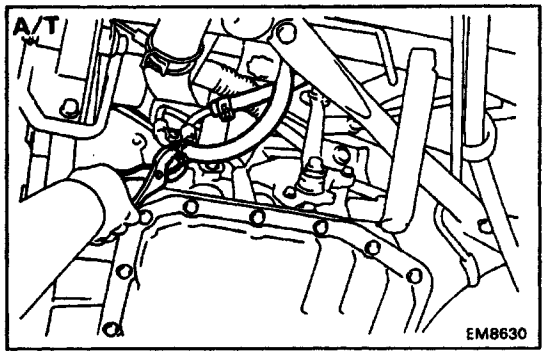

15. (A/T)

CONNECT TRANSAXLE OIL COOLER HOSES

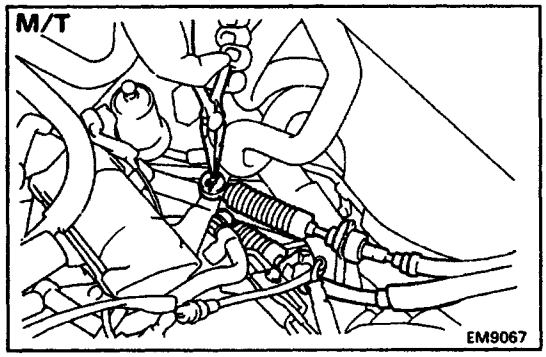

16. CONNECT TRANSAXLE CONTROL CABLE(S)

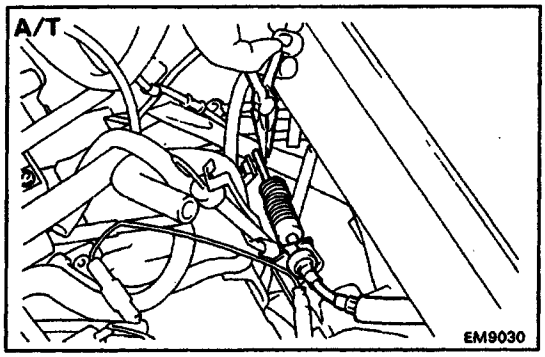

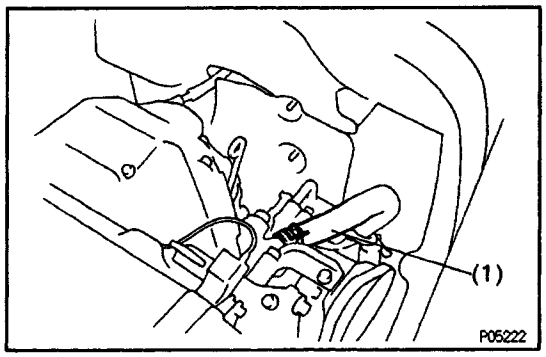

17. CONNECT HOSES

Connect the following connectors:

(1) Radiator hose to water inlet

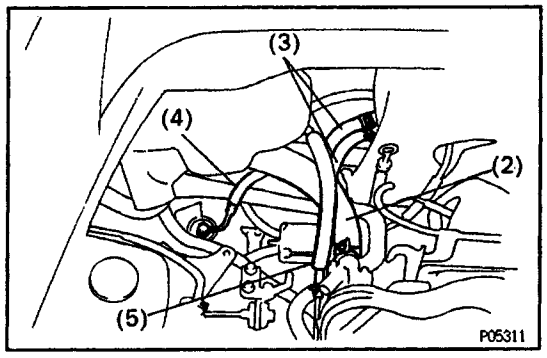

(2) Radiator hose to water outlet
(3) Two heater water hoses
(4) Fuel inlet hose to fuel filter
(5) Fuel return hose

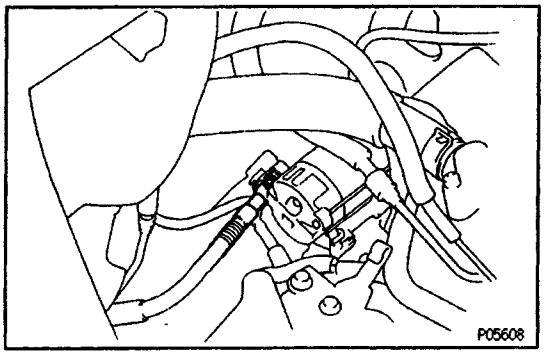

18. CONNECT STARTER CABLE

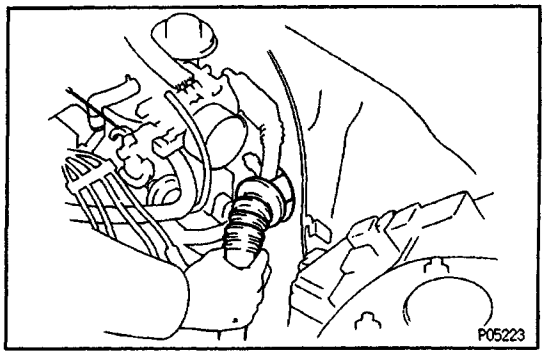

19. CONNECT ENGINE WIRE TO LUGGAGE COMPARTMENT

(a) Push in the engine wire through the luggage com–partment.

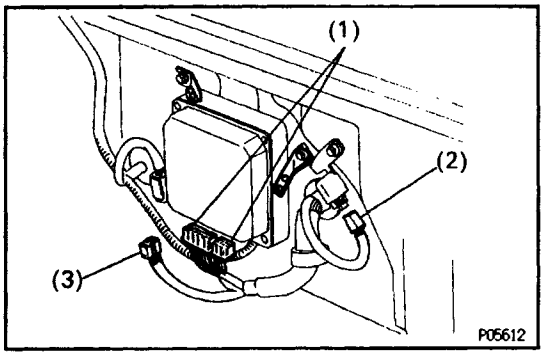

(b) Connect the following connectors:
(1) Two PCME (& T) connectors
(2) Starter relay connector
(3) Engine compartment wire connector

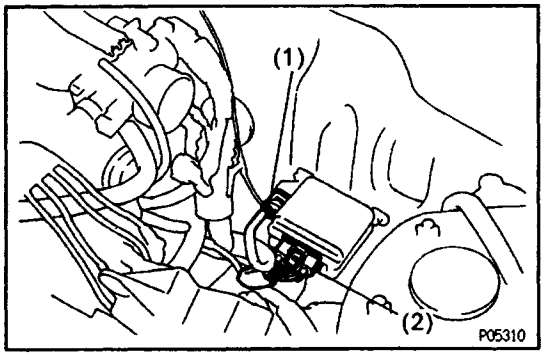

20. CONNECT CONNECTORS

Connect the following connectors:
(1) Noise filter connector
(2) Igniter connector

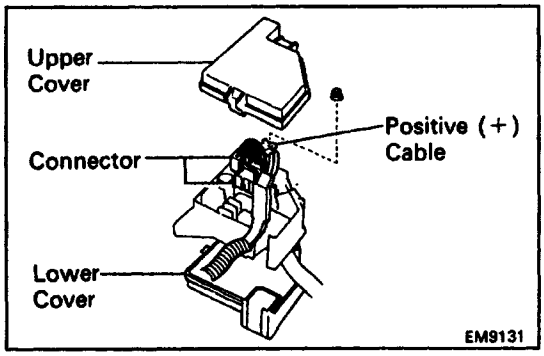

21. CONNECT ENGINE WIRE, AND INSTALL ENGINE RELAY BOX

(a) Connect the two connectors and positive (+) cable of the engine wire to relay box.
(b) Install the upper and lower covers to the relay box.

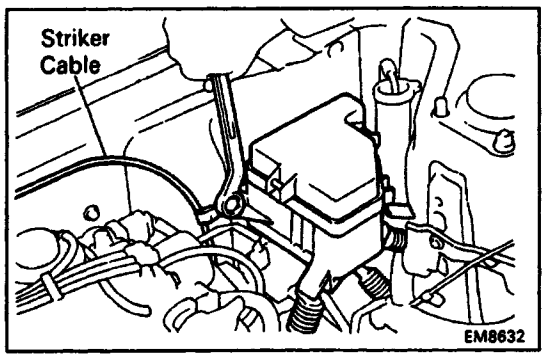

(c) Install the relay box with the two bolts. Install the luggage compartment striker cable.

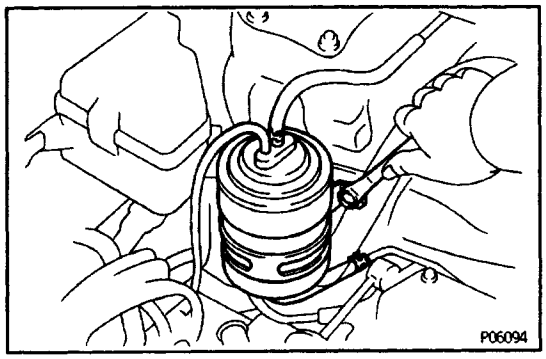

22. INSTALL CHARCOAL CANISTER

(a) Install the charcoal with the two bolts.
(b) Connect the three hoses.

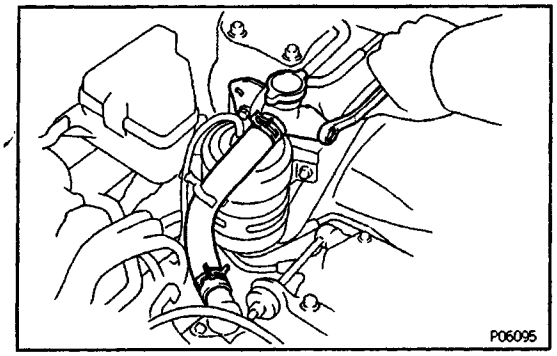

23. INSTALL WATER FILTER

(a) Install the water filler with the two bolts.
(b) Connect the following hoses:
(1) Water filler hose
(2) Coolant reservoir hose

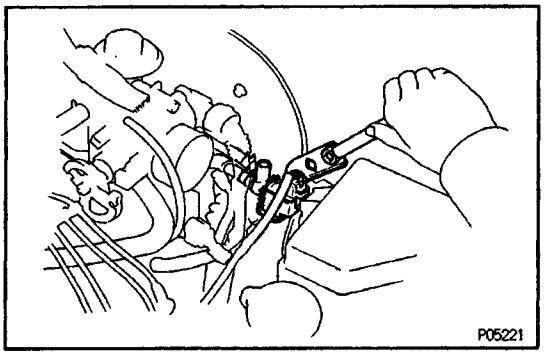

24. INSTALL A/C IDLE–UP VALVE

Install theC idle–up valve with the bolt.

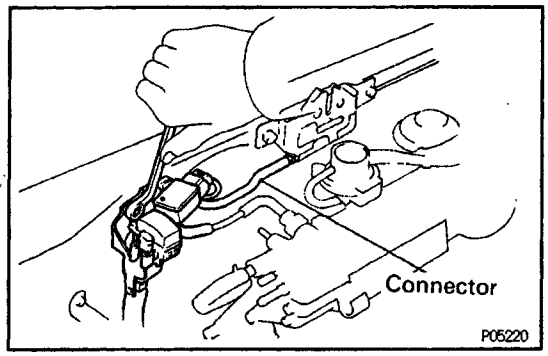

25. INSTALL DATA LINK CONNECTOR 1 AND MAP

(a) Install the data link connector 1 and MAP to the body with the bolt.
(b) Connect the engine hood curtesy switch connector.

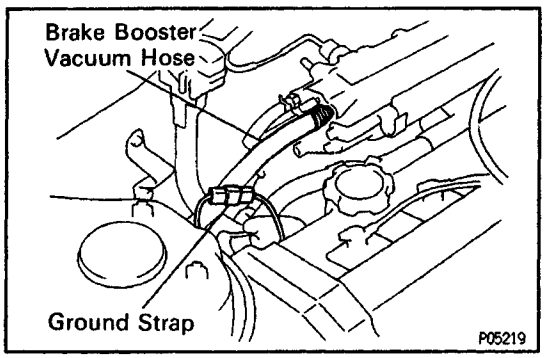

26. CONNECT BRAKE BOOSTER VACUUM HOSE
27. CONNECT GROUND STRAP CONNECTOR

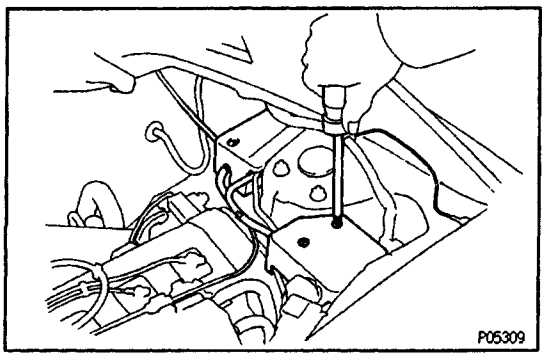

28. (w/ CRUISE CONTROL SYSTEM)
INSTALL CRUISE CONTROL ACTUATOR AND ACCELERATOR LINKAGE
29. CONNECT ACCELERATOR LINKAGE TO THROTTLE BODY

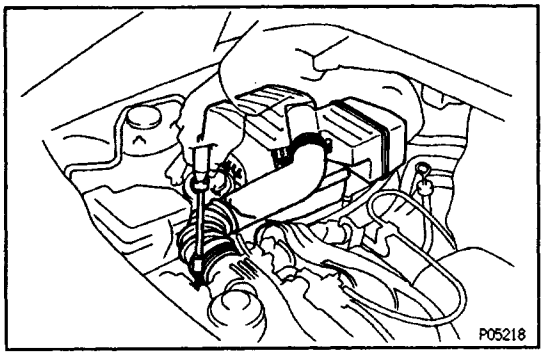

30. INSTALL AIR CLEANER HOUSING

(a) Install the air cleaner case with the three bolts.
(b) Install the air filter.
(c) Install the air cleaner cap with the four clamps.
(d) Connect the air cleaner hose to the throttle body.
(e) Connect the IATS connector.

31. CONNECT CABLE TO NEGATIVE TERMINAL OF BATTERY

32. FILL WITH ENGINE COOLANT

33. FILL WITH ENGINE OIL

34. START ENGINE AND CHECK FOR LEAKS

35. PERFORM ENGINE ADJUSTMENT
(See Tune–Up)

36. INSTALL ENGINE UNDER COVERS

37. INSTALL ENGINE HOOD

38. INSTALL ENGINE HOOD SIDE PANELS

39. PERFORM ROAD TEST

Check for abnormal noise, shock slippage, correct shift points and smooth operation.

40. RECHECK ENGINE COOLANT AND OIL LEVELS

CYLINDER HEAD

EG11A–01

COMPONENTS FOR REMOVAL AND INSTALLATION

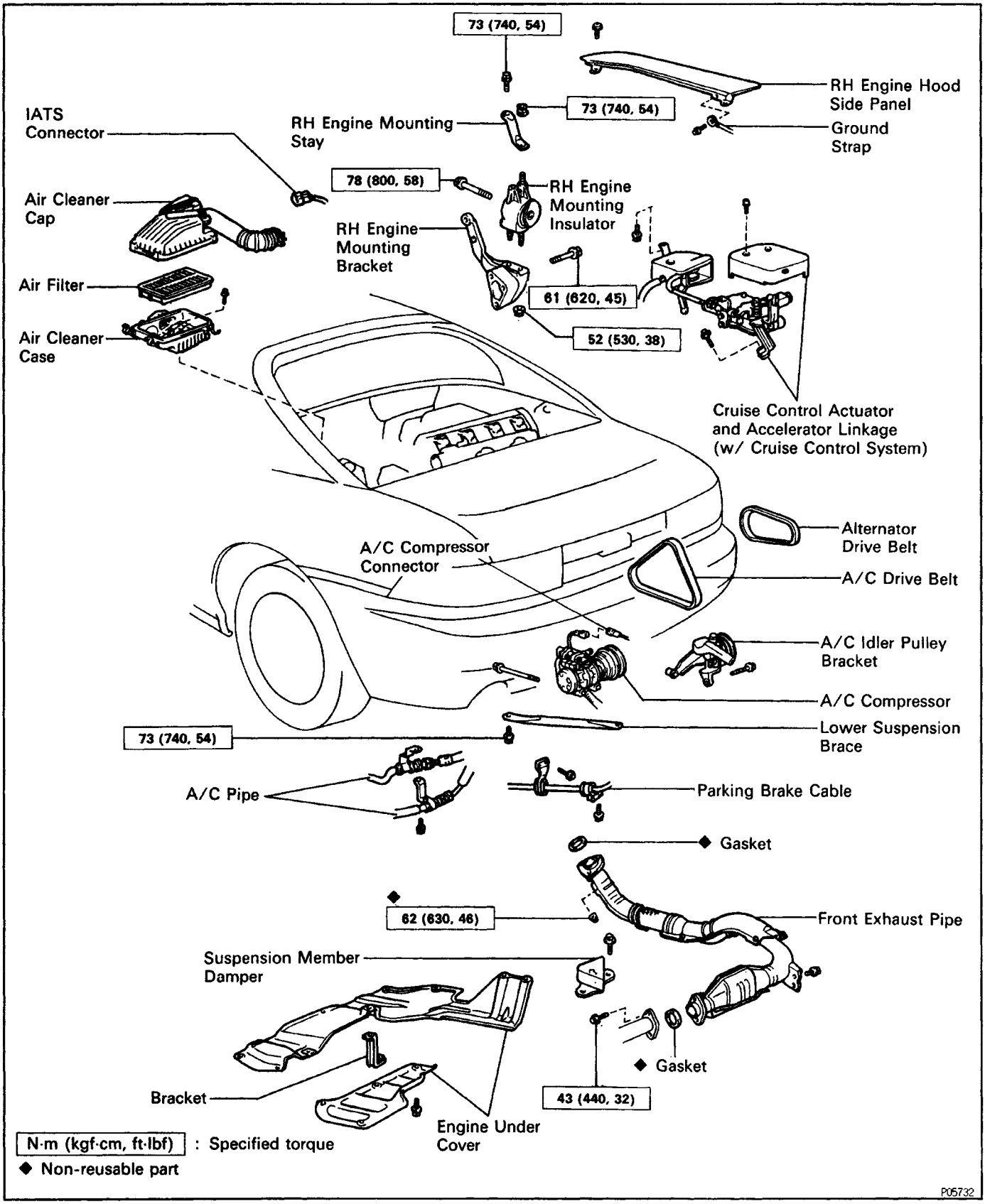

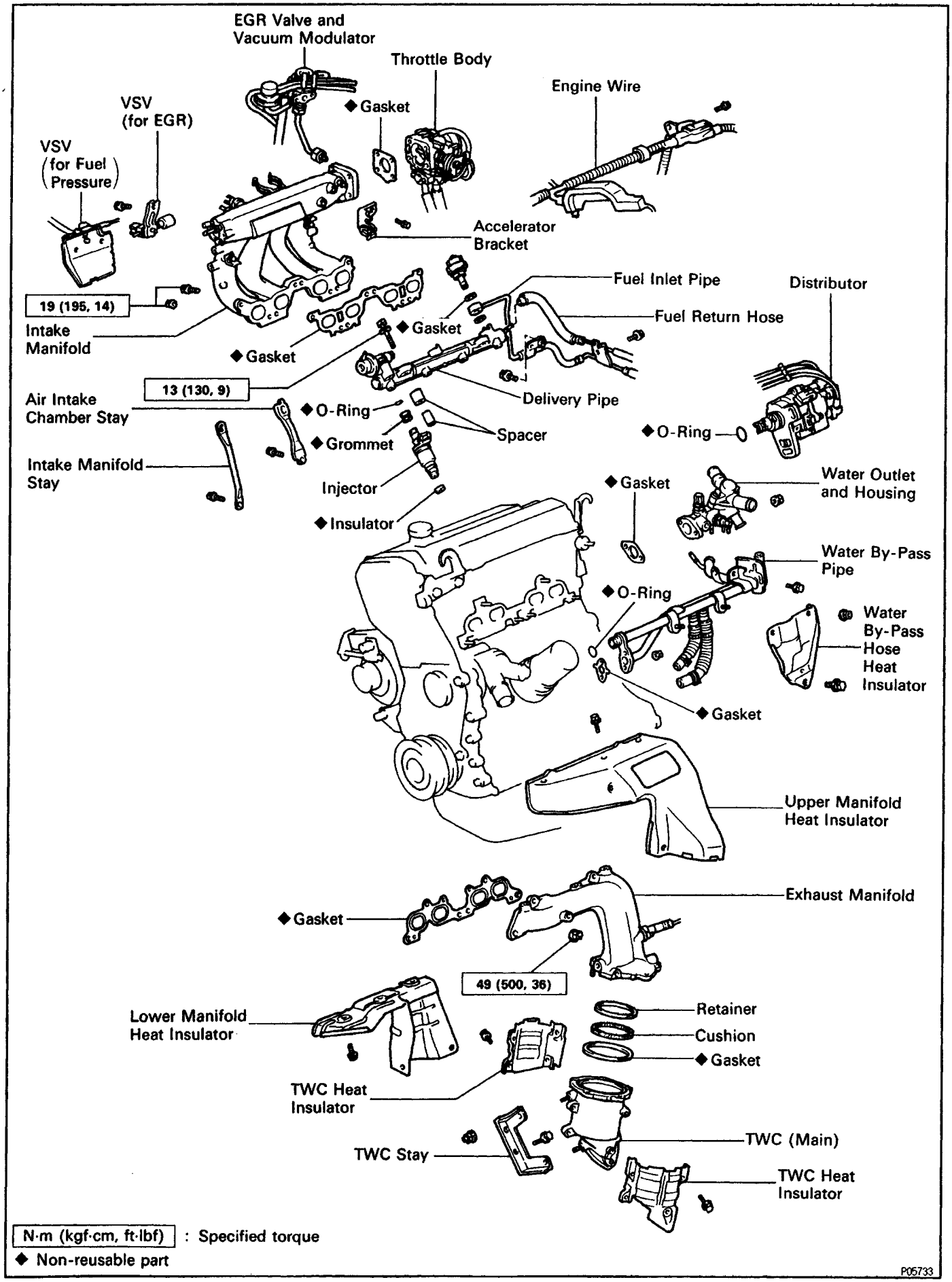
EGR Valve and Vacuum Modulator
Throttle Body
Engine Wire
VSV (for EGR)
◆Gasket
VSV (for Fuel Pressure)
Accelerator Bracket
Fuel Inlet Pipe
Distributor
19 (195, 14)
Intake Manifold
◆Gasket
◆Gasket
Fuel Return Hose
13 (130, 9)
Air Intake Chamber Stay
◆O-Ring
Delivery Pipe
◆Grommet
Spacer
◆O-Ring
Intake Manifold Stay
Injector
◆Insulator
◆Gasket
Water Outlet and Housing
Water By-Pass Pipe
◆O-Ring
Water By-Pass Hose
Heat Insulator
◆Gasket
Upper Manifold Heat Insulator
Exhaust Manifold
◆Gasket
49 (500, 36)
Lower Manifold Heat Insulator
Retainer
Cushion
◆Gasket
TWC Heat Insulator
TWC (Main)
TWC Stay
TWC Heat Insulator
N·m (kgf·cm, ft·lbf) : Specified torque
◆ Non-reusable part
P05733

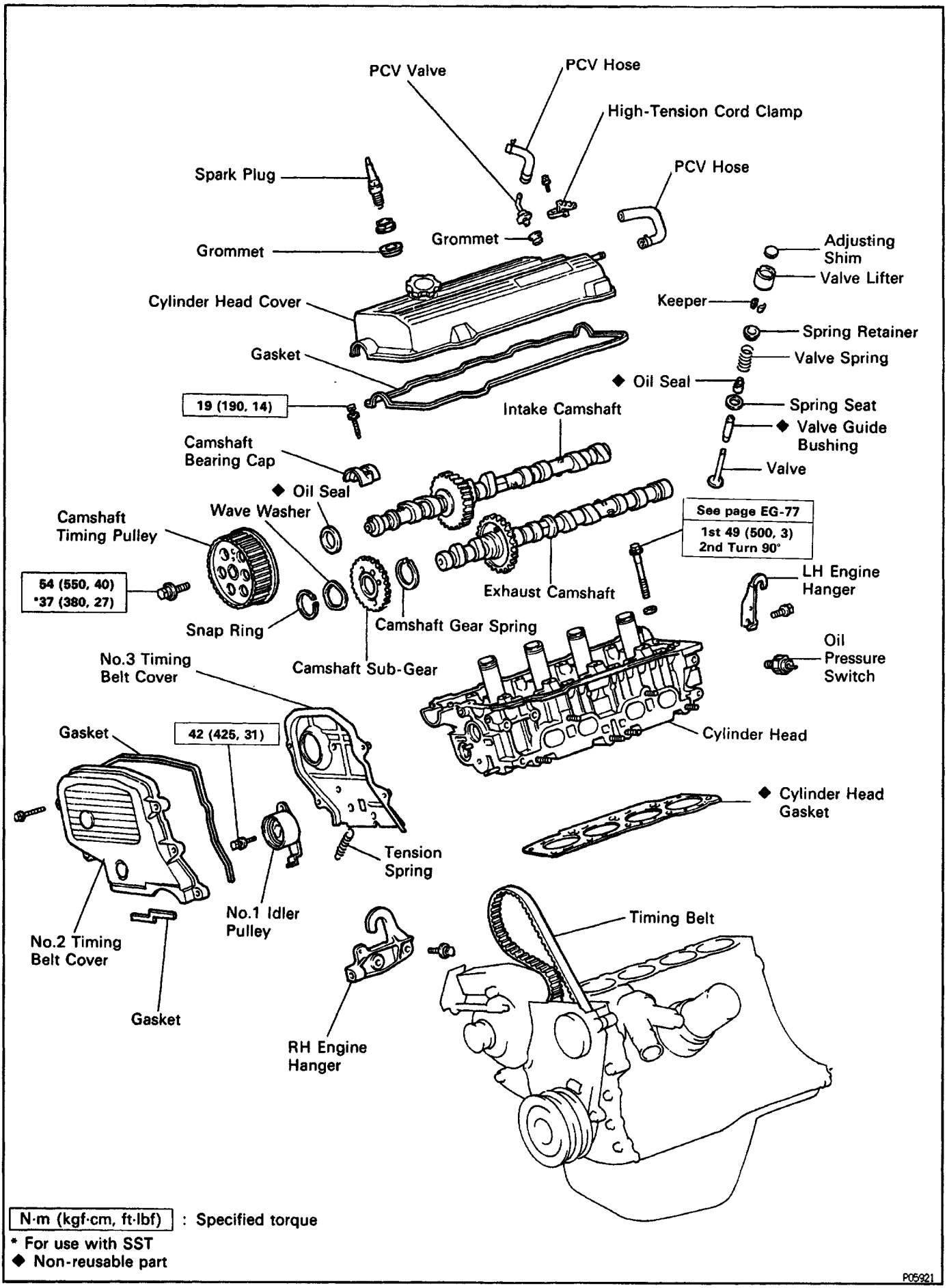
PCV Valve
PCV Hose
High-Tension Cord Clamp
Spark Plug
PCV Hose
Grommet
Grommet
Adjusting Shim
Valve Lifter
Keeper
Cylinder Head Cover
Spring Retainer
Valve Spring
Gasket
◆ Oil Seal
19 (190, 14)
Intake Camshaft
Spring Seat
◆ Valve Guide Bushing
Camshaft Bearing Cap
Valve
◆ Oil Seal
Wave Washer
Camshaft Timing Pulley
See page EG-77
1st 49 (500, 3)
2nd Turn 90°
54 (550, 40)
*37 (380, 27)
LH Engine Hanger
Exhaust Camshaft
Snap Ring
Camshaft Gear Spring
Oil Pressure Switch
No.3 Timing Belt Cover
Camshaft Sub-Gear
Cylinder Head
Gasket
42 (425, 31)
◆ Cylinder Head Gasket
Tension Spring
No.1 Idler Pulley
Timing Belt
No.2 Timing Belt Cover
Gasket
RH Engine Hanger
N·m (kgf·cm, ft·lbf) : Specified torque
* For use with SST
◆ Non-reusable part
P05921

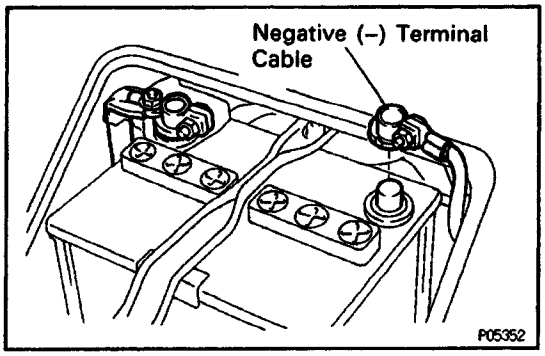

CYLINDER HEAD REMOVAL

(See Components for Removal and Installation)

1. DISCONNECT CABLE FROM NEGATIVE TERMINAL OF BATTERY

CAUTION: Turn the ignition switch to 'LOCK'. Disconnect the negative terminal from the battery. Wait at least 20 seconds before proceeding with work.

2. DRAIN ENGINE COOLANT

3. REMOVE ENGINE UNDER COVERS

4. REMOVE ENGINE HOOD SIDE PANELS

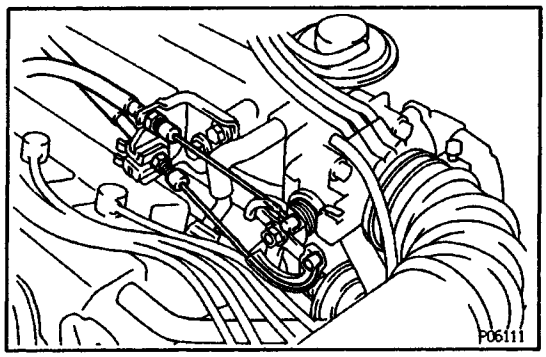

5. DISCONNECT ACCELERATOR LINKAGE FROM THROTTLE BODY

6. (A/T)
DISCONNECT THROTTLE CABLE FROM THROTTLE BODY

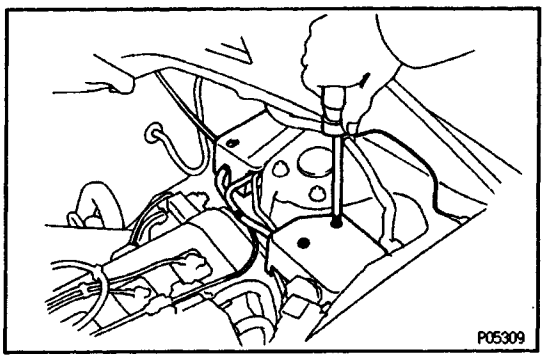

7. (w/ CRUISE CONTROL SYSTEM)
REMOVE CRUISE CONTROL ACTUATOR AND ACCELERATOR LINKAGE

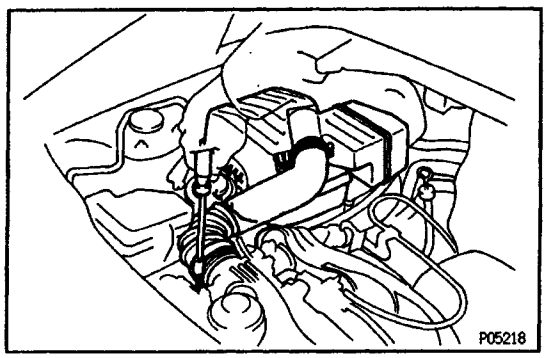

8. REMOVE AIR CLEANER HOUSING

(a) Disconnect the IATS connector.
(b) Disconnect the air cleaner hose from the throttle body.
(c) Disconnect the four clamps, and remove the air cleaner cap.
(d) Remove the air filter.
(e) Remove the three bolts and air cleaner case.

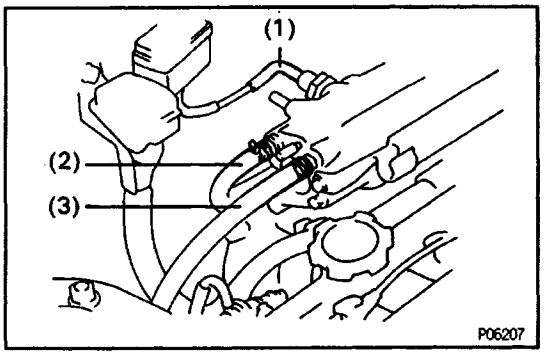

9. DISCONNECT HOSES AND GROUND STRAP

Disconnect the following hoses:
(1) MAP vacuum hose from intake manifold
(2) A/C idle–up air hose (from port F) from intake manifold
(3) Brake booster vacuum hose from intake manifold

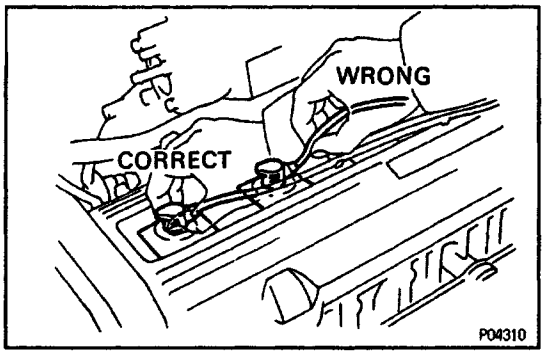

10. REMOVE DISTRIBUTOR

(a) Disconnect the four high–tension cords from the clamp on the cylinder head.
(b) Disconnect the four high–tension cords from the spark plugs.
Disconnect the high – tension cords at the rubber boot. Do not pull on the cords.
NOTICE: Pulling on or bending the cords may damage the conductor inside.

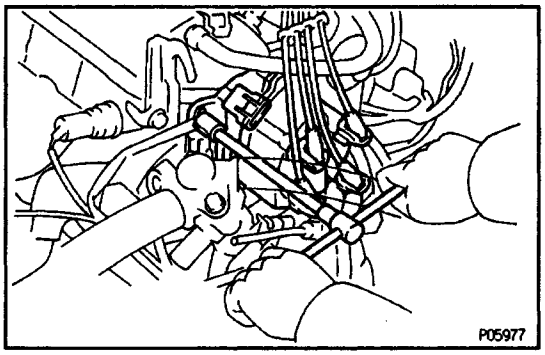

(c) Remove the two bolts, and pull out the distributor.

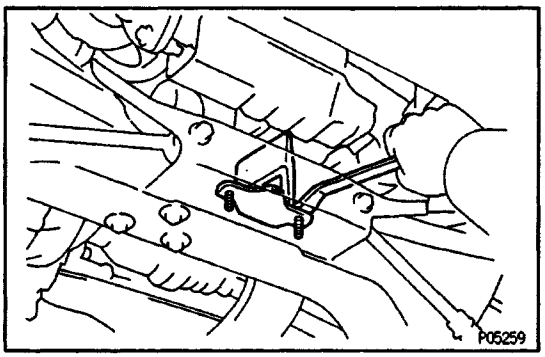

11. REMOVE FRONT EXHAUST PIPE

(a) (CALIF. only)
Remove the two bolts and damper.

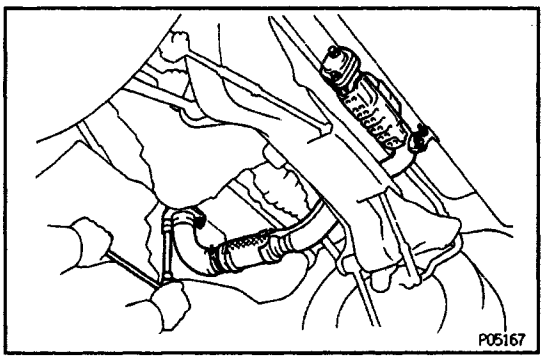

(b) Remove the two bolts holding the front exhaust pipe to the tailpipe bracket.
(c) Remove the two bolts holding the front exhaust pipe to the tailpipe.
(d) Using a 14 mm deep socket wrench, remove the three nuts.
(e) Remove the front exhaust pipe and two gaskets.

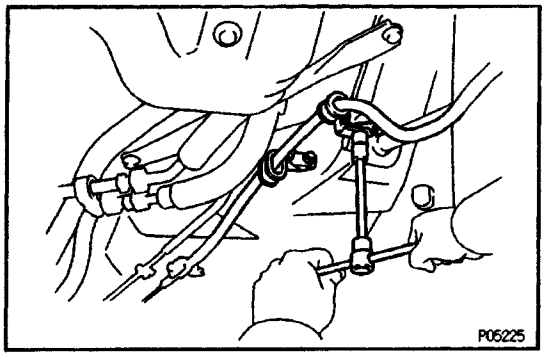

12. DISCONNECT A/C COMPRESSOR FROM ENGINE

(a) Remove the three clamp bolts, and disconnect the parking brake cable.

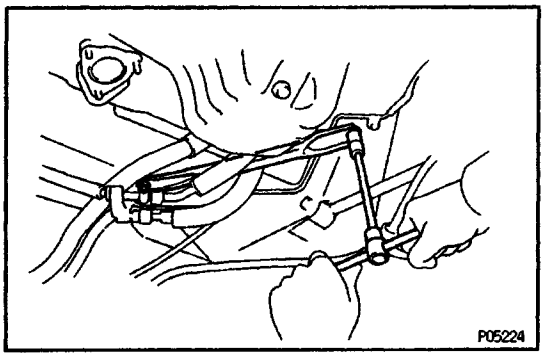

(b) Remove the two bolts and lower suspension brace.

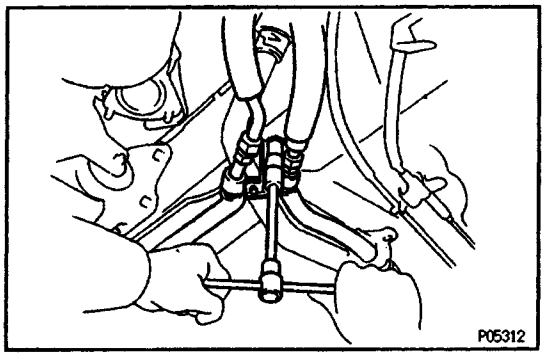

(c) Remove the clamp nut, and disconnect the two A/C pipes.

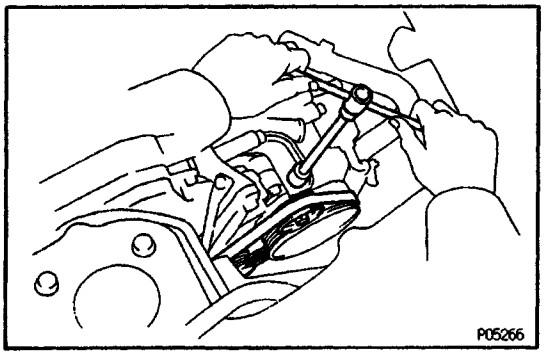

(d) Loosen the idler pulley nut.
(e) Loosen the adjusting bolt, and remove the drive belt.

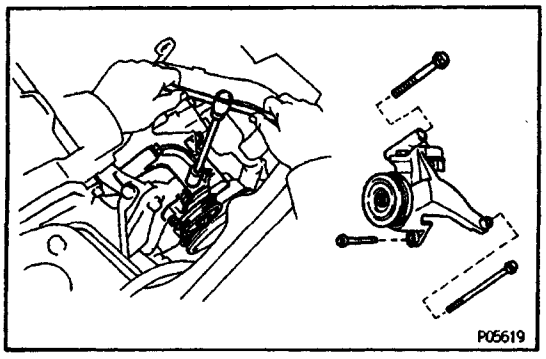

(f) Disconnect the A/C compressor connector.
(g) Remove the three bolts and idler pulley bracket.

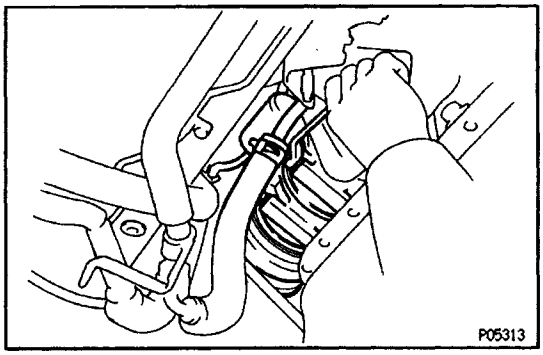

(h) Remove the two bolts, and disconnect the A/C compressor from the engine.

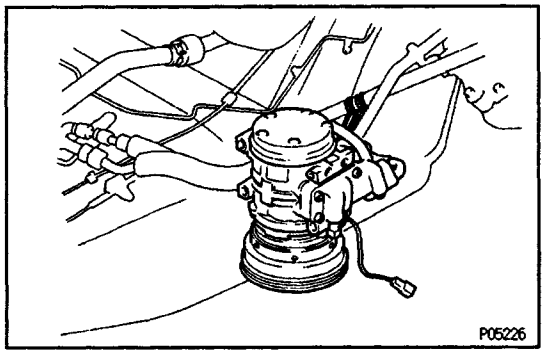

HINT: Suspend the A/C compressor to strut rod with a string.

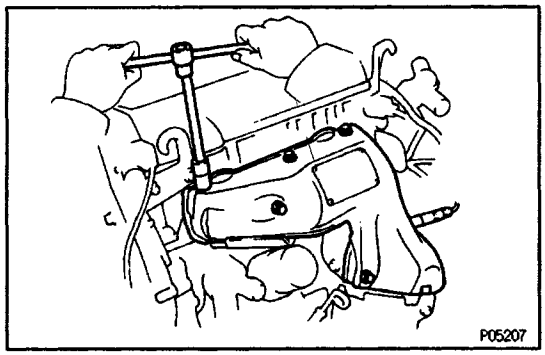

13. REMOVE EXHAUST MANIFOLD AND TWC ASSEMBLY

(a) Disconnect the following connectors:

- Oxygen sensor (main) connector (CALIF. only)
- Sub–oxygen sensor connector

(b) Remove the six bolts and manifold upper heat insulator.

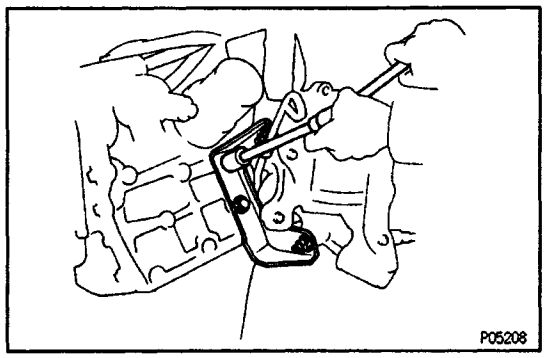

(c) Remove the two bolts, two nuts and TWC stay.

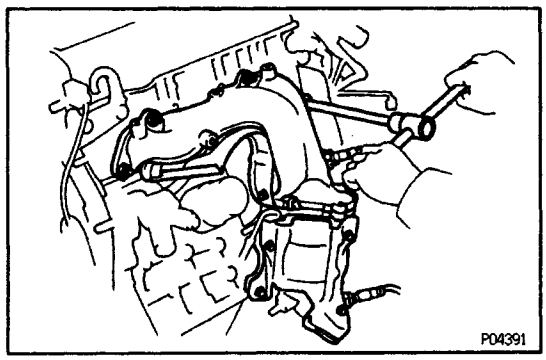

(d) Remove the six nuts, the exhaust manifold and TWC assembly.

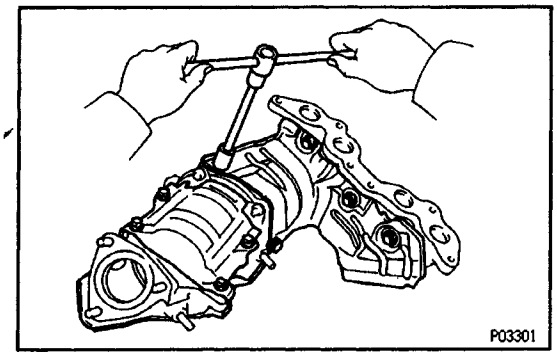

14. SEPARATE EXHAUST MANIFOLD AND TWC

(a) Remove the five bolts and lower manifold heat insulator.

(b) Remove the eight bolts and two TWC heat insulator.

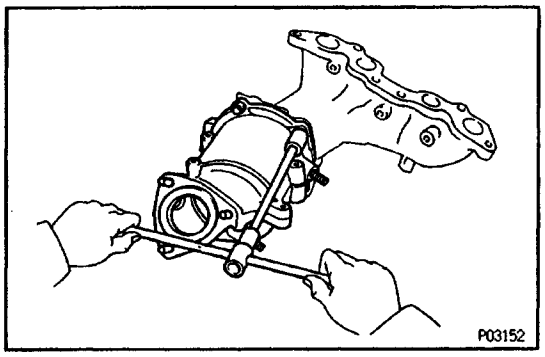

(c) Remove the three bolts, two nuts, catalytic converter, gasket, retainer and cushion.

15. DISCONNECT OIL PRESSURE SWITCH CONNECTOR

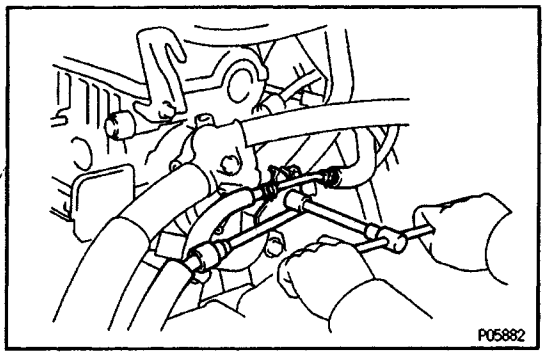

16. REMOVE WATER OUTLET AND HOUSING

(a) Remove the bolt, and disconnect the fuel inlet pipe (with the fuel return tube) from the water outlet housing.

(b) Disconnect the following connectors:

- Water temperature sender gauge connector
- ECTS connector

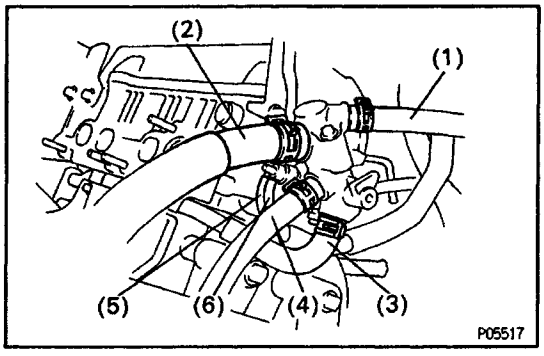

(c) Disconnect the following hoses:

(1) Water filler hose
(2) Radiator hose
(3) Water by–pass pipe hose
(4) Heater water hose
(5) Vacuum hose (from P port of throttle body) from upper port of TVS
(6) Vacuum hose (from charcoal canister) from lower port of TVS

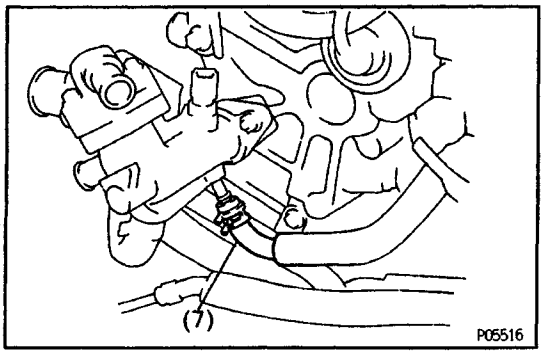

(7) IACV water by–pass hose

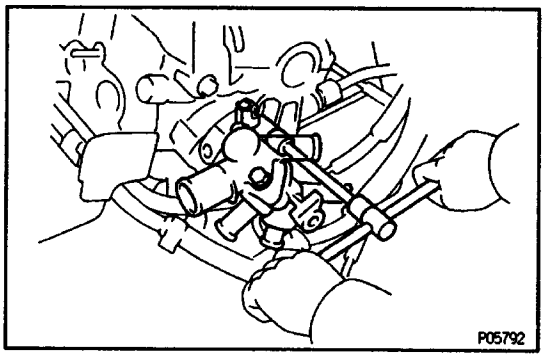

(d) Remove the two bolts, the water outlet, housing assembly and gasket.

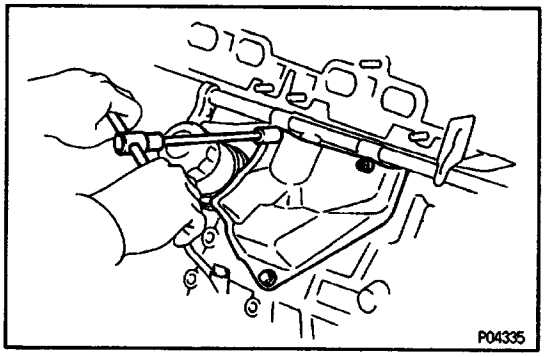

17. REMOVE WATER BY–PASS PIPE

(a) Remove the bolt, two nuts and water by–pass heat protector.

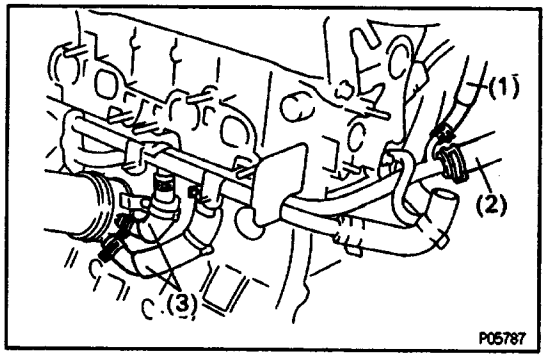

(b) Disconnect the following hoses:
(1) IACV water by–pass hose
(2) Heater water hose
(3) Two oil cooler water by–pass hoses

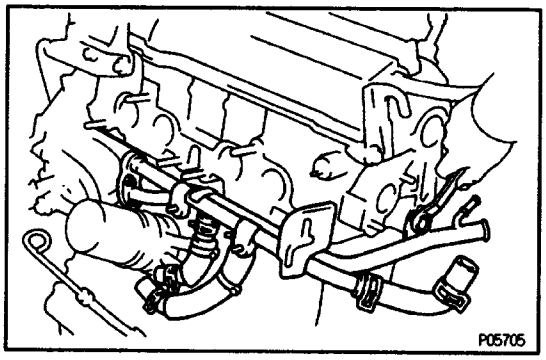

(c) Remove the two bolts, two nuts, water by– pass pipe and gasket.
(d) Remove the O–ring from the water by–pass hose.

18. REMOVE THROTTLE BODY

(a) Disconnect the following connector:
Throttle position sensor connector
IACV connector

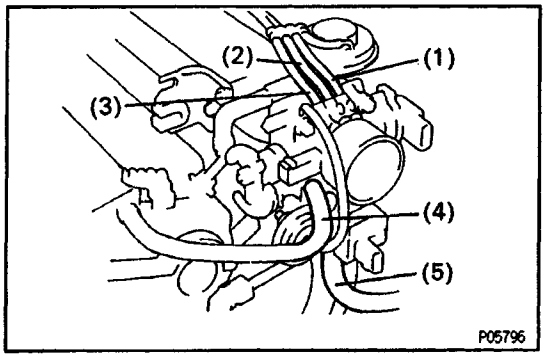

(b) Disconnect the following hoses:
(1) Vacuum hose (from upper port of TVS) from port "P" of throttle body ,
(2) Vacuum hose (from port "Q" of EGR vacuum modulator) from port "E" of throttle body
(3) Vacuum hose (from port "R" of EGR vacuum modulator) from port "R" of throttle body
(4) PCV hose (from cylinder head) from throttle body
(5) Air hose (from A/C idle–up valve)

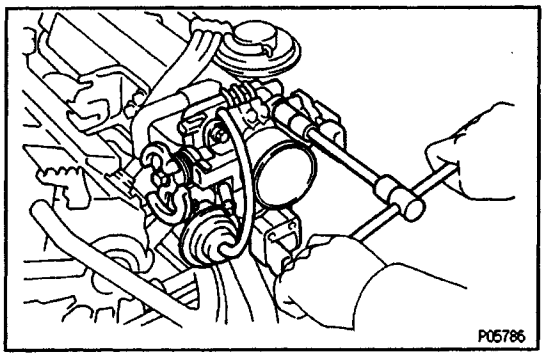

(c) Remove the four bolts, throttle body and gasket.

19. REMOVE EGR VALVE AND VACUUM MODULATOR

(a) (CALIF. only)
Disconnect EGR function sensor connector.
(b) Remove the bolt, and disconnect the vacuum hose clamp from the intake manifold.
(c) Remove the following hoses:
(1) Vacuum hose from charcoal canister.
(2) Vacuum hose (from EGR valve) from port E of VSV (for EGR)
(3) Vacuum hose (from "Q" port of EGR vacuum modulator) from port G of VSV (for EGR)
(d) Loosen the union nut of the EGR pipe, and remove two nuts, the EGR valve, vacuum modulator, vacuum hoses assembly and gasket.

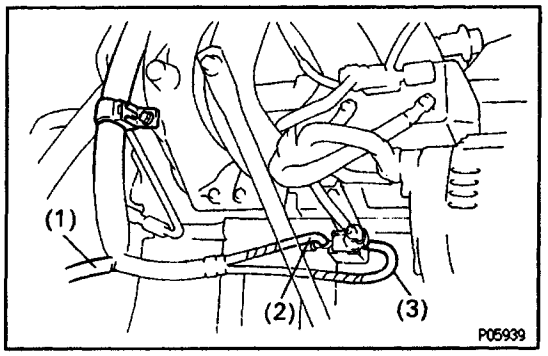

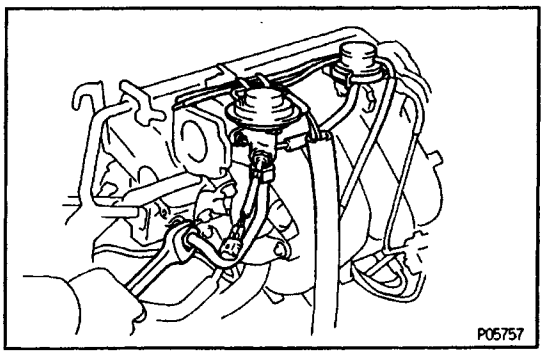

20. REMOVE VSV FOR FUEL PRESSURE

(a) Disconnect the VSV connector.
(b) Disconnect the following hoses:
(1) Vacuum hose (from port E of VSV) from fuel pressure regulator
(2) Vacuum hose (from port G of VSV) from gas filter.

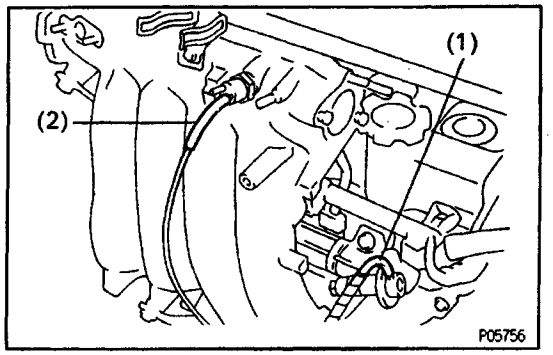

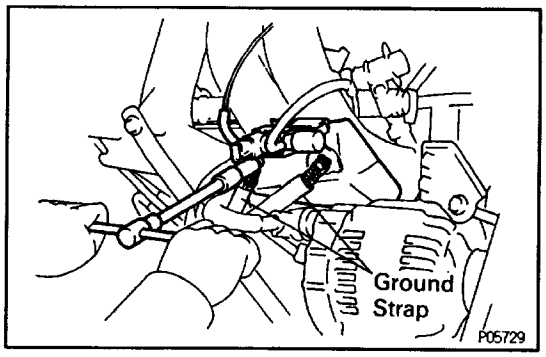

(c) Remove the two bolts, and VSV. Disconnect the two ground straps.

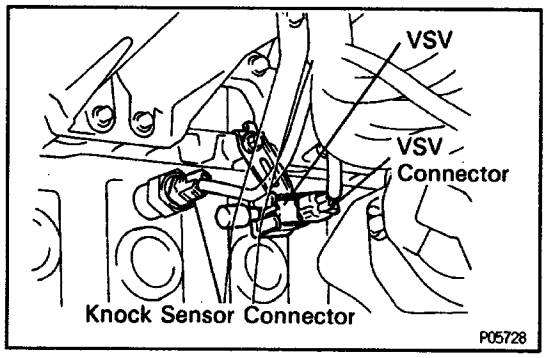

21. DISCONNECT KNOCK SENSOR CONNECTOR

22. REMOVE EGR VSV

(a) Disconnect the VSV connector.

(b) Remove the bolt and VSV.

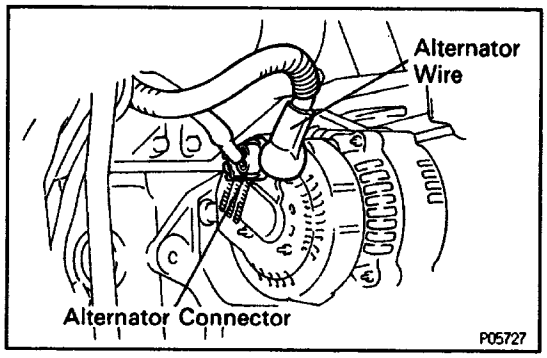

23. REMOVE INTAKE MANIFOLD

(a) Disconnect the alternator connector and wire.

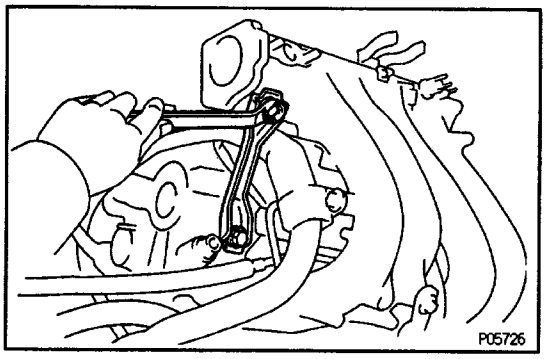

(b) Remove the two bolts and air intake chamber stay.

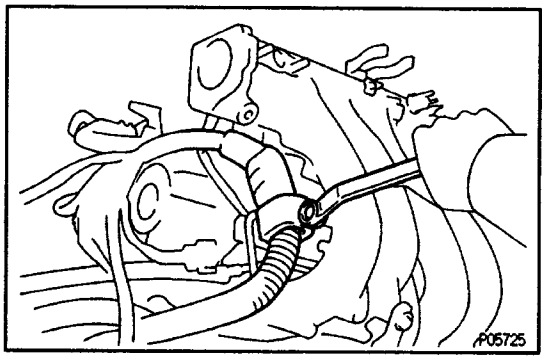

(c) Remove the bolt, and disconnect the engine wire protector from the RH side of the intake manifold.

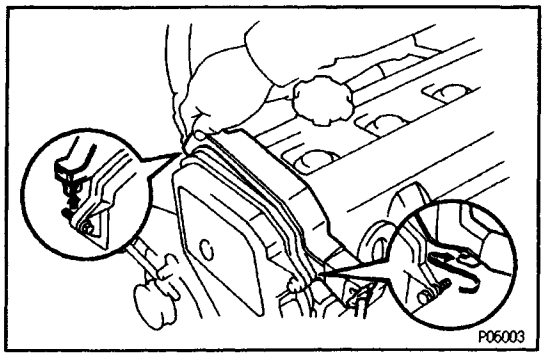

(d) Disconnect the engine wire protector between the No. 3 timing belt and cylinder head cover.

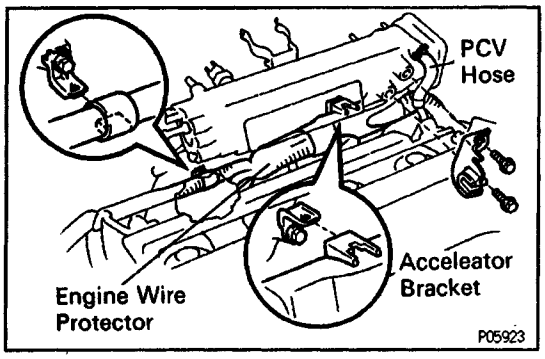

(e) Remove the two bolts and accelerator bracket.
(f) Disconnect the PCV hose from the intake manifold.
(g) Disconnect the engine wire protector from the two brackets on the front side of the intake manifold.

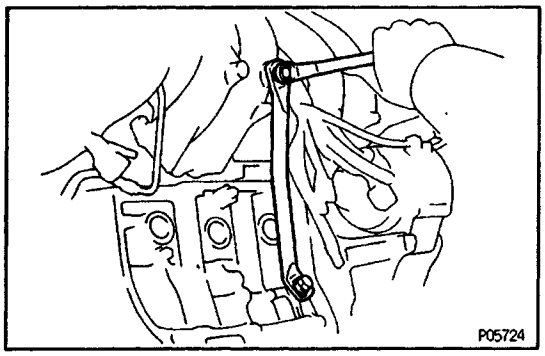

(h) Remove the two bolts and intake manifold stay.

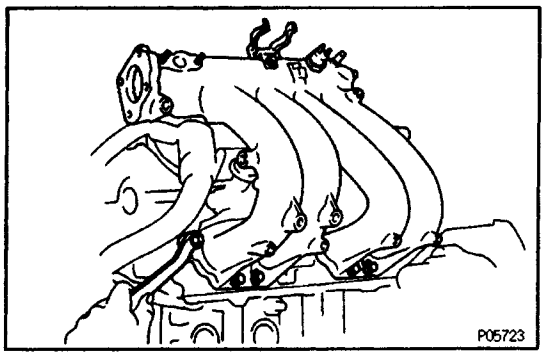

(i) Remove the six bolts, two nuts, intake manifold and gasket.

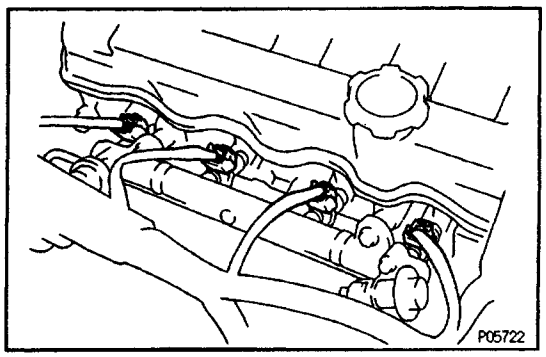

24. REMOVE DELIVERY PIPE AND INJECTORS

(a) Disconnect the injector connectors.

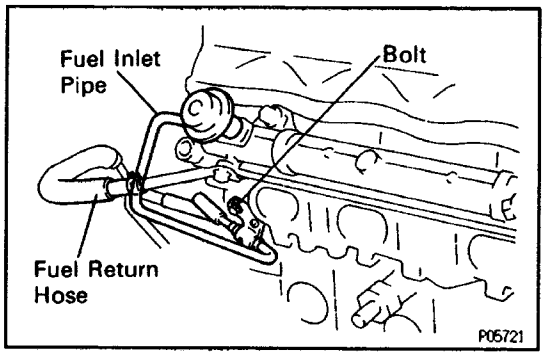

(b) Disconnect fuel return hose.
(c) Remove the bolt holding the fuel inlet pipe to the cylinder head.
(d) Remove the pulsation damper and two gaskets, and disconnect the fuel inlet pipe from the delivery pipe.

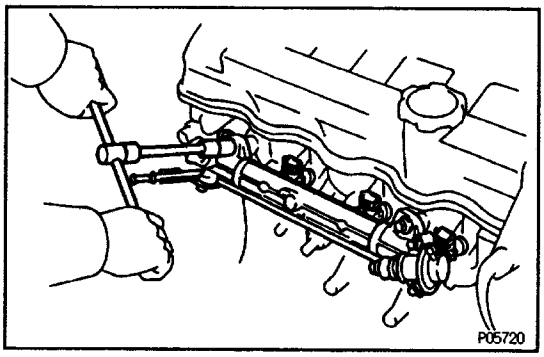

(d) Remove the two bolts and delivery pipe together with the four injectors.
NOTICE: Be careful not to drop the injectors when removing the delivery pipe.
(e) Remove the four insulators and two spacers from the cylinder head.
(f) Pull out the four injectors from the delivery pipe.
(g) Remove the O–ring and grommet from each injector.

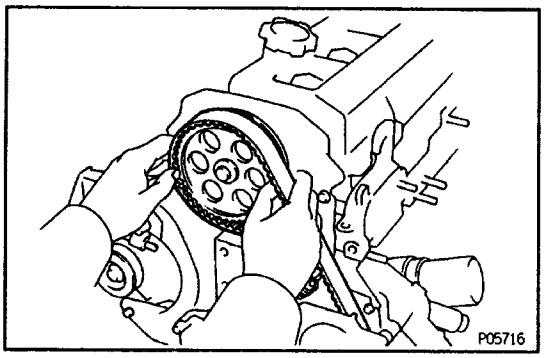

25. DISCONNECT TIMING BELT FROM CAMSHAFT TIMING PULLEY
(See steps 10 to 17 in Timing Belt Removal)

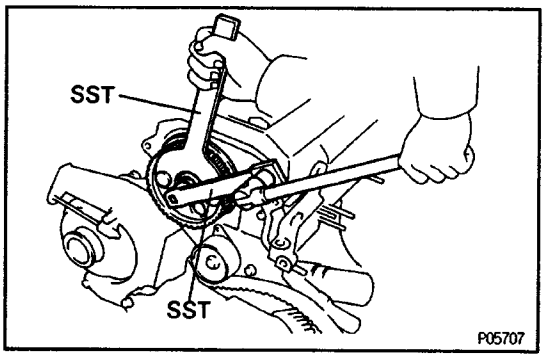

26. REMOVE CAMSHAFT TIMING PULLEY
Using SST, remove the bolt, and timing pulley.
SST 09249–63010,09278–54012

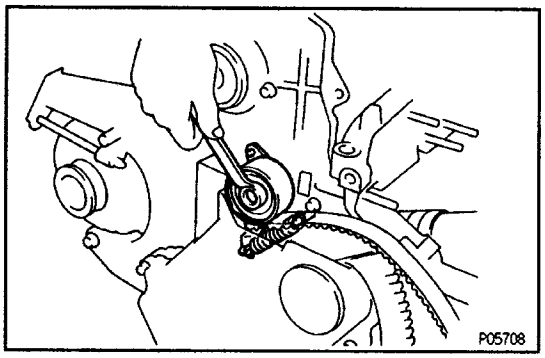

27. REMOVE NO.1 IDLER PULLEY AND TENSION SPRING
Remove the bolt, pulley and tension spring.

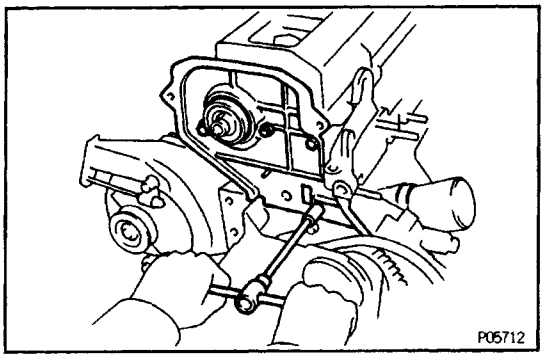

28. REMOVE No.3 TIMING BELT COVER
Remove the four bolts and timing and cover.

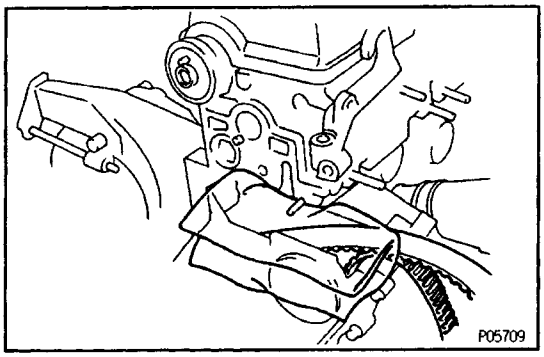

NOTICE:
- **Support the timing belt, so the meshing of crank–shaft timing pulley and timing belt does not shift.**
- **Be careful not to drop anything inside the timing belt cover.**
- **Do not allow the belt to come into correct with oil, water or dust.**

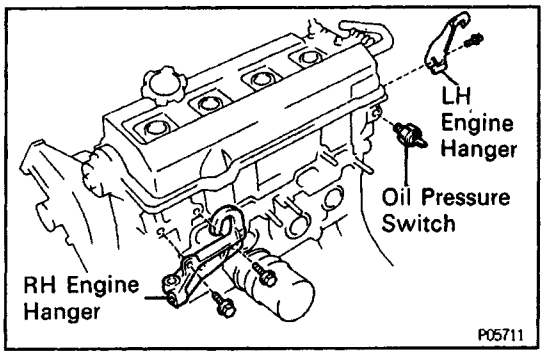

29. REMOVE ENGINE HANGERS
(a) Remove the two bolts and RH engine hanger.
(b) Remove the bolt and LH engine hanger.
30. REMOVE OIL PRESSURE SWITCH

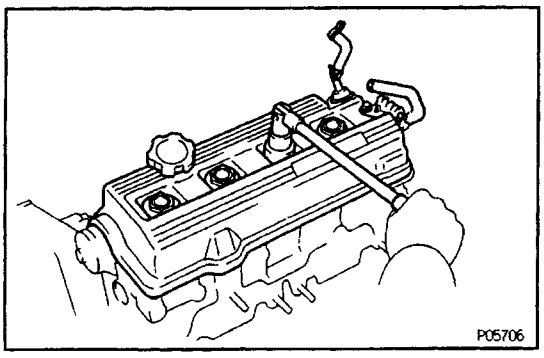

31. REMOVE CYLINDER HEAD COVER
Remove the four nuts, grommets, head cover and gasket.

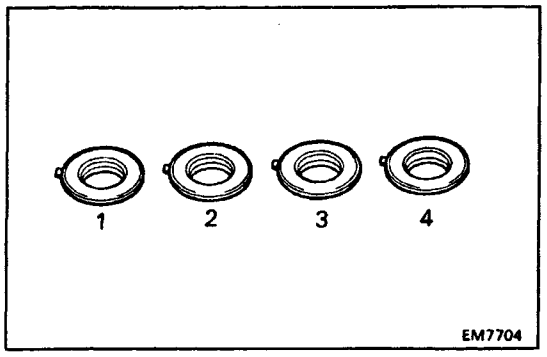

HINT: Arrange the grommets in correct order, so that they can be reinstalled into their original positions. This minimizes any possibility of oil leakage due to reuse of grommets.

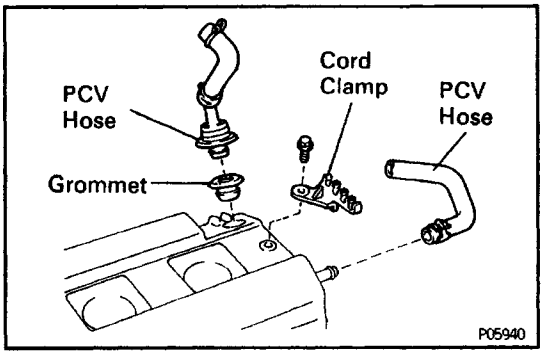

32. REMOVE HIGH–TENSION CORD CLAMP, PCV VALVE AND HOSE

33. REMOVE CAMSHAFTS

NOTICE: Since the thrust clearance of the camshaft is small, the camshaft must be kept level while it is being removed. If the camshaft is not kept level, the portion of the cylinder head receiving the shaft thrust may crack or be damaged, causing the camshaft to seize or break. To avoid this, the following steps should be carried out.

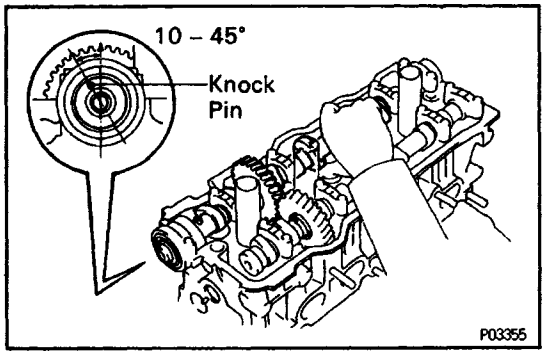

A. Remove exhaust camshaft

(a) Set the knock pin of the intake camshaft at 10 – 45° BTDC of camshaft angle.

HINT: The above angle allows No.2 and No.4 cylinder cam lobes of the exhaust camshaft to push their valve lifters evenly.

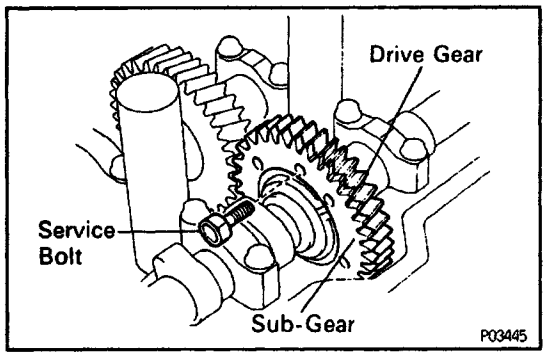

(b) Secure the exhaust camshaft sub–gear to drive gear with a service bolt.

Recommended service bolt:

Thread diameter 6 mm

Thread pitch 1.0 rnm

Bolt length 16 – 20 mm (0.63 – 0.79 in.)

HINT: When removing the camshaft, make sure that the torsional spring force of the sub–gear has been eliminated by the above operation.

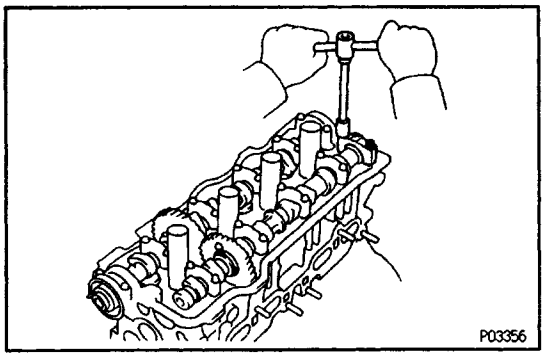

(c) Remove the two bolts and rear bearing cap.

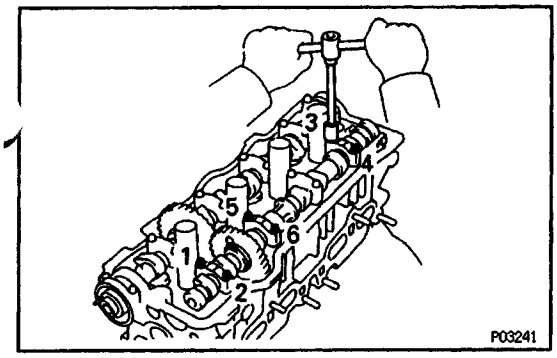

(d) Uniformly loosen and remove the six bolts on the No. 1. No.2 and No.4 bearing caps in several passes, in the sequence shown.

NOTICE: Do not remove the No.3 bearing cap bolts at this stage.

(e) Remove the No.1, No.2 and No.4 bearing caps.

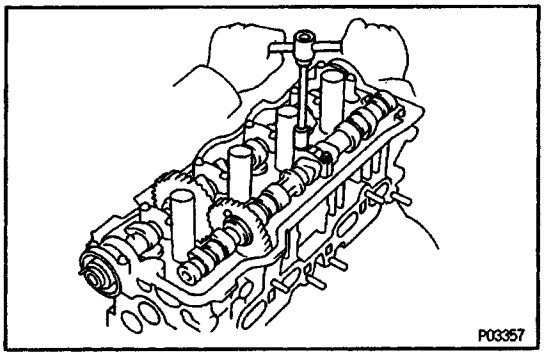

(f) Alternately loosen and remove the two bolts on the No.3 bearing cap.

HINT:

- As the two No.3 bearing cap bolts are loosened, make sure that the camshaft is lifted out straight and level.
- If the camshaft is not being lifted out straight and level, tighten the two No.3 bearing cap bolts. Then reverse the order of above steps from (f) to (a) and reset the knock pin of the intake camshaft at 10 – 45° BTDC, and repeat steps from (b) to (f) once again.

NOTICE: Do not pry on or attempt to force the camshaft with s tool or other object.

(g) Remove the No.3 bearing cap and exhaust camshaft.

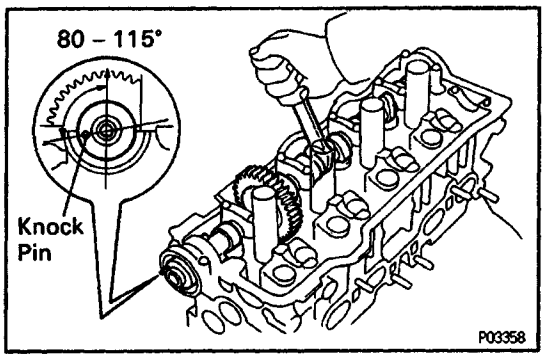

B. Remove intake camshaft

(a) Set the knock pin of the intake camshaft at 80 – 115° BTDC of camshaft angle.

HINT: The above angle allows the No.1 and No.3 cylinder cam lobes of intake camshaft to push their valve lifters evenly.

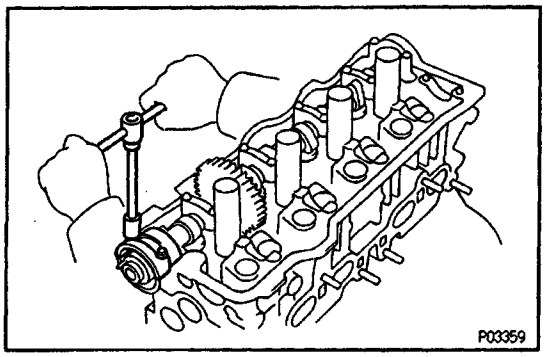

(b) Remove the two bolts, front bearing cap and oil seal.

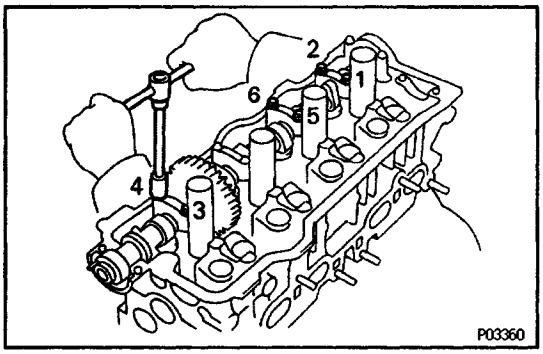

(c) Uniformly loosen and remove the six bolts on the No. 1, No.3 and No.4 bearing caps in several passes, in the sequence shown. ,

NOTICE: Do not remove the No.2 bearing cap bolts at this stage.

(d) Remove the No.1, No.3 and No.4 bearing caps.

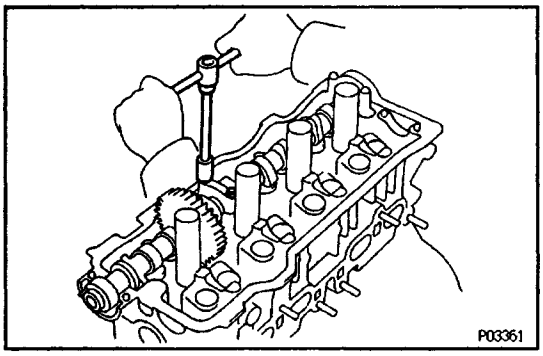

(e) Alternately loosen and remove the two bolts on the No.2 bearing cap.

HINT:

- As the two No.2 bearing cap bolts are loosened, make sure that the camshaft is lifted out straight and level, after breaking adhesion on the front bearing cap.
- If the camshaft is not being lifted out straight and level, retighten the two No.2 bearing cap bolts. Reverse the order of above steps from (e) to (a) and reset the knock pin of the intake camshaft at 80 – 115° BTDC, and repeat steps from (b) to (e) once again.
  NOTICE: Do not pry on or attempt to force the camshaft with a tool or other object.

(f) Remove the No.2 bearing cap and camshaft.

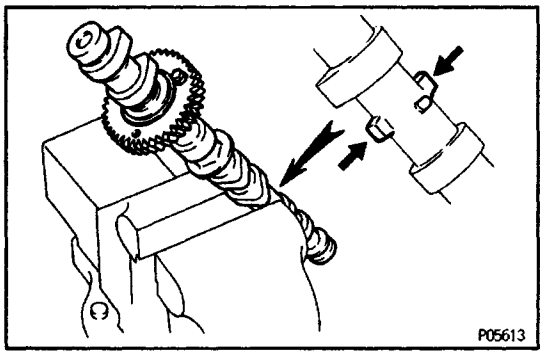

34. DISASSEMBLE EXHAUST CAMSHAFT

(a) Mount the hexagon wrench head portion of the camshaft in a vise.

NOTICE: Be careful not to damage the camshaft.

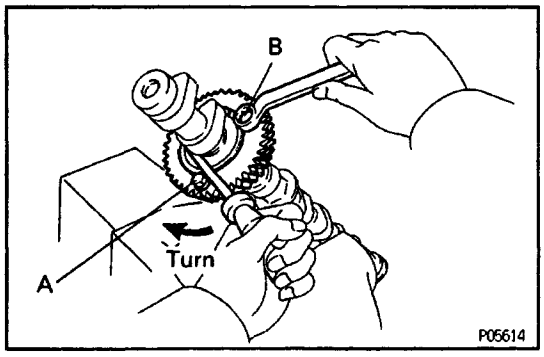

(b) insert service bolt A into the service hole of the camshaft sub–gear.

(c) Using a screwdriver, turn the sub–gear clockwise, and remove service bolt B.

NOTICE: Be careful not to damage the camshaft.

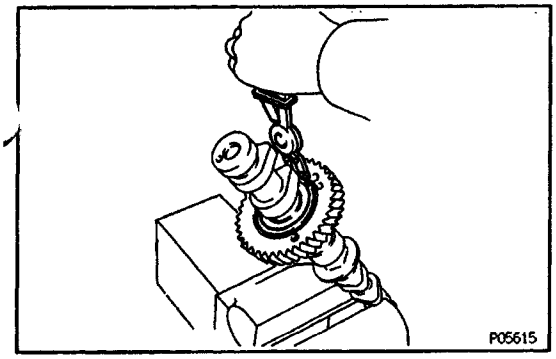

(d) Using snap ring pliers, remove the snap ring.

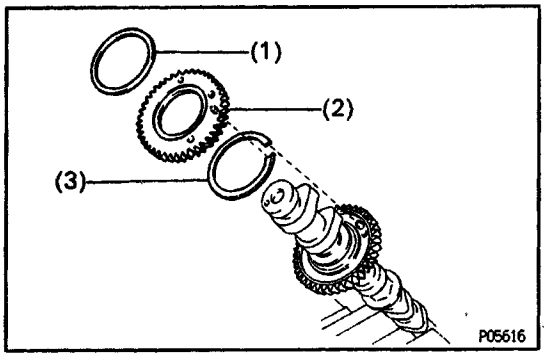

(e) Remove the following parts:
(1) Wave washer
(2) Camshaft sub–gear
(3) Camshaft gear spring

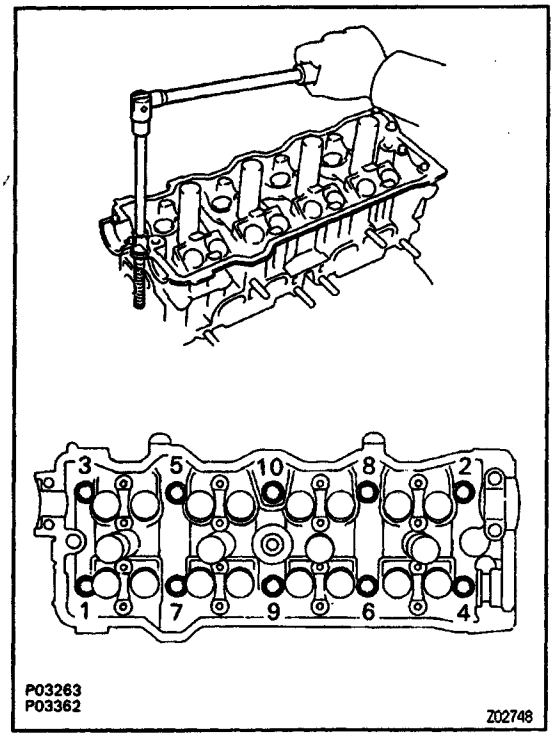

35. REMOVE CYLINDER HEAD

(a) Uniformly loosen and remove the ten cylinder head bolts in several passes, in the sequence shown.

NOTICE: Cylinder head warpage or cracking could result from removing bolts in incorrect order.

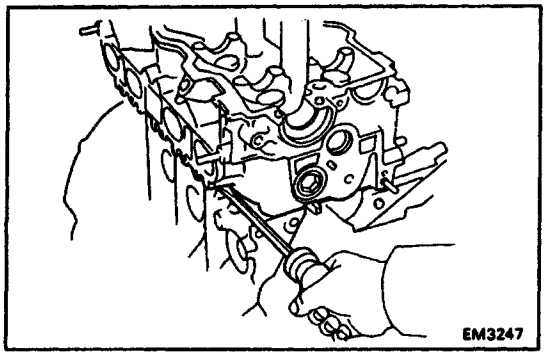

(b) Lift the cylinder head from the dowels on the cylinder block, and place the cylinder head on wooden blocks on a bench.

HINT: If the cylinder head is oft, pry between the cylinder head and cylinder block with a screwdriver.

NOTICE: Be careful not to damage the contact surfaces of the cylinder head and cylinder block.

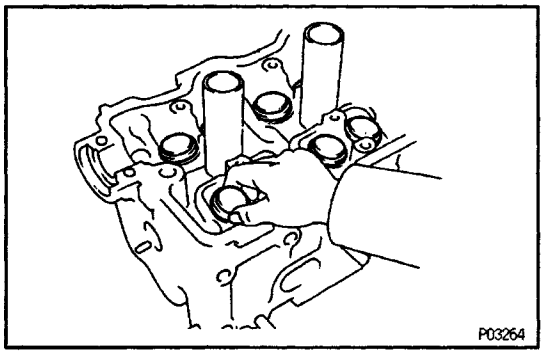

CYLINDER HEAD DISASSEMBLY

EG11C–01

(See Components for Removal and Installation)

1. REMOVE VALVE LIFTERS AND SHIMS

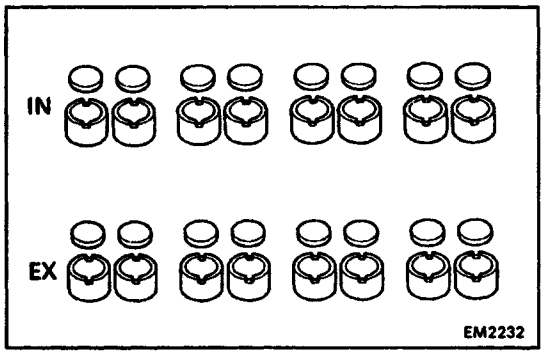

HINT: Arrange the valve lifters and shims in correct order.

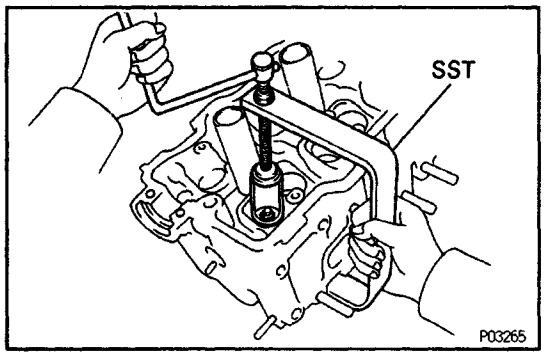

2. REMOVE VALVES

(a) Using SST, compress the valve spring and remove the two keepers.

SST 09202–70010

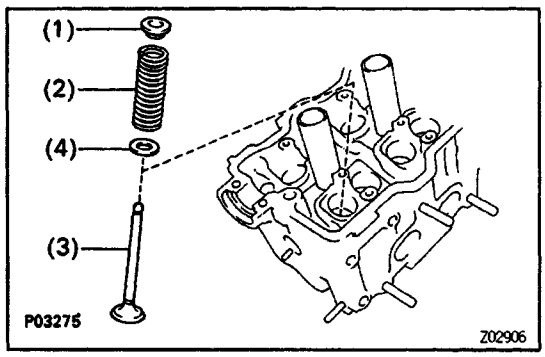

(b) Remove the following parts:

(1) Spring retainer
(2) Valve spring
(3) Valve
(4) Spring seat

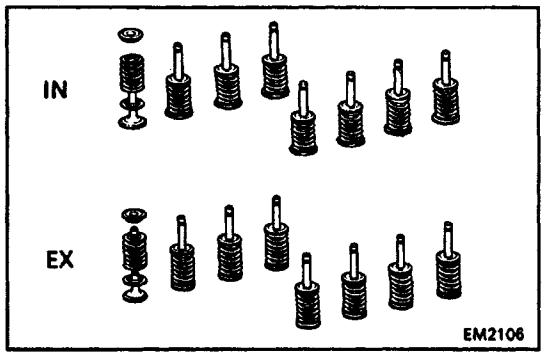

HINT: Arrange the valves, valve springs, spring seats and spring retainers incorrect order.

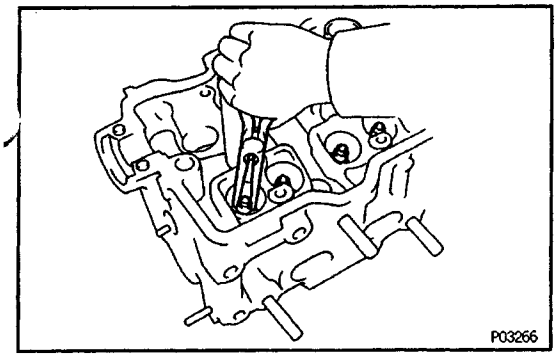

(c) Using needle–nose pliers, remove the oil seal.

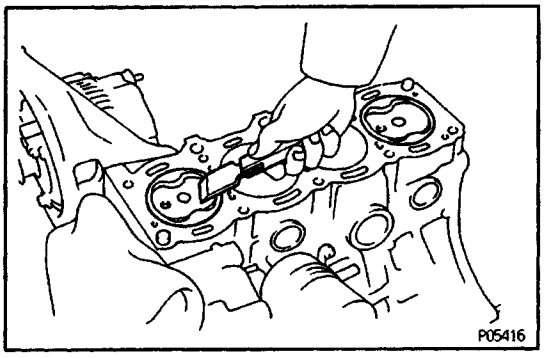

EG11D–01

CYLINDER HEAD COMPONENTS INSPECTION AND REPAIR

1. CLEAN TOP SURFACES OF PISTONS AND CYLINDER BLOCK

(a) Turn the crankshaft, and bring each piston to top dead center (TDC). Using a gasket scraper, remove all the carbon from the piston top surface.

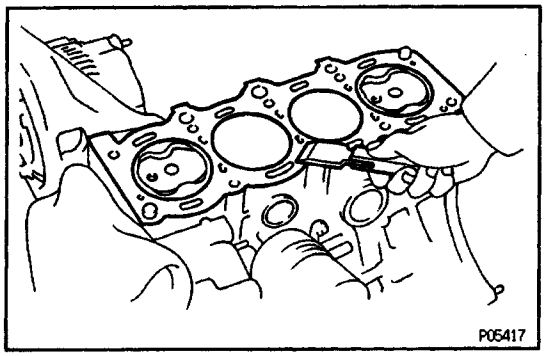

(b) Using a gasket scraper, remove all the gasket material from the cylinder block surface.

(c) Using compressed air, blow carbon and oil from the bolt holes.

CAUTION: Protect your eyes when using high – com– pressed air.

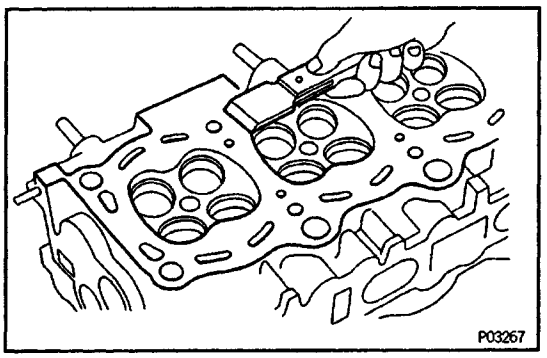

2. CLEAN CYLINDER HEAD

A. Remove gasket material

Using a gasket scraper, remove all the gasket material from the cylinder block contact surface.

NOTICE: Be careful not to scratch the cylinder block contact surface.

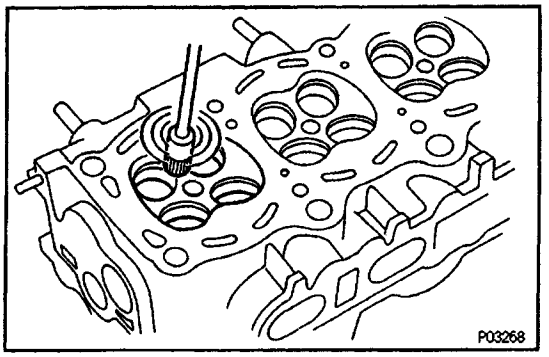

B. Clean combustion chambers

Using a wire brush, remove all the carbon from the combustion chambers.

NOTICE: Be careful not to scratch the cylinder block contact surface.

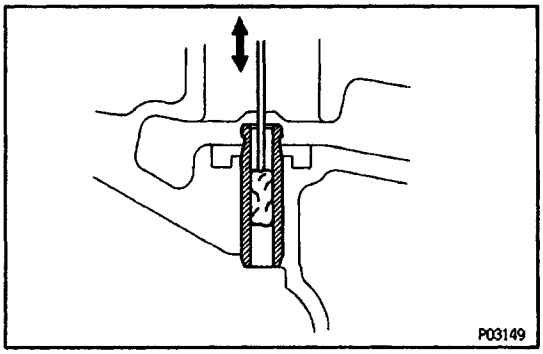

C. Clean valve guide bushings

Using a valve guide bushing brush and solvent, clean all the guide bushings.

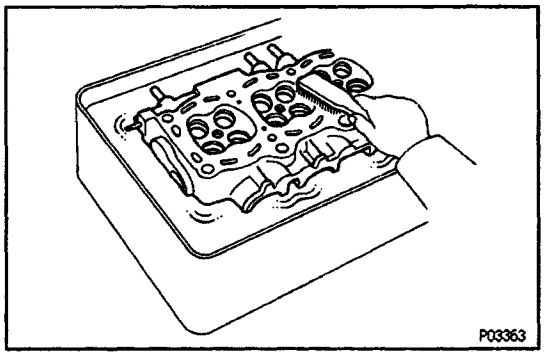

D. Clean cylinder head

Using a soft brush and solvent, thoroughly clean the cylinder head.

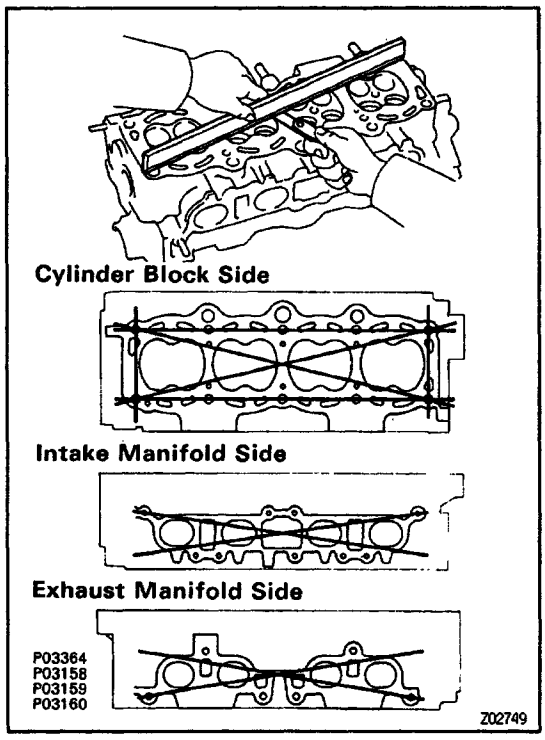

3. INSPECT CYLINDER HEAD

A. Inspect for flatness

Using a precision straight edge and feeler gauge, measure the surfaces contacting the cylinder block and the manifolds for warpage.

Maximum warpage:

Cylinder block side

0.05 mm (0.0020 in.)

Manifold side

0.08 mm (0.0031 in.)

If warpage is greater than maximum, replace the cyl–inder head.

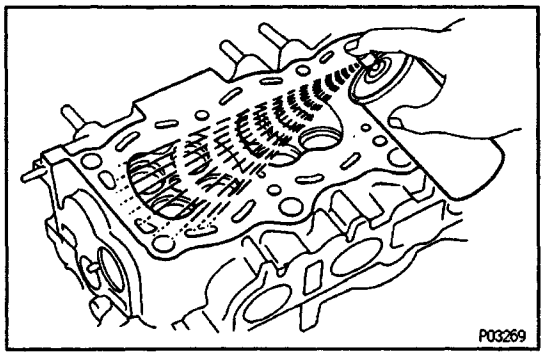

B. Inspect for cracks

Using a dye penetrant, check the combustion cham–ber, intake ports, exhaust ports and cylinder block surface for cracks.

If cracked, replace the cylinder head.

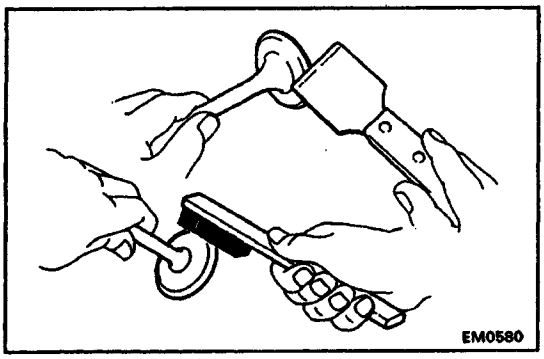

4. CLEAN VALVES

(a) Using a gasket scraper, chip off any carbon from the valve head.

(b) Using a wire brush, thoroughly clean the valve.

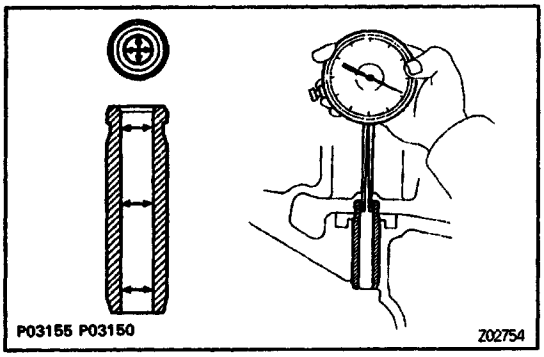

5. INSPECT VALVE STEMS AND GUIDE BUSHINGS

(a) Using a caliper gauge, measure the inside diameter of the guide bushing.

Bushing inside diameter:

6.010 –6.030 mm (0.2366 – 0.2374 in.)

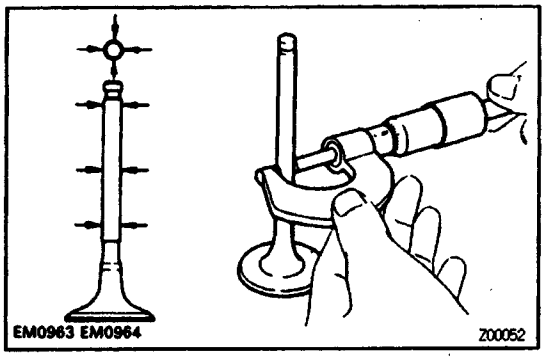

(b) . Using a micrometer, measure the diameter of the valve stern.

Valve stem diameter:

Intake

5.970 – 5.985 mm (0.2350 – 0.2356 in.)

Exhaust

5.965 – 5.980 mm (0.2348 – 0.2354 in.)

(c) Subtract the valve stem diameter measurement from the guide bushing inside diameter measurement.

Standard oil clearance:

Intake

0.025 – 0.060 mm (0.0010 – 0.0024 in.)

Exhaust

0.030 – 0.065 mm (0.0012 – 0.0026 in.)

Maximum oil clearance:

Intake

0.08 mm (0.0031 in.)

Exhaust

0.10 mm (0.0039 in.)

If the clearance is greater than maximum, replace the valve and guide bushing.

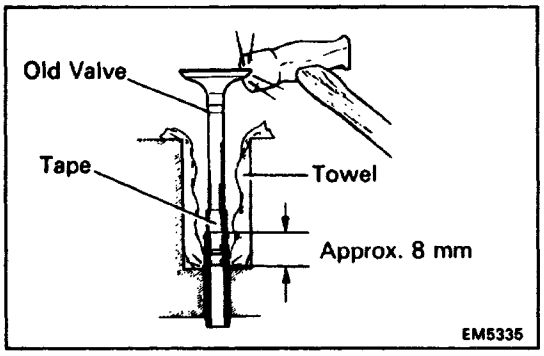

6. IF NECESSARY, REPLACE VALVE GUIDE BUSHINGS

(a) (Exhaust (w/ Snap Ring))
Insert an old valve wrapped with tape into the valve guide bushing, and break off the valve guide bushing by hitting it with a hammer. Remove the snap ring.
HINT: Wrap the tape approx. 8 mm (0.31 in.) from the valve stem end.
NOTICE: Be careful not to damage the valve lifter hole.

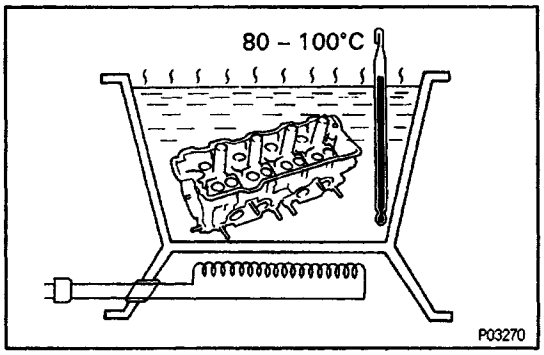

(b) Gradually heat the cylinder head to 80 – 100˚C (176 – 212˚ F).

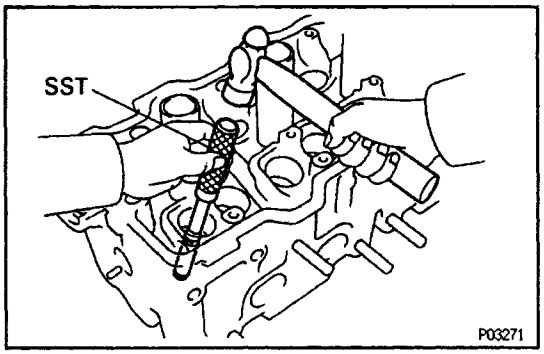

(c) Using SST and a hammer, tap out the guide bushing.
SST 09201–70010

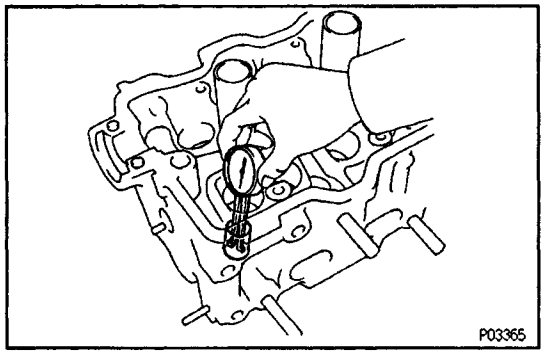

(d) Using a caliper gauge, measure the bushing bore diameter of the cylinder head.

Both intake and exhaust

Bushing bore diameter mm (in.)	Bushing size
11.000 – 11.027 (0.4331 – 0.4342)	Use STD
11.050 – 11.077 (0.4350 – 0.4361)	Use O/S 0.05

V00228

(e) Select a new guide bushing (STD or O/S 0.05).
If the bushing bore diameter of the cylinder head is greater than 11.027 mm (0.4341 in.), machine the bushing bore to the following dimension:
11.050 – 11.077 mm (0.4350 – 0.4361 in.)
If the bushing bore diameter of the cylinder head is greater than 11.077 mm (0.4361 in.), replace the cylinder head.

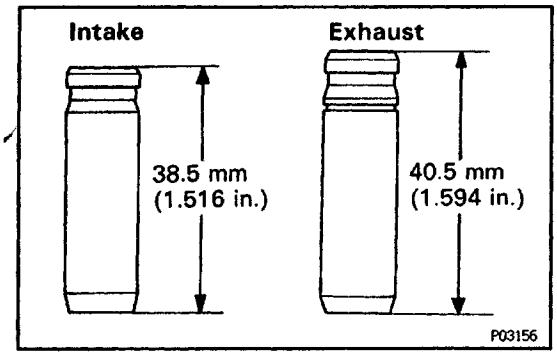

HINT: Different the bushings are used for the intake and exhaust.

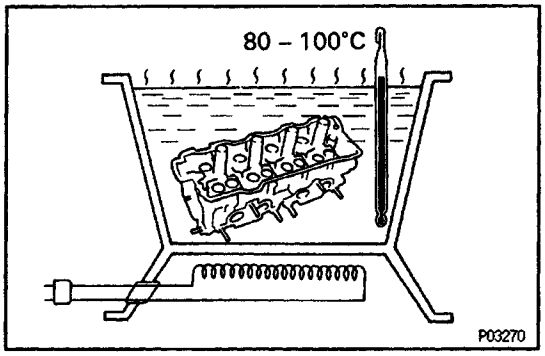

(f) Gradually heat the cylinder head to 80 – 100˚C (176 – 212”F).

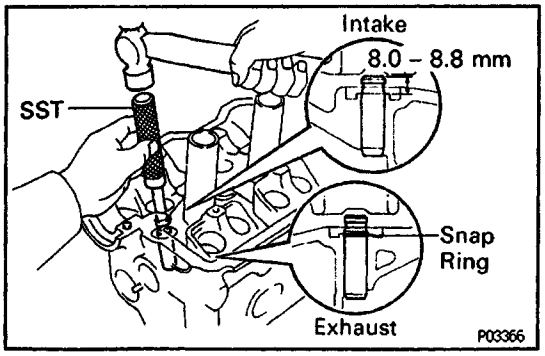

(g) (Intake)
Using SST and a hammer, tap in a new guide bushing until there is 8.0 – 8.8 mm (0.315 – 0.346 in.) protruding from the cylinder head.
SST 09201–70010
(h) (Exhaust)
Using SST and a hammer, tap in a new guide bushing until the snap ring makes contact with the cylinder head.
SST 09201–70010

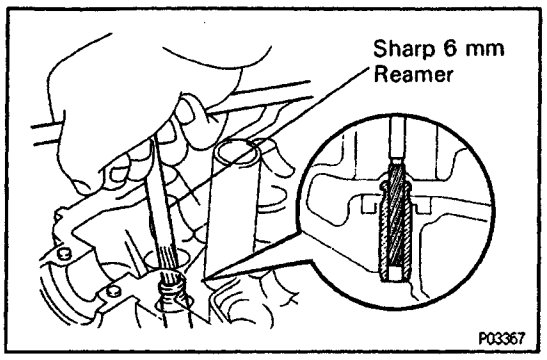

(I) Using a sharp 6 mm reamer, ream the guide bushing to obtain the standard specified clearance (See step 5 above) between the guide bushing and valve stem.

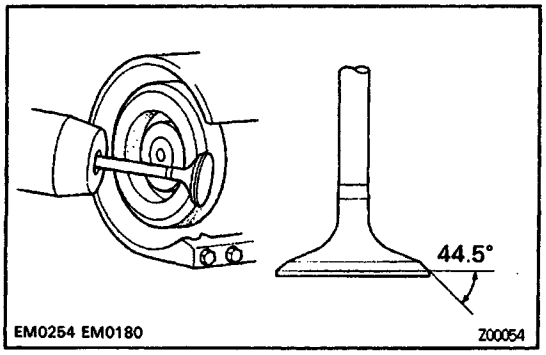

7. INSPECT AND GRIND VALVES
(a) Grind the valve enough to remove pits and carbon.
(b) Check that the valve is ground to the correct valve face angle.
Valve face angle:
44.5˚

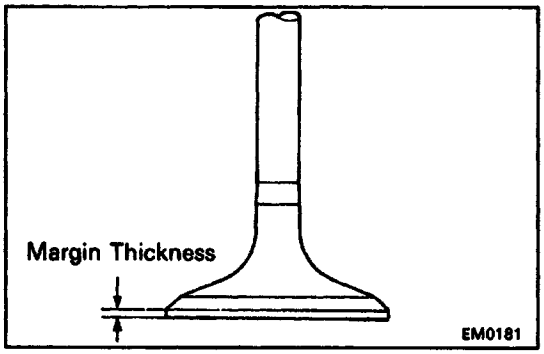

(c) Check the valve head margin thickness.
Standard margin thickness:
0.8 – 1.2 mm (0.031 – 0.047 in.)
Minimum margin thickness:
0.5 mm (0.020 in.)
If the margin thickness is less than minimum, replace the valve.

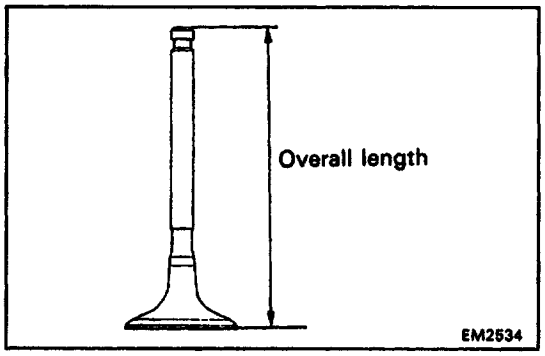

(d) Check the valve overall length.
Standard overall length:
Intake
97.60 mm (3.8425 in.)
Exhaust
98.45 mm (3.8760 in.)
Minimum overall length:
Intake
97.1 mm (3.823 in.)
Exhaust
98.0 mm (3.858 in.)
If the overall length is less than minimum, replace the valve.

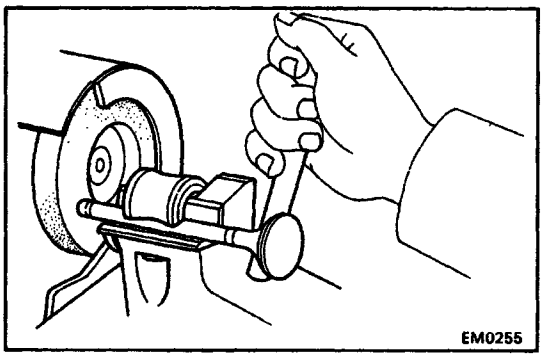

(e) Check the surface of the valve stem tip for wear.
If the valve stem tip is worn, resurface the tip with a grinder or replace the valve.
NOTICE: Do not grind off more then minimum.

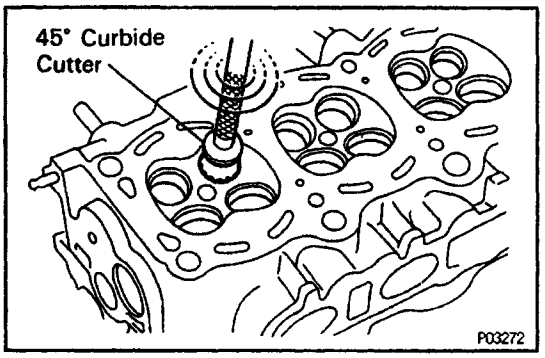

8. INSPECT AND CLEAN VALVE SEATS
(a) Using a 45˚ carbide cutter, resurface the valve seats. Remove only enough metal to clean the seats.

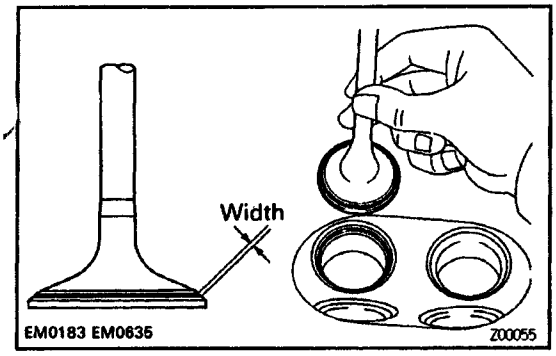

(b) Check the valve seating position.
Apply a light coat of prussian blue (or white lead) to the valve face. Lightly press the valve against the seat. Do not rotate valve.
(c) Check the valve face and seat for the following:

- If blue appears 360˚ around the face, the valve is concentric. If not, replace the valve.
- If blue appears 360˚ around the valve seat, the guide and face are concentric. If not, resurface the seat.
- Check that the seat contact is in the middle of the! valve face with the following width:
  1.0 – 1.4 mm (0.039 – 0.055 in.)
  If not, correct the valve seats as follows:

(1) If the seating is too high on the valve face, use 30˚ and 45˚ cutters to correct the seat.

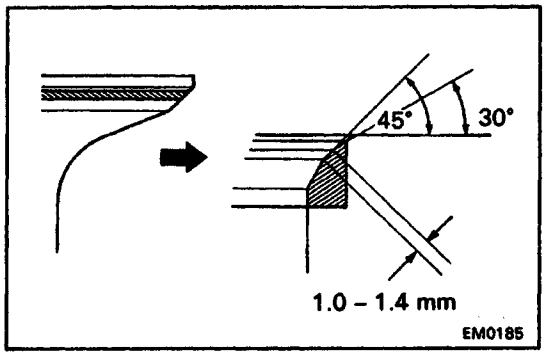

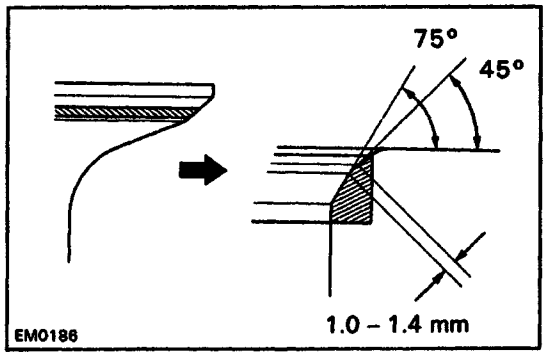

(2) If the seating is too low on the valve face, use 75˚ and 45˚ cutters to correct the seat.

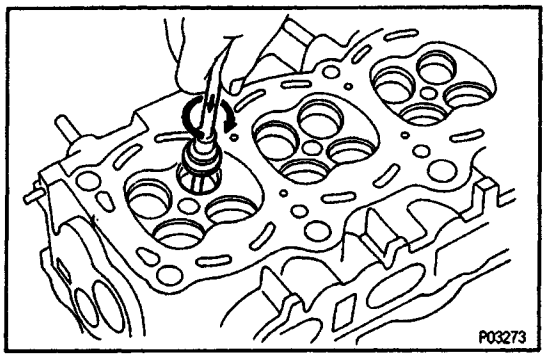

(d) Hand–lap the valve and valve seat with an abrasive compound.
(e) After hand–lapping, clean the valve and valve seat.

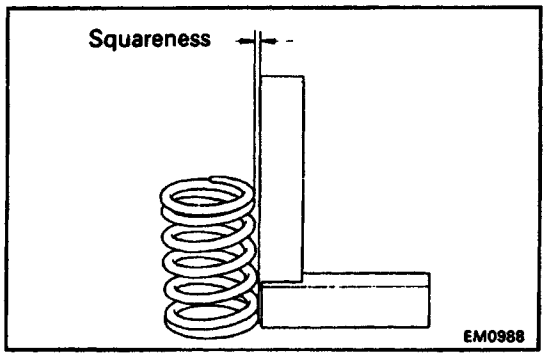

9. INSPECT VALVE SPRINGS
(a) Using a steel square, measure the squareness of the valve spring.
Maximum squareness:
2.0 mm (0.079 in.)
If the deviation is greater than maximum, replace the valve spring.

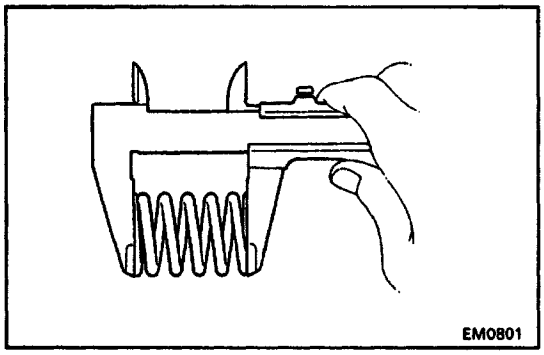

(b) Using a vernier caliper, measure the free length of the valve spring.

Free length:

41.9 mm (1.650 in.)

If the free length is not as specified, replace the valve spring.

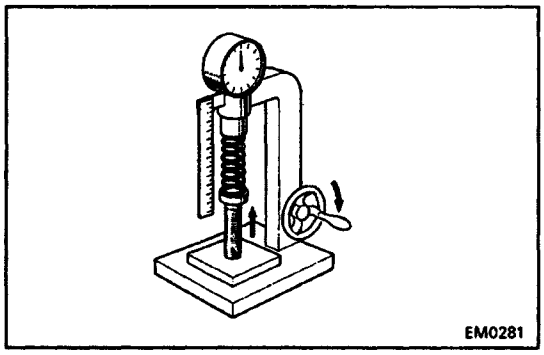

(c) Using a spring tester, measure the tension of the valve spring at the specified installed length.

Installed tension:

164 – 189 N (16.7 – 19.3 kgf, 36.8 – 42.5 lbf)
at 34.7 mm (1.366 in.)

If the installed tension is not as specified, replace the valve spring.

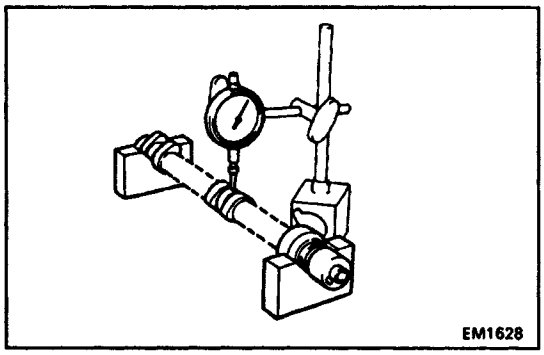

10. INSPECT CAMSHAFTS AND BEARINGS

A. Inspect camshaft for runout

(a) Place the camshaft on V–blocks.

(b) Using a dial indicator, measure the circle runout at the center journal.

Maximum circle runout:

0.04 mm (0.0016 in.)

If the circle runout is greater than maximum, replace the camshaft.

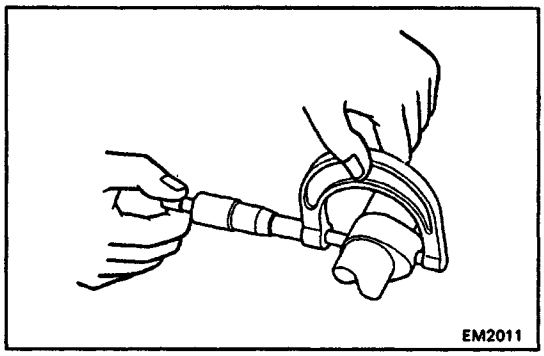

6. Inspect cam lobes

Using a micrometer, measure the cam lobe height.

Standard cam lobe height:

Intake

42.01 – 42.11 mm (1.6539 – 1.6579 in.)

Exhaust

40.06 – 40.16 mm (1.5772 – 1.5811 in.)

Minimum cam lobe height:

Intake

41.90 mm (1.6496 in.)

Exhaust

39.95 mm (1.5728 in.)

If the cam lobe height is less than minimum, replace the camshaft.

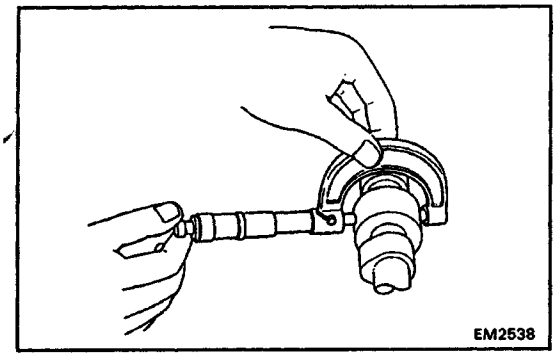

C. Inspect camshaft journals

Using a micrometer, measure the journal diameter.

Journal diameter:

26.959 – 26.975 mm (1.0614 – 1.0620 in.)

If the journal diameter is not as specified, check the oil clearance.

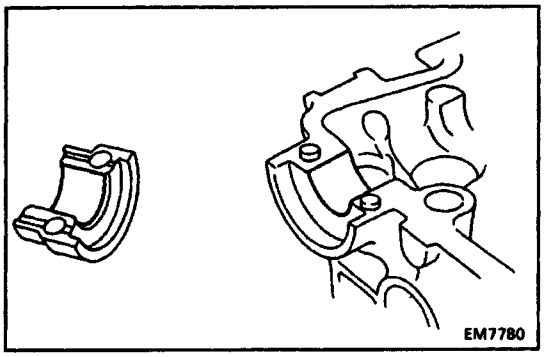

D. Inspect camshaft bearings

Check that bearings for flaking and scoring.

If the bearings are damaged, replace the bearing caps and cylinder head as a set.

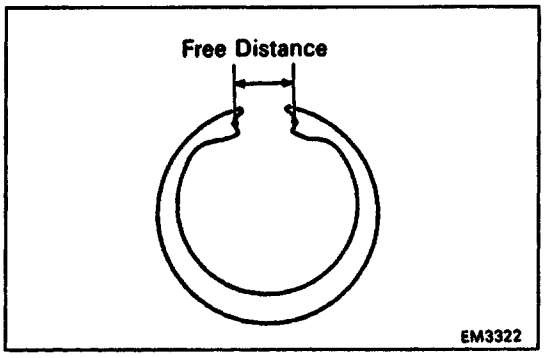

E. Inspect camshaft gear spring

Using a vernier caliper, measure the free distance between the spring ends.

Free distance:

22.5 – 22.9 mm (0.886 – 0.902 in.)

If the free distance is not as specified, replace the gear spring.

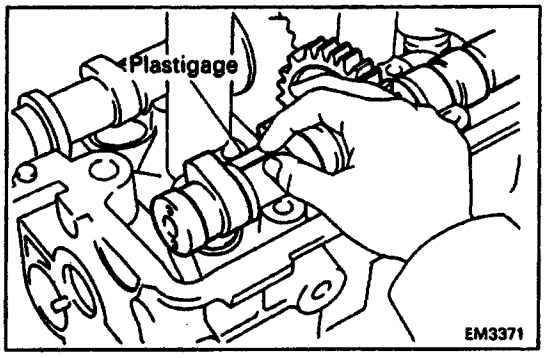

F. Inspect camshaft journal oil clearance

(a) Clean the bearing caps and camshaft journals.

(b) Place the camshafts on the cylinder head.

(c) Lay a strip of Plastigage across each of the camshaft journals.

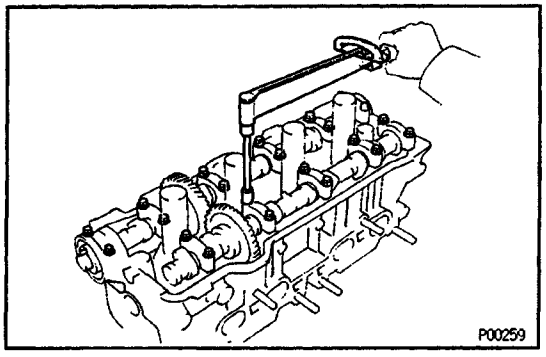

(d) Install the bearing caps.

(See step 4 in Cylinder Head Installation)

Torque: 19 N–m (190 kgf–cm, 14 ft–lbf)

NOTICE: Do not turn the camshaft.

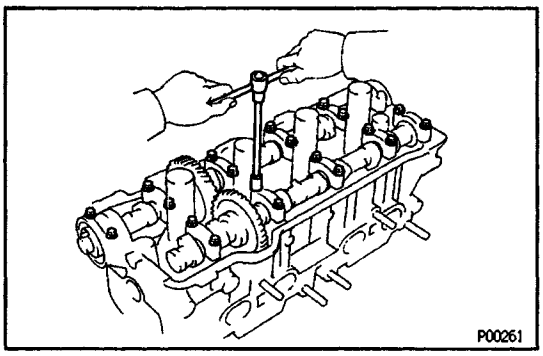

(e) Remove the bearing caps.

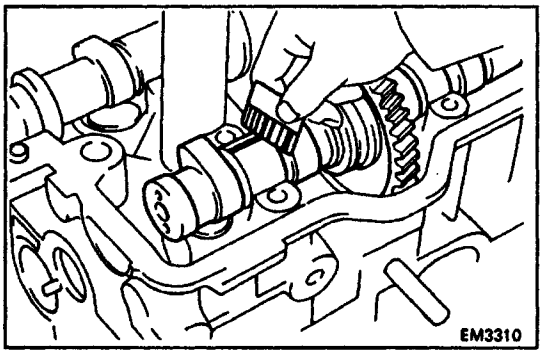

(f) Measure the Plastigage at its widest point.

Standard oil clearance:

0.025 – 0.062 mm (0.0010 – 0.0024 in.)

Maximum oil clearance:

0.10 mm (0.0039 in.)

If the oil clearance is greater than maximum, replace the camshaft. If necessary, replace the bearing caps and cylinder head as a set.

(g) Completely remove the Plastigage.

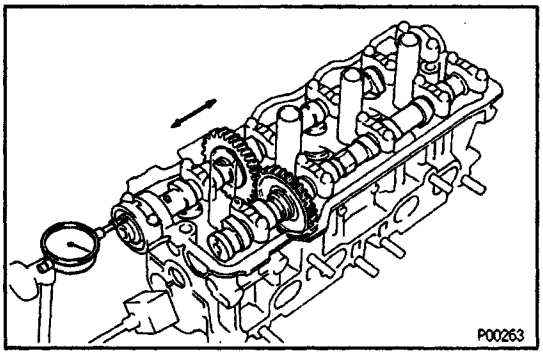

G. Inspect camshaft thrust clearance

(a) Install the camshaft.

(See step 4 in Cylinder Head Installation)

(b) Using a dial indicator, measure the thrust clearance while moving the camshaft back and forth.

Standard thrust clearance:

Intake

0.045 – 0.100 mm (0.0018 – 0.0039 in.)

Exhaust

0.030 – 0.085 mm (0.0012 – 0.0033 in.)

Maximum thrust clearance:

Intake

0.12 mm (0.0047 in.)

Exhaust

0.10 mm (0.0039 in.)

If the thrust clearance is greater than maximum, re–place the camshaft. If necessary, replace the bearing caps and cylinder head as a set.

H. Inspect camshaft gear backlash

(a) Install the camshafts without installing the exhaust cam sub–gear.

(See step 4 in Cylinder Head Installation)

(b) Using a dial indicator, measure the backlash.

Standard backlash:

0.020 – 0.200 mm (0.0008 – 0.0079 in.)

Maximum backlash:

0.30 mm (0.0188 in.)

If the backlash is greater then maximum, replace the camshafts.

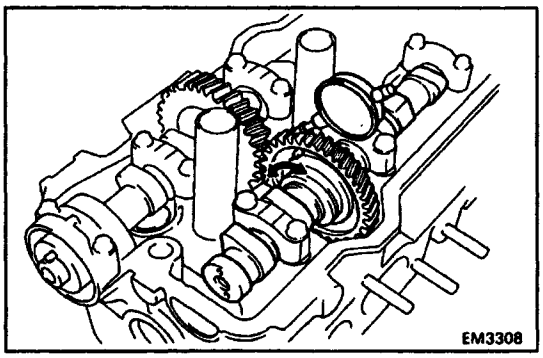

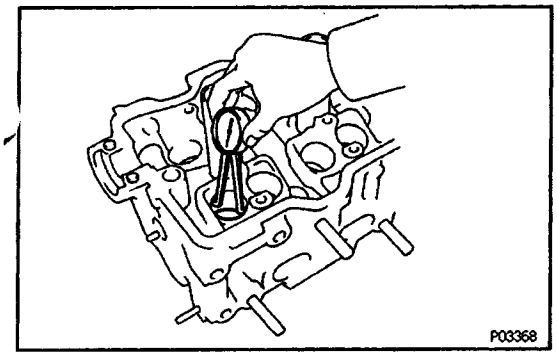

11. INSPECT VALVE LIFTERS AND LIFTER BORES

(a) Using a caliper gauge, measure the lifter bore diame–ter of the clinder head.

Lifter bore diameter:

31.000 – 31.018 mm (1.2205 – 1.2213 in.)

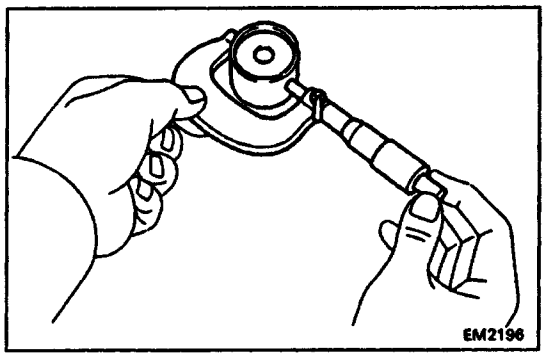

(b) Using a micrometer, measure the lifter diameter.

Lifter diameter:

30.966 – 30.976 mm (1.2191 – 1.2195 in.)

(c) Subtract the lifter diameter measurement from the lifter bore diameter measurement.

Standard oil clearance:

0.024 – 0.052 mm (0.0009 – 0.0020 in.)

Maximum oil clearance:

0.07 mm (0.0028 in.)

If the oil clearance is greater than maximum, replace the lifter. If necessary, replace the cylinder head.

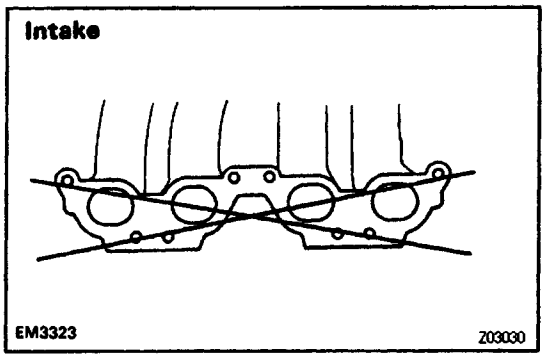

12. INSPECT MANIFOLDS

(Intake)

Using a precision straight edge and feeler gauge, measure the surface contacting the cylinder head for warpage.

Maximum warpage:

0.30 mm (0.0118 in.)

If warpage is greater than maximum, replace the manifold.

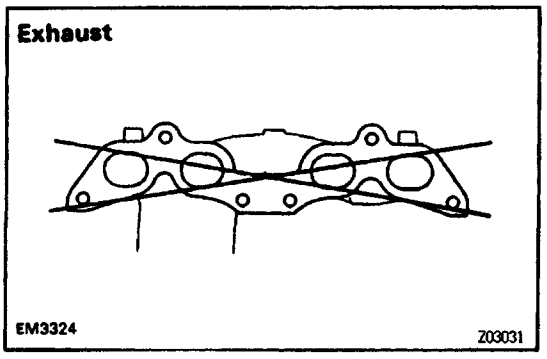

(Exhaust)

Using a precision straight edge and feeler gauge, measure the surface contacting the cylinder head for warpage.

Maximum warpage:

0.30 mm (0.0118 in.)

If warpage is greater than maximum, replace the manifold.

EG08P–02

CYLINDER HEAD ASSEMBLY

(See Components for Removal and Installation)

HINT:

- Thoroughly clean all parts to be assembled.
- Before installing the parts, apply new engine oil to all sliding and rotating surfaces.
- Replace all gaskets and oil seals with new ones.

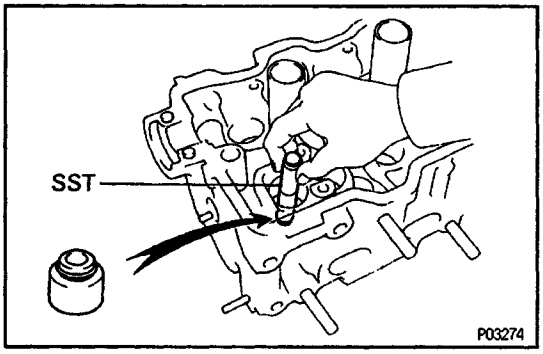

1. INSTALL VALVES

(a) Using SST, push in a new oil seal.

SST 09201–41020

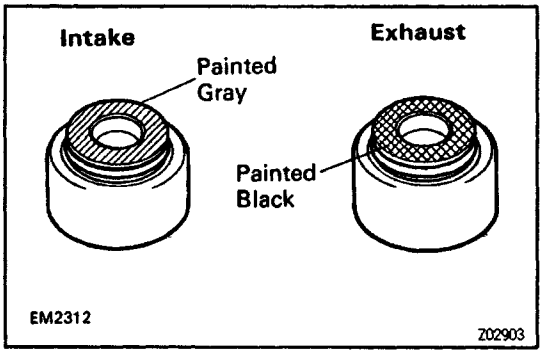

HINT: The intake valve oil seal is gray and the exhaust valve oil seal is black.

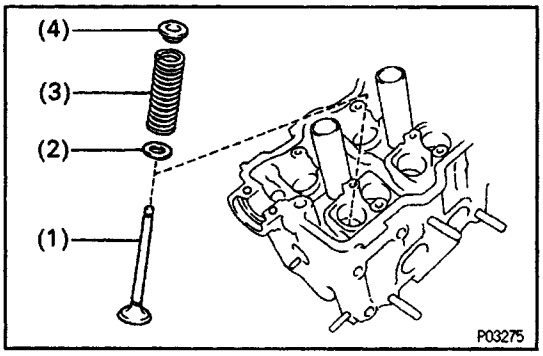

(b) Install the following parts:

(1) Valve
(2) Spring seat
(3) Valve spring
(4) Spring retainer

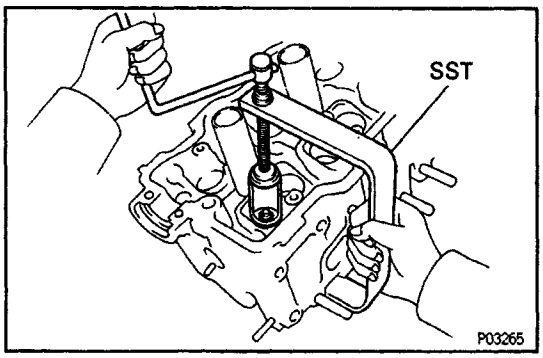

(c) Using SST, compress the valve spring and place the two keepers around the valve stem.

SST 09202–70010

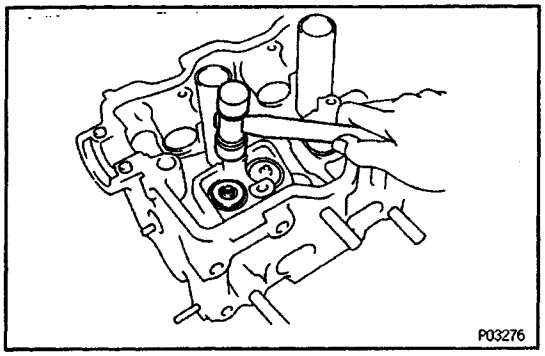

(d) Using a plastic–faced hammer, lightly tap the valve stem tip to assure proper fit.

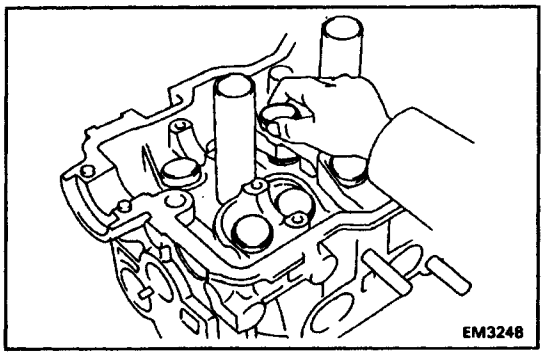

2. INSTALL VALVE LIFTERS AND SHIMS

(a) Install the valve lifter and shim.

(b) Check that the valve lifter rotates smoothly by hand.

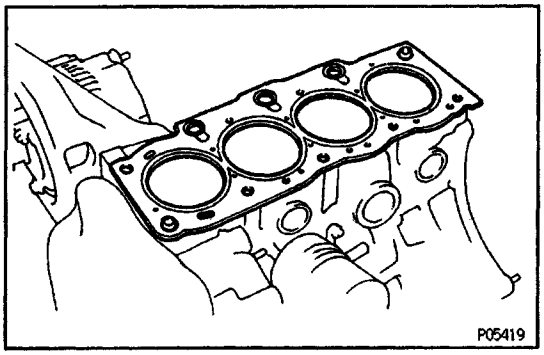

CYLINDER HEAD INSTALLATION

(See Components for Removal and Installation)

1. INSTALL CYLINDER HEAD

A. Place cylinder head on cylinder block

(a) Place a new cylinder head gasket in position on the cylinder block.

NOTICE: Be careful of the installation direction.

(b) Place the cylinder head in position on the cylinder head gasket.

B. Install cylinder head bolts

HINT:

- The cylinder head bolts are tightened in two progressive steps (steps (b) and (d)).
- If any cylinder head bolt is broken or deformed, replace it.

(a) Apply a light coat of engine oil on the threads and under the heads of the cylinder head bolts.

(b) Install and uniformly tighten the ten cylinder head bolts and plate washers in several passes, in the se–quence shown.

Torque: 49 N–m (500 kgf–cm, 36 ft–lbf)

If any one of the cylinder head bolts does not meet the torque specification, replace the cylinder head bolt.

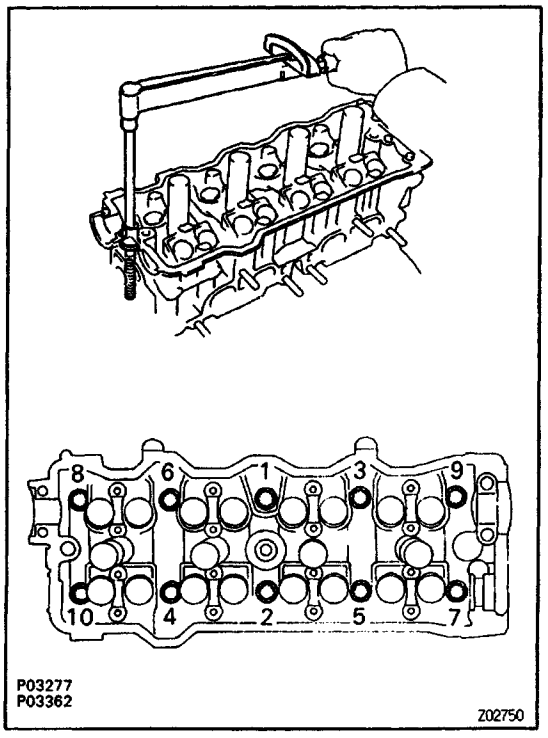

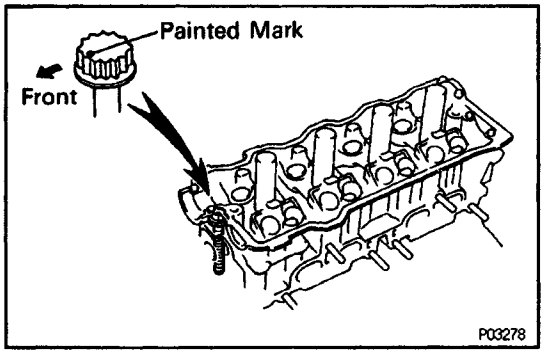

(c) Mark the front of the cylinder head bolt head with paint.

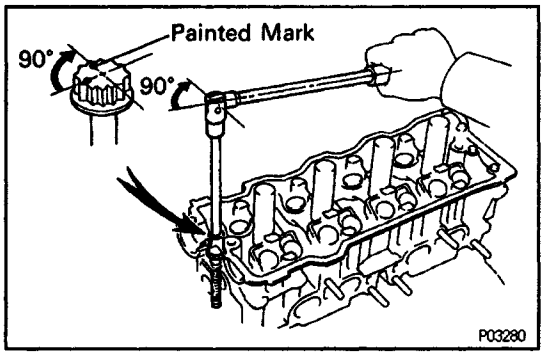

(d) Retighten the cylinder head bolts 90° in the numerical order shown.
(e) Check that the painted mark is now at a 90° angle to front.

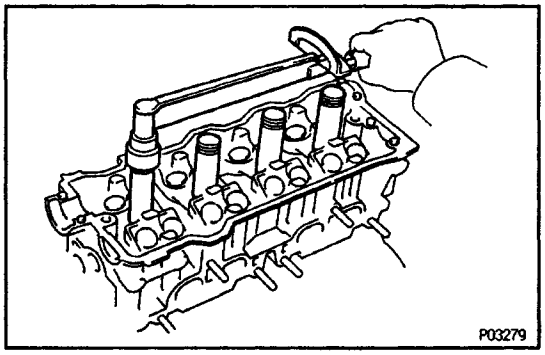

2. INSTALL SPARK PLUG TUBES
(a) Clean the cylinder head tube holes of any residual adhesive, oil or foreign particles. Remove any oil with kerosene or gasoline.
(b) Screw the threads of the spark plug tube coated with adhesive into the cylinder head.
(c) Using the spark plug tube nut and a 30 mm socket wrench, tighten the spark plug tubes.
Torque: 39 N–m (400 kgf–cm, 29 ft–lbf)

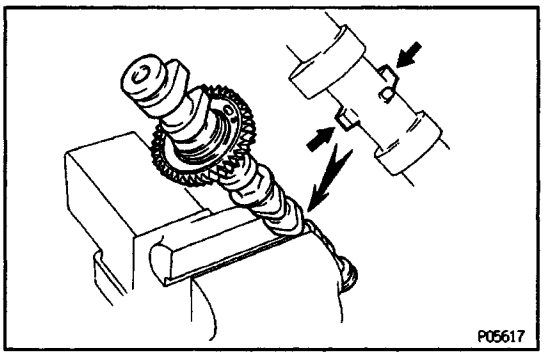

3. ASSEMBLY EXHAUST CAMSHAFT
(a) Mount the hexagon wrench head portion of the camshaft in a vise.
NOTICE: Be careful not to damage the camshaft.

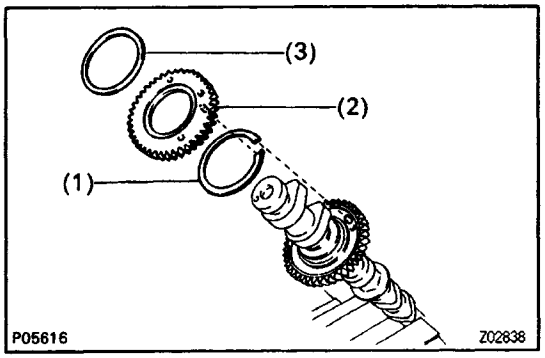

(b) Install the following parts:
(1) Camshaft gear spring
(2) Camshaft sub–gear
(3) Wave washer
HINT: Align the pins on the gears with the spring ends.

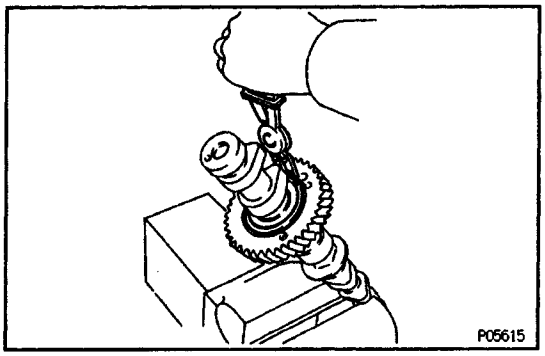

(c) Using snap ring pliers, install the snap ring.

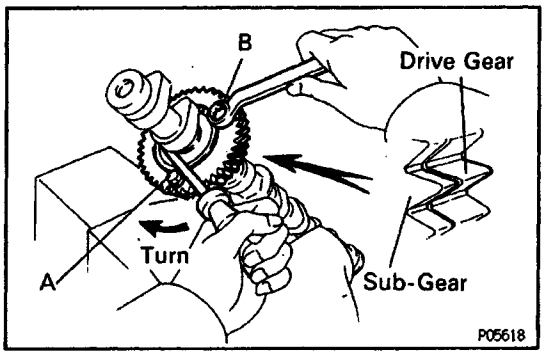

(d) Insert service bolt A into the service hole of the camshaft sub–gear.
(e) Using a screwdriver, align the holes of the camshaft drive gear and sub–gear by turning camshaft sub–gear clockwise, and install service bolt B.
NOTICE: Be careful not to damage the camshaft.
(f) Align the gear teeth of the drive gear and sub–gear, and tighten service bolt B.

4. INSTALL CAMSHAFTS
NOTICE: Since the thrust clearance of the camshaft is small, the camshaft must be kept level while it is being installed. If the camshaft is not kept level, the portion of the cylinder head receiving the shaft thrust may crack or be damaged, causing the camshaft to seize or break. To avoid this, the following steps should be carried out.

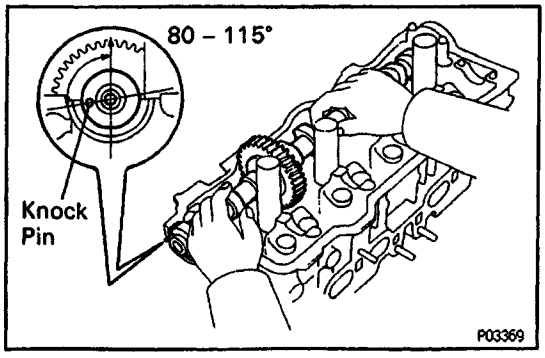

A. Install intake camshaft
(a) Apply Mp grease to the thrust portion of the cam–shaft.
(b) Place the intake camshaft at 80 – 115° BTDC of camshaft angle on the cylinder head.
HINT: The above angle arrows the No.1 and No.3 cylinder cam lobes of the intake camshaft to push their valve lifters evenly.

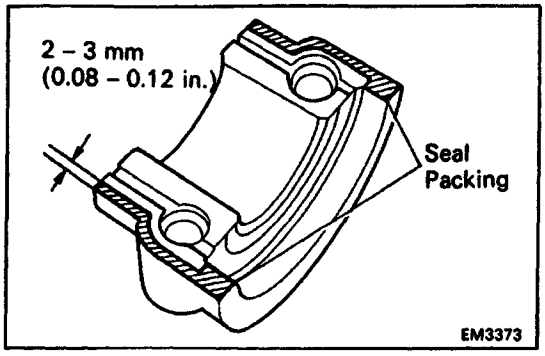

(c) Apply seal packing to the No.1 bearing cap as shown.
Seal packing:
Part No. 08826–00080 or equivalent

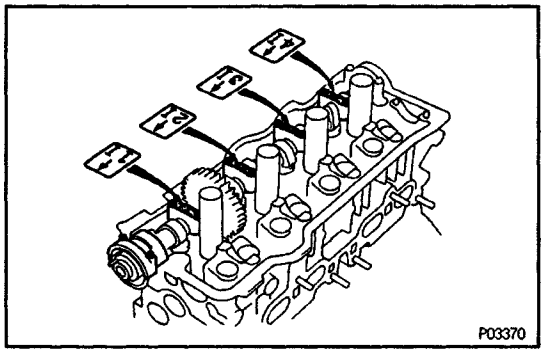

(d) Install the bearing caps in their proper locations.

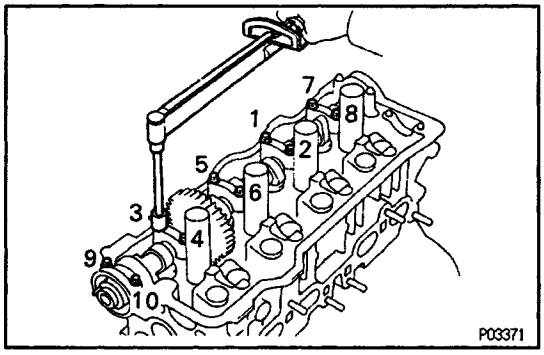

(e) Apply a light coat of engine oil on the threads and under the heads of the bearing cap bolts.
(f) Install and uniformly tighten the ten bearing cap bolts in several passes, in the sequence shown.
Torque: 19 N–m (190 kgf–cm, 14 ft–lbf)

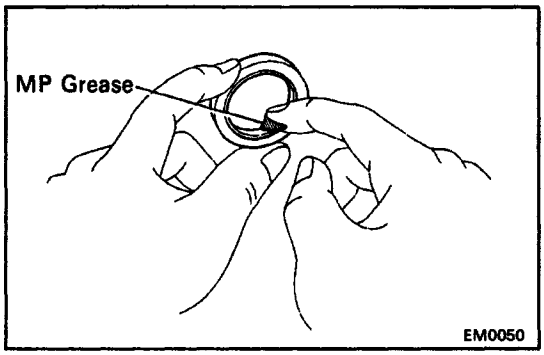

(g) Apply IMP grease to a new oil seal lip.

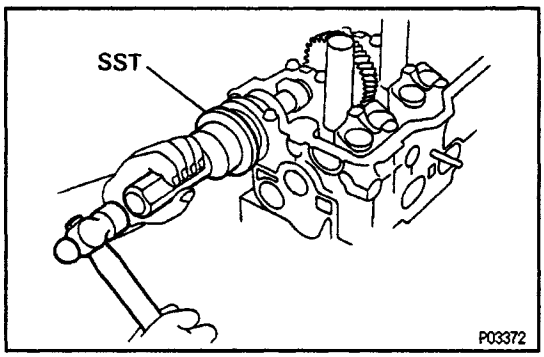

(h) Using SST, tap in the oil seal.
SST 09223–46011

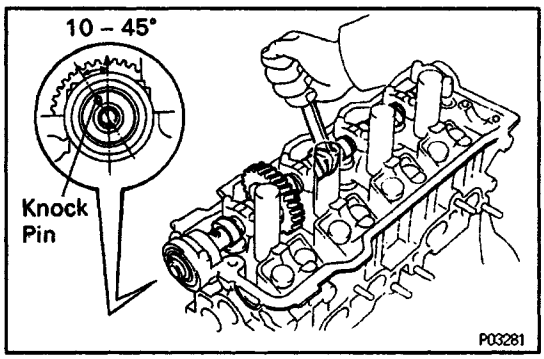

B. Install exhaust camshaft
(a) Set the knock pin of the intake camshaft at 10 – 45° BTDC of camshaft angle.
HINT: The above angle allows the No.2 and No.4 cylinder cam lobes of the exhaust camshaft to push their valve liters evenly.

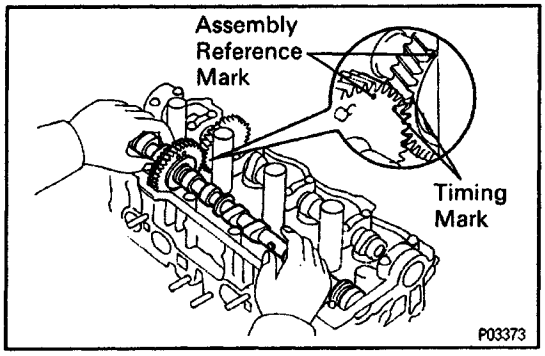

(b) Apply MP grease to the thrust portion of the cam–shaft.
(c) Engage the exhaust camshaft gear to the intake camshaft gear by matching the timing marks on each gear.
(d) Roll down the exhaust camshaft onto the bearing journals while engaging gears with each other.

NOTICE: There are also assembly reference marks on each gear as shown in the illustration. Do not use these marks.

(e) Turn the intake camshaft clockwise or counterclock–wise little until the exhaust camshaft sits in the bea–ring journals evenly without rocking the camshaft on the bearing journals.

NOTICE: It is very important to replace the camshaft in the bearing journals evenly while tightening bear-ing caps in the subsequent steps.

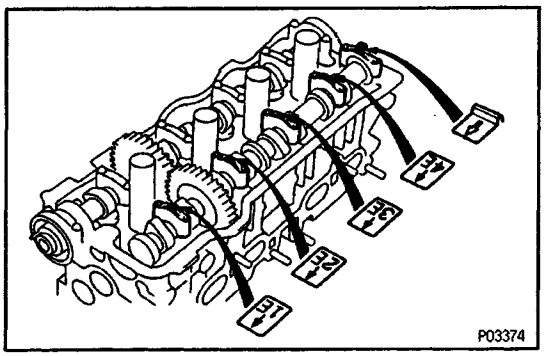

(f) Install the bearing caps in their proper locations.

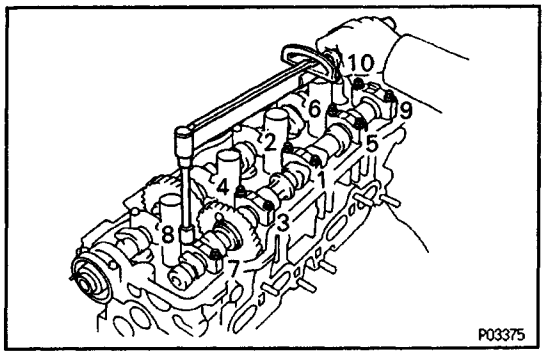

(g) Apply a light coat of engine oil on the threads and under the heads of the bearing cap bolts.
(h) Install and uniformly tighten the ten bearing cap bolts in several passes, in the sequence shown.

Torque: 19 N–m (190 kgf–cm. 14 ft–lbf)

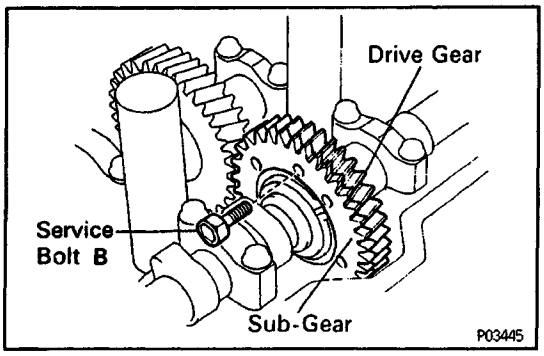

(i) Remove service bolt B.

5. CHECK AND ADJUST VALVE CLEARANCE

(See Tune–Up)

Turn the camshaft and position the cam lobe upward, and check and adjust the valve clearance.

Valve clearance (Cold):

Intake

0.19 – 0.29 mm (0.007 – 0.011 in.)

Exhaust

0.28 – 0.38 mm (0.011 – 0.015 in.)

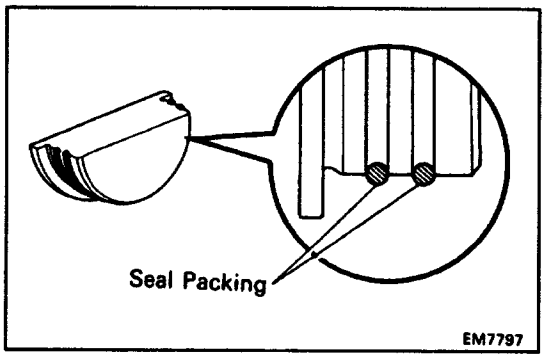

6. INSTALL SEMI–CIRCULAR PLUGS

(a) Remove any old packing (FIPG) material.

(b) Apply seal packing to the semi–circular plug grooves.

Seal packing:

Part No. 08826–00080 or equivalent

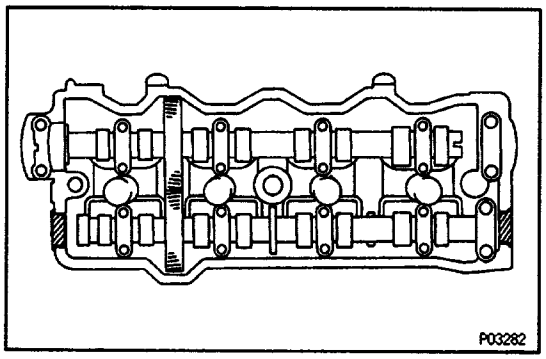

(c) Install the two semi–circular plugs to the cylinder head.

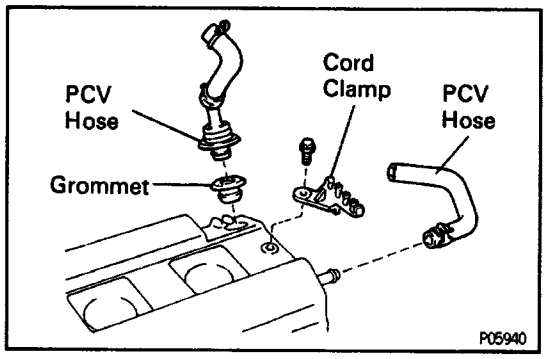

7. INSTALL PCV VALVE, PCV HOSE AND HIGH–TENSION CORD CLAMP

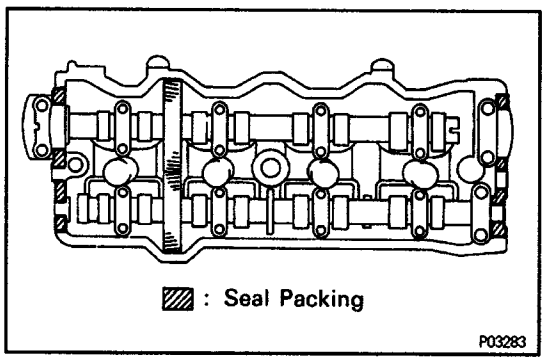

8. INSTALL CYLINDER HEAD COVER

(a) Remove any old packing (FIPG) material.

(b) Apply seal packing to the cylinder head as shown in the illustration.

Seal packing:

Pert No. 08826–00080 or equivalent

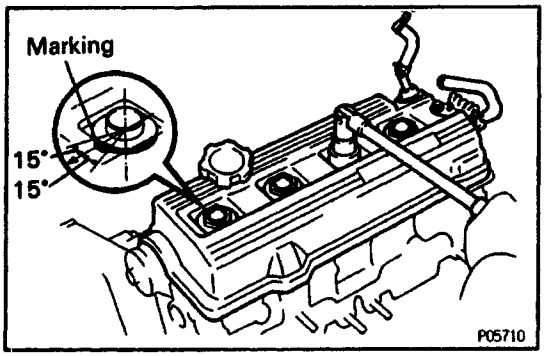

(c) Install the gasket to the head cover.
(d) install the head cover with the four grommets and nuts. Uniformly tighten the nuts in several passes.
Torque: 23 N–m (230 kgf–cm, 17 ft–lbf)

HINT: Install the grommets so that their markings are as shown in the illustration.

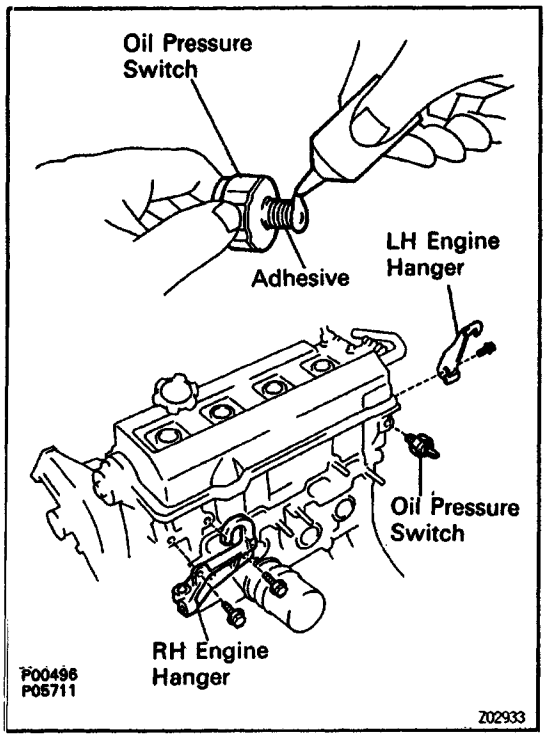

9. INSTALL OIL PRESSURE SWITCH

Apply adhesive to two or three threads.

Adhesive:

Part No. 08833–00080. THREE BOND 1324 or equivalent

10. INSTALL ENGINE HANGERS

(a) Install the RH engine hanger with the two bolts.
Torque: 25 N–m (250 kgf–cm, 18 ft–lbf)
(b) Install the LH engine hanger with the bolt.
Torque: 25 N–m (250 kgf–cm, 18 ft–lbf)

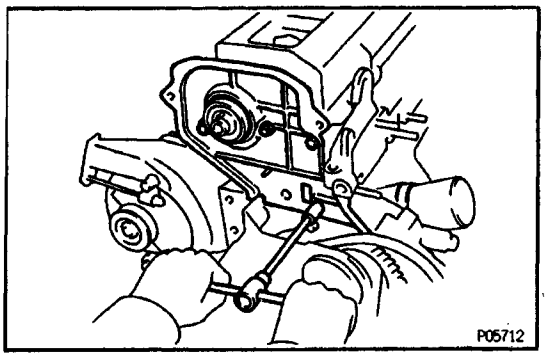

11. INSTALL NO.3 TIMING BELT COVER

install the timing belt cover with the four bolts.
Torque: 7.8 N–m (80 kgf–cm, 69 in.–lbf)

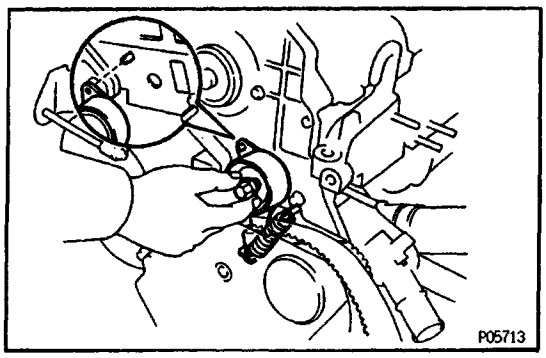

12. TEMPORARILY INSTALL NO.1 IDLER PULLEY AND TENSION SPRING

(a) Align the bracket pin hole with the pivot pin.
(b) Install the pulley with the bolt. Do not tighten the bolt yet.
(c) Install the tension spring.

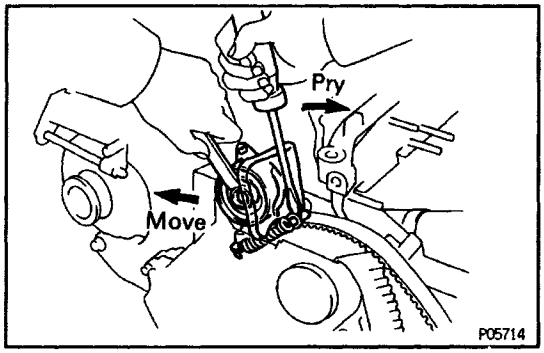

(d) Pry the pulley toward the left as far as it will go and tighten the bolt.
(e) Check that the idler pulley moves smoothly.

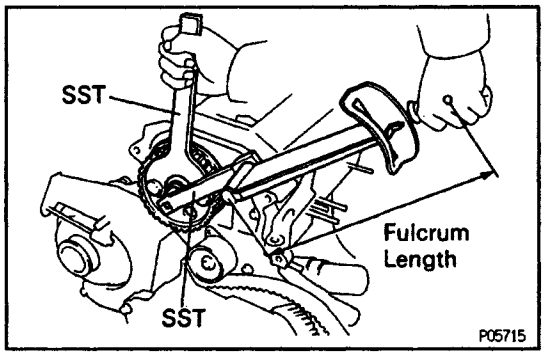

13. INSTALL CAMSHAFT TIMING PULLEY

(a) Align the camshaft knock pin with the knock pin groove of the pulley, and slide on the timing pulley.
(b) Using SST, install the pulley bolt.
SST 09249–63010,09278–54012

Torque:
54 N–m (550 kgf–cm, 40 ft–lbf)
37 N–m (380 kgf–cm, 27 ft–lbf) for SST

HINT: Use a torque wrench with a fulcrum length of 340 mm (13.39 in.)

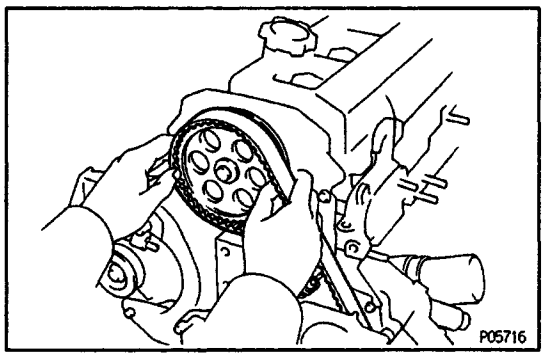

14. CONNECT TIMING BELT TO CAMSHAFT TIMING PULLEY

(See steps 10 to 22 in Timing Belt Installation)

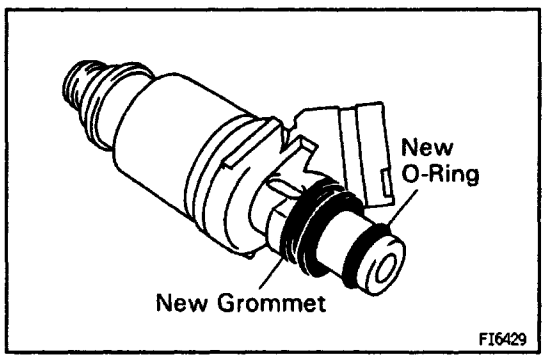

15. INSTALL INJECTORS AND DELIVERY PIPE

(a) Install a new grommet to the injector.
(b) Apply a light coat of gasoline to a new O–ring and install it to the injector.

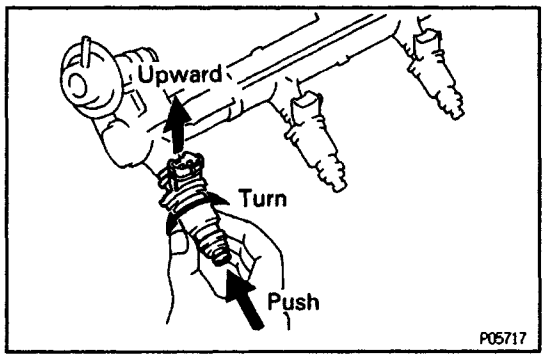

(c) While turning the injector left and right, install it to the delivery pipes. Install the four injectors.
(d) Position the injector connector upward.

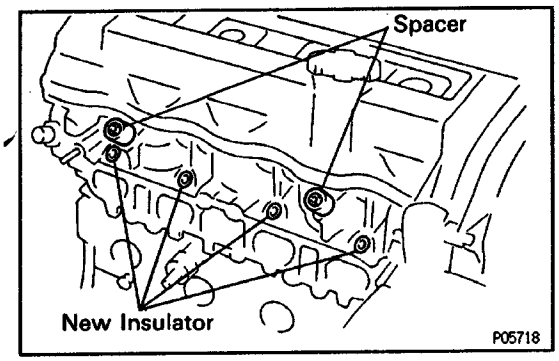

(e) Place four new insulators and the two spacers in position on the cylinder head.

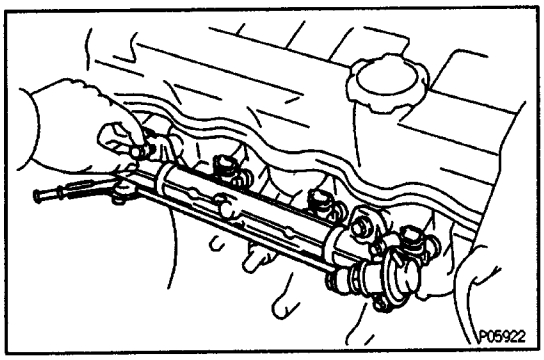

(f) Place the four injectors together with the delivery pipe in position on the cylinder head.
(g) Temporarily install the two bolts holding the delivery pipe to the cylinder head.

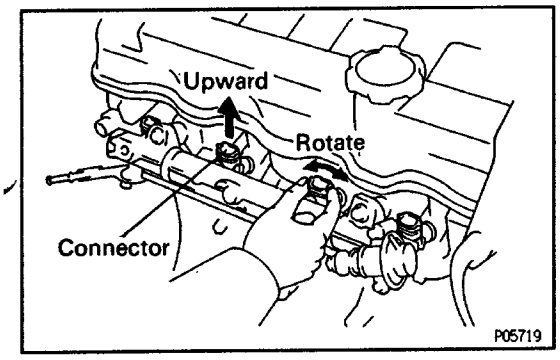

(h) Check that the injectors rotate smoothly.

HINT: If injectors do not rotate smoothly, the probable cause is incorrect installation of 0– rings. Replace the O–rings.

(i) Position the injector connector upward.

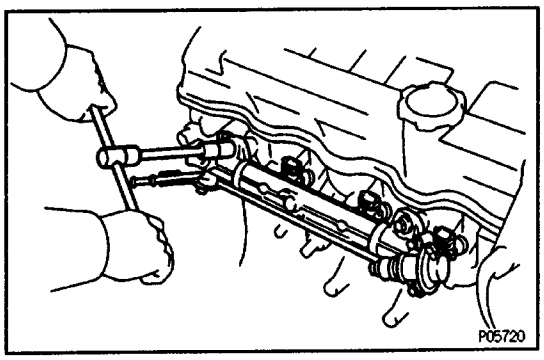

(j) Tighten the two bolts holding the delivery pipe to the cylinder head.
Torque: 13 N–m (130 kgf–cm. 9 ft–lbf)

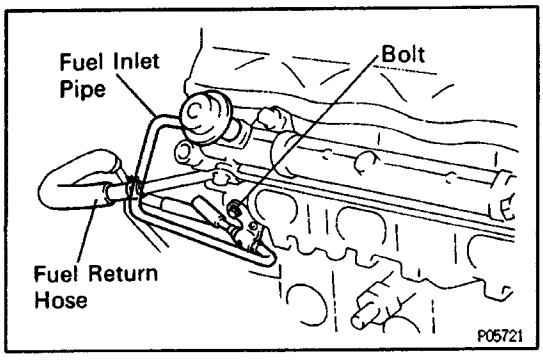

(k) Connect the fuel inlet pipe to the delivery pipe with two new gaskets and the pulsation damper.
Torque: 34 N–m (350 kgf–cm, 25 ft–lbf)
(l) Install the fuel inlet pipe to the cylinder head with the bolt.
(m) Connect the fuel return hose.

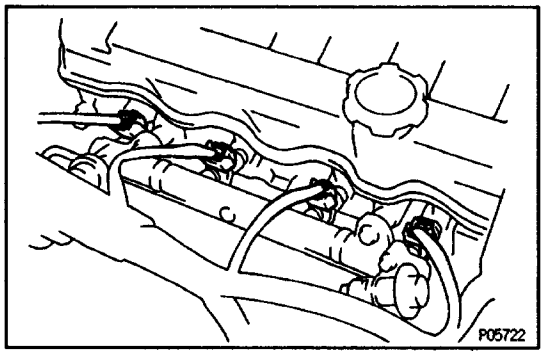

(n) Connect the four injector connectors.

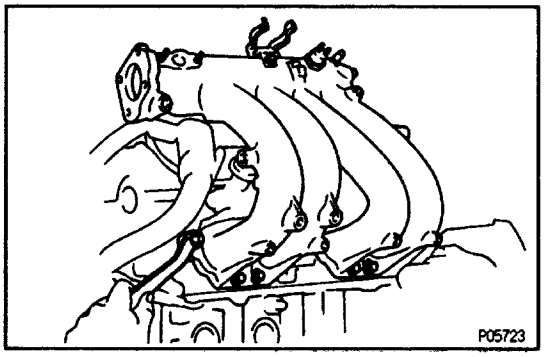

16. INSTALL INTAKE MANIFOLD

(a) Install a new gasket and the intake manifold with the six bolts and two nuts. Uniformly tighten the bolts and nuts in several passes.

Torque: 19 N–m (195 kgf–cm, 14 ft–lbf)

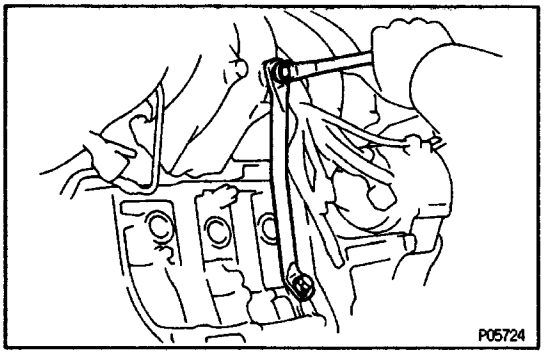

(b) Install the intake manifold stay with the two bolts.

Torque:

22 N–m (220 kgf–cm, 16 ft–lbf) for 12 mm head

42 N–m (425 kgf–cm. 31 ft–lbf) for 14 mm head

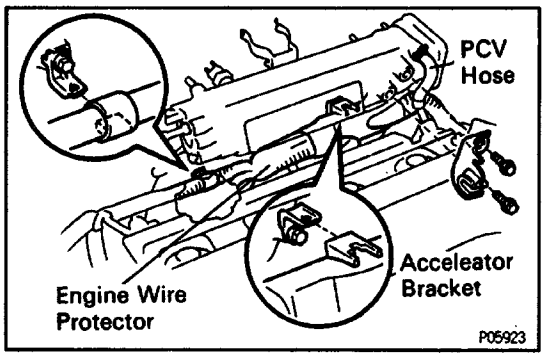

(c) Connect the the engine wire protector to the brackets on the front side of the intake manifold.

(d) Connect the PCV hose to the intake manifold.

(e) Install the accelerator bracket with the two bolts.

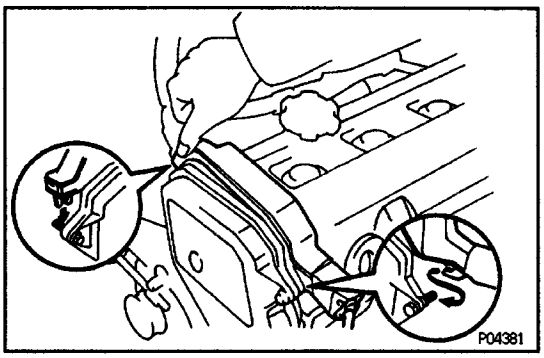

(f) Install the two clamps of the engine wire protector to each bolt.

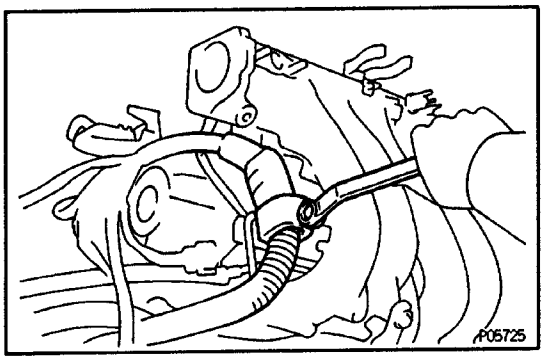

(g) Install the engine wire protector with the bolt.

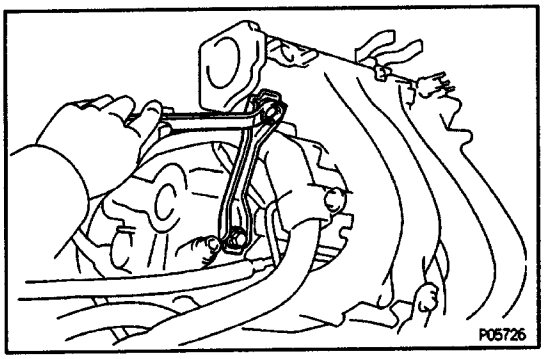

(h) Install the air intake chamber stay with the two bolts.
Torque: 42 N–m (425 kgf–cm, 31 ft–lbf)

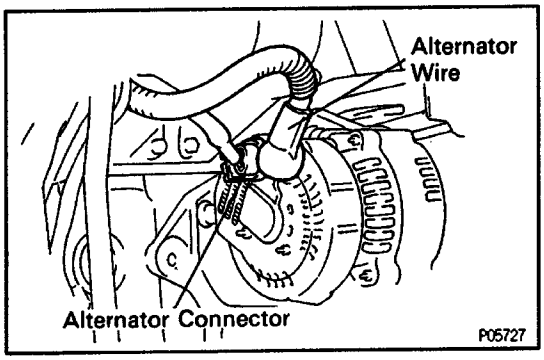

(i) Connect the alternator connector and wire.

17. INSTALL VSV FOR EGR

(a) Install the VSV with the bolt.
(b) Connect the VSV connector.

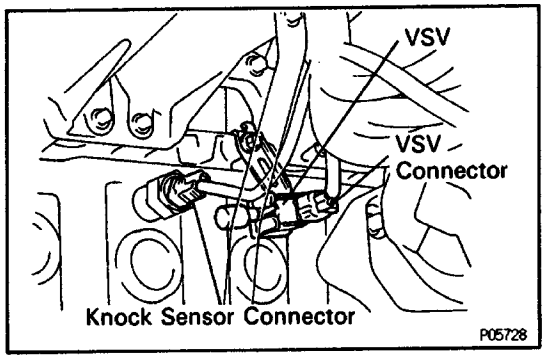

18. CONNECT KNOCK SENSOR CONNECTOR

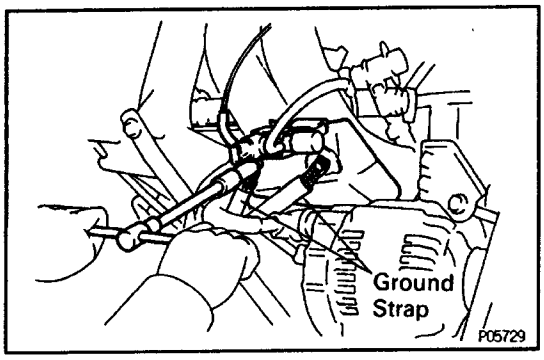

19. INSTALL VSV FOR FUEL PRESSURE

(a) Install the VSV with the two bolts. Connect the two ground straps.

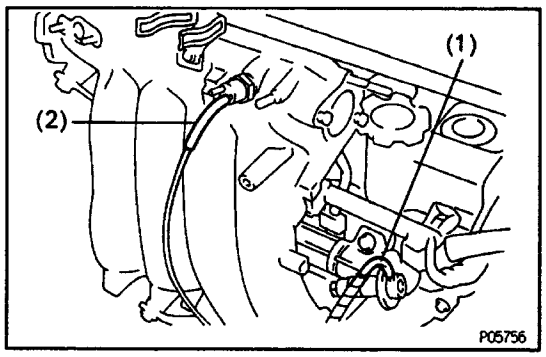

(b) Connect the following hoses:
(1) Vacuum hose (from port E of VSV) to fuel pres–sure regulator
(2) Vacuum hose (from port G of VSV) to gas filter.
(c) Connect the VSV connector:

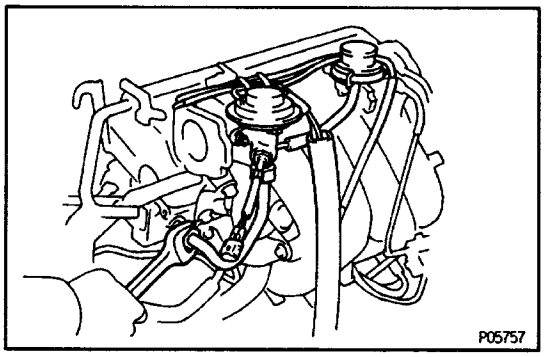

20. INSTALL EGR VALVE AND VACUUM MODULATOR
(a) Install a new gasket and the EGR valve with the union nut and two nuts.
Torque:
13 N–m (130 kgf–cm, 9 ft–lbf) for nut
59 N–m (600 kgf–cm, 43 ft–lbf) for union nut
(b) Install the vacuum modulator to the clamp.
(c) (CALIF. only)
Connect the EGR function sensor connector.

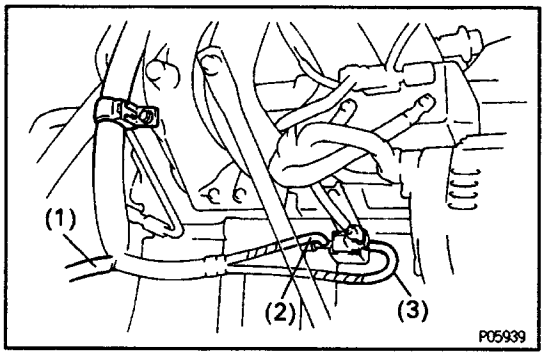

(d) Install the vacuum hose clamp to the intake manifold with the bolt.
(e) Connect the following hoses:
(1) Vacuum hose to charcoal canister
(2) Vacuum hose (from EGR valve) to port E of VSV (for EGR)
(3) Vacuum hose (from port ”a” of EGR vacuum modulator) to port G of VSV (for EGR)

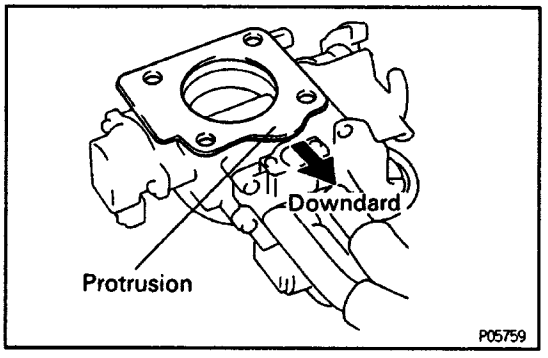

21. INSTALL THROTTLE BODY
(a) Place a new gasket on the throttle body, facing the protrusion downward.

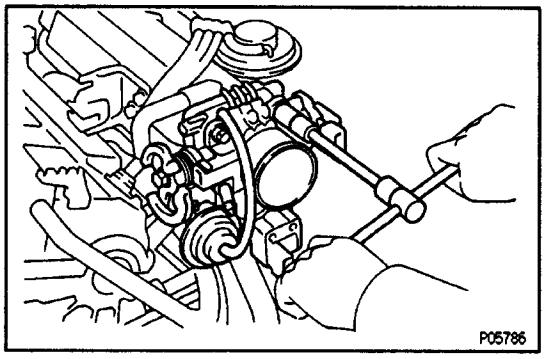

(b) Install the throttle body with the four bolts.
Torque: 19 N–m (195 kgf–cm. 14 ft–lbf)
HINT: Different the bolt lengths are used for upper side and lower side.
Bolt length:
45 mm (1.77 in.) for upper side
55 mm (2.17 in.) for lower side

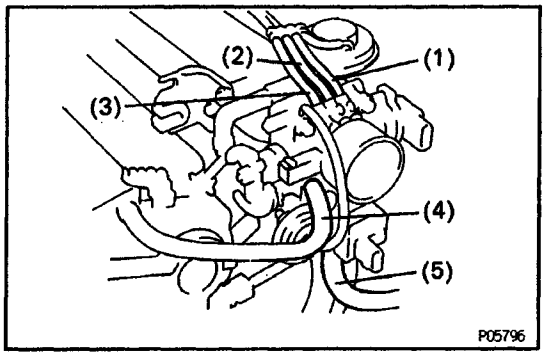

(c) Connect the following hoses:
(1) Vacuum hose (from upper port of TVS) to port ”P” of throttle body
(2) Vacuum hose (from port ”Q” of EGR vacuum modulator) to port ”E” of throttle body
(3) Vacuum hose (from port ”R” of EGR vacuum modulator) to port ”R” of throttle body
(4) PCV hose (from cylinder head) to throttle body
(5) Air hose (port F of A/C idle–up valve)

(d) Connect the following connectors:
Throttle position sensor connector.
IACV connector.

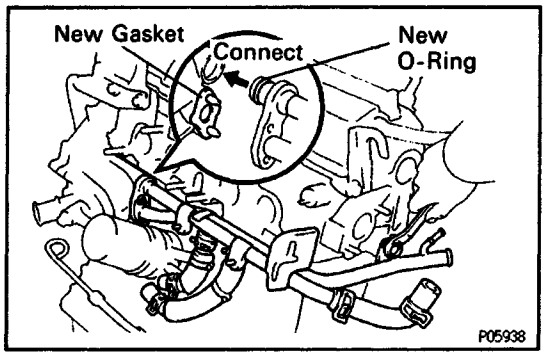

22. INSTALL WATER BY–PASS PIPE

(a) Install a new gasket to the water pump cover.
(b) Install a new O–ring to the by–pass pipe.
(c) Apply soapy water on the 0– ring.
(d) Install the by–pass pipe with the two nuts and two bolts.

Torque: 8.8N–m (90 kgf–cm, 78 in–lbf) for nut

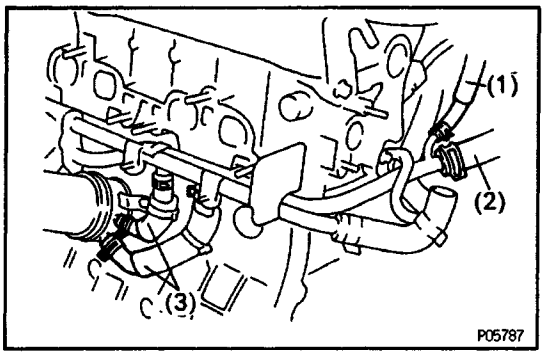

(e) Connect the following hoses:
(1) IACV water by–pass hose
(2) Heater water hose
(3) Two oil cooler water by–pass hoses

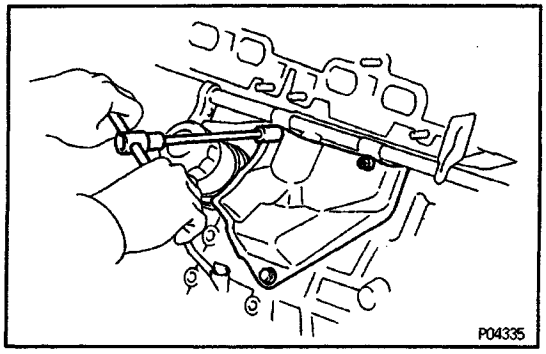

(f) Install the oil cooler heat protector with the two nuts and bolt.

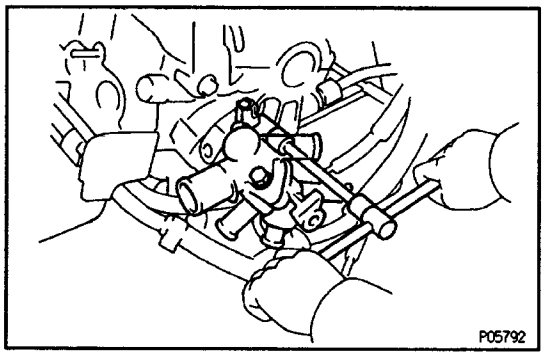

23. INSTALL WATER OUTLET AND HOUSING

(a) Install a new gasket, the water outlet and outlet housing with the two nuts.

Torque: 15 N–m (150 kgf–cm, 11 ft–lbf)

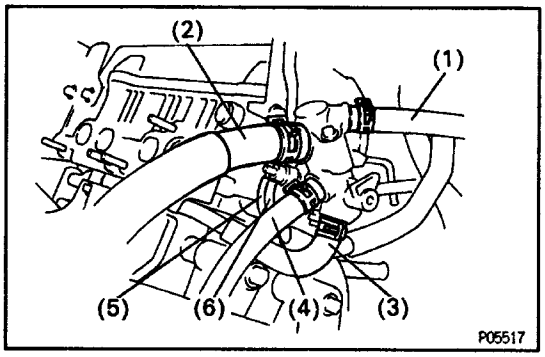

(b) Connect the following hoses:

(1) Water filler hose
(2) Radiator hose
(3) Water by–pass pipe hose
(4) Heater water hose
(5) Vacuum hose (from P port of throttle body) to upper port of TVS
(6) Vacuum hose (from charcoal canister) to lower port of TVS

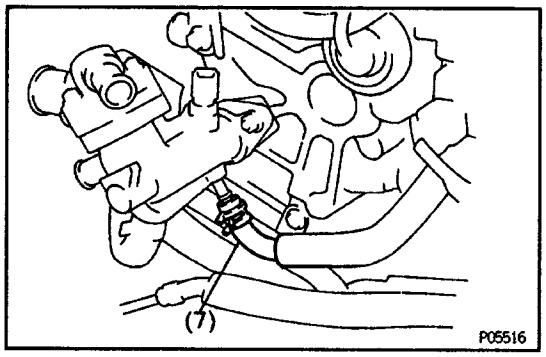

(7) IACV water by–pass hose

(c) Connect the following connectors:

- Water temperature sender gauge connector
- ECTS connector

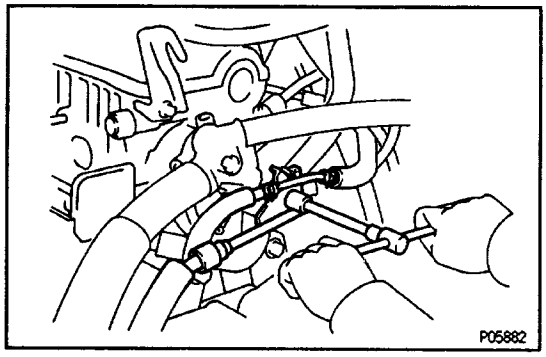

(d) Install the fuel inlet pipe (with fuel return tube) with the bolt.

24. CONNECT OIL PRESSURE SWITCH CONNECTOR

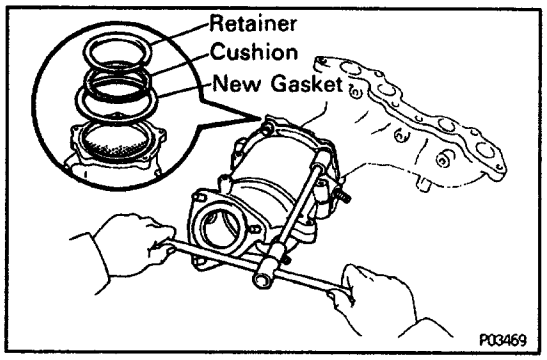

25. ASSEMBLE EXHAUST MANIFOLD AND TWC

(a) Place the cushion, retainer and a new gasket on the TWC.

(b) Install the TWC to the exhaust manifold with the three bolts and two nuts.

Torque: 29 N–m (300 kgf–cm, 22 ft–lbf)

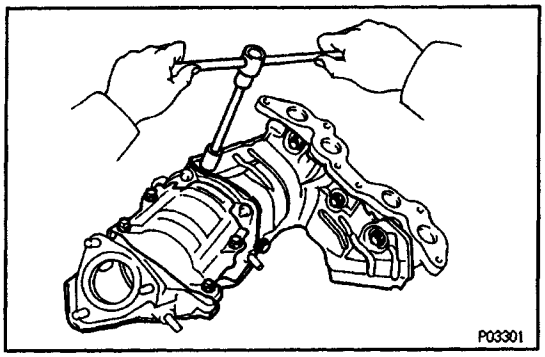

(c) Install the lower manifold heat insulator with the five bolts.
(d) Install the two TWC heat insulator with the eight bolts.

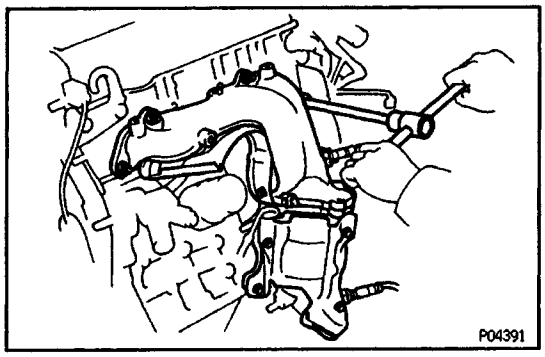

26. INSTALL EXHAUST MANIFOLD AND TWC ASSEMBLY

(a) Install a new gasket, the exhaust manifold and TWC assembly with the six nuts. Uniformly tighten the nuts in several passes.

Torque: 49 N–m (500 kgf–cm, 36 ft–lbf)

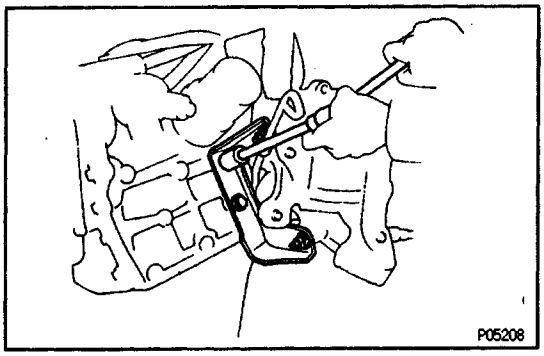

(b) Install the TWC stay with the two bolts and two nuts.

Torque: 42 N–m (425 kgf–cm, 31 ft–lbf)

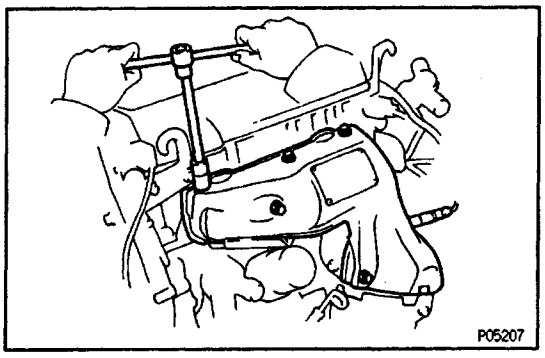

(c) Install the upper manifold heat insulator with the six bolts.
(d) Connect the following connectors:

- Oxygen sensor (main) connector
- (CALIF. only)
- Sub–oxygen sensor connector

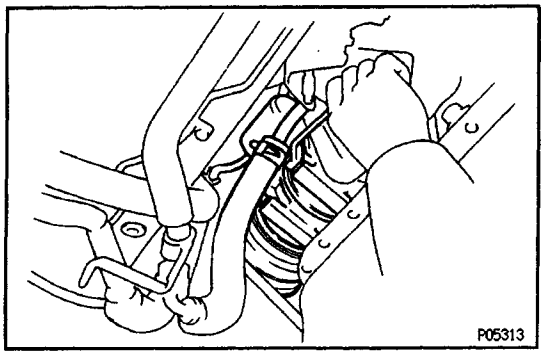

27. INSTALL A/C COMPRESSOR

(a) Temporarily install the A/C compressor with the two bolts

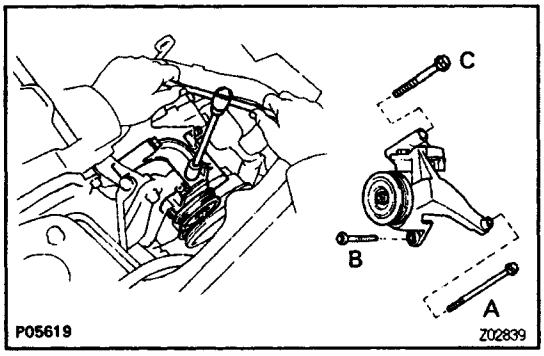

(b) Install the idler pulley bracket with the three bolts.

Torque:

25 N–m (250 kgf–cm, 18 ft–lbf) for A
27 N–m (275 kgf–cm, 20 ft–lbf) for B
37 N–m (375 kgf–cm, 27 ft–lbf) for C

(c) Connect the A/C compressor connector.

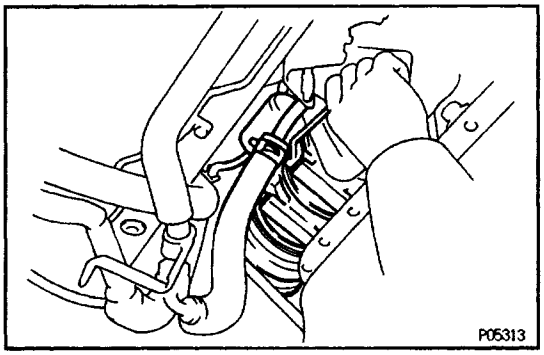

(d) Tighten the two bolts of the lower side of the A/C compressor.

Torque: 25 N–m (250 kgf–cm, 18 ft–lbf)

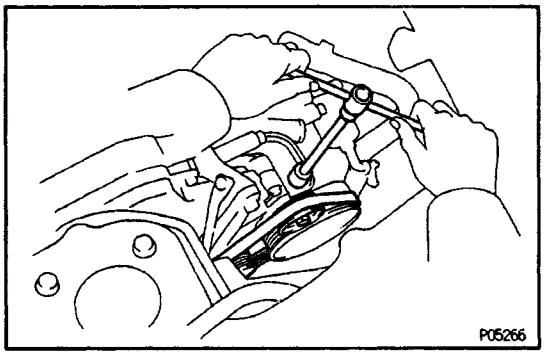

(e) Install the drive belt with the adjusting bolt.

(f) Tighten the idler pulley nut.

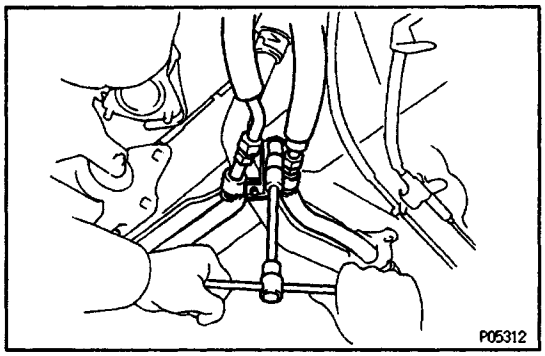

(g) Install the A/C pipes with the two clamps and nut.

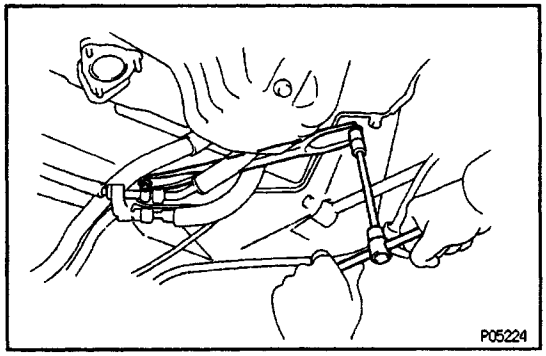

(h) Install the lower suspension brace with the two bolts.

Torque: 73 N–m (740 kgf–cm, 54 ft–lbf)

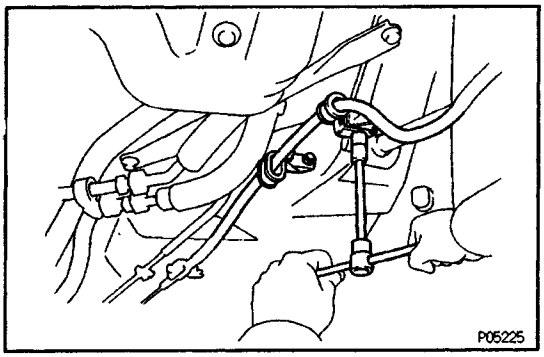

(i) Install the parking brake cable with the two clamps and three bolts.

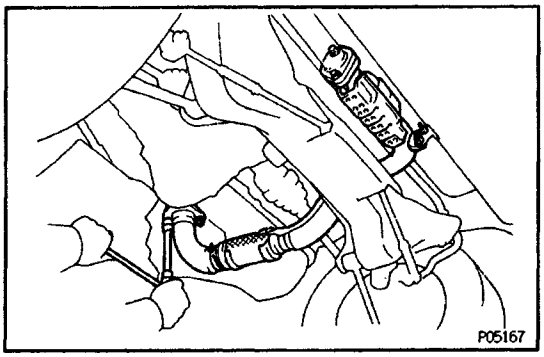

28. INSTALL FRONT EXHAUST PIPE

(a) Place two new gaskets to the front and rear of the front exhaust pipe.

(b) Using a 14 mm deep socket wrench, install the front exhaust pipe with three new nuts.

Torque: 62 N–m (630 kgf–cm, 46 ft–lbf)

(c) Install the two bolts holding the front exhaust pipe to the tailpipe.

Torque: 43 N–m (440 kgf–cm, 32 ft–lbf)

(d) Install the two bolts holding the front exhaust pipe bracket to the tailpipe bracket.

Torque: 19 N–m (190 kgf–cm, 14 ft–lbf)

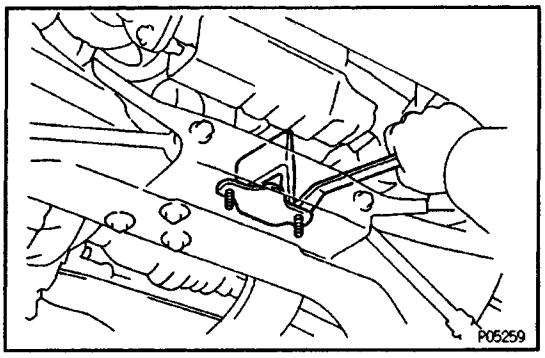

(e) Install the damper with the two bolts.

Torque: 21 N–m (210 kgf–cm, 15 ft–lbf)

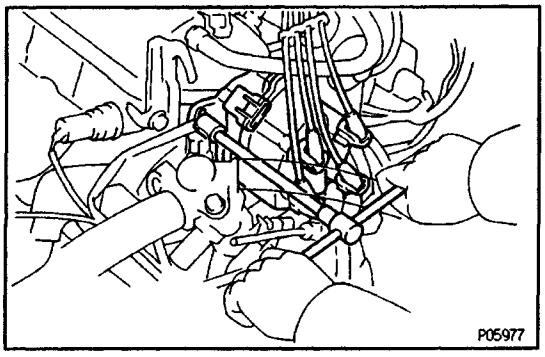

29. INSTALL DISTRIBUTOR

(See steps 3 to 6 Distributor Installation)

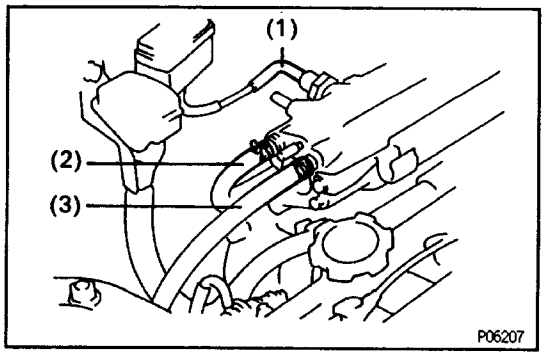

30. CONNECT HOSES AND GROUND STRAP

Connect the following hoses:

(1) MAP vacuum hose to intake manifold
(2) A/C idle–up air hose (from port F) to intake manifold
(3) Brake booster vacuum hose to intake manifold

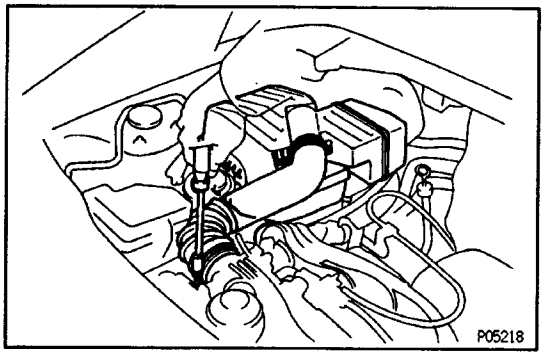

31. INSTALL AIR CLEANER CAP

(a) Install the air filter.
(b) Install the air cleaner cap with the four clamps.
(c) Connect the air cleaner hose to the throttle body.
(d) Connect the IATS connector.

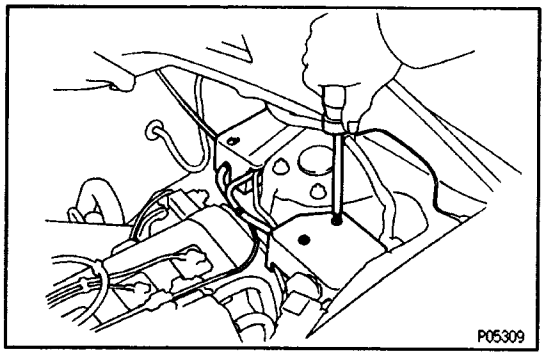

32. (w/ CRUISE CONTROL SYSTEM)
INSTALL CRUISE CONTROL ACTUATOR AND ACCELERATOR LINKAGE

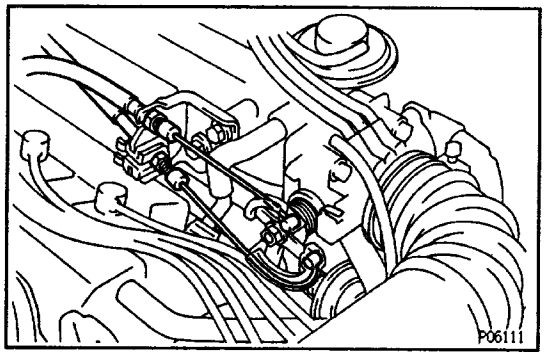

33. CONNECT ACCELERATOR LINKAGE TO THROTTLE BODY
34. (A/T)
CONNECT THROTTLE CABLE TO THROTTLE BODY
35. FILL WITH ENGINE COOLANT
36. CONNECT CABLE TO NEGATIVE TERMINAL OF BATTERY
37. START ENGINE AND CHECK FOR LEAKS
38. PERFORM ENGINE ADJUSTMENT (See Tune–Up)
39. INSTALL ENGINE HOOD SIDE PANELS
40. PERFORM ROAD TEST

Check for abnormal noise, shock, slippage, correct shift points and smooth operation.

41. RECHECK ENGINE COOLANT LEVEL AND OIL LEVEL

5S–FE ENGINE

ENGINE MECHANICAL

DESCRIPTION

The 5S–FE engine is an in–line, 4–cylinder, 2.2 liter DOHC 16–valve engine.

EG10Y–01

OPERATION

EG0AX–03

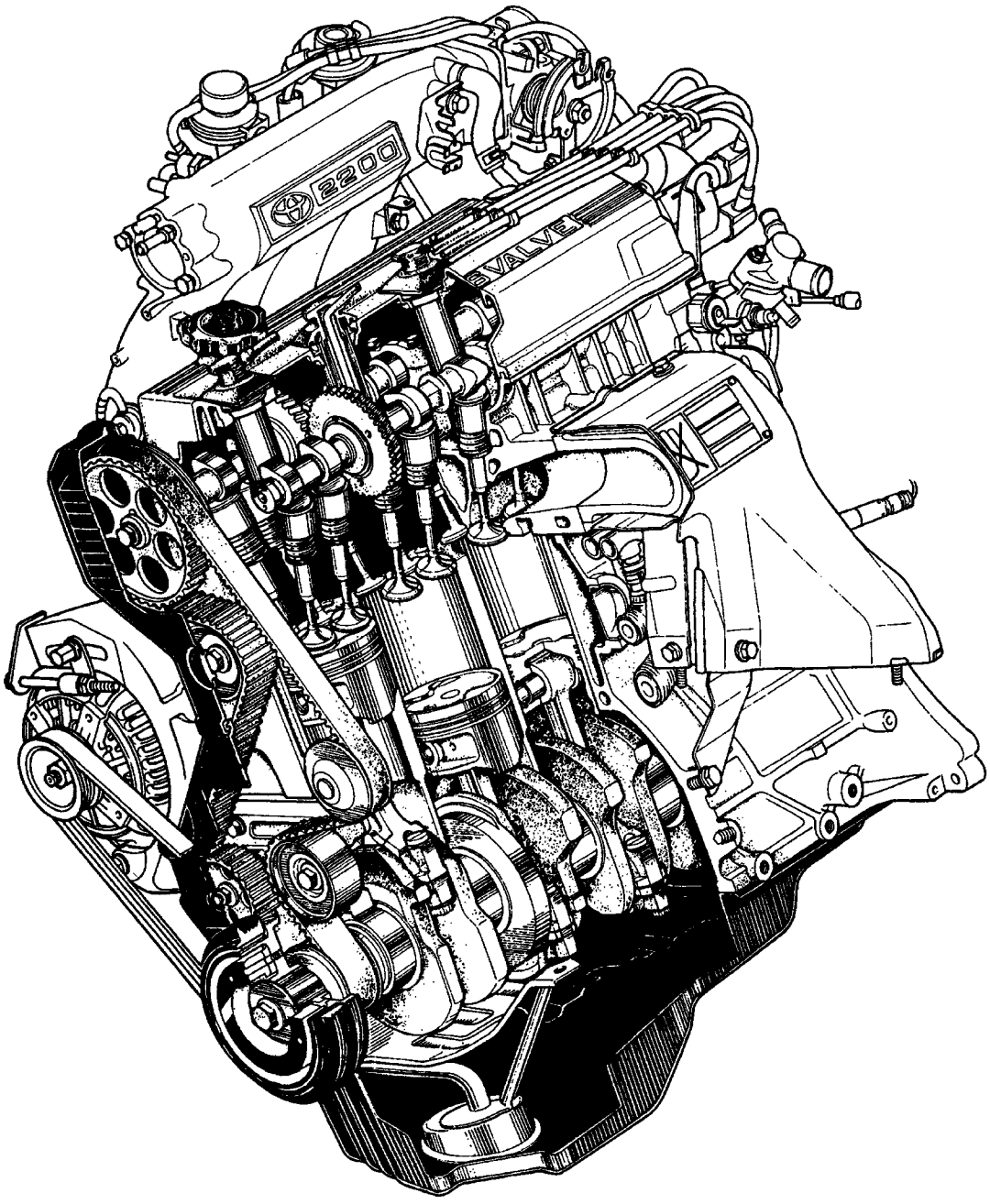

P04222

EXHAUST SYSTEM

EG0C4–02

COMPONENTS

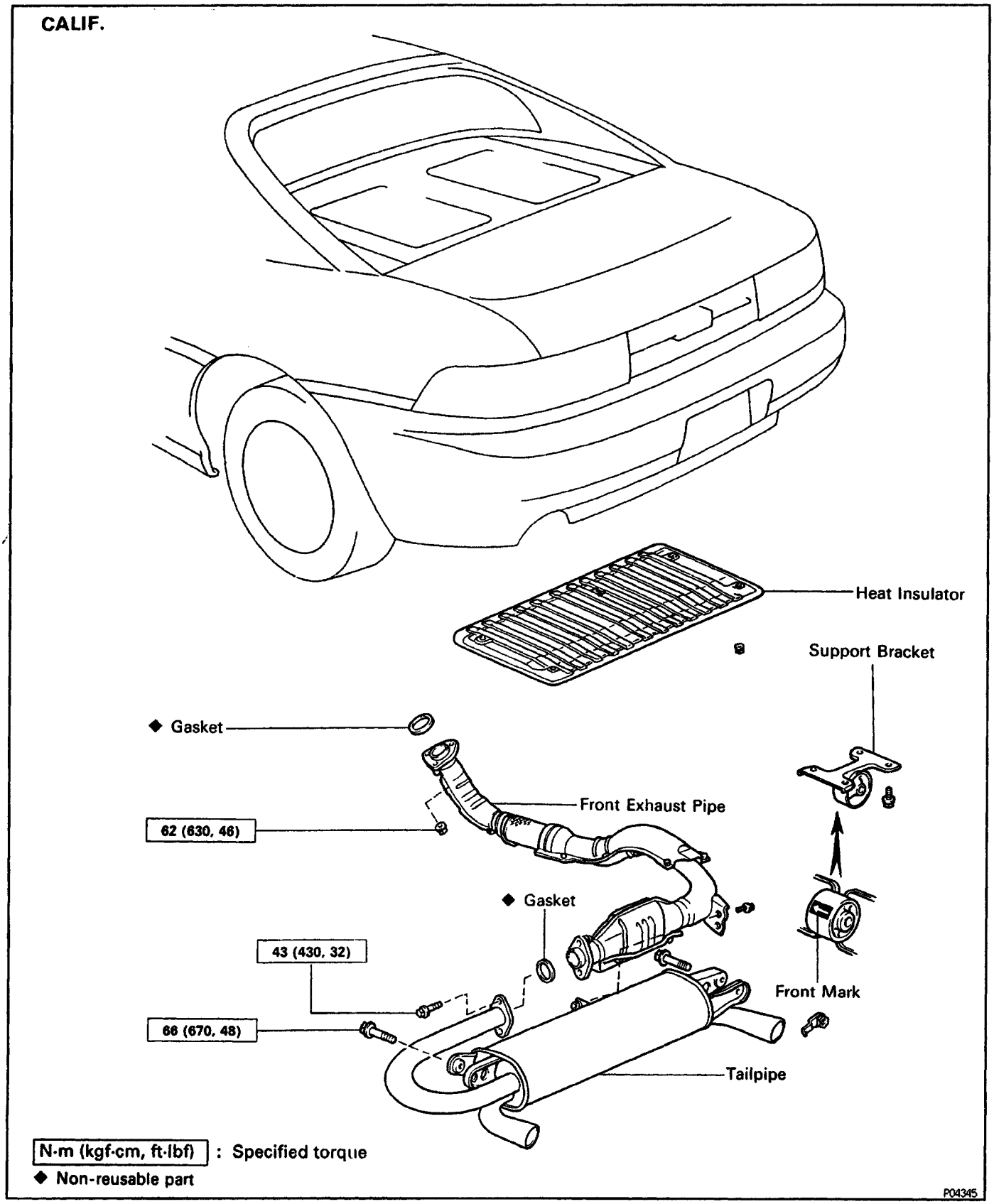

Ex. CALIF.

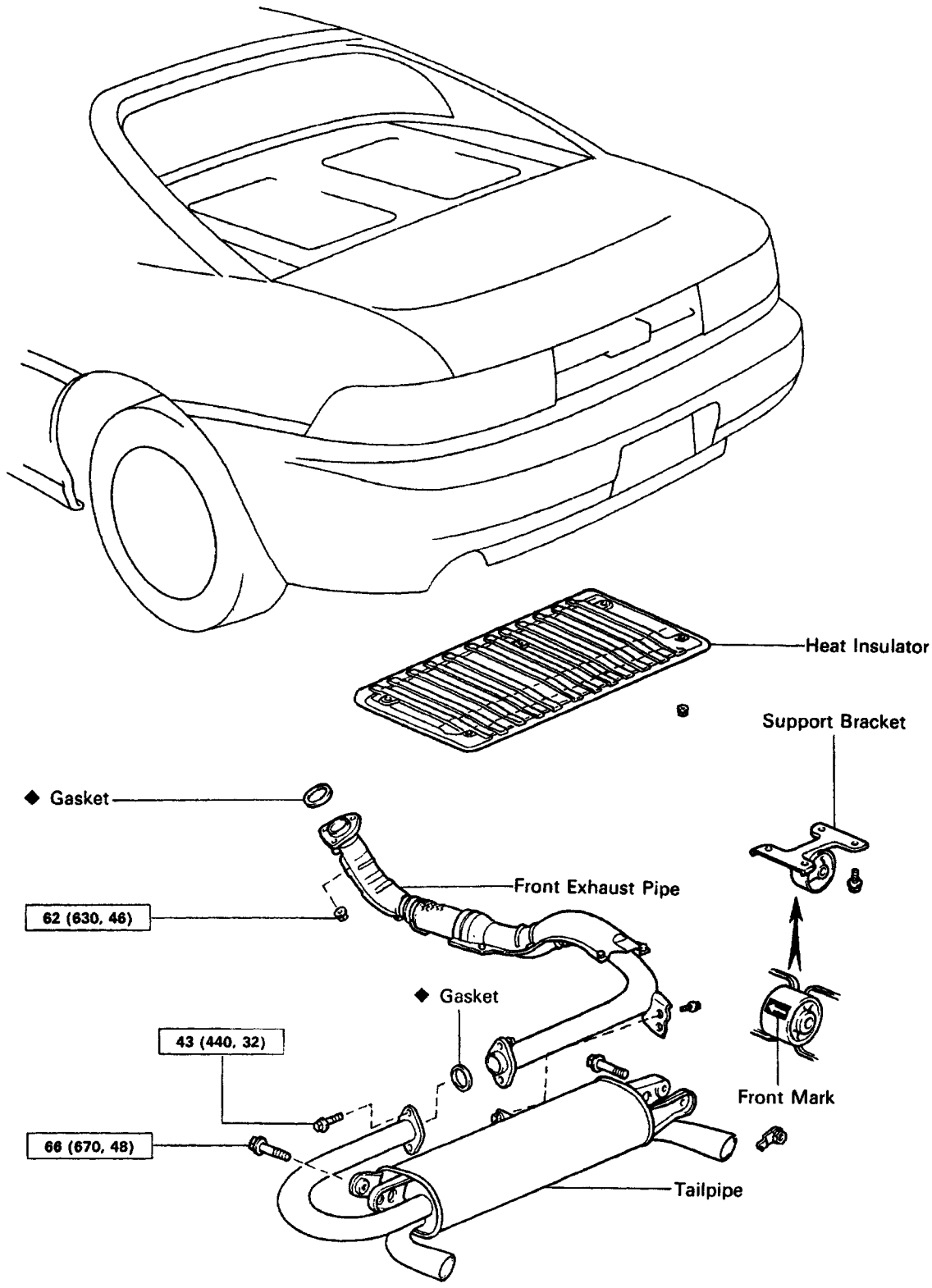

N·m (kgf·cm, ft·lbf) : Specified torque
◆ Non-reusable part

P04346

IDLE AND OR 2500 RPM CO HC CHECK

HINT: This check is used only to determine whether or not the idle CO/HC complies with regulations.

1. INITIAL CONDITIONS

(a) Engine at normal operating temperature
(b) Air cleaner installed
(c) All pipes and hoses of air induction system connected
(d) All accessories switched OFF
(e) All vacuum lines properly connected

HINT: All vacuum hoses for EGR systems, etc. should be properly connected.

(f) SMPI system wiring connectors fully plugged
(g) Ignition timing set correctly
(h) Transmission in neutral range
(i) Tachometer and CO/HC meter calibrated by hand

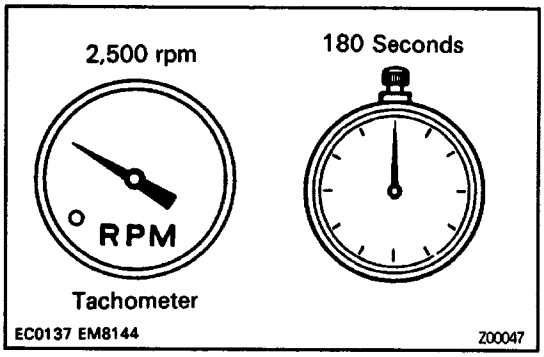

2. START ENGINE

3. RACE ENGINE AT 2,500 RPM FOR APPROX. 180 SECONDS

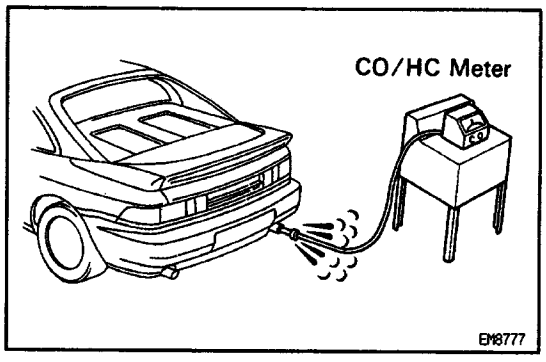

4. INSERT CO/HC METER TESTING PROBE INTO TAILPIPE AT LEAST 40 cm (1.3 ft) DURING IDLING

5. IMMEDIATELY CHECK CO/HC CONCENTRATION AT IDLE AND/OR 2,500 RPM

HINT: When performing the 2 mode (2,500 rpm and idle) test, follow the measurement order prescribed by the applicable local regulations.

Troubleshooting

If the CO/HC concentration does not comply with regulations, perform troubleshooting in the order given below.

(a) Check oxygen sensor operation.
(See Oxygen Sensor Inspection under MPI System)

(b) See the table below for possible causes, and then inspect and correct the applicable causes if neces–sary.

HC	CO	Problems	Causes
High	Normal	Rough idle	1. Faulty ignitions: • Incorrect timing • Fouled, shorted or improperly gapped plugs • Open or crossed high–tension cords • Cracked distributor cap 2. Incorrect valve clearance 3. Leaky EGR valve 4. Leaky intake and exhaust valves 5. Leaky cylinder
High	Low	Rough idle (Fluctuating HC reading)	1. Vacuum leaks: • PCV hose • EGR valve • Intake manifold • Throttle body • IACV • Brake booster line 2. Lean mixture causing misfire
High	High	Rough idle (Black smoke from exhaust)	1. Restricted air filter . Faulty MPI systems: • Faulty pressure regulator • Clogged fuel return line • Defective ECTS • Defective IATS • Defective MAP • Faulty PCM E (& T) • Faulty injector • Faulty throttle position sensor

V01054

ENGINE MECHANICAL

DESCRIPTION

The 5S–FE engine is an in–line, 4–cylinder, 2.2 liter DOHC 16–valve engine.

EG10Y–01

OPERATION

EG0AX–03

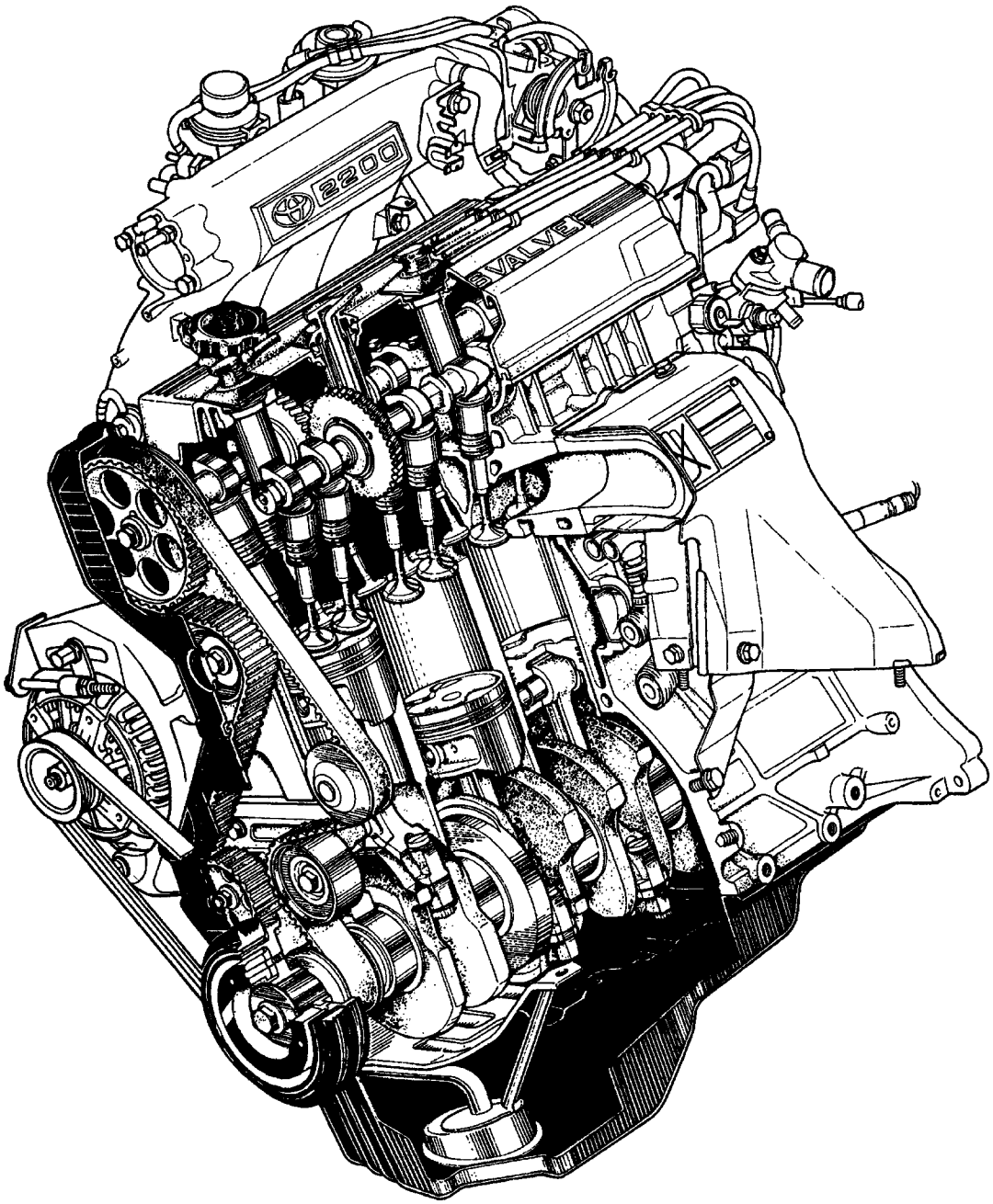

P04222

The 5S–FE engine is an in–line, 4–cylinder engine with the cylinders numbered 1 – 2 – 3 – 4 from the front. The crankshaft is supported by 5 bearings inside the crankcase. These bearings are made of aluminum alloy.

The crankshaft is integrated with 8 weights for balance. Oil holes are placed in the center of the crankshaft to supply oil to the connecting rods, bearing, pistons and other components.

The ignition order is 1 – 3 – 4 – 2. The cylinder head is made of aluminum alloy, with a cross flow type intake and exhaust layout and with pent–roof type combustion chambers. The spark plugs are located in the center of the combustion chambers.

The intake manifold has 4 independent long ports and utilizes the inertial supercharging effect to improve engine torque at low and medium speeds.

Exhaust and intake valves are equipped with irregular pitch springs made of special valve spring carbon steel which are capable of functioning no matter what the engine speed.

The intake camshaft is driven by a timing belt, and a gear on the intake camshaft engages with a gear on the exhaust camshaft to drive it. The cam journal is supported at 5 places between the valve lifters of each cylinder and on the front end of the cylinder head. Lubrication of the cam journals and gears is accomplished by oil being supplied through the oiler port in the center of the camshaft.

Adjustment of the valve clearance is done by means of an outer shim type system, in which valve adjusting shims are located above the valve lifters. This permits replacement of the shims without removal of the camshafts.

Pistons are made of high temperature–resistant aluminum alloy, and a depression is built into the piston head to prevent interference with the valves.

Piston pins are the full–floating type, with the pins fastened to neither the piston boss nor the connecting rods. Instead, snap rings are fitted on both ends of the pins, preventing the pins from falling out.

The No.1 compression ring is made of steel and the No.2 compression ring is made of cast iron. The oil ring is made of a combination of steel and stainless steel. The outer diameter of each piston ring is slightly larger than the diameter of the piston and the flexibility of the rings allows them to hug the cylinder walls when they are mounted on the piston. Compression rings No. 1 and No.2 work to prevent gas leakage from the cylinder and the oil ring works to scrape oil off the cylinder walls to prevent it from entering the combustion' chambers.

The cylinder block is made of cast iron. It has 4 cylinders which are approximately twice the length of the piston stroke. The top of each cylinder is closed off by the cylinder head and the lower end of the cylinders becomes the crankcase, in which the crankshaft is installed. In addition, the cylinder block contains a water jacket, through which coolant is pumped to cool the cylinders.

The oil pan is bolted onto the bottom of the cylinder block. The oil pan is an oil reservoir made of pressed steel sheet. A dividing plate is included inside the oil pan to keep sufficient oil in the bottom of the pan even when the vehicle is tilted. This dividing plate also prevents the oil from making waves when the vehicle is stopped suddenly and the oil shifts away from the oil pump suction pipe.

PREPARATION

SST (SPECIAL SERVICE TOOLS)

EG0AY – 04

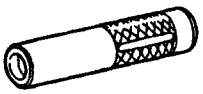	09201–41020 Valve Stem Oil Seal Replace	
	09201–70010 Valve Guide Bushing Remover & Replacer	
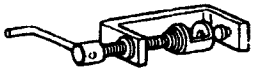	09202–70010 Valve Spring Compressor	
	09213–54015 Crankshaft Pulley Holding Tool	
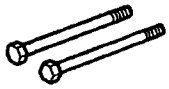	(09214–00030) Bolt	
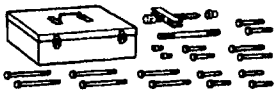	09213–60017 Crankshaft Pulley & Gear Puller Set	
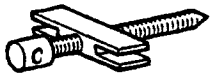	(09213–00020) Body With Bolt	
	(09213–00030) Handle	
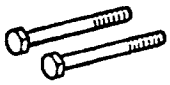	(09213–00050) Bolt Set	
	09222–30010 Connecting Rod Bushing Remover & Replacer	
	09223–46011 Crankshaft Front Oil Seal Replacer	Camshaft oil seal
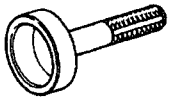	09223–63010 Crankshaft Rear Oil Seal Replacer	
	09228–06500 Oil Filter Wrench	

	09248–55020 Valve Clearance Adjust Tool Set	
	(09248–05011) Valve Lifter Press	
	(09248–05021) valve Lifter stopper	
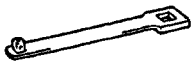	09249–63010 Torque Wrench Adaptor	
	09226–10010 Crankshaft Front & Rear Bearing Replacer	
	09278–54012 Drive Shaft Holding Tool	Camshaft timing pulley
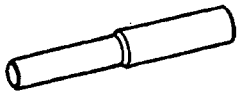	09301–32010 Clutch Guide Tool	
	09330–00021 Companion Flange Holding Tool	Crankshaft pulley
	09616–30011 Steering Worm Bearing Adjusting Screw Wrench	Oil pump pulley
	09816–30010 Oil Pressure Switch Socket	Knock sensor
	09843–18020 Diagnosis Check Wire	

EG0AZ–01

RECOMMENDED TOOLS

	09090–04010 Engine Sling Device	For suspension engine
	09200–00010 Engine Adjust Kit	

	09258–00030 Hose Plug set	Plug for the vacuum hose, fuel hose etc.
	09904–00010 Expander set	

EG000–03

EQUIPMENT

Battery specific gravity gauge	
Belt tension gauge	
Caliper gauge	
CO/HC meter	
Compression gauge	
Connecting rod aligner	
Cylinder gauge	
Dial indicator	
Dye penetrant	
Engine Tune–up tester	
Heater	
Magnetic finger	
Micrometer	
Piston ring compressor	
Piston ring expander	
Plastigage	
Precision straight edge	
Soft brush	
Spring tester	Valve spring
Steel square	Valve spring
Thermometer	

Torque wrench	
Valve seat cutter	
Vernier calipers	

EG001–04

SSM (SERVICE SPECIAL MATERIALS)

08826–00080 Seal packing or equivalent	Camshaft bearing cap Cylinder head cover Rear oil sear retainer
08833–00070 Adhesive 1324, THREE BOND 1324 or equivalent	Flywheel or drive plate mounting bolt
08833–00080 Adhesive 1344, THREE BOND 1344, LOCTITE 242 or equivalent	Oil pressure switch

SERVICE SPECIFICATIONS

SERVICE DATA

EGOCS–04

Tune – up	Engine oil API grade	SG Energy–Conserving II multigrade
	Battery specific gravity	1.25 – 1.27 (when fully charged at 20°C (68°F))
	High–tension cord resistance – Limit	25 kΩ per cord
	Alternator drive belt tension	
	New belt	120 ± 20 lbf
	Uesd belt	104 ± 20 lbf
	Valve clearance (Cold) – Intake	0.19 – 0.29 mm (0.007 – 0.011 in.)
	Valve clearance (Cold) – Exhaust	0.28 – 0.38 mm (0.011 – 0.015 in.)
	Ignition timing	10° BTDC @ idle
	Idle speed (for USA M/T)	750 ± 50 rpm
	Idle speed (for USA A/T)	700 ± 50 rpm
	Idle speed (for CANADA M/T)	850 ± 50 rpm
Intake manifold vacuum	at idle speed	60 kPa (450 mmHg, 17.7 in.Hg)
Compression pressure	at 250 rpm – STD	1,226 kPa (12.5 kgf/cm², 178 psi) or more
	at 250 rpm – Limit	981 kPa (10.0 kgf/cm², 142 psi)
	Difference of pressure between each cylinder	98 kPa (1.0 kgf/cm², 14 psi) or less
Idler pulley tension spring	Free length	46.0 mm (1.811 in.)
	Installed load at 50.5 mm (1.988 in.)	32 – 37 N (3.25 – 3.75 kgf, 7.2 – 8.3 lbf)
Cylinder head	Warpage – Cylinder block side (Limit)	0.05 mm (0.020 in.)
	Warpage – Manifold side (Limit)	0.08 mm (0.031 in.)
	Valve seat – Refacing angle	30°, 45°, 75°
	Valve seat – Contacting angle	45°
	Valve seat – Contacting width	1.0 – 1.4 mm (0.039 – 0.055 in.)
Valve guide bushing	Inside diameter	6.010 – 6.030 mm (0.2366 – 0.2374 in.)
	Outside diameter (for repair part) – STD	11.000 – 11.027 mm (0.4331 – 0.4342 in.)
	Outside diameter (for repair part) – O/S 0.05	11.050 – 11.077 mm (0.4350 – 0.4361 in.)
Valve	Valve overall length – STD (Intake)	97.60 mm (3.8425 in.)
	Valve overall length – STD (Exhaust)	98.45 mm (3.8760 in.)
	Valve overall length – Limit (Intake)	97.1 mm (3.823 in.)
	Valve overall length – Limit (Exhaust)	98.0 mm (3.853 in.)
	Vale face angle	44.5°
	Stem diameter (Intake)	5.970 – 5.985 mm (0.2350 – 0.2356 in.)
	Stem diameter (Exhaust)	5.965 – 5.980 mm (0.2348 – 0.2354 in.)
	Stem oil clearance – STD (Intake)	0.025 – 0.060 mm (0.0010 – 0.0024 in.)
	Stem oil clearance – STD (Exhaust)	0.030 – 0.065 mm (0.0012 – 0.0026 in.)
	Stem oil clearance – Limit (Intake)	0.08 mm (0.0031 in.)
	Stem oil clearance – Limit (Exhaust)	0.10 mm (0.0039 in.)
	Margin thickness – STD	0.8 – 1.2 mm (0.031 – 0.047 in.)
	Margin thickness – Limit	0.5 mm (0.020 in.)
Valve spring	Squareness – Limit	2.0 mm (0.079 in.)
	Free length	41.9 mm (1.650 in.)
	Installed tension at 34.7 mm (1.366 in.)	164 – 189 N (16.7 – 19.3 kgf, 36.8 – 42.5 lbf)

Valve lifter	Lifter diameter	30.966 – 30.976 mm (1.2191 – 1.2195 in.)
	Lifter bore diameter	31.000 – 31.018 mm (1.2205 – 1.2213 in.)
	Oil clearance – STD	0.024 – 0.052 mm (0.0009 – 0.0020 in.)
	Oil clearance – Limit	0.07 mm (0.0028 in.)
Manifold	Warpage – Limit	0.30 mm (0.0118 in.)
Camshaft	Thrust clearance – STD (Intake)	0.045 – 0.100 mm (0.0018 – 0.0039 in.)
	Thrust clearance – STD (Exhaust)	0.030 – 0.085 mm (0.0012 – 0.0033 in.)
	Thrust clearance – Limit (Intake)	0.12 mm (0.0047 in.)
	Thrust clearance – Limit (Exhaust)	0.10 mm (0.0039 in.)
	Journal oil clearance – STD	0.025 – 0.062 mm (0.0010 – 0.0024 in.)
	Journal oil clearance – Limit	0.10 mm (0.0039 in.)
	Journal diameter	26.959 – 26.975 mm (1.0614 – 1.0620 in.)
	Circle rounout – Limit	0.04 mm (0.0016 in.)
	Cam lobe height – STD (Intake)	42.01 – 42.11 mm (1.6539 – 1.6579 in.)
	Cam lobe height – STD (Exhaust)	40.06 – 40.16 mm (1.5772 – 1.5811 in.)
	Cam lobe height – Limit (Intake)	41.90 mm (1.6496 in.)
	Cam lobe height – Limit (Exhaust)	39.95 mm (1.5728 in.)
	Camshaft gear backlash – STD	0.020 – 0.200 mm (0.0008 – 0.0079 in.)
	Camshaft gear backlash – Limit	0.30 mm (0.0188 in.)
	Camshaft gear spring end free distance	22.5 – 22.9 mm (0.886 – 0.902 in.)
Cylinder block	Cylinder head surface warpage – Limit	0.05 mm (0.0020 in.)
	Cylinder bore diameter – STD (Mark 1)	87.000 – 87.010 mm (3.4252 – 3.4256 in.)
	Cylinder bore diameter – STD (Mark 2)	87.010 – 87.020 mm (3.4256 – 3.4260 in.)
	Cylinder bore diameter – STD (Mark 3)	87.020 – 87.030 mm (3.4260 – 3.4264 in.)
	Cylinder bore diameter – Limit (STD)	87.23 mm (3.4342 in.)
	Cylinder bore diameter – Limit (O/S 0.50)	87.73 mm (3.4350 in.)
Piston and piston ring	Piston diameter – STD (Mark 1)	86.850 – 86.860 mm (3.4193 – 3.4197 in.)
	Piston diameter – STD (Mark 2)	86.860 – 86.870 mm (3.4197 – 3.4201 in.)
	Piston diameter – STD (Mark 3)	86.870 – 86.880 mm (3.4201 – 3.4205 in.)
	Piston diameter – O/S 0.50	87.350 – 87.380 mm (3.4390 – 3.4402 in.)
	Piston oil clearance – STD	0.14 – 0.016mm (0.0055 – 0.0063 in.)
	Piston oil clearance – Limit	0.18 mm (0.0071 in.)
	Piston ring groove clearance – No.1	0.040 – 0.080 mm (0.0016 – 0.0031 in.)
	Piston ring groove clearance – No.2	0.030 – 0.070 mm (0.0012 – 0.0028 in.)
	Piston ring end gap – STD (No.1)	0.270 – 0.500 mm (0.0106 – 0.0197 in.)
	Piston ring end gap – STD (No.2)	0.350 – 0.600 mm (0.0138 – 0.0234 in.)
	Piston ring end gap – STD (Oil)	0.200 – 0.550 mm (0.0079 – 0.0217 in.)
	Piston ring end gap – Limit (No.1)	1.10 mm (0.0433 in.)
	Piston ring end gap – Limit (No.2)	1.20 mm (0.0472 in.)
	Piston ring end gap – Limit (Oil)	1.15 mm (0.0453 in.)

Connecting rod	Thrust clearance – STD	0.160 – 0.312 mm (0.0063 – 0.0123 in.)
	T ·ıst clearance – Limit	0.35 mm (0.0138 in.)
	Connecting rod bearing center wall thickness	
	– STD (Mark 1)	1.484 – 1.488 mm (0.0584 – 0.0586 in.)
	– STD (Mark 2)	1.488 – 1.492 mm (0.0586 – 0.0587 in.)
	– STD (Mark 3)	1.492 – 1.496 mm (0.0587 – 0.0589 in.)
	Connecting rod oil clearance	
	– STD (STD)	0.024 – 0.055 mm (0.0009 – 0.0022 in.)
	– STD (U/S 0.25)	0.023 – 0.069 mm (0.0009 – 0.0027 in.)
	– Limit	0.08 mm (0.0031 in.)
	Rod bending – Limit per 100mm (3.94 in.)	0.05 mm (0.0020 in.)
	Rod twist – Limit per 100 mm (3.94 in.)	0.15 mm (0.0059 in.)
	Bushing inside diameter	22.005 – 22.017 mm (0.8663 – 0.8668 in.)
	Piston pin diameter	21.997 – 22.009 mm (0.8660 – 0.8665 in.)
	Piston pin oil clearance – STD	0.005 – 0.011 mm (0.0002 – 0.0004 in.)
	Piston pin oil clearance – Limit	0.05 mm (0.0020 in.)
	Connecting rod bolt outside diameter – STD	7.860 – 8.000 mm (0.3094 – 0.3150 in.)
	Connecting rod bolt outside diameter – Limit	7.60 mm (0.2992 in.)
Crankshaft	Thrust clearance – STD	0.020 – 0.220 mm (0.0008 – 0.0087 in.)
	Thrust clearance – Limit	0.30 mm (0.0118 in.)
	Thrust washer thickness	2.440 – 2.490 mm (0.0961 – 0.0980 in.)
	Main journal oil clearance	
	– STD (No.3 – STD)	0.025 – 0.044 mm (0.0010 – 0.0017 in.)
	– STD (No.3 – U/S 0.25)	0.027 – 0.067 mm (0.0011 – 0.0026 in.)
	– STD (Others – STD)	0.015 – 0.034 mm (0.0006 – 0.0013 in.)
	– STD (Others – U/S 0.25)	0.019 – 0.059 mm (0.0007 – 0.0023 in.)
	– Limit	0.08 mm (0.0031 in.)
	Main journal diameter – STD	54.988 – 55.003 mm (2.1653 – 2.1655 in.)
	Main journal diameter – U/S 0.25	54.745 – 54.755 mm (2.1553 – 2.1557 in.)
	Main bearing center wall thickness	
	– STD (No.3 – Mark 1)	1.992 – 1.995 mm (0.0784 – 0.0785 in.)
	– STD (No.3 – Mark 2)	1.995 – 1.998 mm (0.0785 – 0.0787 in.)
	– STD (No.3 – Mark 3)	1.998 – 2.001 mm (0.0787 – 0.0788 in.)
	– STD (No.3 – Mark 4)	2.001 – 2.004 mm (0.0788 – 0.0789 in.)
	– STD (No.3 – Mark 5)	2.004 – 2.007 mm (0.0789 – 0.0790 in.)
	– STD (Others – Mark 1)	1.997 – 2.000 mm (0.0786 – 0.0787 in.)
	– STD (Others – Mark 2)	2.000 – 2.003 mm (0.0787 – 0.0789 in.)
	– STD (Others – Mark 3)	2.003 – 2.006 mm (0.0789 – 0.0790 in.)
	– STD (Others – Mark 4)	2.006 – 2.009 mm (0.0790 – 0.0791 in.)
	– STD (Others – Mark 5)	2.009 – 2.012 mm (0.0791 – 0.0792 in.)
	Crank pin diameter – STD	51.985 – 52.000 mm (2.0466 – 2.0472 in.)
	Crank pin diameter – U/S 0.25	51.745 – 51.755 mm (2.0372 – 2.0376 in.)
	Circle runout – Limit	0.06 mm (0.0024 in.)
	Main journal taper and out–of–round Limit	0.02 mm (0.0008 in.)
	Crank pin taper and out–of–round Limit	0.02 mm (0.0008 in.)

TORQUE SPECIFICATION

EG0C6–03

Part tightened	N·m	kgf·cm	ft·lbf
Oil pump pulley x Oil pump drive shaft	28	290	21
No.2 idler pulley x Cylinder block	42	425	31
Crankshaft pulley x Crankshaft	108	1,100	80
Camshaft timing pulley x Camshaft	54	550	40
Camshaft timing pulley x Camshaft (for use with SST)	37	380	27
No.1 idler pulley x Cylinder head	42	425	31
Spark plug x Cylinder head	18	180	13
Cylinder head x Cylinder block (1st)	49	500	36
Cylinder head x Cylinder block (2nd)	Turn 90°		
Spark plug tube x Cylinder head	39	400	29
Camshaft bearing cap x Cylinder head	19	190	14
Cylinder head cover x Cylinder head	23	230	17
Engine hanger x Cylinder head	25	250	18
No.3 timing belt cover x Cylinder head	7.8	80	69 in.·lbf
Delivery pipe x Cylinder head	13	130	9
Fuel inlet pipe x Delivery pipe	34	350	25
Intake manifold x Cylinder head	19	195	14
Intake manifold stay x Intake manifold	22	220	16
Intake manifold stay x Cylinder block	42	425	31
Air intake chamber stay x Intake manifold	42	425	31
Air intake chamber stay x Cylinder head	42	425	31
EGR valve x intake manifold	13	130	9
EGR pipe x Cylinder head	59	600	43
Throttle body x Intake manifold	19	195	14
Water by–pass pipe x Water pump cover	8.8	90	78 in.·lbf
Water outlet housing x Cylinder head	15	150	11
TWC (main) x Exhaust manifold	29	300	22
Exhaust manifold x Cylinder head	49	500	36
TWC stay x TWC (main)	42	425	31
TWC stay x Cylinder block	42	425	31
Main bearing cap x Cylinder block	59	600	43
Connecting rod cap x Connecting rod (1 st)	25	250	18
Connecting rod cap x Connecting rod (2nd)	Turn 90°		
Rear oil seal retainer x Cylinder block	9.3	95	82 in.·lbf
Knock sensor x Cylinder block	37	380	27
Oil cooler x Cylinder block (relief valve)	78	800	58
Oil cooler x Cylinder block (nut)	7.8	80	69 in.·lbf
Water pump x Cylinder block (10 mm head)	7.8	80	69 in.·lbf
Water pump x Cylinder block (12 mm head for w/o A/C)	27	275	20
Alternator bracket x Cylinder block	43	440	32
Rear end plate x Cylinder block	9.3	95	82 in.·lbf
Flywheel x Crankshaft (M/T)	88	900	65
Drive plate x Crankshaft (A/T)	83	850	61
Clutch cover x Flywheel (M/T)	19	195	14
Transaxle x Cylinder block	64	650	47
Transaxle x Rear end plate	46	470	34
Heater water pipe x Cylinder block	46	470	34

No.2 rear end plate x Cylinder block	9.3	95	82 in.-lbf
No.2 rear end plate x Transaxle	19	195	14
Stiffener plate x Cylinder block	37	380	27
Stiffener plate x Transaxle	37	380	27
Starter x Rear end plate	39	400	29
Drive plate x Torque converter (A/T)	27	280	20
RN engine mounting bracket x Cylinder block	61	620	45
RH engine mounting insulator x Body	78	800	58
RH engine mounting insulator x Mounting bracket	52	530	38
RH engine mounting stay x Mounting insulator	73	740	54
RH engine mounting stay x Engine hanger	73	740	54
LH engine mounting bracket x Transaxle	52	530	38
LH engine mounting insulator x Mounting bracket (upper side)	73	740	54
LH engine mounting insulator x Transaxle (A/T)	52	530	38
LH engine mounting insulator x Body	78	800	58
LH engine mounting stay x Mounting insulator (M/T)	73	740	54
LH engine mounting stay x Transaxle (M/T)	25	250	18
Front engine mounting bracket x Transaxle	77	790	57
Front engine mounting insulator x Mounting bracket	96	980	70
Front engine mounting insulator x Body	73	740	54
Clutch release cylinder x Transaxle (M/T)	12	120	9
Rear engine mounting Bracket x Transaxle	77	790	57
Rear engine mounting insulator x Mounting bracket	87	890	64
Rear engine mounting insulator x Body	64	650	47
Lateral control rod x Body	35	360	26
Lateral control rod x LH engine mounting insulator	37	380	27
A/C idler pulley bracket x Cylinder block (12 mm head)	27	275	20
A/C idler pulley bracket x Cylinder block (14 mm head)	37	375	27
A/C compressor x Cylinder block	25	250	18
Front exhaust pipe x TWC (main)	62	630	46
Front exhaust pipe x Tailpipe	43	440	32
Front exhaust pipe bracket x Tailpipe bracket	19	190	14
Lower suspension brace x Body	73	740	54
Suspension member damper x Rear suspension lower crossmember	21	210	15
Tailpipe x Body bracket	66	670	48

TIMING BELT

EG117–01

COMPONENTS FOR REMOVAL AND INSTALLATION

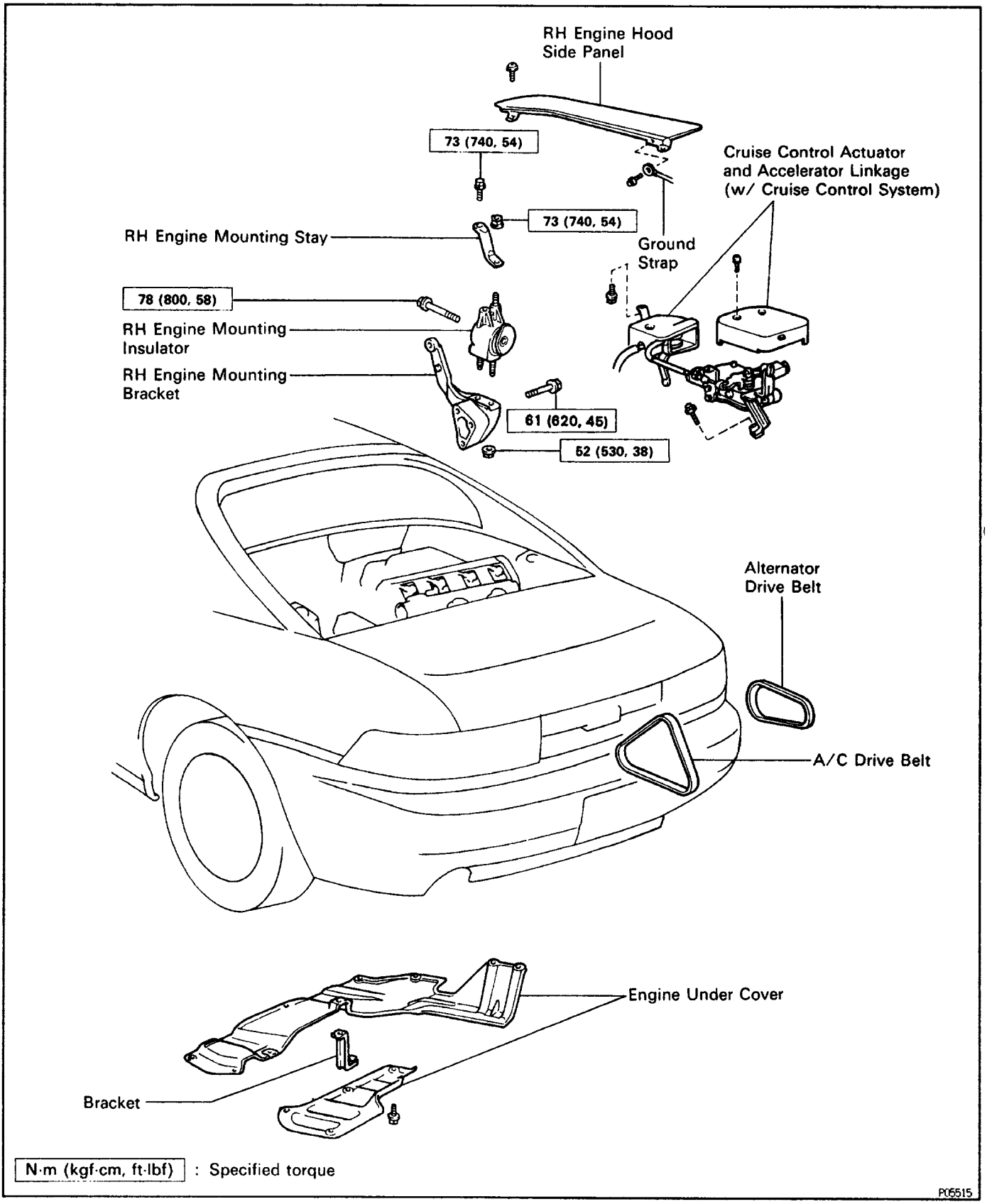

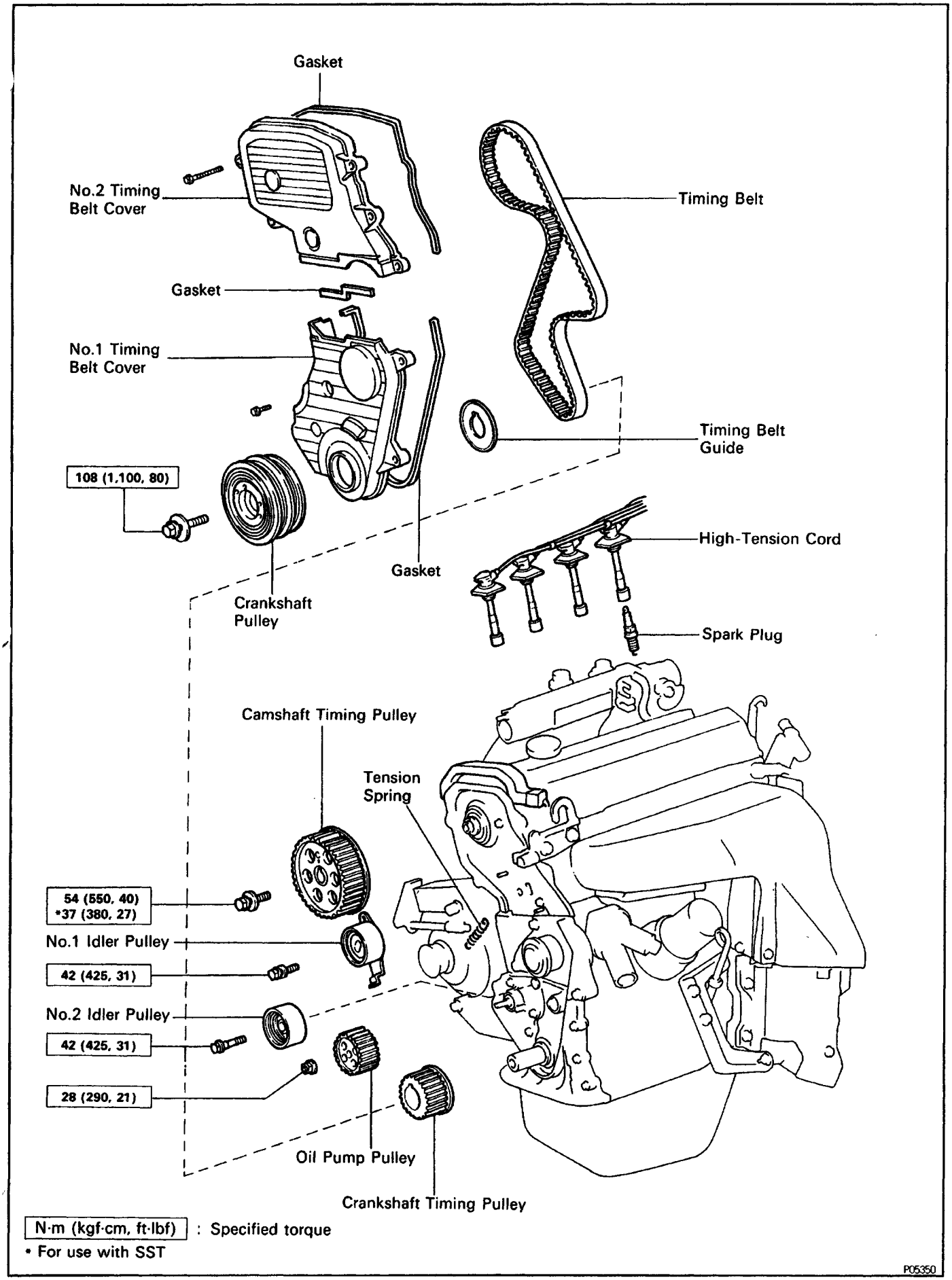
Gasket
No.2 Timing Belt Cover
Timing Belt
Gasket
No.1 Timing Belt Cover
Timing Belt Guide
108 (1,100, 80)
High-Tension Cord
Gasket
Crankshaft Pulley
Spark Plug
Camshaft Timing Pulley
Tension Spring
54 (550, 40)
*37 (380, 27)
No.1 Idler Pulley
42 (425, 31)
No.2 Idler Pulley
42 (425, 31)
28 (290, 21)
Oil Pump Pulley
Crankshaft Timing Pulley
N·m (kgf·cm, ft·lbf) : Specified torque
* For use with SST
P05350

EG116–01

TIMING BELT REMOVAL

(See Components for Removal and installation)

1. DISCONNECT CABLE FROM NEGATIVE TERMINAL OF BATTERY

CAUTION: Turn the ignition switch to 'LOCK'. Disconnect the negative terminal from the battery. Wait at least 20 seconds before proceeding with work.

2. REMOVE ENGINE UNDER COVERS

3. REMOVE RH ENGINE HOOD SIDE PANEL

4. (w/ CRUISE CONTROL SYSTEM)
REMOVE CRUISE CONTROL ACTUATOR AND ACCELERATOR LINKAGE

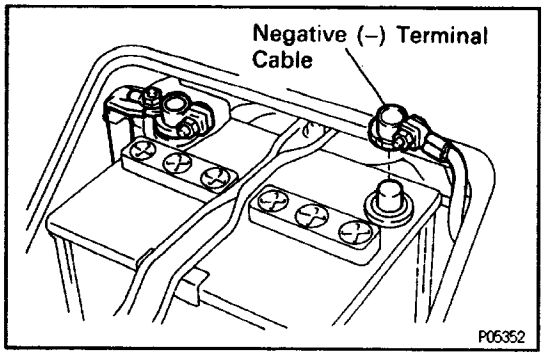

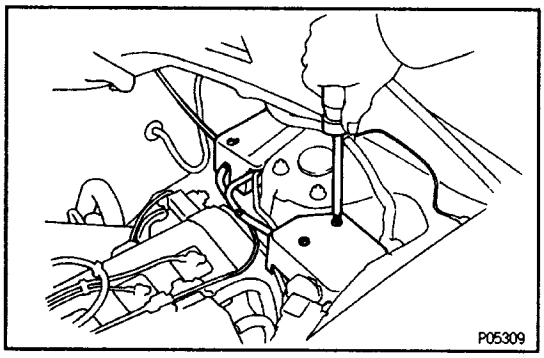

5. DISCONNECT GROUND STRAP CONNECTOR

6. DISCONNECT BRAKE BOOSTER VACUUM HOSE

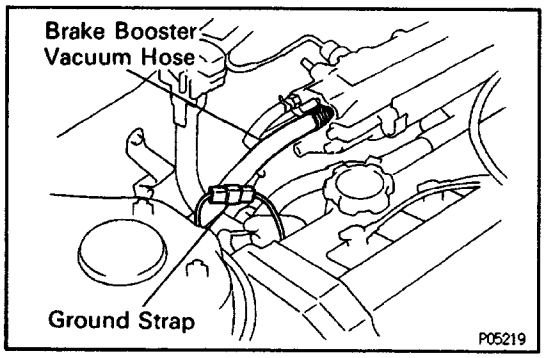

7. REMOVE A/C DRIVE BELT

Loosen the pully nut and adjusting bolt, and remove the drive belt.

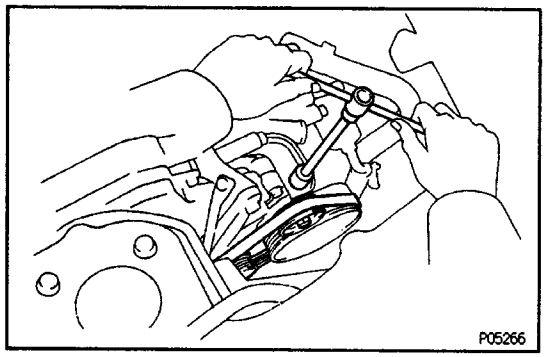

8. REMOVE ALTERNATOR DRIVE BELT

(a) Loosen the pivot bolt and adjusting lock bolt.

(b) Loosen the adjusting bolt, and remove the drive belt, pivot bolt and adjusting lock bolt.

9. REMOVE RH REAR WHEEL

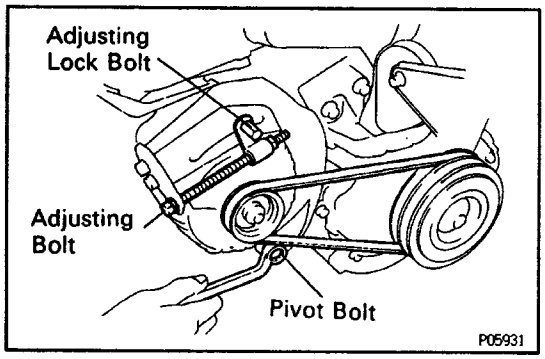

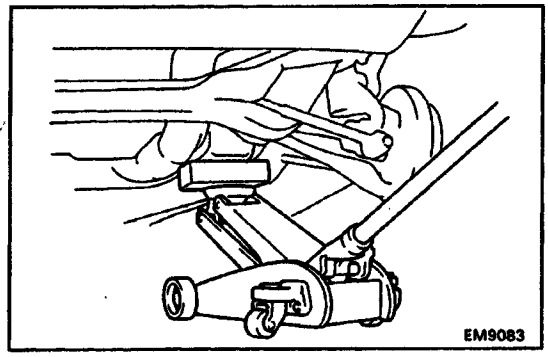

14. SLIGHTLY JACK UP ENGINE

Raise the engine enough to remove the weight from the engine mounting on the right side.

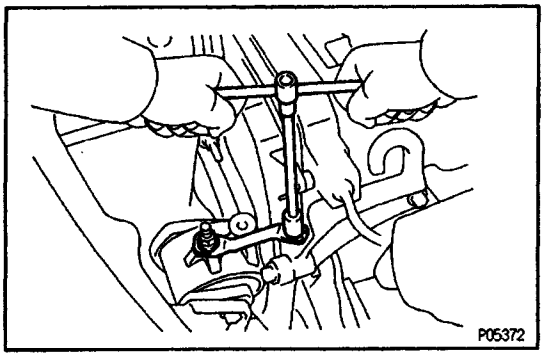

11. REMOVE RH ENGINE MOUNTING STAY

Remove the bolt, nut and mounting stay.

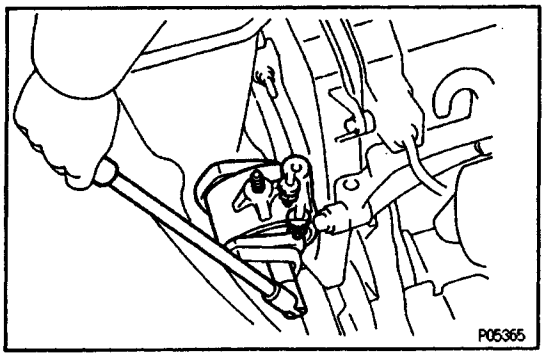

12. REMOVE RH ENGINE MOUNTING INSULATOR

Remove the through bolt, two nuts and mounting insulator.

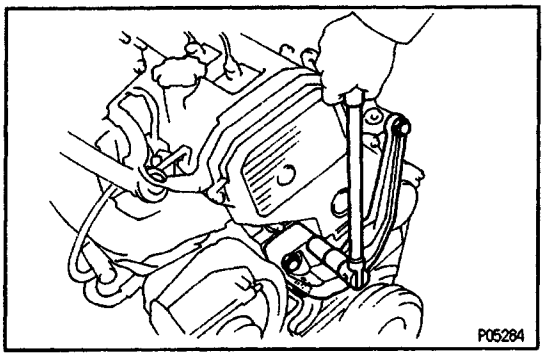

13. REMOVE RH ENGINE MOUNTING BRACKET

(a) Remove the four bolts.

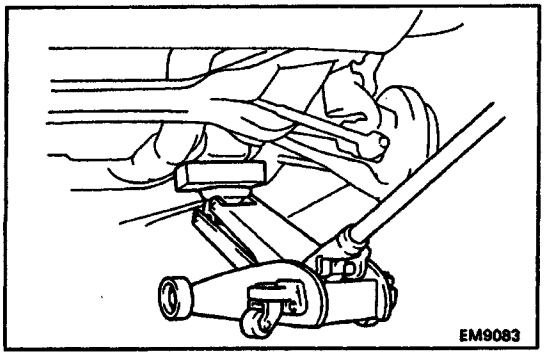

(b) Remove the mounting bracket.

HINT: Raise the engine as far as it will go, and remove the mounting bracket.

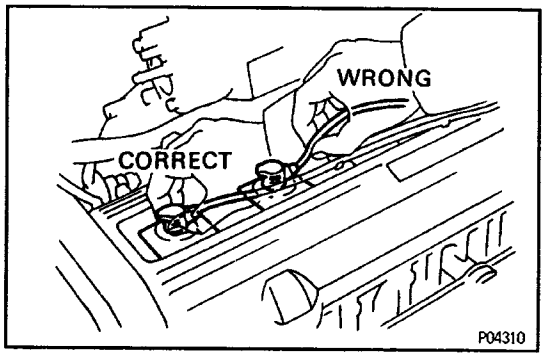

14. REMOVE SPARK PLUGS

(a) Disconnect the four high–tension cords at the rubber boot. Do not pull the cords.

NOTICE: Pulling on or bending the cords may damage the conductor inside.

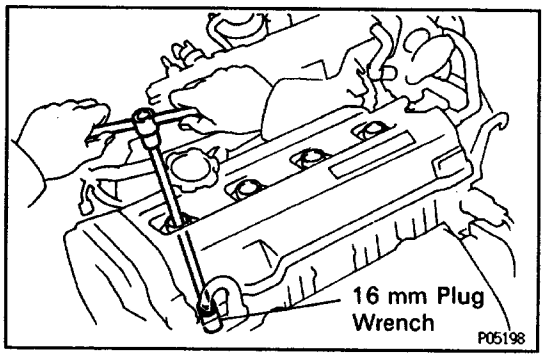

(b) Using a 16 mm plug wrench, remove the four spark plugs.

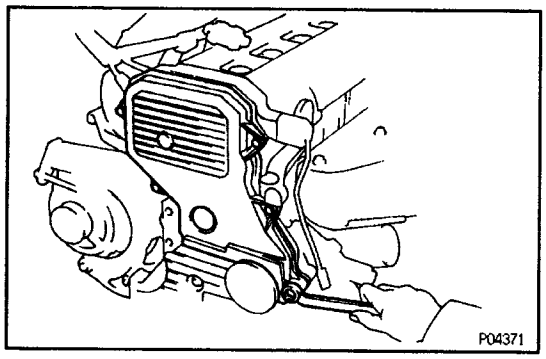

15. REMOVE NO.2 TIMING BELT COVER

Remove the five bolts, timing belt cover and two gaskets.

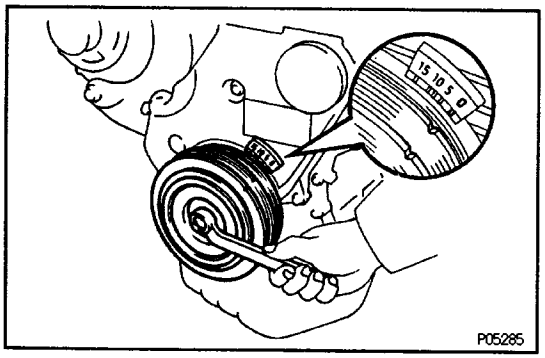

16. SET NO.1 CYLINDER TO TDC/COMPRESSION

(a) Turn the crankshaft pulley and align its groove with timing mark ”0” of the No.1 timing belt cover.

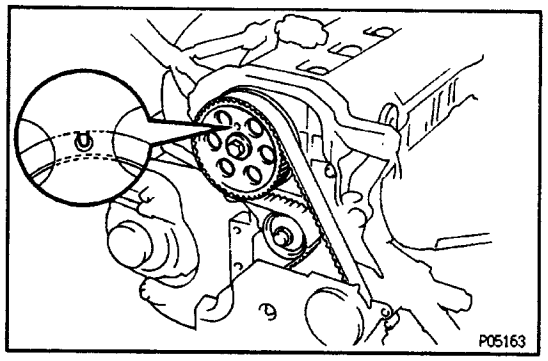

(b) Check that the hole of the camshaft timing pulley is aligned with the timing mark of the bearing cap.
If not, turn the crankshaft one revolution (360˚).

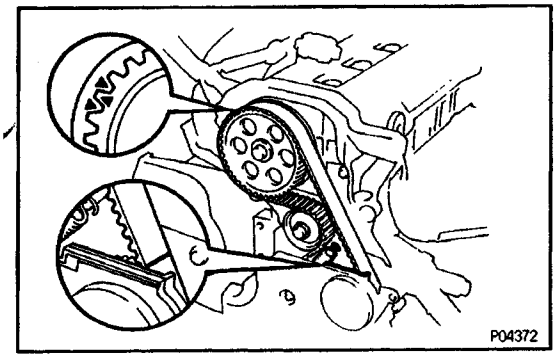

17. REMOVE TIMING BELT FROM CAMSHAFT TIMING PULLEY

HINT (When re–using timing belt): Place the match–marks on the timing belt and camshaft timing pulley, and place rnatchmark on timing belt to match the end of the No.1 timing belt cover.

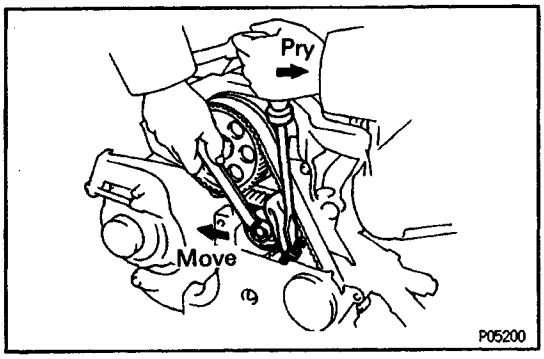

(a) Loosen the Mounting bolt of the No. 1 idler pulley and shift the pulley toward the left as far as it will go, and temporarily tighten it.

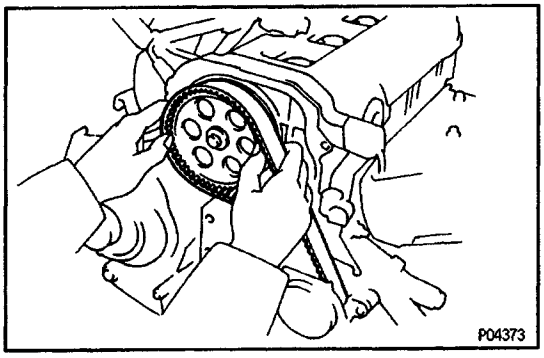

(b) Remove the timing belt from the camshaft timing pulley.

18. REMOVE CAMSHAFT TIMING PULLEY

Using SST, remove the bolt and timing pulley.
SST 09249–63010, 09278–54012

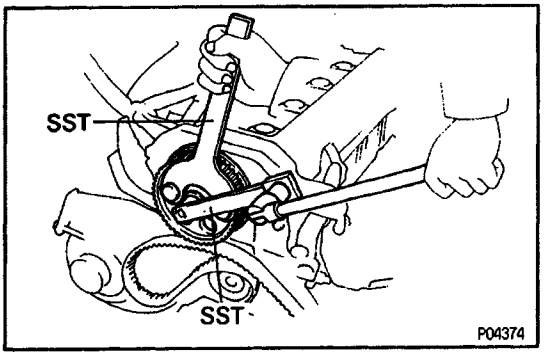

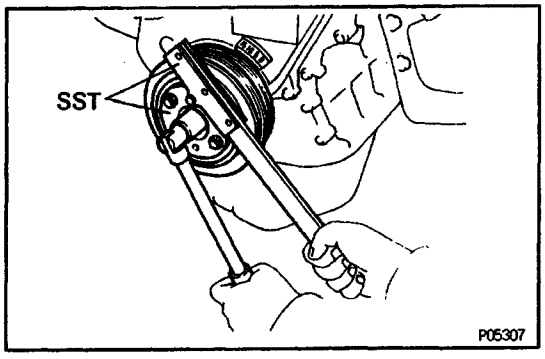

19. REMOVE CRANKSHAFT PULLEY

(a) Using SST, remove the pulley bolt.
SST 09213–54015 (09214–00030), 09330–00021

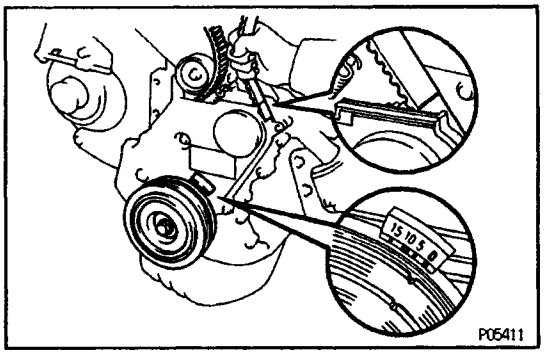

HINT (When re–using timing belt): After loosening the crankshaft pulley bolt, check that the timing belt matchmark aligns with the end of the No. 1 timing belt cover when the crankshaft pulley groove is aligned with the timing mark ”0” of the No. 1 timing belt cover. If the matchmark does not align, align as follows:

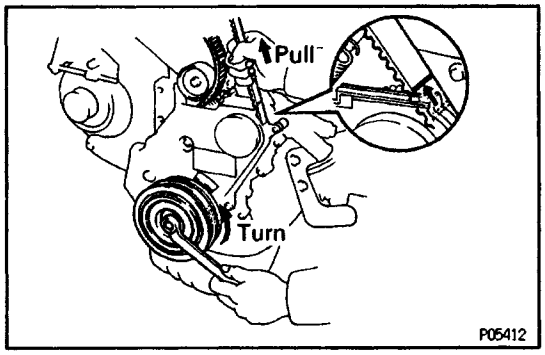

(When matchmark is out of alignment on clockwise)

- Align the matchmark by pulling the timing belt up on the water pump pulley side while turning the crankshaft pulley counterclockwise.

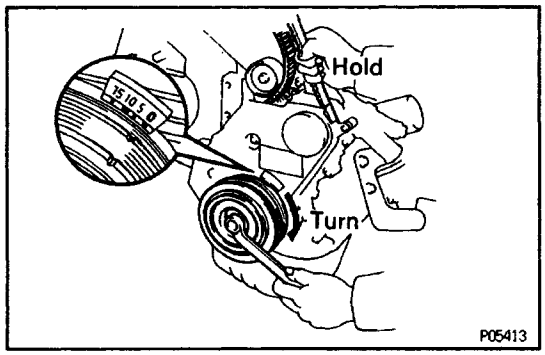

- After aligning the matchmark, hold the timing belt. And turn the crankshaft pulley clockwise, and align its groove with timing mark ”0” of the No.1 timing belt cover.

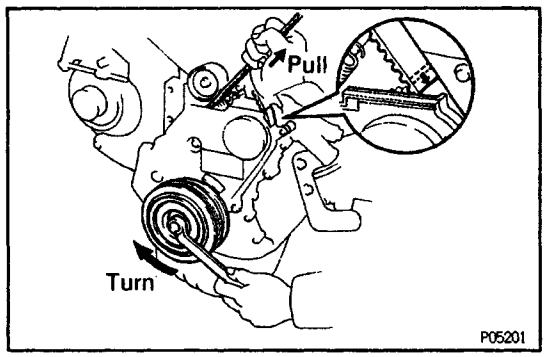

(When matchmark is out of alignment on counter–clockwise)

- Align the matchmark by pulling the timing belt up on the No.1 idler pulley side while turning the crankshaft pulley clockwise.

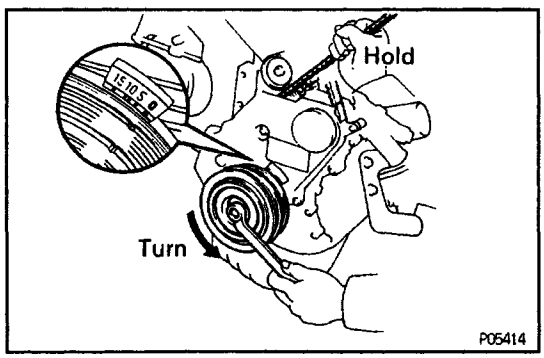

- After aligning the matchmark, hold the timing belt. And turn the crankshaft pulley counter–clockwise, and align its groove with timing mark ”0” of the No.1 timing belt cover.

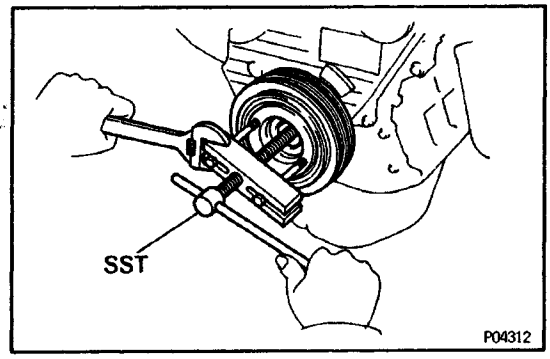

(b) Using SST, remove the pulley.
SST 0921360017 (09213–00020, 09213–00030, 09213–00050)
HINT (When re–using timing belt): Remove the pulley without turning it.

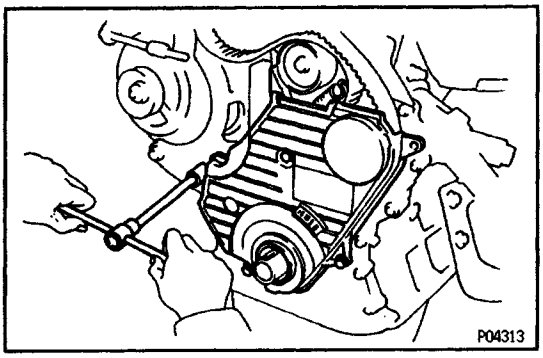

20. REMOVE NO.1 TIMING BELT COVER
Remove the four bolts, timing belt cover and gasket.

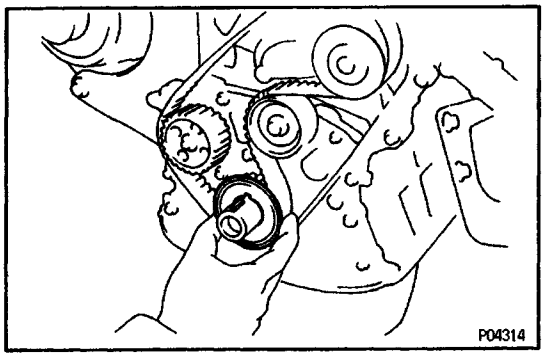

21. REMOVE TIMING BELT GUIDE

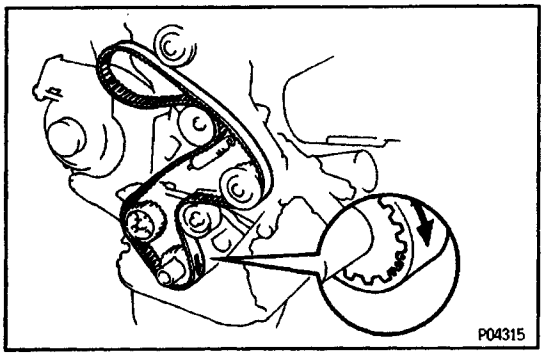

22. REMOVE TIMING BELT
HINT (When re–using timing belt): Draw a direction arrow on the timing belt (in the direction of engine revolution), and place matchmarks on the timing belt and crankshaft timing pulley.

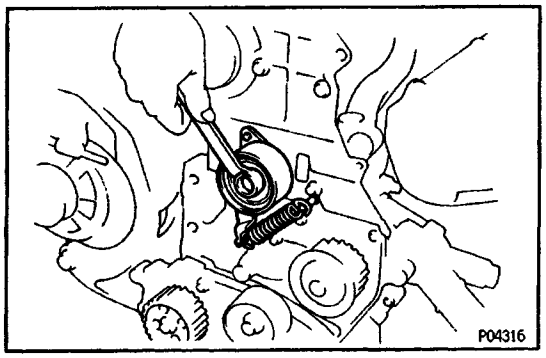

23. REMOVE No.1 IDLER PULLEY AND TENSION SPRING
Remove the bolt, pulley and tension spring.

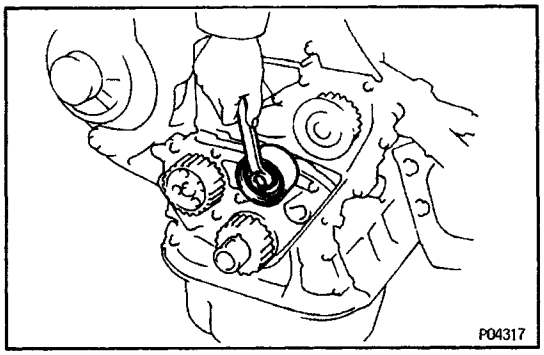

24. REMOVE NO.2 IDLER PULLEY

Remove the bolt and pulley.

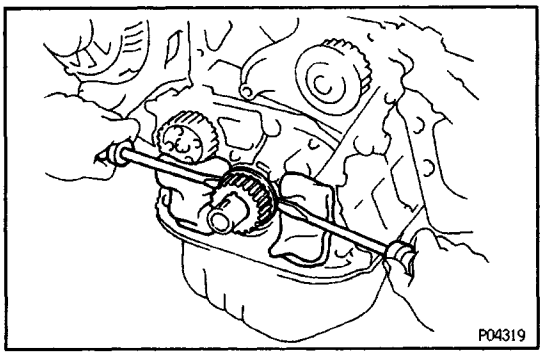

25. REMOVE CRANKSHAFT TIMING PULLEY

If the pulley cannot be removed by hand, use two screwdrivers.

HINT: Position shop rags as shown to prevent damage.

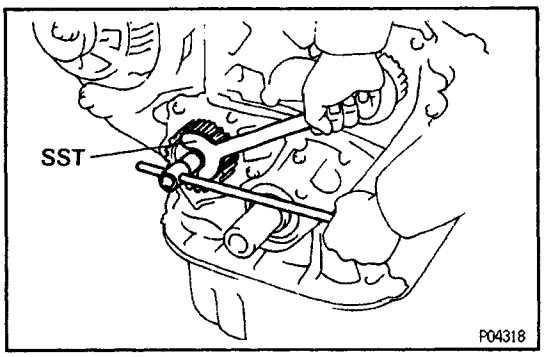

26. REMOVE OIL PUMP PULLEY

Using SST, remove the nut and pulley.

SST 09616–30011

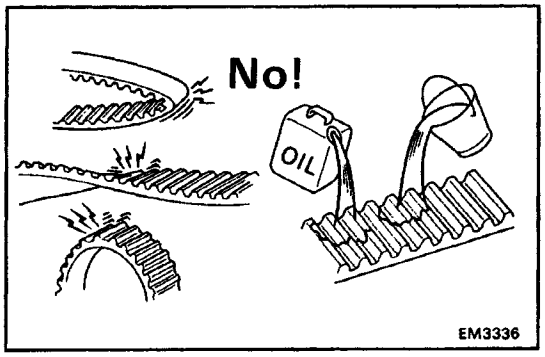

TIMING BELT COMPONENTS INSPECTION

1. INSPECT TIMING BELT

NOTICE:

- **Do not bend, twist or turn the timing belt inside out.**
- **Do not allow the timing belt to come into contact with oil, water or steam.**
- **Do not utilize timing belt tension when installing or removing the mounting bolt of the camshaft timing pulley.**

If there are any defects as shown in the illustration, check the following points:

(a) Premature parting

- Check the proper installation.
- Check the timing cover gasket for damage and proper installation.

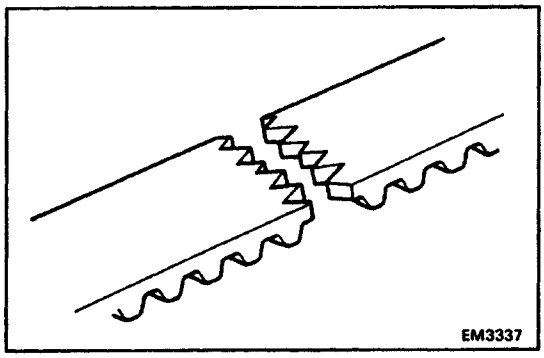

(b) If the belt teeth are cracked or damaged, check to see if either camshaft or water pump is locked.

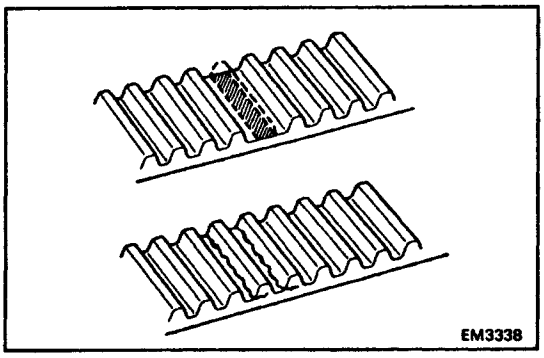

(c) If there is noticeable wear or cracks on the belt face, check to see if there are nicks on the side of the idler pulley lock.

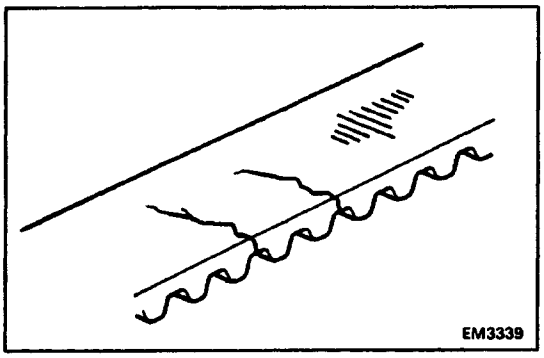

(d) If there is wear or damage on only one side of the belt, check the belt guide and the alignment of each pulley.

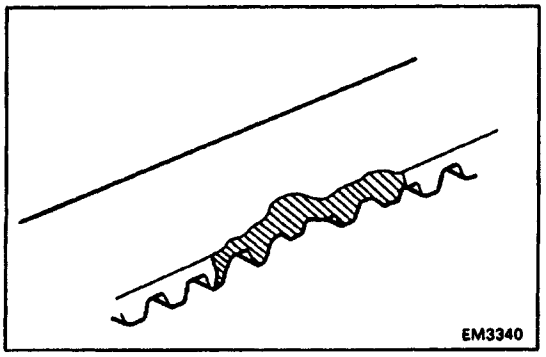

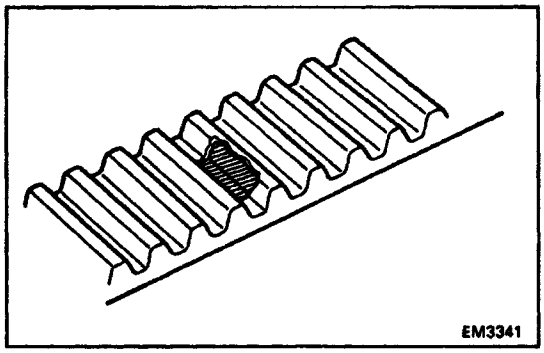

(e) If there is noticeable wear on the belt teeth, check the timing cover for damage, correct gasket installation, and the foreign material on the pulley teeth.
If necessary, replace the timing belt.

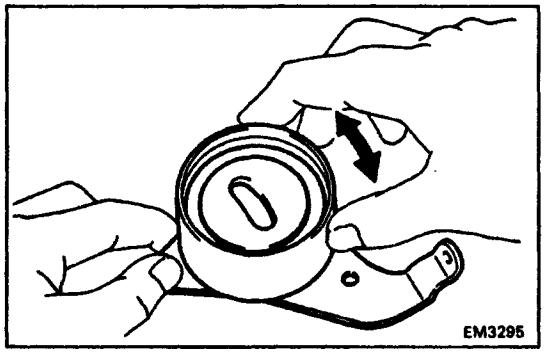

2. INSPECT IDLER PULLEYS

Check that the idler pulley turns smoothly.
If necessary, replace the idler pulley.

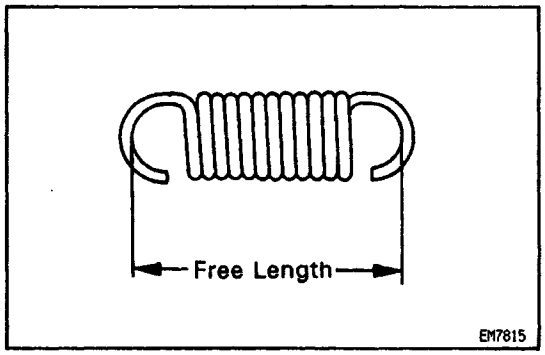

3. INSPECT TENSION SPRING

(a) Measure the free length of tension spring.

Free length:

46.0 mm (1.811 in.)

If the free length is not as specified, replace the tension spring.

(b) Measure the tension or the tension spring at the specified installed length.

Installed tension (at 50.5 mm (1.988 in.)):

32 – 37 N (3.25 – 3.75 kgf, 7.2 – 8.3 lbf)

If the installed tension is not as specified, replace the tension spring.

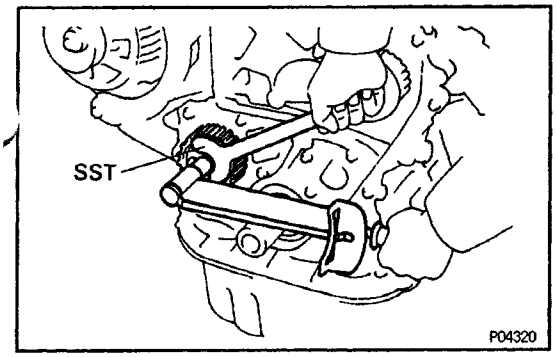

TIMING BELT INSTALLATION

(See Components for Removal and Installation)

1. INSTALL OIL PUMP PULLEY

(a) Align the cutouts of the pulley and shaft, and slide on the pulley.

(b) Using SST, install the pulley nut.

SST 09616–30011

Torque: 28 N–m (290 kgf–cm, 21 ft–lbf)

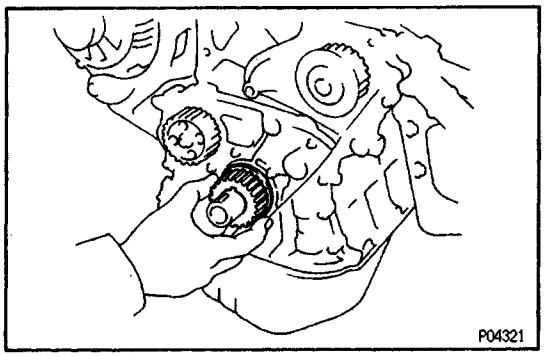

2. INSTALL CRANKSHAFT TIMING PULLEY

(a) Align the timing pulley set key with the key groove of the pulley.

(b) Slide on the timing pulley, facing the flange side inward.

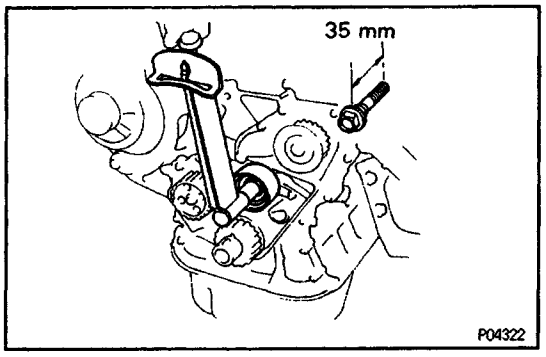

3. INSTALL N0.2 IDLER PULLEY

(a) Install the pulley with the bolt.

Torque: 42 N–m (425 kgf–cm, 31 ft–lbf)

HINT: Use bolt 35 mm (1.38 in.) in length.

(b) Check that the idles pulley moves smoothly.

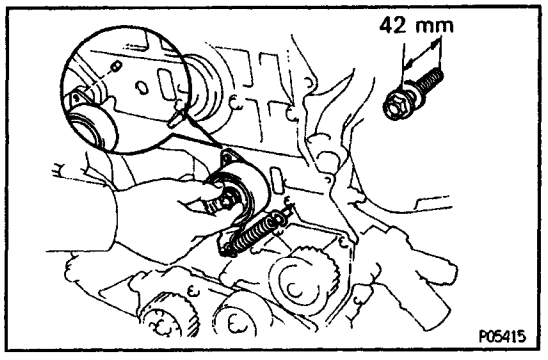

4. TEMPORARILY INSTALL N0.1 IDLER PULLEY AND TENSION SPRING

(a) Align the bracket pin hole with the pivot pin.

(b) Install the pulley with the bolt. Do not tighten the bolt yet.

HINT: Use bolt 42 mm (1.65 in.) in length.

(c) Install the tension spring.

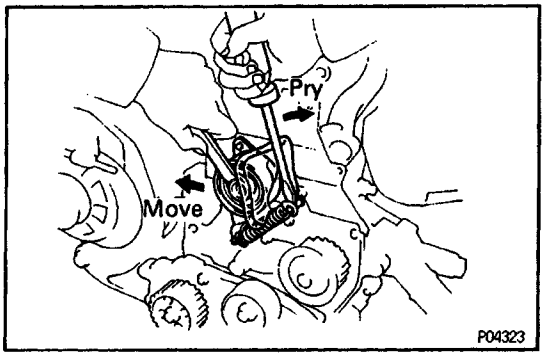

(d) Pry the pulley toward the left as far as it will go and tighten the bolt.

(e) Check that the idler pulley moves smoothly.

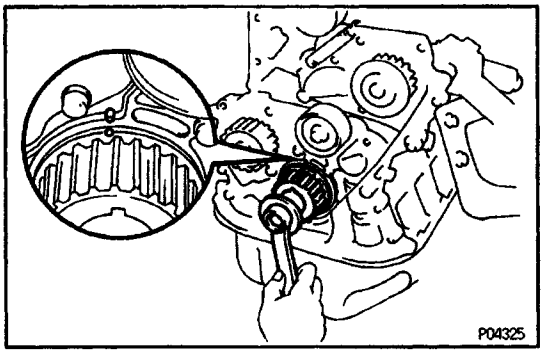

5. TEMPORARILY INSTALL TIMING BELT

NOTICE: The engine should be cold.

(a) Using the crankshaft pulley bolt, turn the crankshaft and align the timing marks of the crankshaft timing pulley and oil pump body.

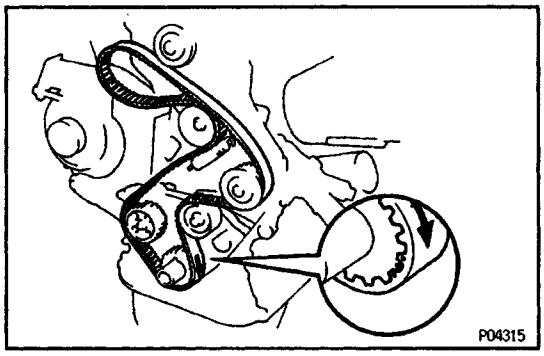

(b) Remove any oil or water on the crankshaft pulley, oil pump pulley, water pump pulley, No. 1 idler pulley, No. 2 idler pulley and keep them clean.

(c) Install the timing belt on the crankshaft timing pulley, oil pump pulley, No.1 idler pulley, water pump pulley and No.2 idler pulley.

HINT (When re–using timing belt): Align the points marked during removal, and install the belt with the arrow pointing in the direction of engine revolution.

6. INSTALL TIMING BELT GUIDE

Install the guide, facing the cup side outward.

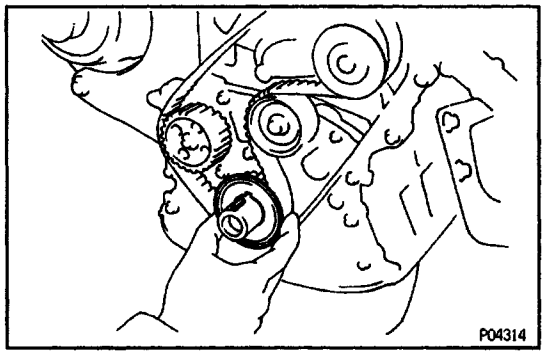

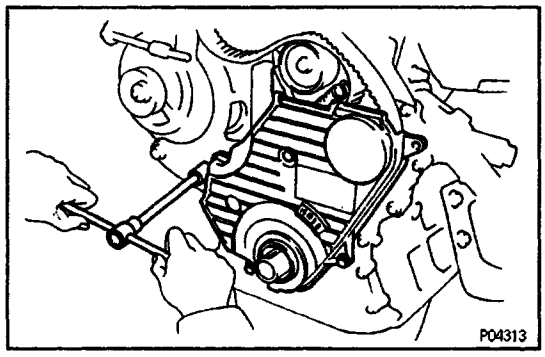

7. INSTALL NO.1 TIMING BELT COVER

(a) Install the gasket to the timing belt cover.

(b) Install the timing belt cover with the four bolts.

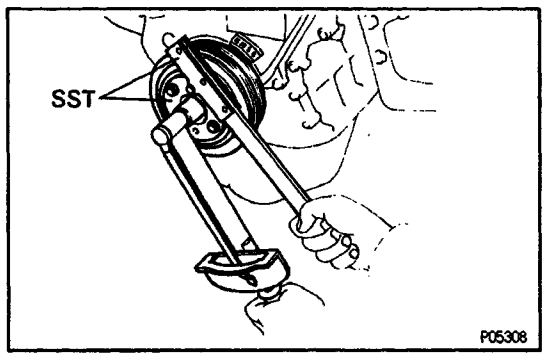

8. INSTALL CRANKSHAFT PULLEY

(a) Align the pulley set key with the key groove of the pulley, and slide on the pulley.

(b) Using SST, install the pulley bolt.

SST 09213–54015 (09214–00030),
09330–00021

Torque: 108 N–m (1,100 kgf–cm, 80 ft–lbf)

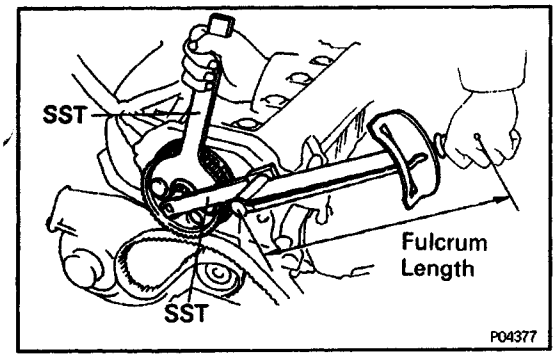

9. INSTALL CAMSHAFT TIMING PULLEY

(a) Align the camshaft knock pin with the knock pin groove of the pulley, and slide on the timing pulley.

(b) Using SST, install the pulley bolt.

SST 09249–63010, 09278–54012

Torque:

54 N–m (550 kgf–cm, 40 ft–lbf)

37 N–m (380 kgf–cm, 27 ft–lbf) for SST

HINT: Use a torque wrench with a fulcrum length of 340 mm (13.39 in.)

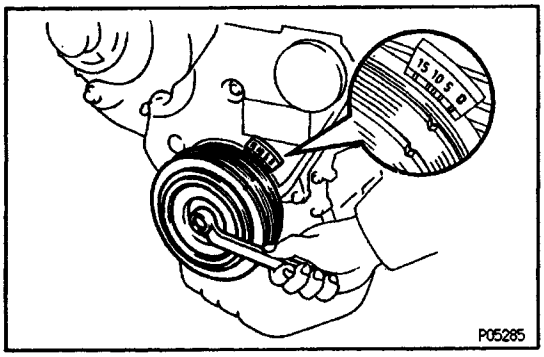

10. SET NO.1 CYLINDER TO TDC/COMPRESSION

(a) Turn the crankshaft pulley, and align its groove with timing mark ”0” of the No.1 timing belt cover.

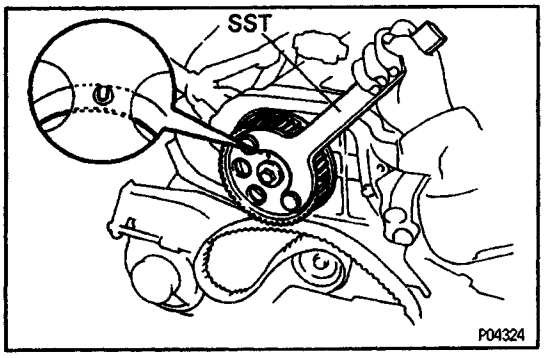

(b) Using SST, turn the camshaft, and align the hole of the camshaft timing pulley with the timing mark of the bearing cap.

SST 09278–54012

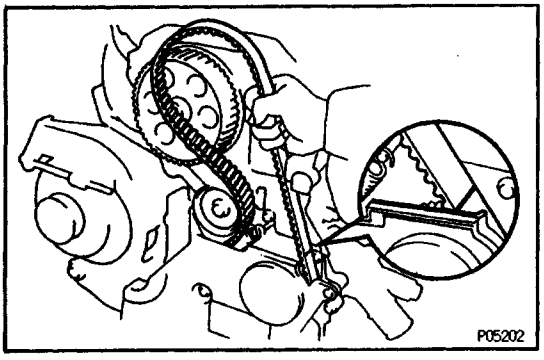

11. INSTALL TIMING BELT

HINT (When re–using timing belt):

- Check that the matchmark on the timing belt matches the en d of the No.1 timing belt cover.

If the matchmark does not align, shift the meshing of the timing belt and crankshaft timing pulley until they align. (See step 19 in Timing Belt Removal)

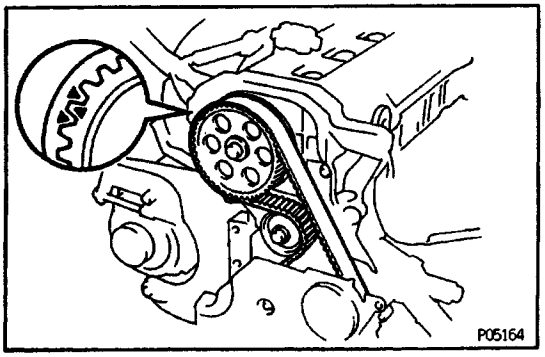

- Align the matchmarks of the timing belt and camshaft timing pulley.

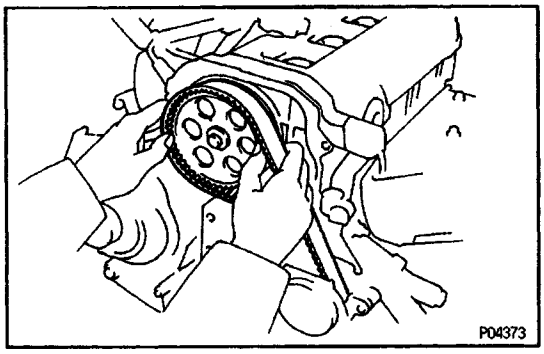

(a) Remove any oil or water on the camshaft timing pulley, and keep it clean.
(b) Install the timing belt, and checking the tension between the crankshaft timing pulley and camshaft timing pulley.

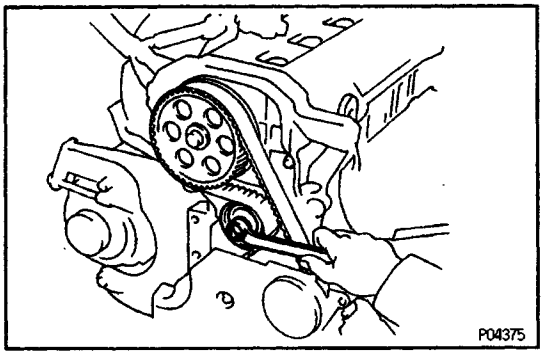

12. CHECK VALVE TIMING
(a) Loosen the No.1 idler pulley bolt 1/2 turn.

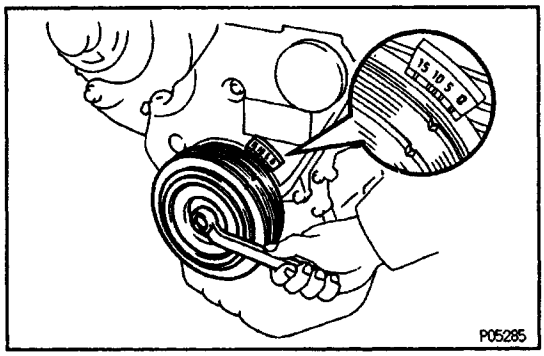

(b) Slowly turn the crankshaft pulley two revolutions TDC to TDC.
NOTICE: Always turn the crankshaft pulley clockwise.

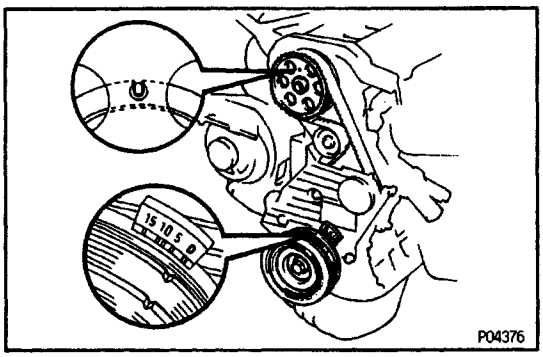

(c) Check that each pulley aligns with the timing marks as shown in the illustration.
If the timing marks do not align, remove the timing belt and reinstall it.

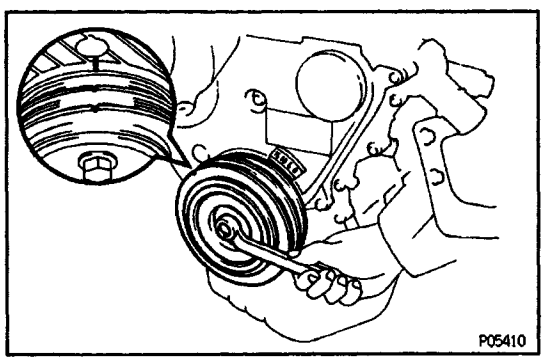

(d) Slowly turn the crankshaft pully 1 and 7/8 revolutions, and align its groove with the mark at 45˚ BTDC (for No.1 cylinder) of the No.1 timing belt cover.
NOTICE: Always turn the crankshaft pulley clockwise.

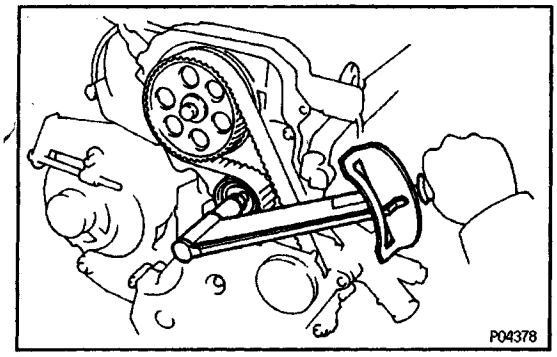

(e) Torque the mounting bolt of the No.1 idler pulley.
Torque: 42 N–m (425 kgf–cm, 31 ft–lbf)

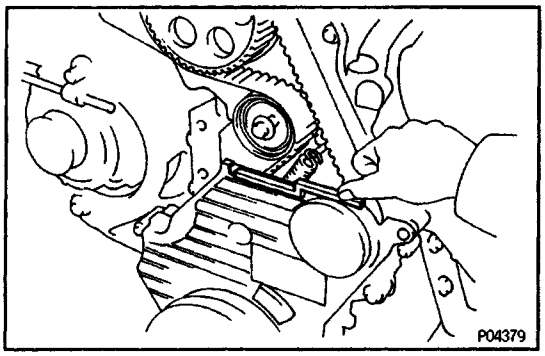

13. INSTALL NO.2 TIMING BELT COVER
(a) Install the gasket to the No.1 timing belt cover.

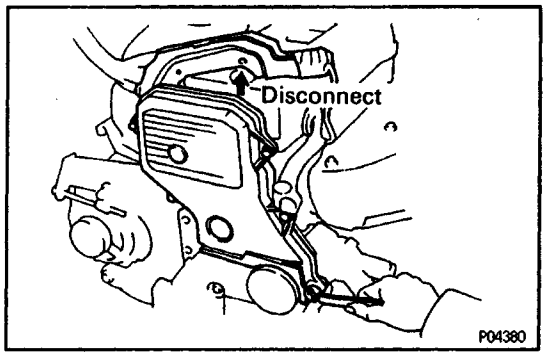

(b) Disconnect the engine wire protector between the No. 3 timing belt cover and cylinder head cover.
(c) Install the belt cover with the five bolts.

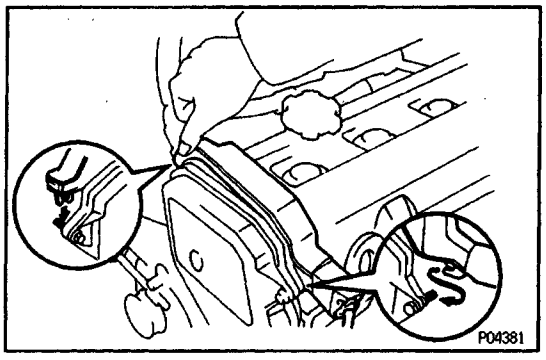

(d) Install the two clamps of the engine wire protector to each bolt.

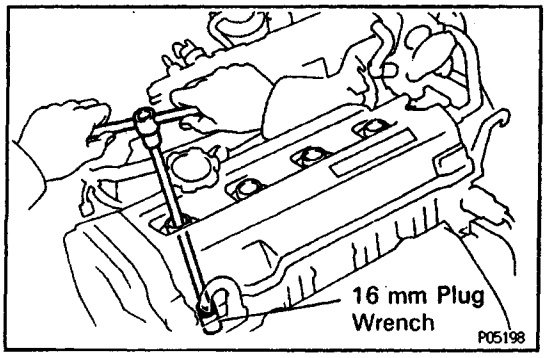

14. INSTALL SPARK PLUGS
(a) Using a 16 mm plug wrench, install the four spark plugs.
(b) Connect the four high–tension cords to the spark plugs.

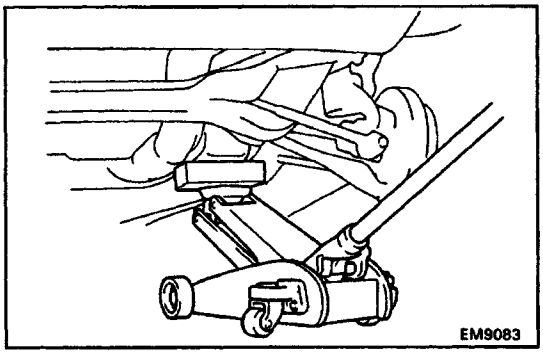

15. INSTALL RH ENGINE MOUNTING BRACKET

(a) Place the mounting bracket in position.

HINT: Raise the engine as far as it will go, and place the mounting bracket in position.

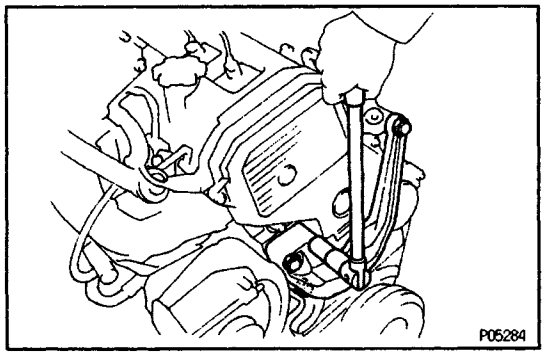

(b) Install the mounting bracket with the four bolts.

Torque: 61 N–m (620 kgf–cm, 45 ft–lbf)

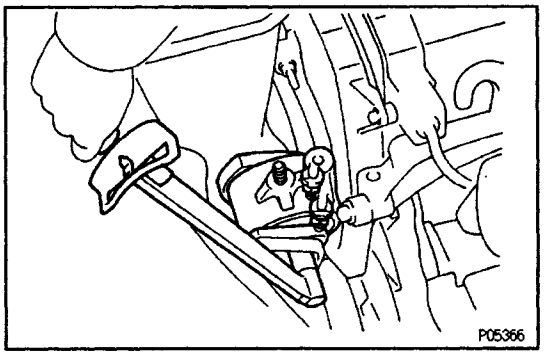

16. INSTALL RH ENGINE MOUNTING INSULATOR

Install the mounting insulator with the through bolt and two nuts.

Torque:

52 N–m (530 kgf–cm, 38 ft–lbf) for nut

78 N–m (800 kgf–cm, 58 ft–lbf) for through bolt

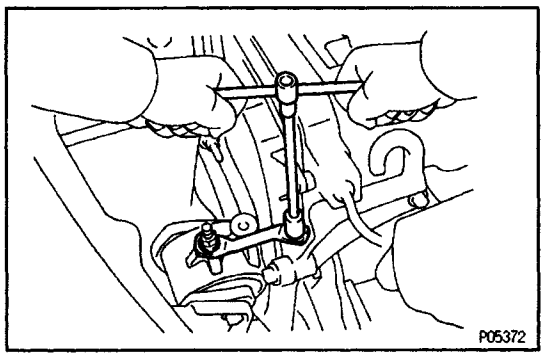

17. INSTALL RH ENGINE MOUNTING STAY

Install the mounting stay with the bolt and nut.

Torque: 73 N–m (740 kgf–cm, 54 ft–lbf)

18. INSTALL RH REAR WHEEL

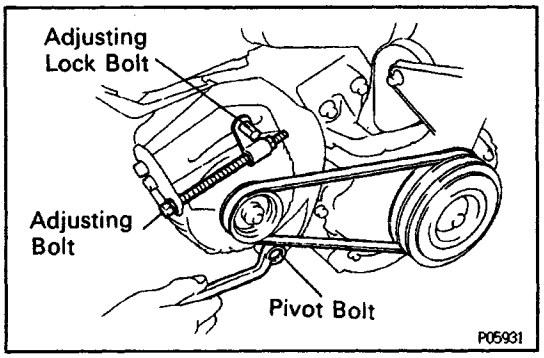

19. INSTALL ALTERNATOR DRIVE BELT

(a) Install the drive belt with the adjusting bolt.

(b) Adjust the drive belt with the adjusting bolt.

(c) Tighten the pivot bolt and adjusting lock bolt.

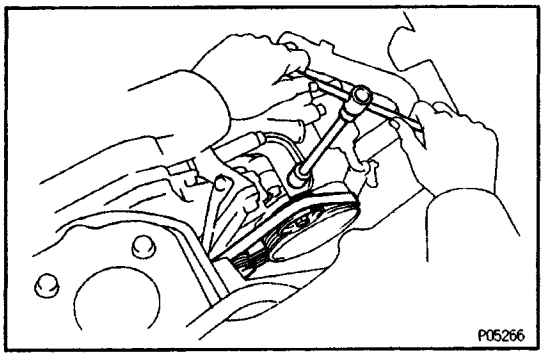

20. INSTALL A/C DRIVE BELT

(a) Install the drive belt with the adjusting bolt.
(b) Tighten the idler pulley bolt.

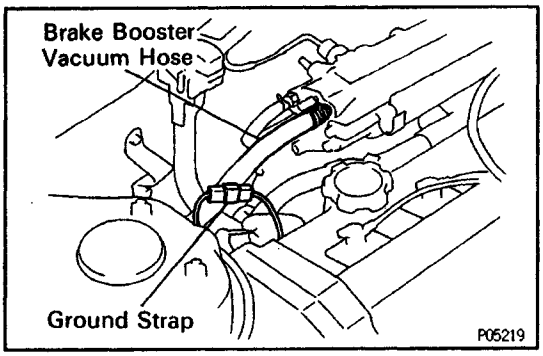

21. CONNECT GROUND STRAP CONNECTOR
22. CONNECT BRAKE BOOSTER HOSE

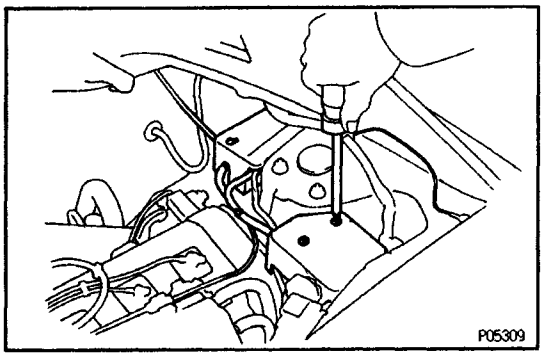

23. (w/ CRUISE CONTROL SYSTEM)
INSTALL CRUISE CONTROL ACTUATOR AND ACCELERATOR LINKAGE

24. INSTALL RH ENGINE HOOD SIDE PANEL
25. INSTALL ENGINE UNDER COVERS
26. CONNECT CABLE TO NEGATIVE TERMINAL OF BATTERY

TROUBLESHOOTING

You will find the source of the trouble more easily by correctly using the table shown below. In this table, each number shows the order of priority of the causes of the trouble. Check each part in the order shown. If necessary, replace the part.

	See page	IG–24	IG–24	EG2–232 EG2–249	EG2–227 EG2–243	EG2–226 EG2–242	EG2–232 EG2–249	EG2–224 EG2–238	EG2–222 EG2–238	EG2–228 EG2–244	–	–	–	EG2–250	EG2–267	EG2–201	EG2–271	EG2–307
	Suspect area	RPM Signal Circuit	Ignition Circuit	Main Oxygen Sensor Circuit	ECTS Circuit	Intake Air Temp. Sensor Circuit	Sub–Oxygen Sensor Circuit	MAP Circuit	Throttle Position Sensor Circuit	STA Signal Circuit	Knock Sensor Circuit	PNS Signal Circuit	A/C Signal Circuit	Fuel Pump	Fuel Pressure Regulator	Fuel Lines	Injectors	Fuel Pressure Control VSV Circuit
Symptom																		
Dose not start	Engine does not crank																	
	Starter runs – engine does not crank																	
	No initial combusion	12	2					5						6				
	No complete combustion				5			2							4		10	
Difficult to start	Engine cranks slowly												2					
	Difficult to start normally	13	14		5	15								8	7	9	17	
	Difficult to start in cold				1	6				2				8	7	9	10	
	Difficult to start in hot				1	6								8	7	9	10	5
Poor idling	Incorrect first idle				2													
	High engine idle speed				2	4			5			7	6				8	
	Low engine idle speed				1			4									5	
	Rough idling		18		3			13						8	7	9	17	
	Misfire		5		7			9									10	
Poor drivability	Hesitation Poor acceleration			13	11	12		10	9					15	14	16	19	
	Backfire			7	4	8		6	5					10	9	11	12	
	Muffler explosion (after fire)			8	3	7		5	6						4		9	
	Surging														2		5	
	Knocking										1							
	Engine stall soon after starting				9			8						4	3	5	10	
	After acceleration pedal depressed							1	3						5	6	7	
	After acceleration pedal released							3										
	During A/C operation												1					
	When N to D shift											1						
Others	Poor fuel economy			20	15	21	22	17	16			18	19				13	14
	Engine overheat										9							
	Engine overcool																	
	Excessive oil consumption																	
	Low oil pressure																	
	High oil pressure																	
	Starter keeps running																	
	Battery often discharge																	

HINT; When inspecting a wire harness or circuit, the electrical wiring diagrams at the end of volume 2 of repair manual should be referred to and the circuits of related systems also should be checked.

V00974

IACV EG2–297	MPI Main Relay EG2–302	Circuit Opening Relay EG2–304	Fuel Cut System EG2–331	Theft Deterrent Control Module BE–1	PC M E (PCME & T) EG2–326	Fuel Quality –	Fuel Leakage –	Coolant Leakage –	Vacuum Leakage –	Oil Leakage –	Starter Relay ST–25	PNS or Clutch Start SW AX–1 CL–1	Starter ST–5	Spark Plug IG–28	Distributor with Ignition Coil IG–30	EG R System EG2–173	Accelerator Pedal Link –	Brakes Drag Even when Released –	Cooling Fan System EG2–367	Clutch CL–1	Compression EG2–26	Valve Clearance EG2–15
				4							1	3	2									
													1									
8	3	4			13	7									1						9	
3										1											6	
													1									
4					18	2				1				3	16	6					10	
5					11	4				3												
4					11	3				2												
3					4												1					
3					9												1					
2					6											3						
10					19	2				1				5	6	4					11	14
					11	2				1				4	6	3					8	
					20	4				1				6	7	5		3		2	8	17
					13					1						2						
			1		10																	
					6					1				3	4							
					10	2								3		4			7			
7					11	2				1						6						
					8									4		2						
1					4											2						
2					3																	
2					3																	
			7		23	2	1							8	9	6	3	5		4	10	
								1						8					2			
																			1			
									1												3	
									1													
											1		2									

V00975

	See page	EG2–42	EG2–37	EG2–345	EG2–67	EG2–399	EG2–117	EG2–120	EG2–66	EG2–129	–	EG2–357	EG2–354	CH–6	EG2–338	BE–1	CH–10	EG2–124
	Suspect area / Symptom	Valve Timing	Timing Belt	Water Pump	Valve Stem Guide Bushing	Oil Pump	Connecting Rod Bearing	Crankshaft Bearing	Cylinder Head	Piston Ring	Flywheel or Drive Plate	Radiator and Radiator Cap	Thermostat	Drive Belt	Engine Coolant and Sender Gauge	Oil Pressure Switch	Alternator	Cylinder Block
Dose not start	Engine does not crank																	
	Starter runs – engine does not crank										2							
	No initial combusion	10	11															
	No complete combusion	8	9							7								
Difficult to start	Engine cranks slowly						3	4										
	Difficult to start normally	12								11								
	Difficult to start in cold																	
	Difficult to start in hot																	
Poor idling	Incorrect first idle																	
	High engine idle speed																	
	Low engine idle speed																	
	Rough idling	15	16						20	12								
	Misfire																	
Poor divability	Hesitation Poor acceleration	18																
	Backfire	3																
	Muffler explosion (after fire	2																
	Surging																	
	Knocking	5		9								6	8					
Engine stall	Engine stall soon after starting																	
	After acceleration pedal depressed																	
	After acceleration pedal released																	
	During A/C operation																	
	When N to D shift																	
Others	Poor fuel economy	12								11								
	Engine overheat	7	5	6		10			11			3	4		13			12
	Engine overcool												2		3			
	Excessive oil consumption				2				5	4								6
	Low oil pressure					2	3	4								5		
	High oil pressure					1										2		
	Starter keeps running																	
	Battery often discharge													1			2	

V00976

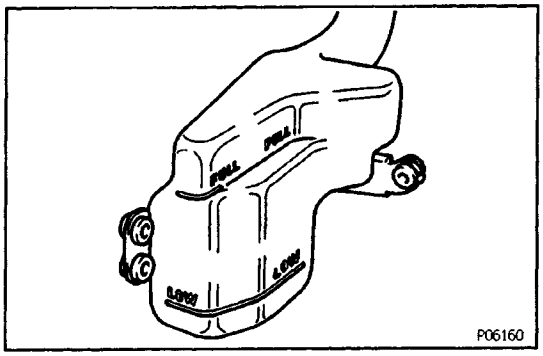

TUNE–UP

ENGINE COOLANT INSPECTION

1. CHECK ENGINE COOLANT LEVEL AT RESERVOIR TANK

The engine coolant level should be between the ” LOW” and ”FULL” lines.
If low, check for leaks and add engine coolant up to the ”FULL” line.

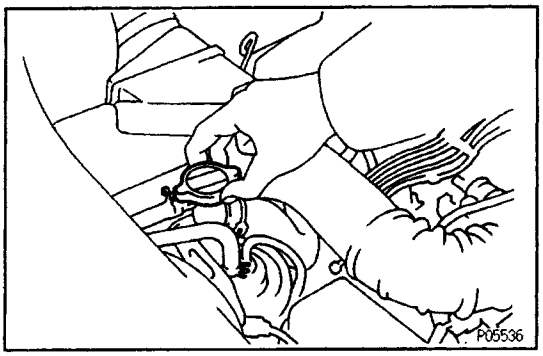

2. CHECK ENGINE COOLANT QUALITY

(a) Remove the radiator (water filler) cap.
CAUTION: To avoid the danger of being burned, do not remove it while the engine and radiator are still hot, as fluid and steam can be blown out under pressure.

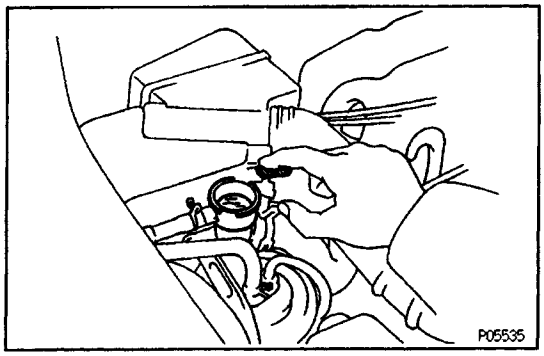

(b) There should not be any excessive deposits of rust or scales around the radiator cap or radiator filler hole, and the coolant should be free from oil.
If excessively dirty, replace the coolant.
(c) Reinstall the radiator (water filler) cap.

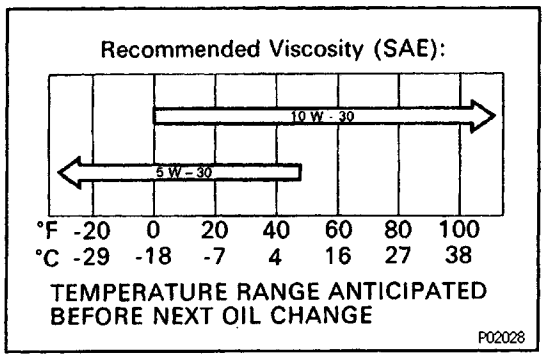

ENGINE OIL INSPECTION

1. CHECK OIL QUALITY

Check the oil for deterioration, entry of water, disco–loring or thinning.
If oil quality is poor, replace the oil.
Oil grade:

API grade SG Energy–Conserving II multigrade engine oil. Recommended viscosity is as shown.

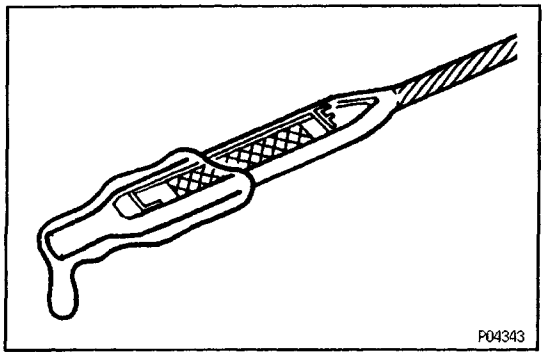

2. CHECK ENGINE OIL LEVEL

The oil level– should be between the ”L” and ”F” marks on the dipstick.
If low, check for leakage and add oil up to the ”F” mark.

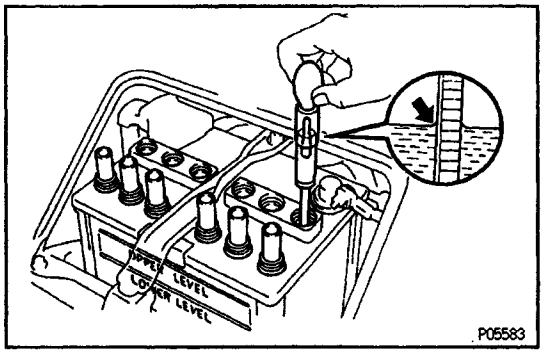

BATTERY INSPECTION

1. CHECK BATTERY SPECIFIC GRAVITY AND ELECTROLYTE LEVEL

(a) Check the electrolyte quantity of each cell.
If insufficient, refill with distilled (or purified) water.
(b) Check the specific gravity of each cell.
Standard specific gravity at 20˚C (68˚F):
1.25 – 1.27
If not within specifications, charge the battery.
HINT: Check the indicator as shown in the illustration.

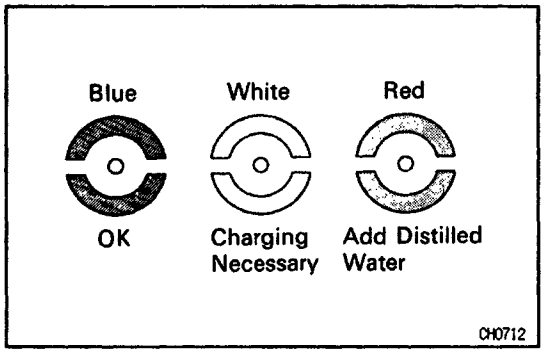

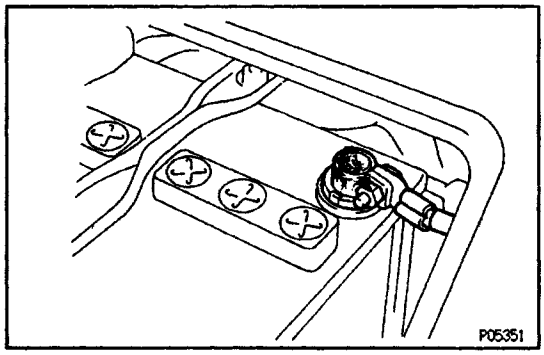

2. CHECK BATTERY TERMINALS, FUSIBLE LINK AND FUSES

(a) Check that the battery terminals are not loose or corroded.
(b) Check the fusible link and fuses for continuity.

AIR FILTER INSPECTION AND CLEANING

1. REMOVE AIR FILTER

Remove the air cleaner cap and air filter.

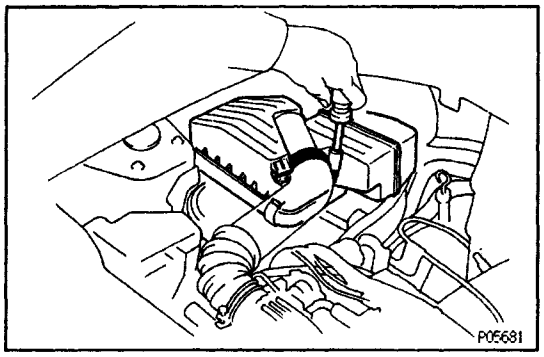

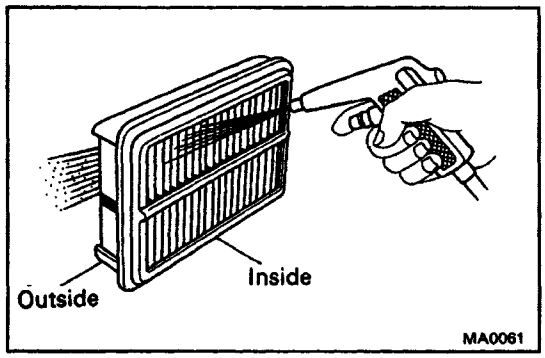

2. INSPECT AND CLEAN AIR FILTER

(a) Visually check that the air filter is not excessively damaged or only.
If necessary, replace the air filter.
(b) Clean the air filter with compressed air.
First blow from the insidethoroughly, then blow off the outside of the air filter.

3. REINSTALL AIR FILTER

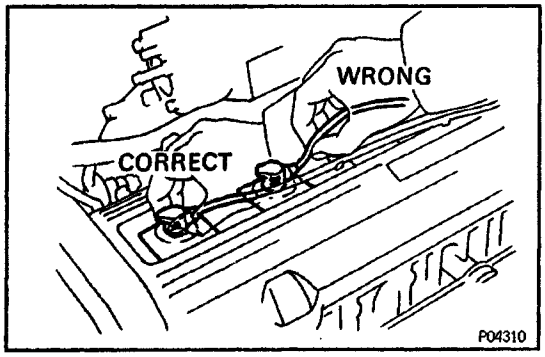

HIGH–TENSION CORDS INSPECTION

1. DISCONNECT HIGH–TENSION CORDS FROM SPARK PLUGS

Disconnect the high – tension cords at the rubber boot. Do not pull on the cords.

NOTICE: Pulling on or bending the cords may damage the conductor inside.

2. REMOVE DISTRIBUTOR CAP WITHOUT DISCONNECTING HIGH–TENSION CORDS

3. INSPECT HIGH–TENSION CORD RESISTANCE

Using an ohmmeter, measure the resistance without disconnecting the distributor cap.

Maximum resistance:

25 k Ω per cord

If the resistance is greater than maximum, check the terminals. If necessary, replace the high–tension cord and/or distributor cap.

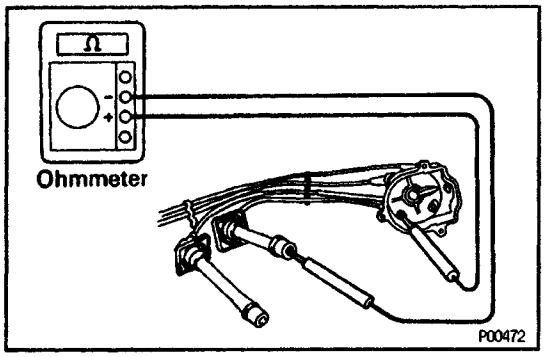

4. REINSTALL DISTRIBUTOR CAP AND HIGH–TENSION CORDS

5. RECONNECT HIGH–TENSION CORDS TO SPARK PLUGS

ALTERNATOR DRIVE BELT INSPECTION

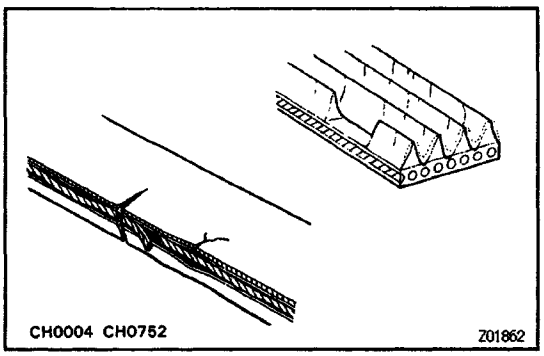

INSPECT DRIVE BELTS

(a) Visually check the belt for excessive wear, frayed cords etc.

If necessary, replace the drive belt.

HINT: Cranks on the rib side of a belt are considered acceptable. If the belt has chunks missing from the ribs, it should be replaced.

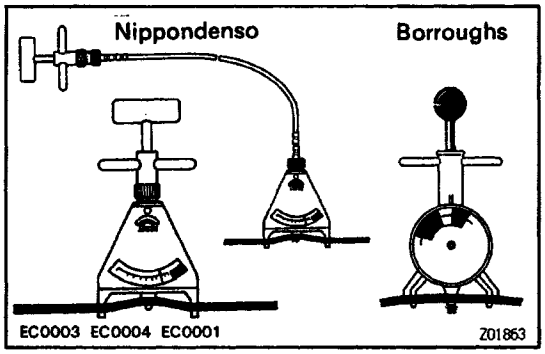

(b) Using a belt tension gauge, measure the belt tension.

Belt tension gauge:

Nippondenso BTG–20 (95506–00020)

Borroughs No. BT–33–73F

Drive belt tension:

New belt

120 ± 20 lbf

Used belt

104 ± 20 lbf

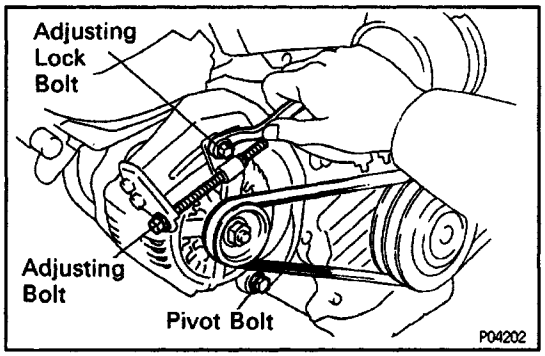

If necessary, adjust the belt tension.

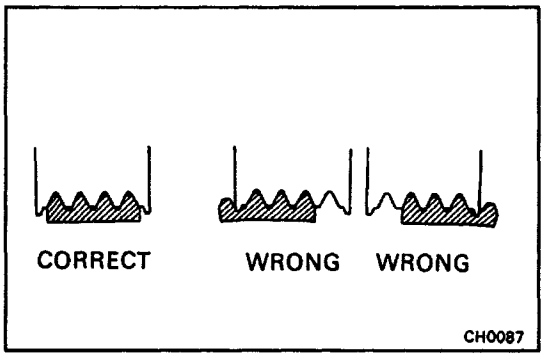

HINT:

- ”New belt” refers to a belt which has been used less than 5 minutes on a running engine.
- ”Used belt” refers to a belt which has been used on a running engine for 5 minutes or more.
- After installing the belt, check that it fits properly in the ribbed grooves.
  Check by hand to confirm that the belt has not slipped out of the groove on the bottom of the pulley.
- After installing a new belt, run the engine for about 5 minutes and recheck the belt tension.

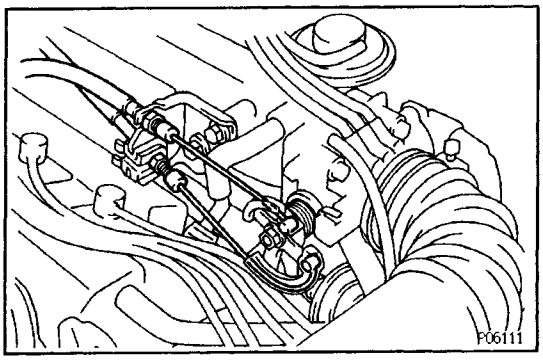

VALVE CLEARANCE INSPECTION AND ADJUSTMENT

HINT: Inspect and adjust the valve clearance when the engine is cold.

1. DISCONNECT ACCELERATOR CABLE FROM ACCELERATOR BRACKET

2. (A/T)
DISCONNECT THROTTLE CABLE FROM ACCELERATOR BRACKET

3. REMOVE CYLINDER HEAD COVER

(a) Disconnect the high – tension cords at the rubberboot. Do not pull on the high–tension cords.

NOTICE: Pulling on or bending the cords may damage the conductor inside.

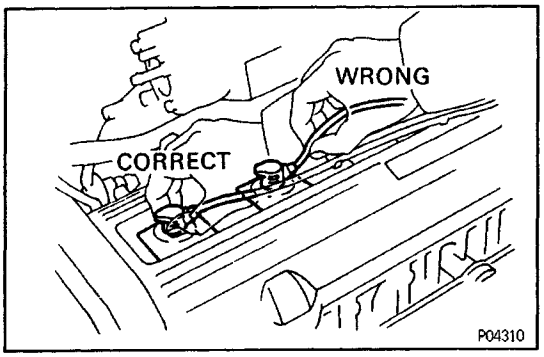

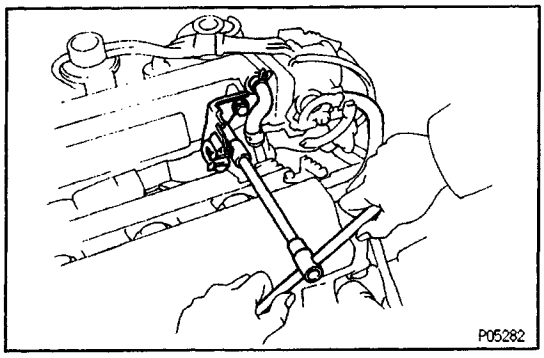

(b) Remove the two bolts and accelerator bracket.

(c) Disconnect the PCV hose from the intake manifold.

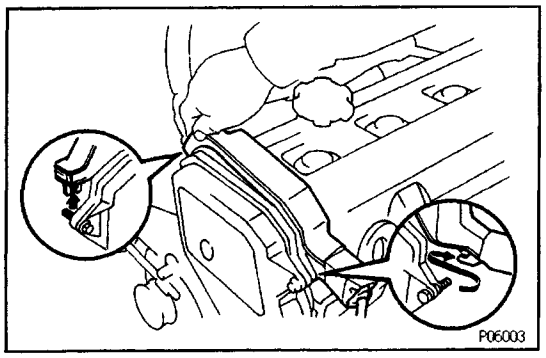

(d) Disconnect the engine wire protector between the No. 3 timing belt cover and cylinder head cover.

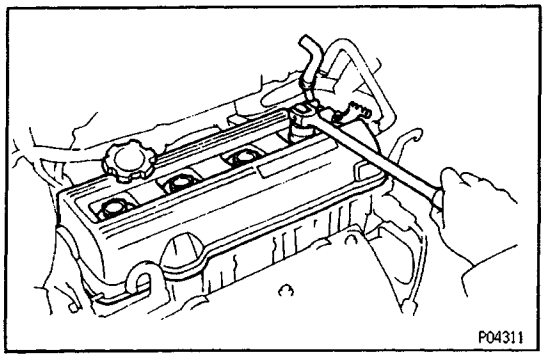

(e) Remove the four nuts, grommets, cylinder head cover and gasket.

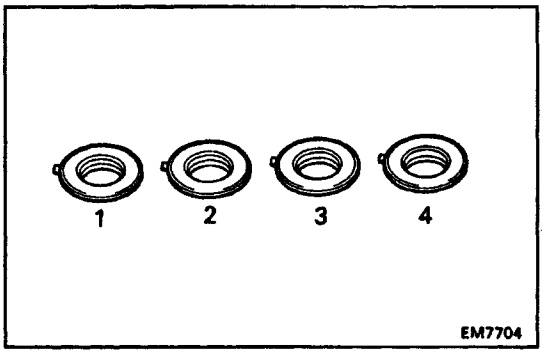

HINT: Arrange the grommets in correct order, so that they can be reinstalled into their original positions. This minimizes any possibility of oil leakage due to reuse of grommets.

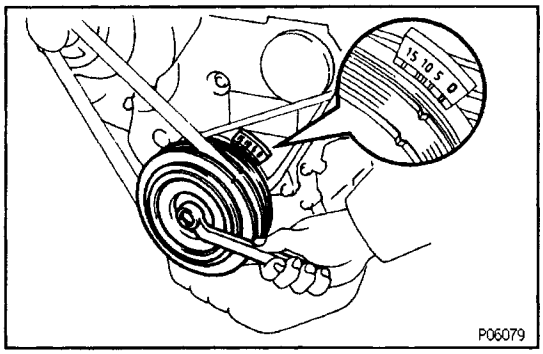

4. SET NO.1 CYLINDER TO TDC/COMPRESSION

(a) Turn the crankshaft pulley and align its groove with timing mark ”0” of the No.1 timing belt cover.

(b) Check that the valve lifters on the No.1 cylinder are loose and valve lifters on the No.4 are tight.

If not, turn the crankshaft one revolution (360’*) and align the mark as above.

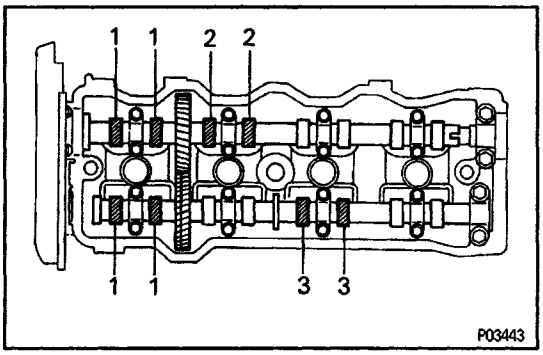

5. INSPECT VALVE CLEARANCE

(a) Check only the valves indicated.

Using a feeler gauge, measure the clearance be–tween the valve lifter and camshaft.

Record the out – of – specification valve clear–ance measurements. They will be used later to determine the required replacement adjusting shim.

Valve clearance (Cold):

Intake

0.19 – 0.29 mm (0.007 – 0.011 in.)

Exhaust

0.28 – 0.38 mm (0.011 – 0.015 in.)

(b) Turn the crankshaft one revolution (360˚) and align the mark as above. (See procedure in step 8)

(c) Check only the valves indicated as shown. Measure the valve clearance. (See procedure in step (a))

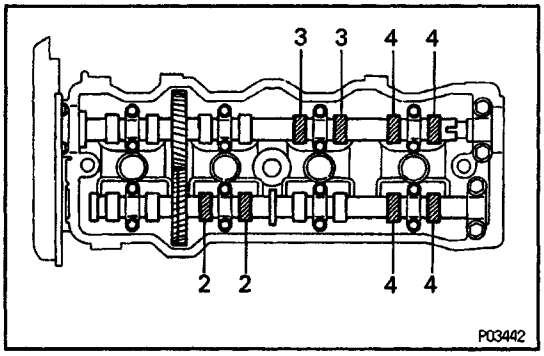

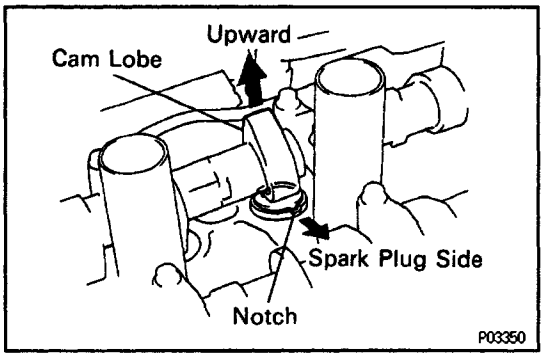

6. ADJUST VALVE CLEARANCE

(a) Remove the adjusting shim.

- Turn the crankshaft so that the cam lobe of the camshaft on the adjusting valve upward.
- Position the notch of the valve lifter facing the spark plug side.

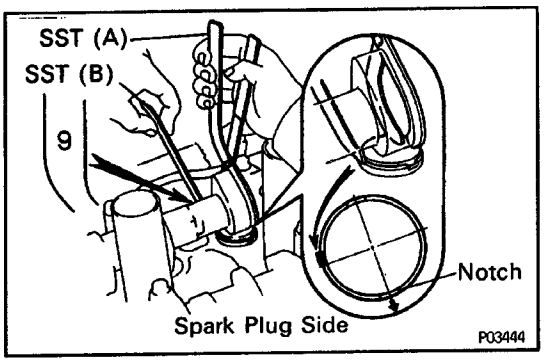

Using SST (A), press down the valve lifter and place SST (B) between the camshaft and valve lifter. Remove SST (A).
SST 09248–55020 (09248–05011, 09248–05021)
HINT: Apply SST (B) at slight angle on the side marked with ”9”, at the position shown in the illustration.

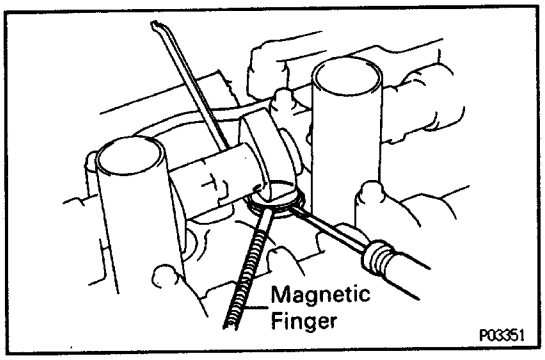

Remove the adjusting shim with a small screw–driver and magnetic finger.

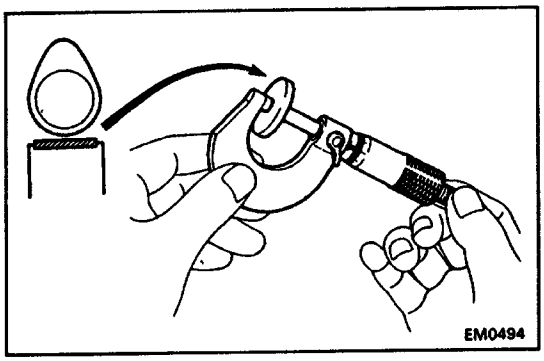

(b) Determine the replacement adjusting shim size by following the Formula or Charts:

- Using a micrometer, measure the thickness of the removed shim.
- Calculate the thickness of a new shim so that the valve clearance comes within specified value.
  T ..... Thickness of removed shim
  A ..... Measured valve clearance
  N ..... Thickness of new shim

Intake:

N = T + E (A – 0.24 mm (0.009 in.))

Exhaust:

N = T + (A – 0.33 mm (0.013 in.))

- Select a new shim with a thickness as close as possible to the calculated value.

HINT: Shims are available in seventeen sized in in–crements of 0.05 mm (0.0020 in.), from 2.50 mm (0.0984 in.) to 3.30 mm (0.1299 in.).

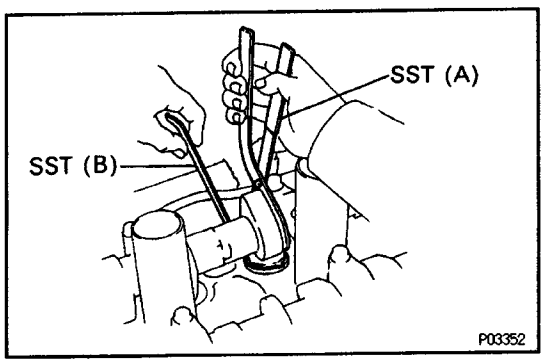

(c) Install a new adjusting shim.

- Place a new adjusting shim on the valve lifter.
- Using SST (A), press down the valve lifter and remove SST (B).
  SST 09248–55020 (09248–05011, 09248–05021)

(d) Recheck the valve clearance.

Adjusting Shim Selection Chart (Intake)

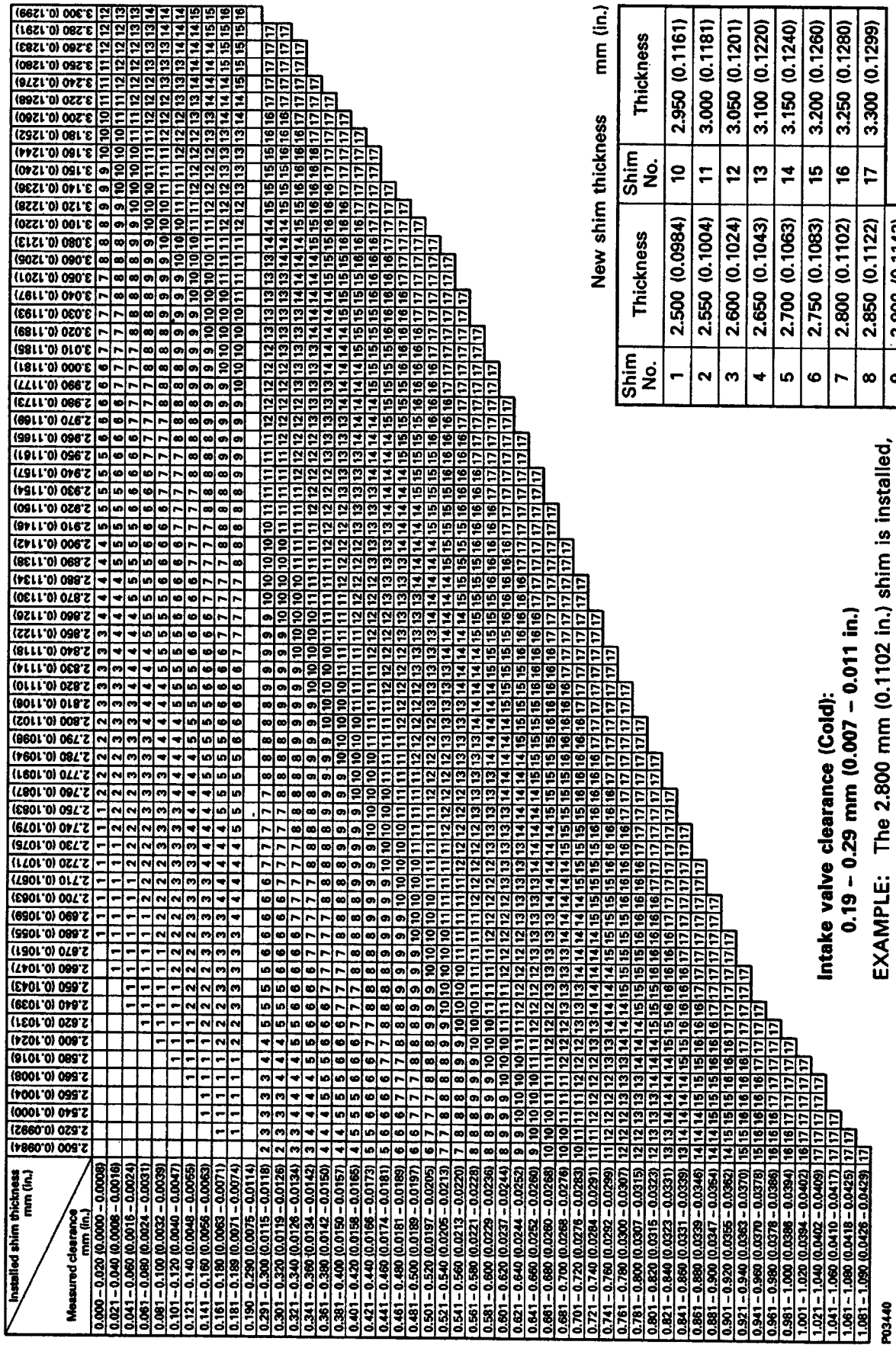

Intake valve clearance (Cold):
0.19 – 0.29 mm (0.007 – 0.011 in.)

EXAMPLE: The 2.800 mm (0.1102 in.) shim is installed, and the measured clearance is 0.450 mm (0.0177 in.). Replace the 2.800 mm (0.1102 in.) shim with a new No.11 shim.

New shim thickness mm (in.)

Shim No.	Thickness	Shim No.	Thickness
1	2.500 (0.0984)	10	2.950 (0.1161)
2	2.550 (0.1004)	11	3.000 (0.1181)
3	2.600 (0.1024)	12	3.050 (0.1201)
4	2.650 (0.1043)	13	3.100 (0.1220)
5	2.700 (0.1063)	14	3.150 (0.1240)
6	2.750 (0.1083)	15	3.200 (0.1260)
7	2.800 (0.1102)	16	3.250 (0.1280)
8	2.850 (0.1122)	17	3.300 (0.1299)
9	2.900 (0.1142)		

HINT: New shims have the thickness in millimeters imprinted on the face.

V00867

Adjusting Shim Selection Chart (Exhaust)

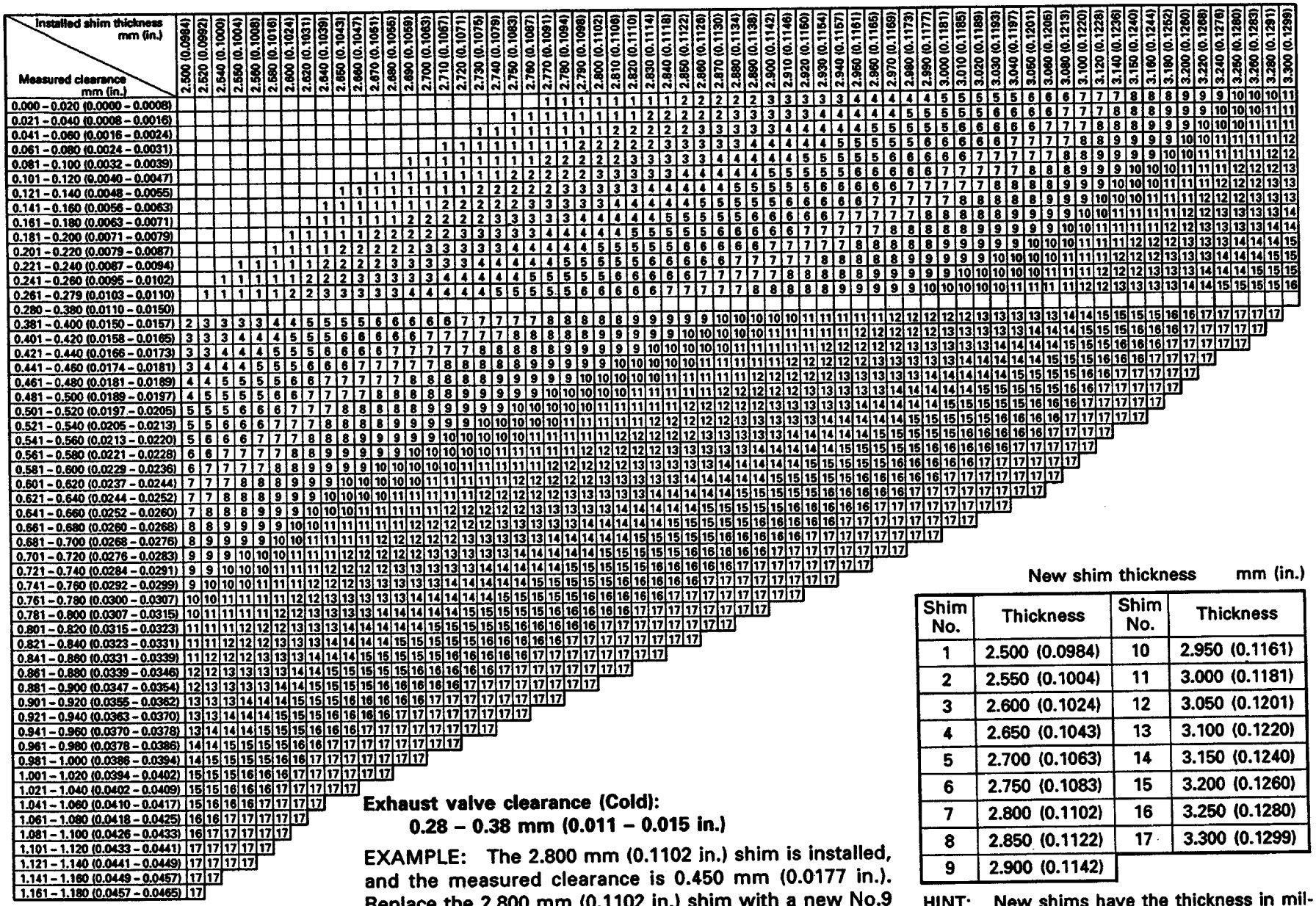

P03441

Exhaust valve clearance (Cold):

0.28 – 0.38 mm (0.011 – 0.015 in.)

EXAMPLE: The 2.800 mm (0.1102 in.) shim is installed, and the measured clearance is 0.450 mm (0.0177 in.). Replace the 2.800 mm (0.1102 in.) shim with a new No.9 shim.

New shim thickness mm (in.)

Shim No.	Thickness	Shim No.	Thickness
1	2.500 (0.0984)	10	2.950 (0.1161)
2	2.550 (0.1004)	11	3.000 (0.1181)
3	2.600 (0.1024)	12	3.050 (0.1201)
4	2.650 (0.1043)	13	3.100 (0.1220)
5	2.700 (0.1063)	14	3.150 (0.1240)
6	2.750 (0.1083)	15	3.200 (0.1260)
7	2.800 (0.1102)	16	3.250 (0.1280)
8	2.850 (0.1122)	17	3.300 (0.1299)
9	2.900 (0.1142)		

HINT: New shims have the thickness in millimeters imprinted on the face.

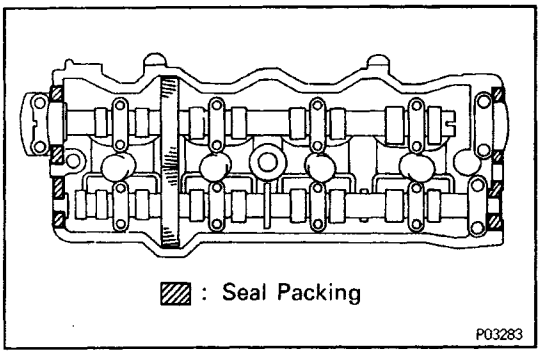

7. INSTALL CYLINDER HEAD COVER

(a) Remove any old packing (FIPG) material.

(b) Apply seal packing to the cylinder head as shown in the illustration.

Seal packing:

Part No. 08826–00080 or equivalent

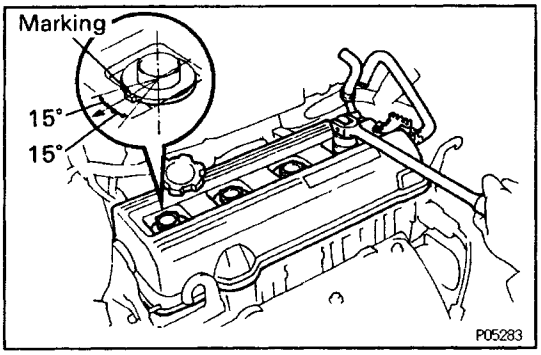

(c) Install the gasket to the cylinder head cover.

(d) Install the cylinder head cover with the four grommets and nuts.

Torque: 23 N–m (230 kgf–cm, 17 ft–lbf)

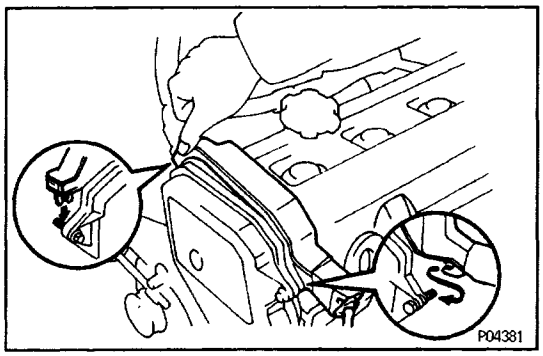

(e) Install the two clamps of the engine wire protector to the each bolts.

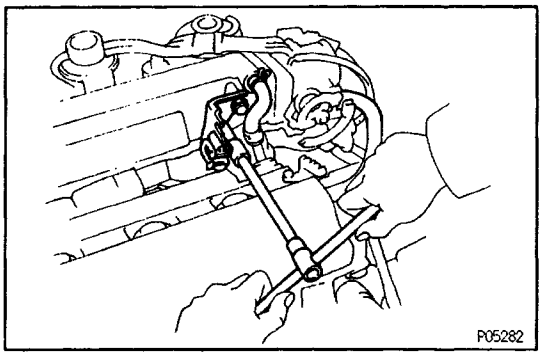

(f) Connect the PCV hose to the intake manifold.

(g) Install the accelerator bracket with the two bolts.

(h) Connect the four high–tension cords to the spark plugs.

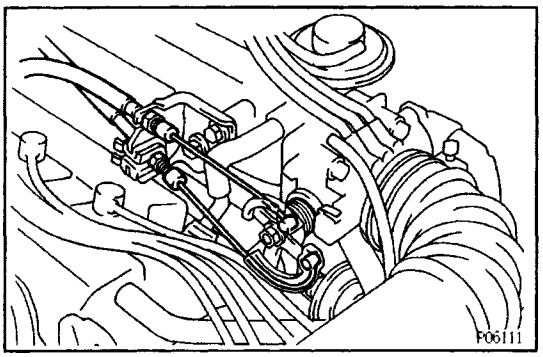

8. INSTALL ACCELERATOR CABLE TO ACCELERATOR BRACKET

9. INSTALL THROTTLE CABLE TO ACCELERATOR BRACKET

IGNITION TIMING INSPECTION AND ADJUSTMENT

1. REMOVE RH ENGINE HOOD SIDE PANEL

2. WARM UP ENGINE

Allow the engine to warm up to normal operating temperature.

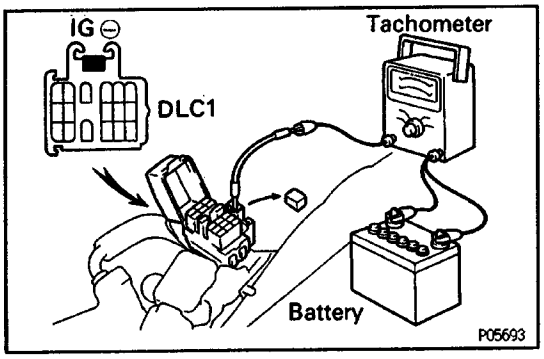

3. CONNECT TACHOMETER AND TIMING. LIGHT TO ENGINE

Connect the test probe of a tachometer to terminal IG (–) of the data link connector 1.

NOTICE:

Never allow the tachometer terminal to touch ground as it could result in damage to the igniter and/or ignition coil.

- As some tachometers are not compatible with this ignition system, we recommend that you confirm the compatibility of your unit before use.

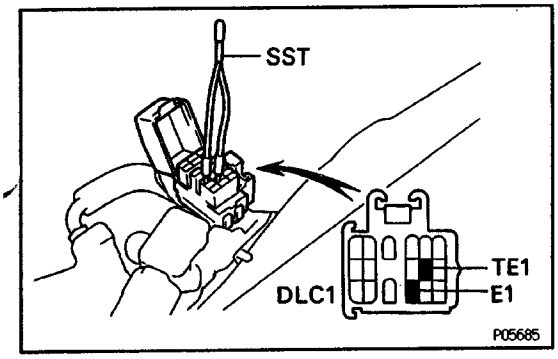

4. ADJUST IGNITION TIMING

(a) Using SST, connect terminals TE1 and E1 of the the data link connector 1.

SST 09843–18020

HINT: After engine rpm is kept at 1,000 – 1,300 rpm for 5 seconds, check that it returns to idle speed.

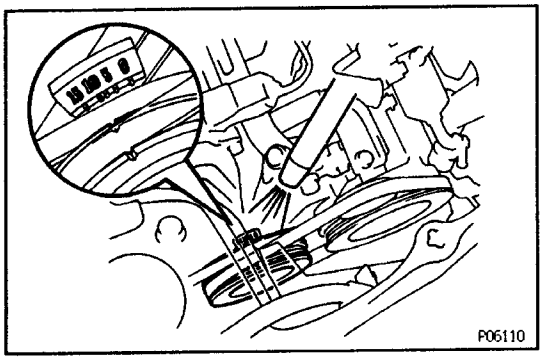

(b) Using a timing light, check the ignition timing.

Ignition timing:

10° BTDC @ idle

(Transmission in neutral position)

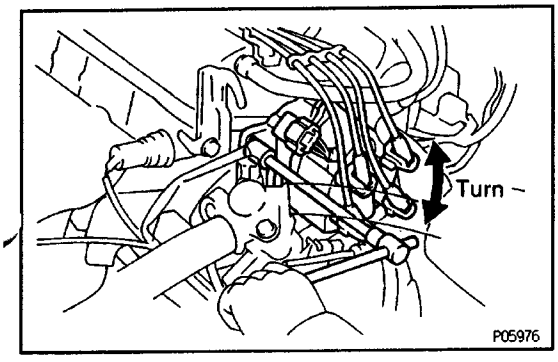

(c) Loosen the two hold–down bolts, and adjust by turning the distributor.

(d) Tighten the two hold–down bolts, and recheck the ignition timing.

Torque: 19 N–m (195 kgf–cm, 14 ft–lbf)

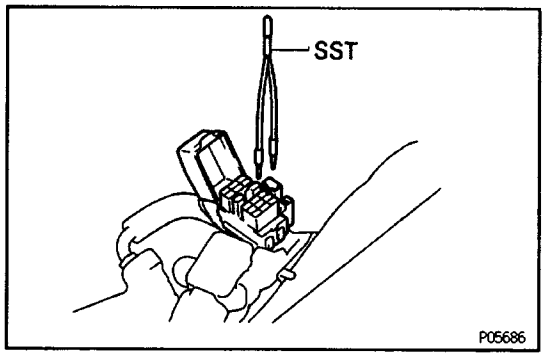

(e) Remove the SST from the data link connector 1.
SST 09843–18020

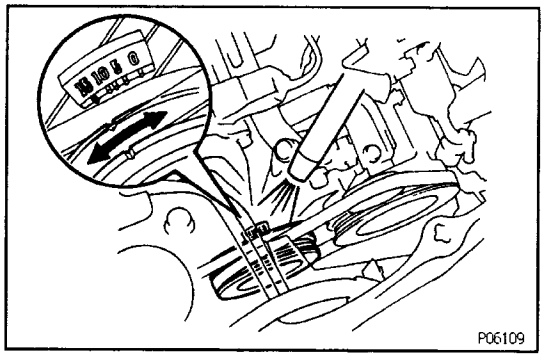

5. FURTHER CHECK IGNITION TIMING
Ignition timing:
13 – 22˚ BTDC @ idle
(Transmission in neutral position)
HINT: The timing mark moves in a range between 13˚ and 22˚.

6. DISCONNECT TACHOMETER AND TIMING LIGHT FROM ENGINE
7. REINSTALL RH ENGINE HOOD SIDE PANEL

IDLE SPEED INSPECTION

1. INITIAL CONDITIONS

(a) Engine at normal operating temperature
(b) Air cleaner installed
(c) All pipes and hoses of air induction system connected
(d) All accessories switched OFF
(e) All vacuum lines properly connected

HINT: All vacuum hoses for EGR systems, etc. should be properly connected.

(f) MPI system wiring connectors fully plugged
(g) Ignition timing set correctly
(h) Transmission in neutral position

2. CONNECT TACHOMETER

(See step 2 in Ignition Timing Inspection and Adjustment)

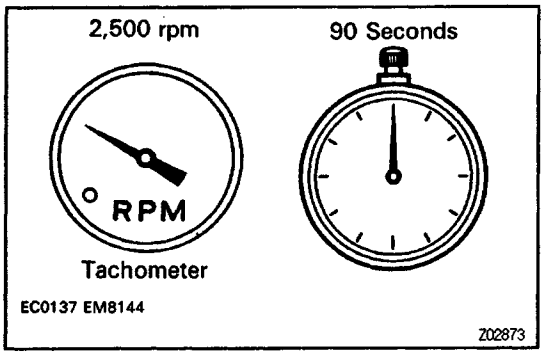

3. INSPECT IDLE SPEED

(a) Race the engine speed at 2,500 rpm for approx. 90 seconds.

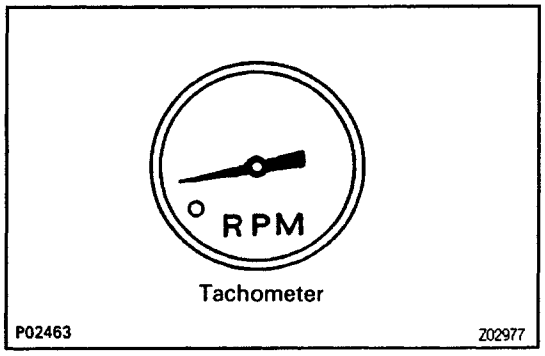

(b) Check the idle speed.

Idle speed:

750 ± 50 rpm for USA M/T
700 ± 50 rpm for USA A/T
850 ± 50 rpm for CANADA M/T

If the idle speed is not as specified, check the IACV.

4. DISCONNECT TACHOMETER

SERVICE SPECIFICATIONS

SERVICE DATA

EG07L–04

Thermostat	Valve opening temperature	80 – 84°C (176 – 183°F)
	Valve lift (at 95°C (203°F))	8 mm (0.31 in.) or more
Radiator cap	Relief valve opening pressure (STD)	74 – 103 kPa (0.75 – 1.05 kgf/cm², 10.7 – 14.9 psi)
	Relief valve opening pressure (Limit)	59 kPa (0.6 kgf/cm², 8.5 psi)
Radiator electric cooling fan	Rotating amperage (M/T)	5.8 – 7.4 A
	Rotating amperage (A/T)	8.8 – 10.8 A
ECTS	Resistance (at 85°C (185°F))	Approx. 1.35 kΩ
	Resistance (at 90°C (194°F))	Approx. 1.19 kΩ
	Resistance (at 95°C (203°F))	Approx. 1.05 kΩ

TORQUE SPECIFICATIONS

EG07M–04

Part tightened	N·m	kgf·cm	ft·lbf
Cylinder block x Drain plug	25	250	18
Radiator pipe x Drain plug	17	170	12
Water pump x Water pump cover	8.8	90	78 in.·lbf
Water pump x Cylinder block (10 mm head)	8.8	90	78 in.·lbf
Water pump x Cylinder block (12 mm head)	27	275	20 in.·lbf
Water by–pass pipe x Water pump cover	9.3	95	82 in.·lbf
No.2 idler pulley x Cylinder block	42	425	31
Water inlet x Water pump cover	8.8	90	78 in.·lbf
Radiator support bolt	13	130	9

LUBRICATION SYSTEM

DESCRIPTION

EG14Q–01

A fully pressurized, fully filtered lubrication system has been adopted for this engine.

OPERATION

EG14R–01

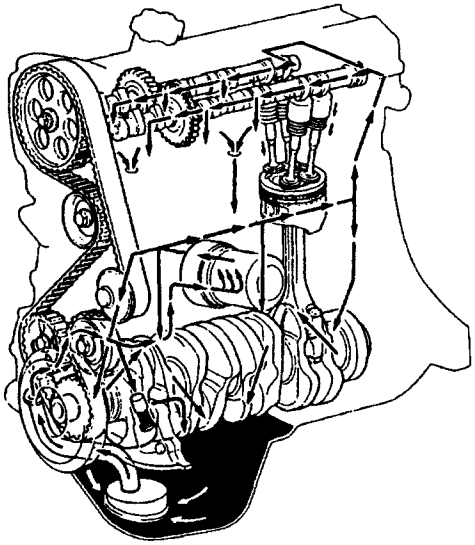

LU0910

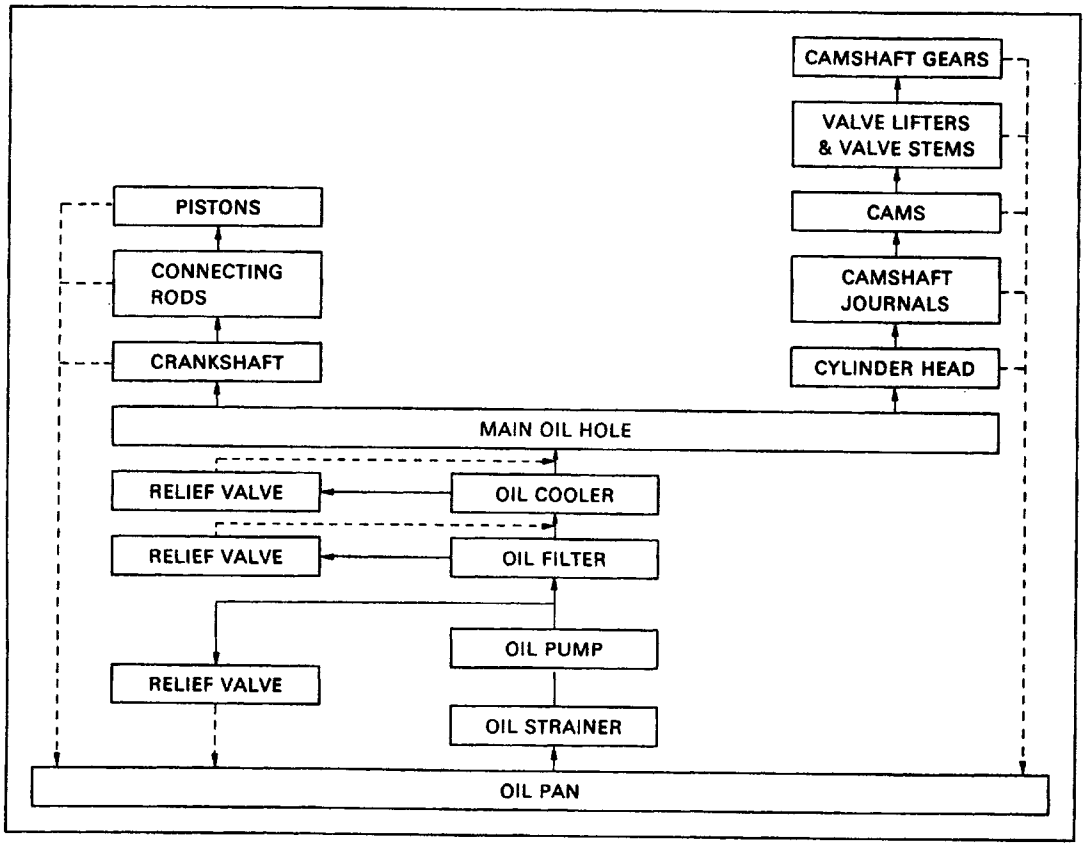

Z02934

OIL AND FILTER REPLACEMENT

CAUTION: EG1S0–01

Prolonged and repeated contact with mineral oil will result in the removal of natural fats from the skin, leading to dryness, irritation and dermatitis. In addition, used engine oil contains potentially harmful contaminants which may cause skin cancer.
Care should be taken, therefore, when changing engine, oil to minimize the frequency and length of time your skin is exposed to used engine oil. Protective clothing and gloves that cannot be penetrated by oil should be worn. The skin should be thoroughly washed with soap and water, or use water – less hand cleaner, to remove any used engine oil. Do not use gasoline, thinners, or solvents.
In order to preserve the environment, used oil and used oil filter must be disposed of only at designated disposal sites.

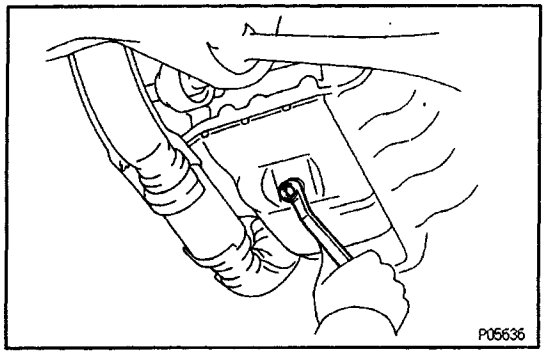

1. DRAIN ENGINE OIL

(a) Remove the oil filler cap.
(b) Remove the oil drain plug, and drain the oil into a container.

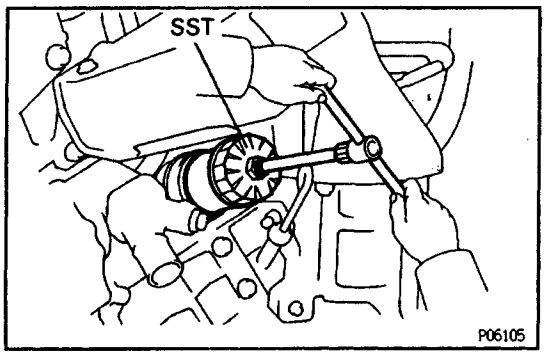

2. REPLACE OIL FILTER

(a) Using SST, remove the oil filter.
SST 09228–06500

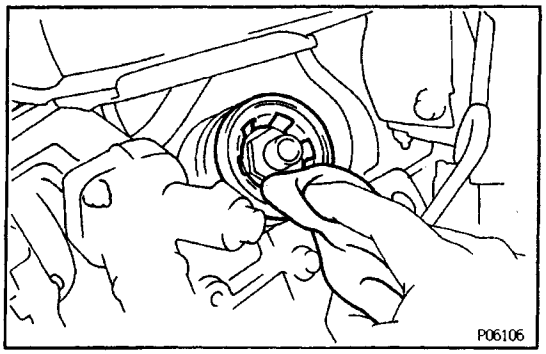

(b) Clean the oil filter contact surface on the oil filter mounting.

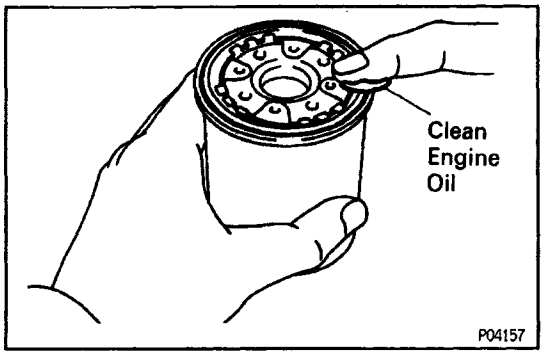

(c) Lubricate the filter rubber gasket with clean engine oil.

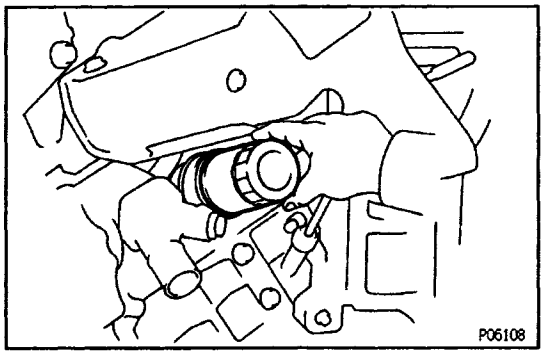

(d) Tighten the oil filter by hand until the rubber gasket contacts the seat of the filter mounting.

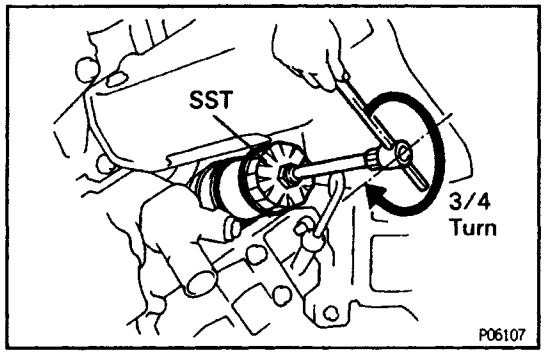

(e) Using SST, give it an additional 3/4 turn to seat the filer.
SST 09228–06500

3. FILL WITH ENGINE OIL

(a) Clean and install the oil drain plug with a new gasket.
Torque: 39 N–m (400 kgf–cm, 29 ft–lbf)

(b) Fill with new engine oil.
Oil grade: (See step 1 Oil Pressure Check)
Capacity:
Drain and refill
w/ Oil filter change
4.2 liters (4.4 US qts. 3.7 Imp. qts)
w/o Oil filter change
3.8 liters (4.0 US qts, 3.3 Imp. qts)
Dry fill
4.6 liters (4.9 US qts, 4.0 Imp. qts)

(c) Reinstall the oil filler cap.

4. START ENGINE AND CHECK FOR OIL LEAKS

5. RECHECK ENGINE OIL LEVEL

OIL COOLER

EG15E–01

COMPONENTS FOR REMOVAL AND INSTALLATION

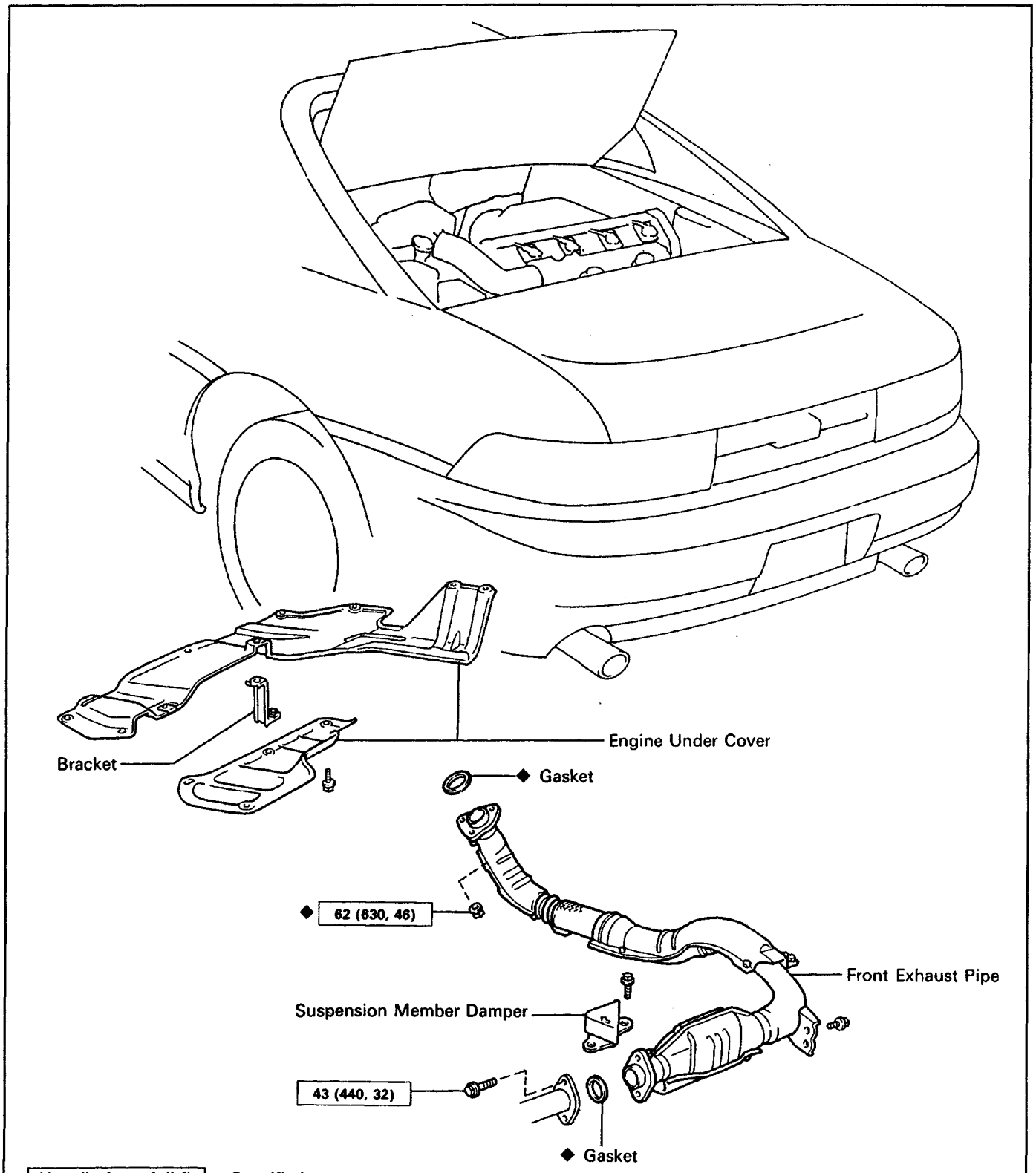

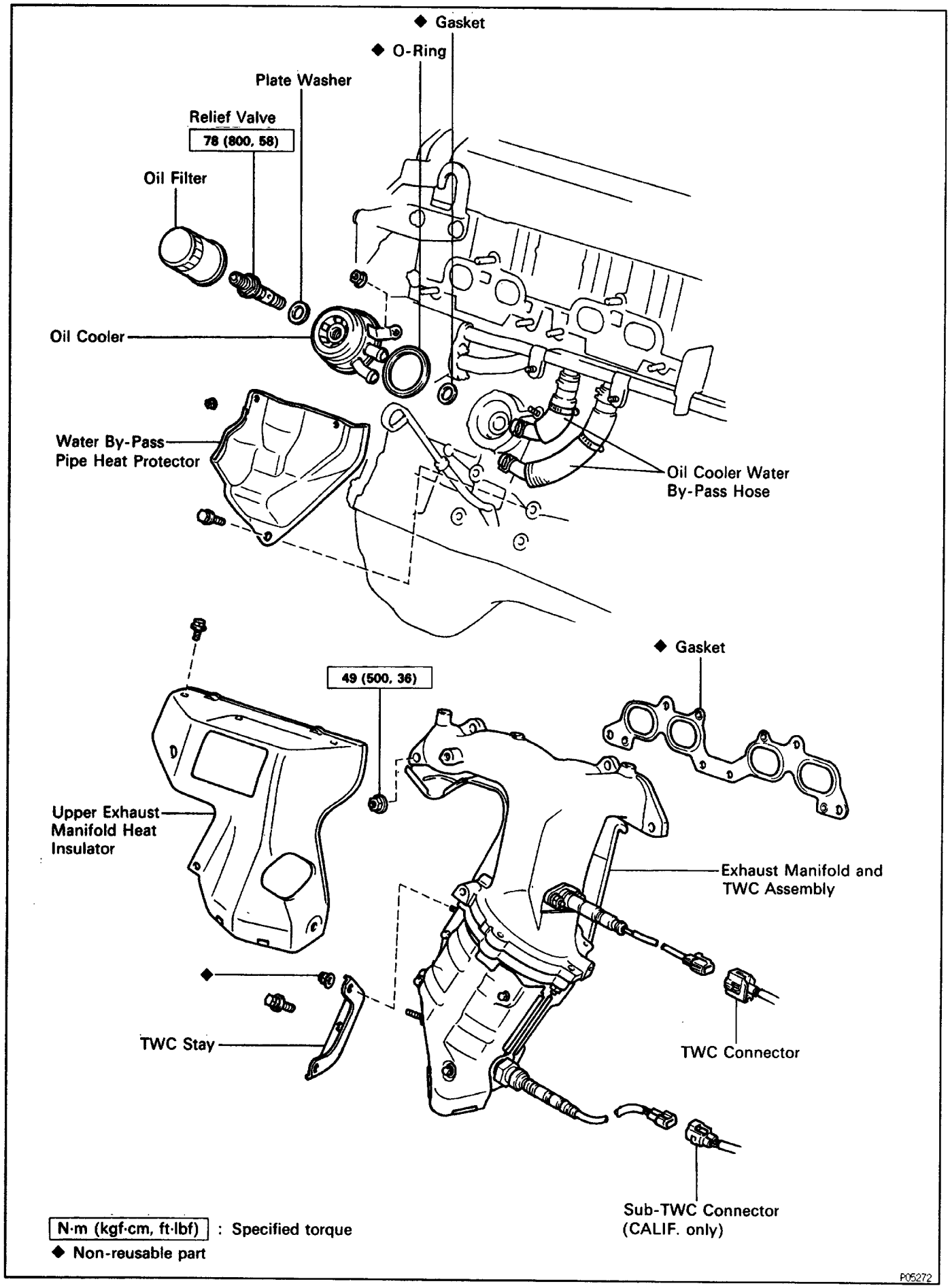
◆ Gasket
◆ O-Ring
Plate Washer
Relief Valve
78 (800, 58)
Oil Filter
Oil Cooler
Water By-Pass Pipe Heat Protector
Oil Cooler Water By-Pass Hose
◆ Gasket
49 (500, 36)
Upper Exhaust Manifold Heat Insulator
Exhaust Manifold and TWC Assembly
TWC Stay
TWC Connector
Sub-TWC Connector (CALIF. only)
N·m (kgf·cm, ft·lbf) : Specified torque
◆ Non-reusable part
P05272

EG15F–01

OIL COOLER REMOVAL

(See Components for Removal and Installation)

1. DISCONNECT CABLE FROM NEGATIVE TERMINAL OF BATTERY

CAUTION: Turn the ignition switch to "LOCK". Disconnect the negative terminal from the battery. Wait at least 20 seconds before proceeding with work.

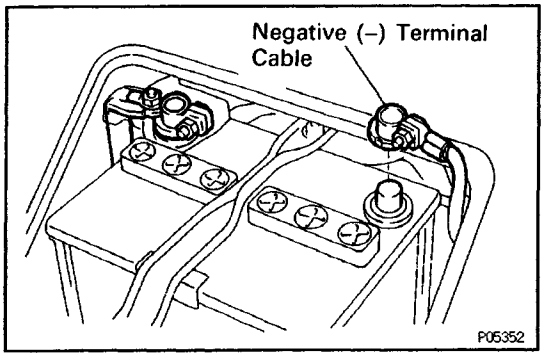

2. REMOVE ENGINE UNDER COVERS

3. DRAIN ENGINE COOLANT

4. REMOVE FRONT EXHAUST PIPE

(a) (CALIF. only)
Remove the two bolts and damper.

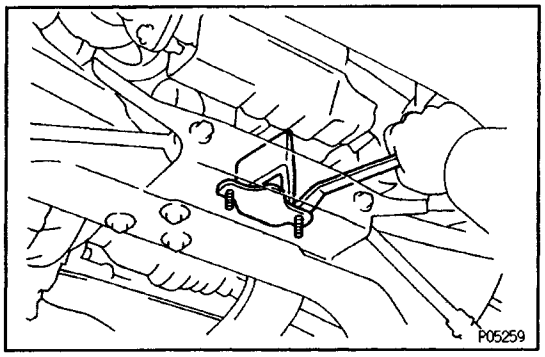

(b) Remove the two bolts holding the front exhaust pipe bracket to the tailpipe bracket.
(c) Remove the two bolts holding the front exhaust pipe to the tailpipe.
(d) Using a 14 mm deep socket wrench, remove the three nuts holding the front exhaust pipe to the TWC.
(e) Remove the front exhaust pipe.
(f) Remove the two gaskets.

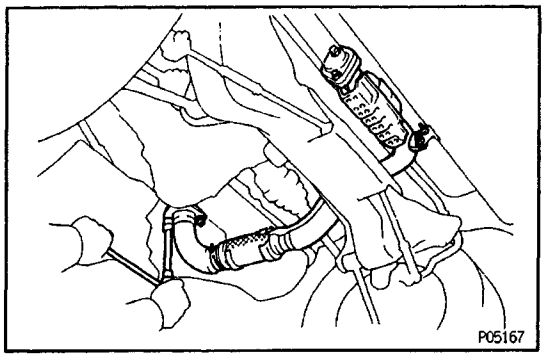

5. REMOVE EXHAUST MANIFOLD AND TWC ASSEMBLY

(a) Disconnect the following connectors:
Oxygen sensor (main) connector
(CALIF. only)
Sub–oxygen sensor connector
(b) Remove the six bolts and manifold upper heat insulator.

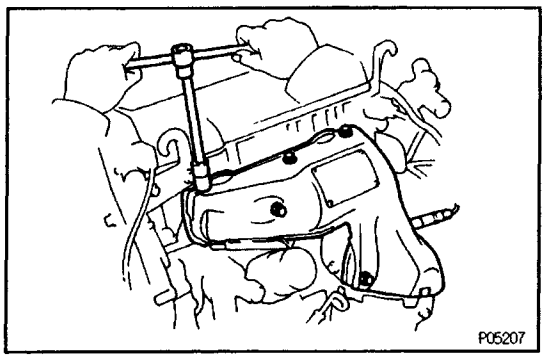

(c) Remove the two bolts, two nuts and TWC stay.

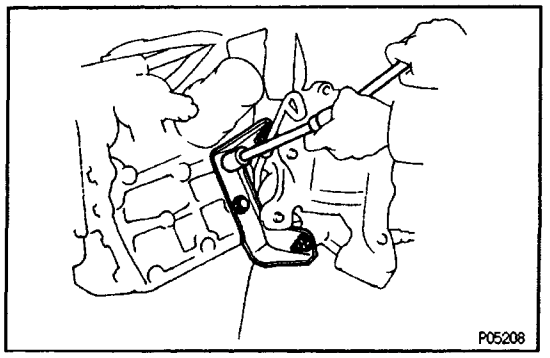

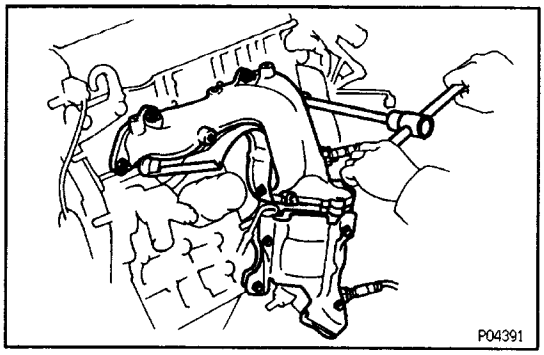

(d) Remove the six nuts, the exhaust manifold and TWC assembly.

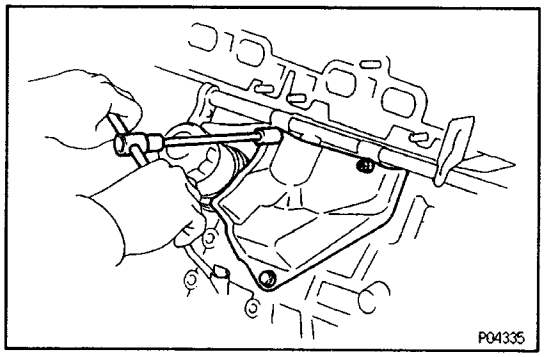

6. REMOVE WATER BY–PASS PIPE HEAT PROTECTOR

Remove the bolt, two nut and heat protector.

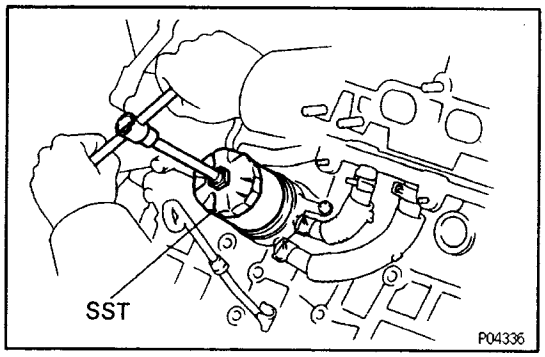

7. REMOVE OIL FILTER

Using SST, remove the oil filter.
SST 09228–06500

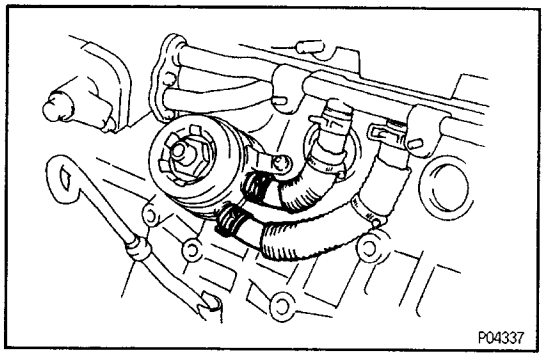

8. REMOVE OIL COOLER

(a) Disconnect the two water by–pass hoses from the oil cooler.

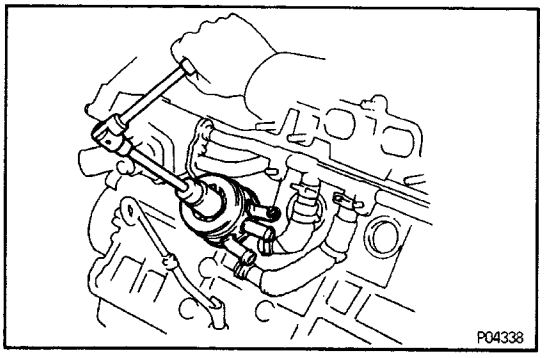

(b) Remove the relief valve and plate washer.
(c) Remove the nut and oil cooler.
(d) Remove the O–ring and gasket from the oil cooler.

EG086–03

OIL COOLER INSPECTION

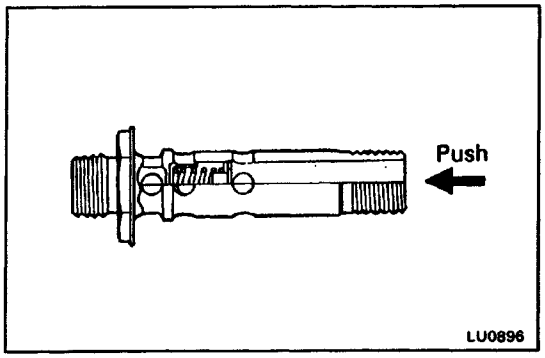

1. INSPECT RELIEF VALVE

Push the valve with a wooden stick to check if it is stuck.

If stuck, replace the relief valve.

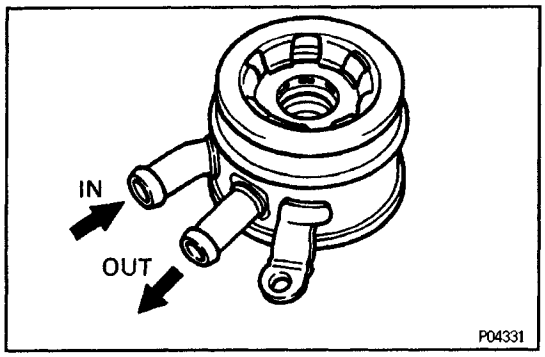

2. INSPECT OIL COOLER

Check the oil cooler for damage or clogging.

If necessary, replace the oil cooler.

EG15G–01

OIL COOLER INSTALLATION

(See Components for Removal and installation)

1. INSTALL OIL COOLER

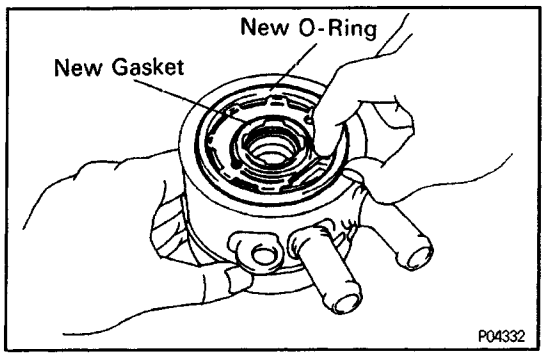

(a) Install new O–ring and gasket to the oil cooler.

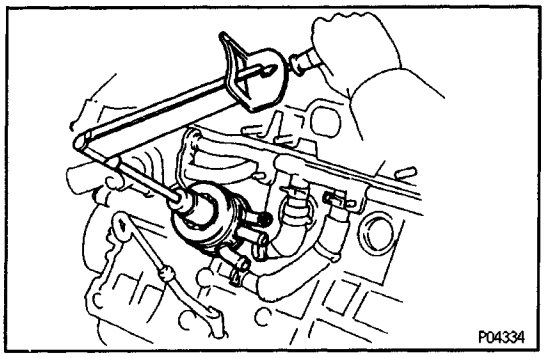

(b) Temporarily install the oil cooler with the nut.

(c) Apply a light coat of engine oil on the threads and under the head of the relief valve.

(d) Install the plate washer and relief valve.

Torque: 78 N–m (800 kgf–cm, 58 ft–lbf)

(e) Tighten the nut.

Torque: 7.8 N–m (80 kgf–cm, 69 in–lbf)

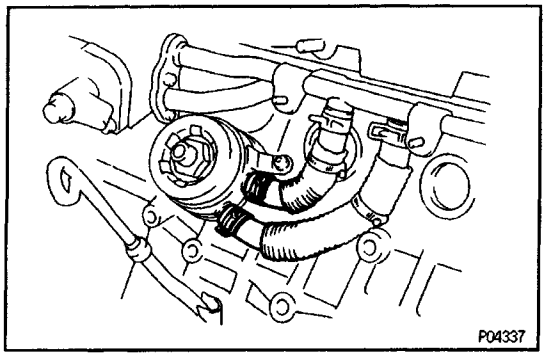

(f) Connect the two water by–pass hoses to the oil cooler.

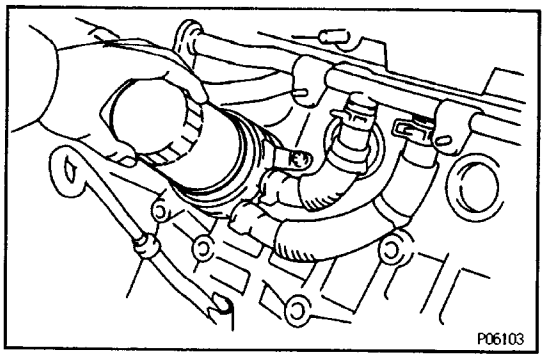

2. INSTALL OIL FILTER
(See Replacement of Oil and Oil Filter)

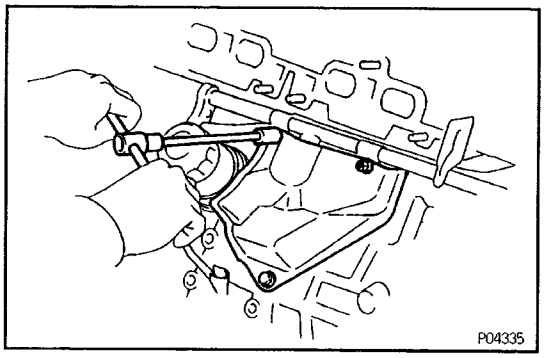

3. INSTALL WATER BY–PASS HOSE HEAT PROTECTOR

Install the heat protector with the bolt and two nuts.

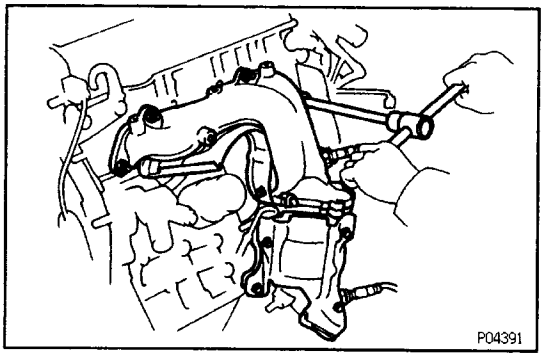

4. INSTALL EXHAUST MANIFOLD AND TWC ASSEMBLY

(a) Install a new gasket, the exhaust manifold and TWC assembly with the six nuts. Uniformly tighten the nuts in several passes.

Torque: 49 N–m (500 kgf–cm, 36 ft–lbf)

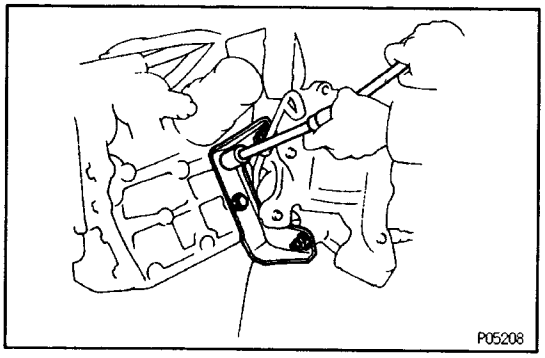

(b) Install the TWC stay with the two bolts and two nuts.

Torque: 42 N–m (425 kgf–cm, 31 ft–lbf)

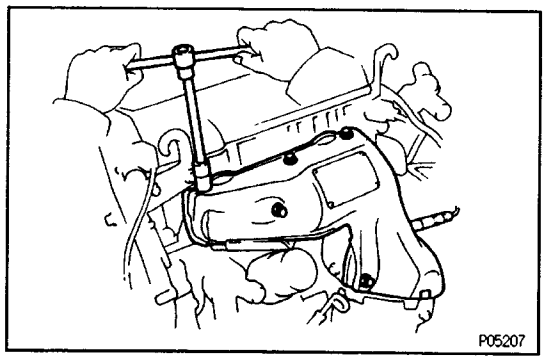

(c) Install the upper manifold heat insulator with–the six bolts.

(d) Connect the following connectors:

- Oxygen sensor (main) connector
- (CALIF. only)
- Sub–oxygen sensor connector

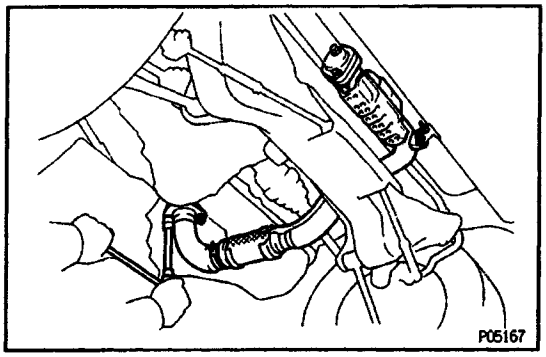

5. INSTALL FRONT EXHAUST PIPE

(a) Place two new gaskets to the front and rear of the front exhaust pipe.

(b) Using a 14 mm deep socket wrench, install the front exhaust pipe with three new nuts.

Torque: 62 N–m (630 kgf–cm, 46 ft–lbf)

(c) Install the two bolts holding the front exhaust pipe to the tailpipe.

Torque: 43 N–m (440 kgf–cm, 32 ft–lbf)

(d) Install the two bolts holding the front exhaust pipe bracket to the tailpipe bracket.

Torque: 19 N–m (190 kgf–cm, 14 ft–lbf)

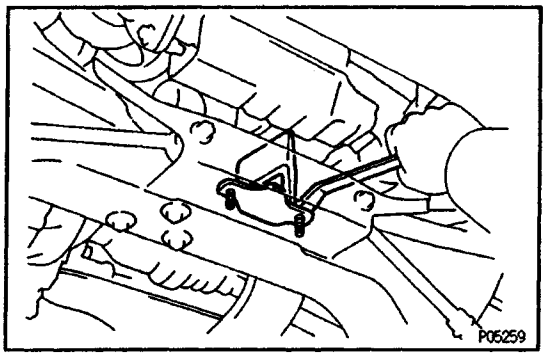

(e) Install the damper with the two bolts.

Torque: 21 N–m (210 kgf–cm, 15 ft–lbf)

6. CONNECT CABLE TO NEGATIVE TERMINAL OF BATTERY

7. FILL WITH ENGINE COOLANT

8. START ENGINE AND CHECK FOR LEAKS

9. CHECK ENGINE OIL LEVEL

10. INSTALL ENGINE UNDER COVERS

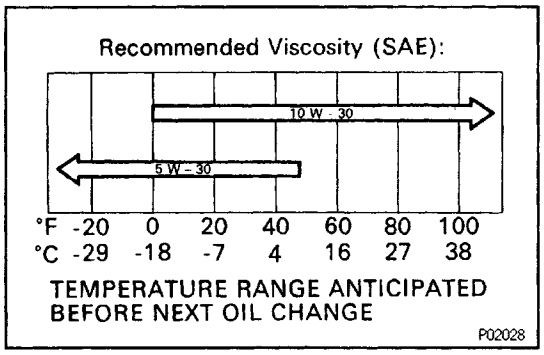

OIL PRESSURE CHECK

1. CHECK ENGINE OIL QUALITY EG14Z–01

Check the oil for deterioration, entry of water, discoloring or thinning.

If the quality is poor, replace the oil.

Oil grade:

API grade SG Energy–Conserving II multigrade engine oil. Recommended viscosity is as shown.

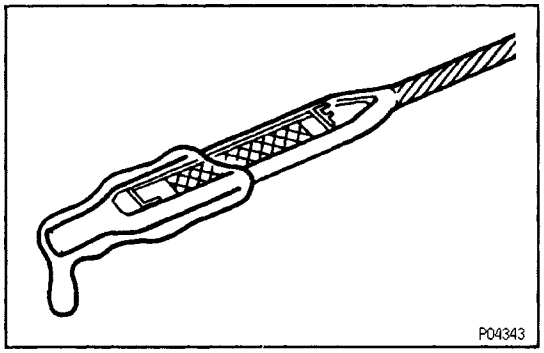

2. CHECK ENGINE OIL LEVEL

The oil level should be between the ”L” and ”F” marks on the dipstick.

If low, check for leakage and add oil up to ”F” mark.

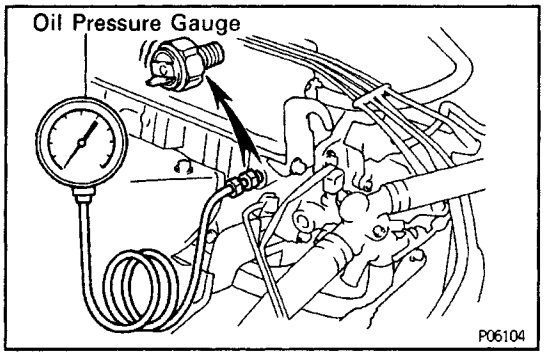

3. REMOVE OIL PRESSURE SWITCH, AND INSTALL OIL PRESSURE GAUGE

4. WARM UP ENGINE

Allow the engine to warm up to normal operating temperature.

5. CHECK OIL PRESSURE

Oil pressure:

At idle

29 kPa (0.3 kgf/cm^2, 4.3 psi) or more

At 3,000 rpm

245 – 490 kPa (2.5 – 5.0 kgf/cm^2, 36 – 71 psi)

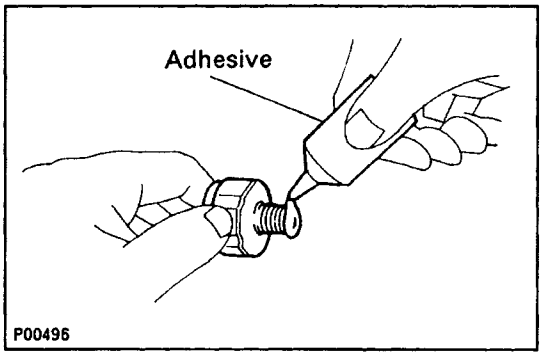

6. REMOVE OIL PRESSURE GAUGE, AND REINSTALL OIL PRESSURE SWITCH

(a) Remove the oil pressure gauge.

(b) Apply adhesive to two or three threads of the oil pressure switch.

Adhesive:

Part No. 08833–00080, THREE BOND 1344, LOCTITE 242 or equivalent

(c) Reinstall the oil pressure switch.

7. START ENGINE, AND CHECK FOR OIL LEAKS

OIL PUMP

EG1S2–01

COMPONENTS FOR REMOVAL AND INSTALLATION

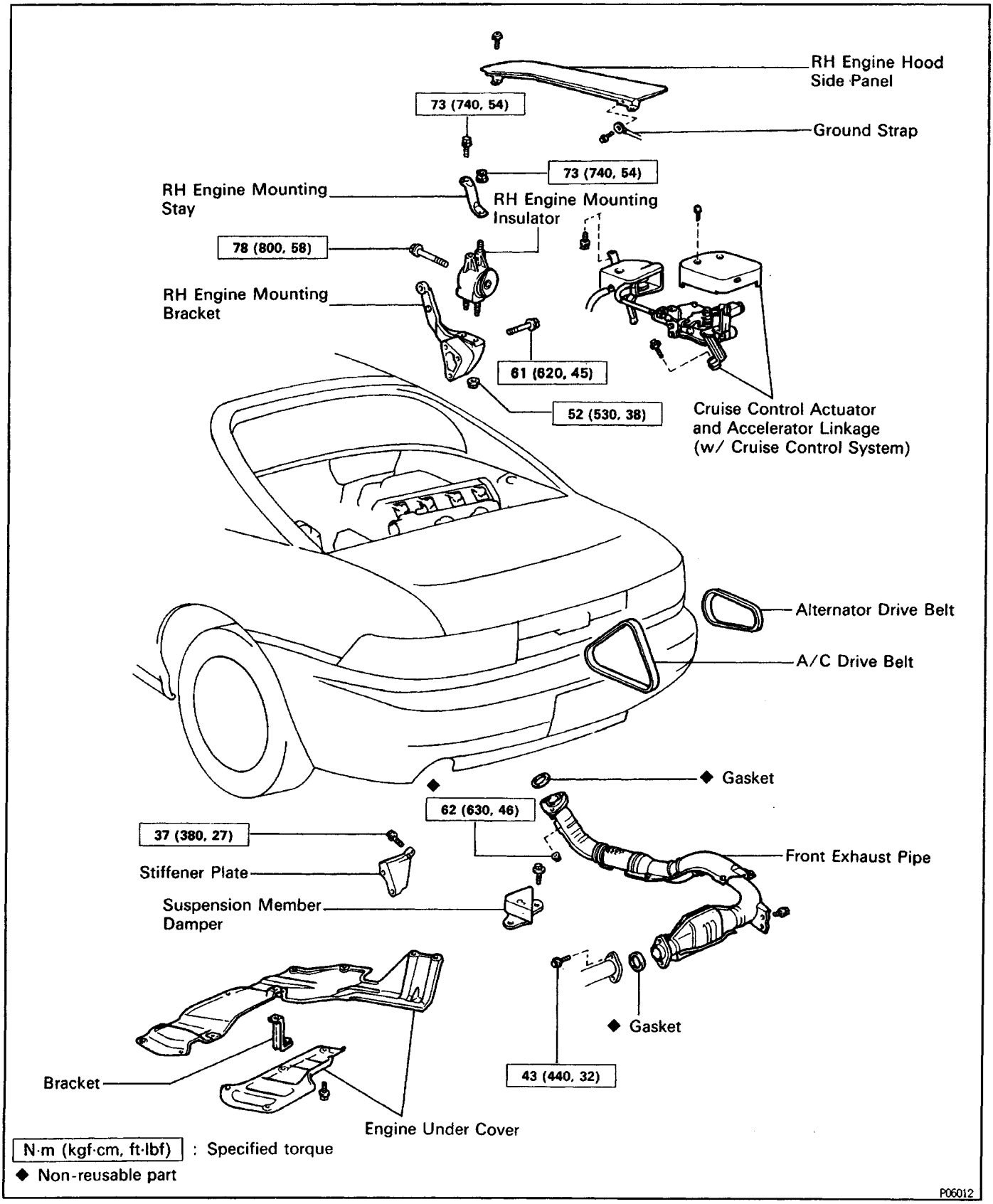

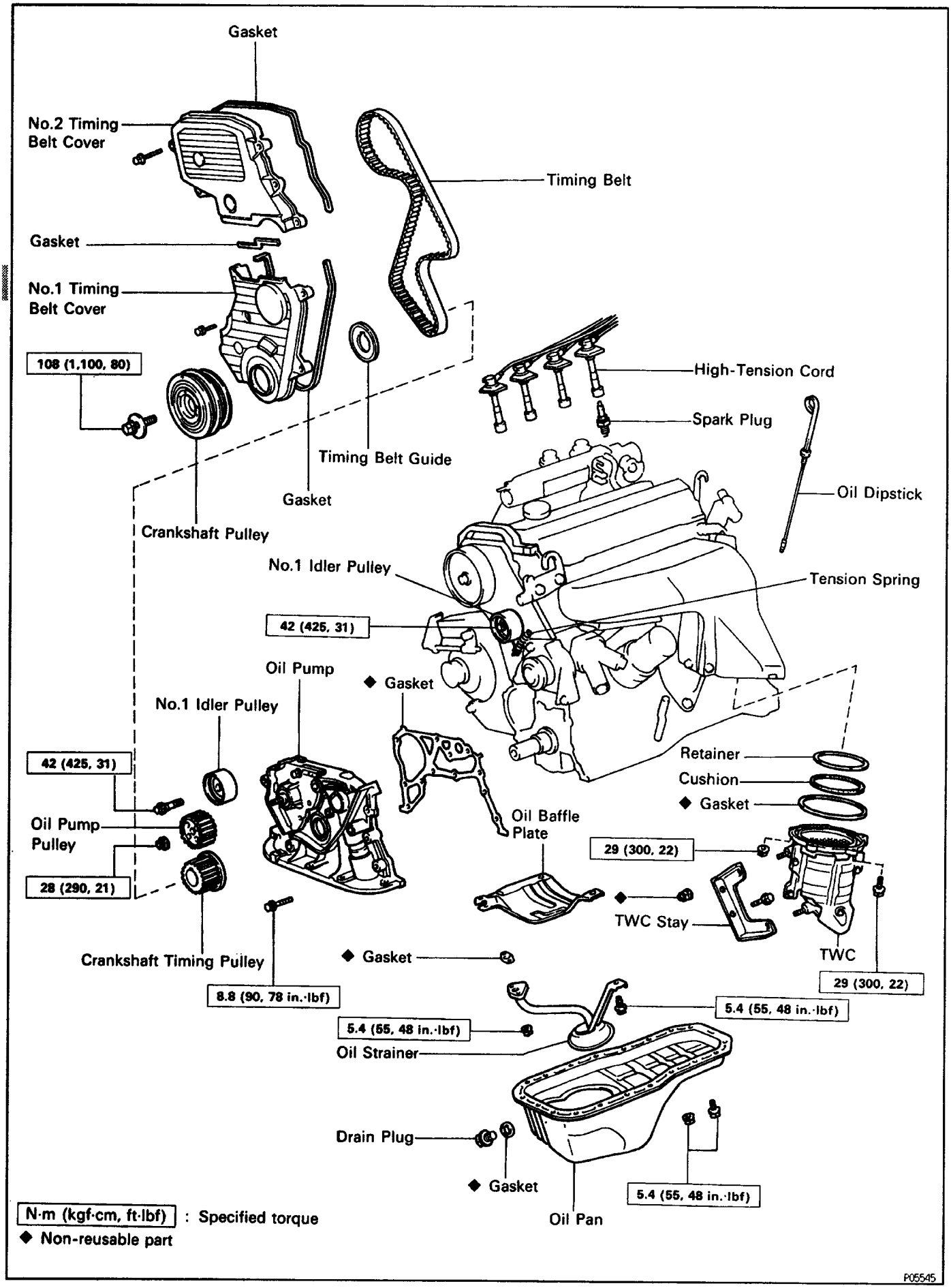
Gasket
No.2 Timing Belt Cover
Timing Belt
Gasket
No.1 Timing Belt Cover
108 (1,100, 80)
High-Tension Cord
Spark Plug
Timing Belt Guide
Gasket
Crankshaft Pulley
Oil Dipstick
No.1 Idler Pulley
Tension Spring
42 (425, 31)
Oil Pump
◆ Gasket
No.1 Idler Pulley
Retainer
Cushion
◆ Gasket
42 (425, 31)
Oil Baffle Plate
29 (300, 22)
Oil Pump Pulley
28 (290, 21)
◆ Gasket
TWC Stay
TWC
Crankshaft Timing Pulley
◆ Gasket
29 (300, 22)
8.8 (90, 78 in.·lbf)
5.4 (55, 48 in.·lbf)
5.4 (55, 48 in.·lbf)
Oil Strainer
Drain Plug
◆ Gasket
5.4 (55, 48 in.·lbf)
Oil Pan
N·m (kgf·cm, ft·lbf) : Specified torque
◆ Non-reusable part
P05545

EG154–01

OIL PUMP REMOVAL

(See Components for Removal and Installation)
HINT: When repairing the oil pump, the oil pan and strainer should be removed and cleaned:

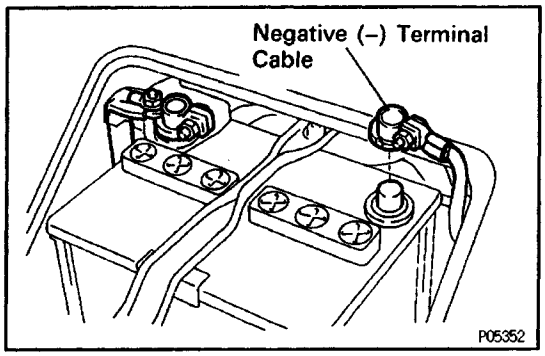

1. DISCONNECT CABLE FROM NEGATIVE TERMINAL OF BATTERY

CAUTION: Turn the ignition switch to "LOCK". Disconnect the negative terminal from the battery. Wait at least 20 seconds before proceeding with work.

2. DRAIN ENGINE OIL

3. REMOVE ENGINE UNDER COVERS

4. REMOVE RH ENGINE HOOD SIDE PANEL

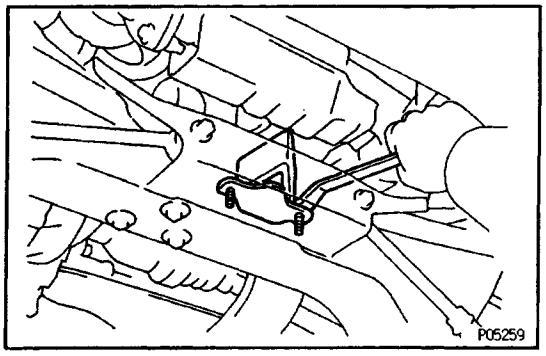

5. REMOVE EXHAUST PIPE

(a) (CALIF. only)
Remove the two bolts and damper.

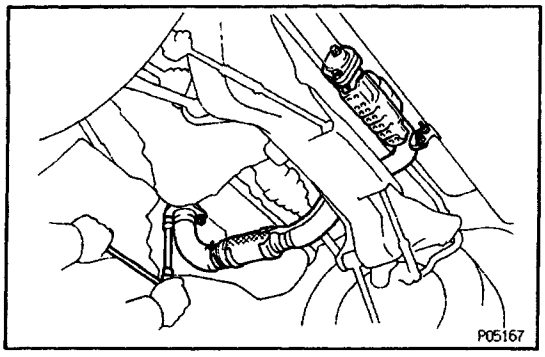

(b) Remove the two bolts holding the front exhaust pipe bracket to the tailpipe bracket.
(c) Remove the two bolts holding the front exhaust pipe to the tailpipe.
(d) Using a 14 mm deep socket wrench, remove the three nuts holding the front exhaust pipe to the TWC.
(e) Remove the front exhaust pipe.
(f) Remove the two gaskets.

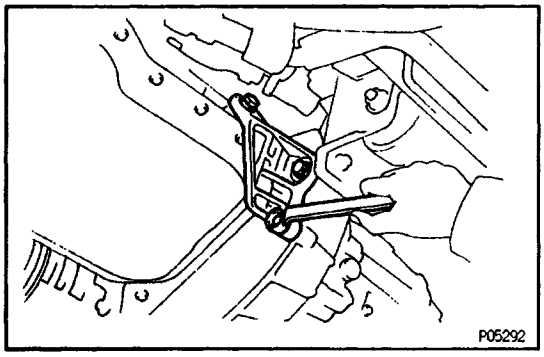

6. REMOVE STIFFENER PLATE

Remove the three bolts and stiffener plate.

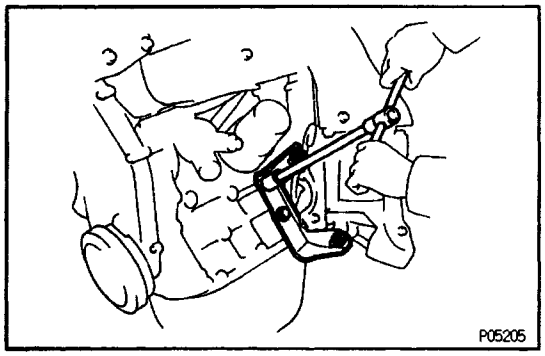

7. REMOVE TWC

(a) (CALIF. only)
Disconnect the sub–oxygen sensor connector.

(b) Remove the two bolts and TWC stay.

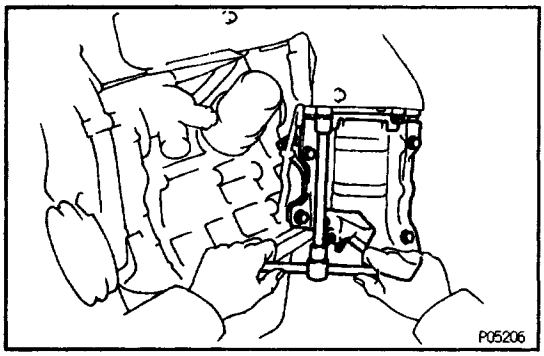

(c) Remove the three bolts, two nuts, TWC, gasket, retainer and cushion.

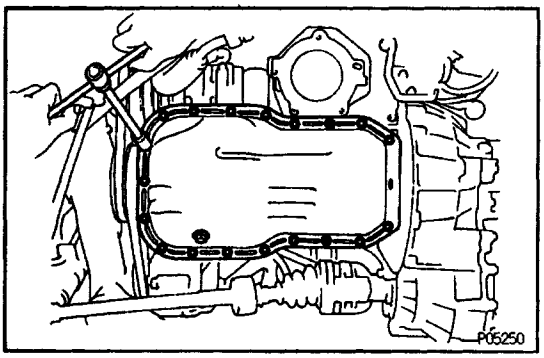

8. REMOVE OIL PAN

(a) Remove the oil dipstick.

(b) Remove the seventeen bolts and two nuts.

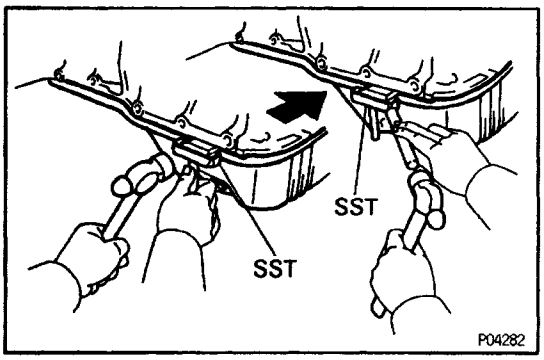

(c) Insert the blade of SST between the cylinder block and oil pan, and cut off applied sealer and remove the oil pan.
SST 09032–00100

NOTICE:

- **Do not use SST for the oil pump body side and rear oil seal retainer.**
- **Be careful not to damage the 'oil pan flange.**

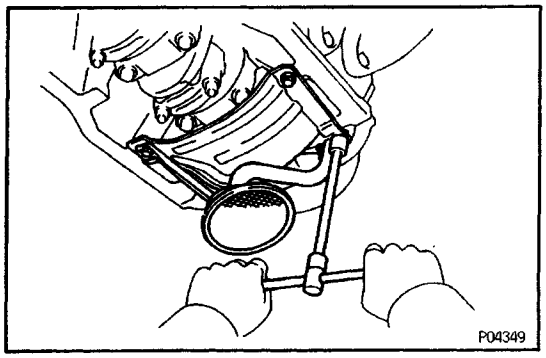

9. REMOVE OIL STRAINER
Remove the two bolts, nuts, oil strainer and gasket.

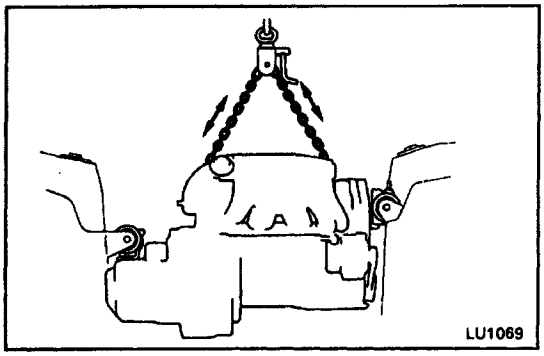

10. SUSPEND ENGINE WITH ENGINE SLING DEVICE

11. REMOVE TIMING BELT
(See steps 4 to 6 and 8 to 22 in Timing belt Removal under Engine Mechanical)

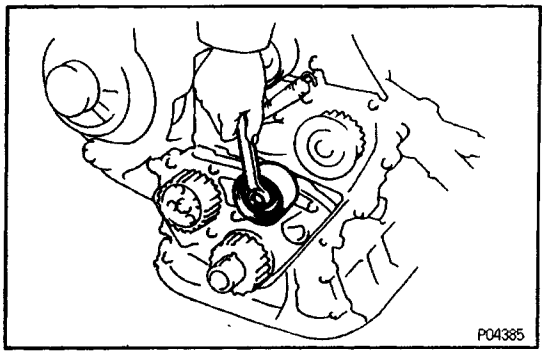

12. REMOVE N0.2 IDLER PULLEY
Remove the bolt and pulley.

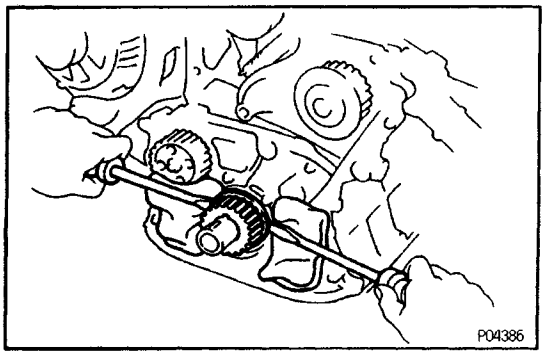

13. REMOVE CRANKSHAFT TIMING PULLEY
If the pulley cannot be removed by hand, use two screwdrivers.
HINT: Position shop rags as shown to prevent damage.

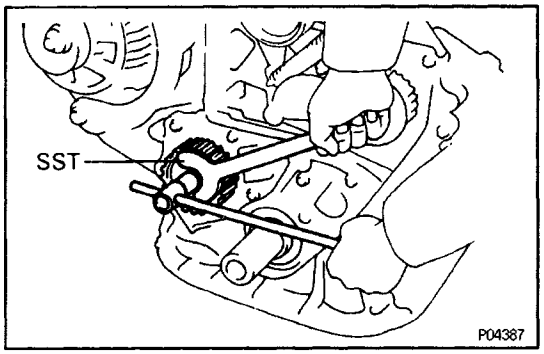

14. REMOVE OIL PUMP PULLEY

Using SST, remove the nut and pulley.
SST 09616–30011

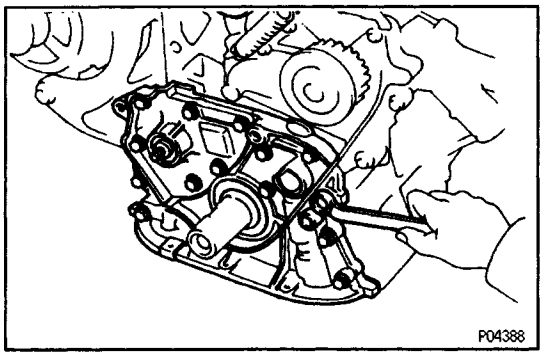

15. REMOVE OIL PUMP

(a) Remove the twelve bolts.

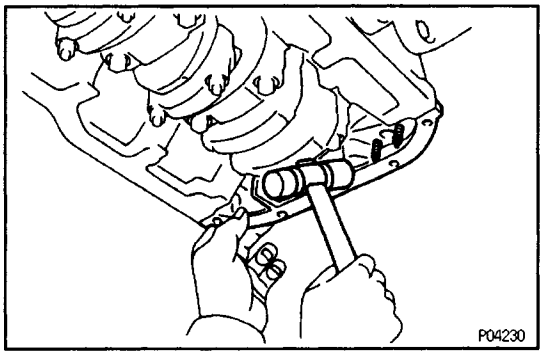

(b) Using a plastic–faced hammer, remove the oil pump by carefully tapping the oil pump body.
(c) Remove the gasket.

COMPONENTS FOR DISASSEMBLY AND ASSEMBLY

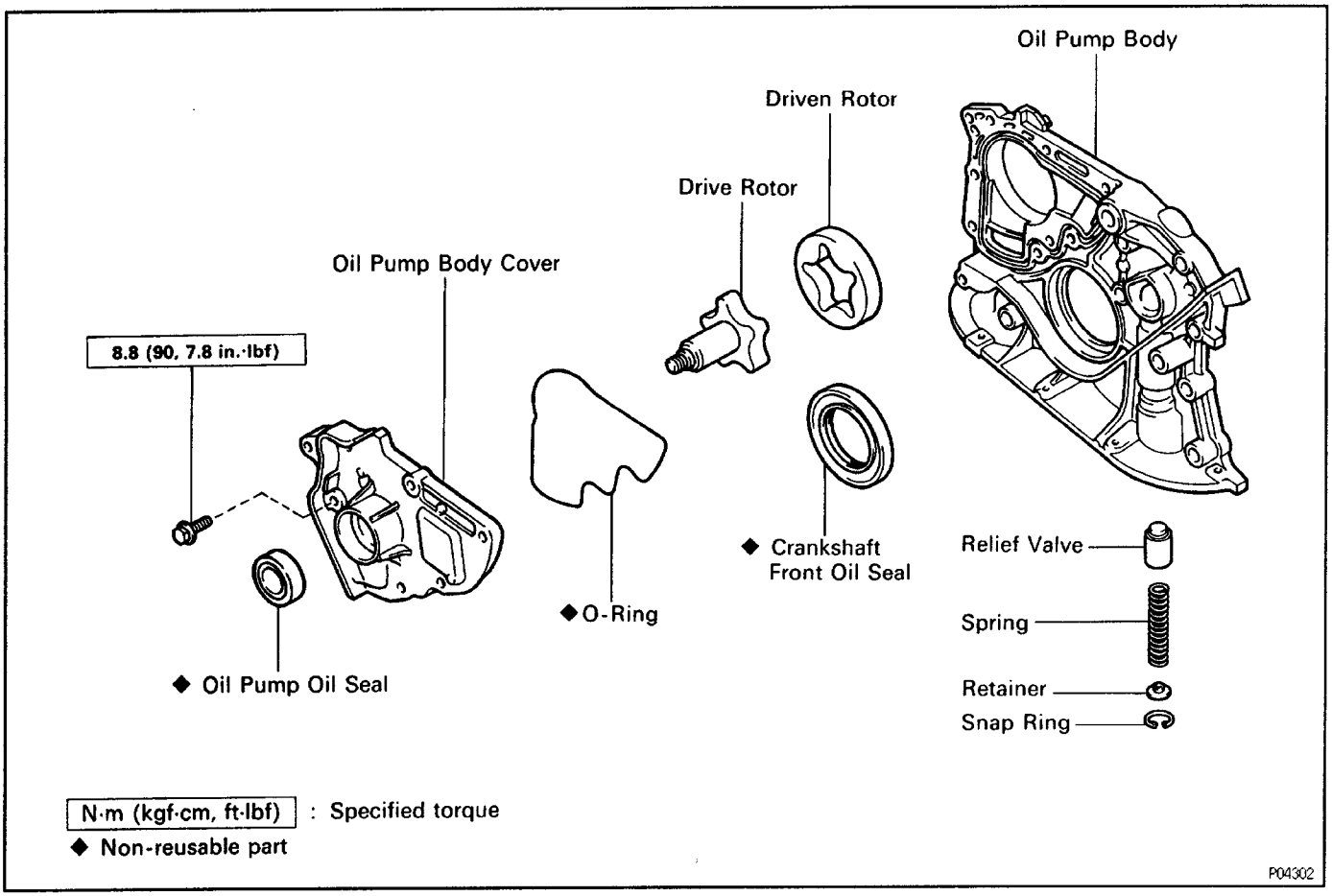

EG156–01

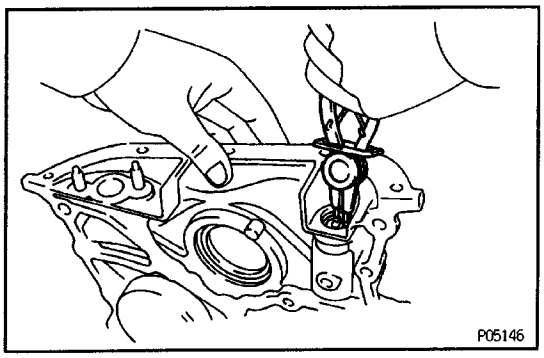

OIL PUMP DISASSEMBLY

(See Components for Disassembly and Assembly)

1. REMOVE RELIEF VALVE

(a) Using snap ring pliers, remove the snap ring.

(b) Remove the retainer, spring and relief valve.

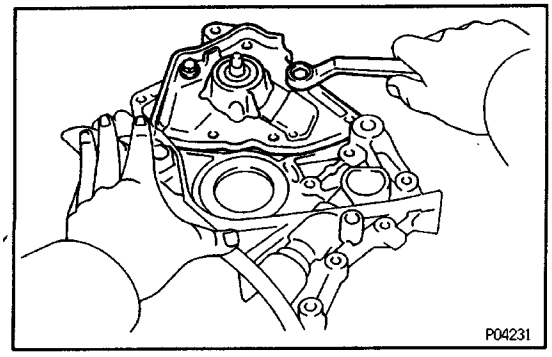

2. REMOVE DRIVE AND DRIVEN ROTORS

Remove the two bolts, pump body cover, O–ring, the drive and driven rotors.

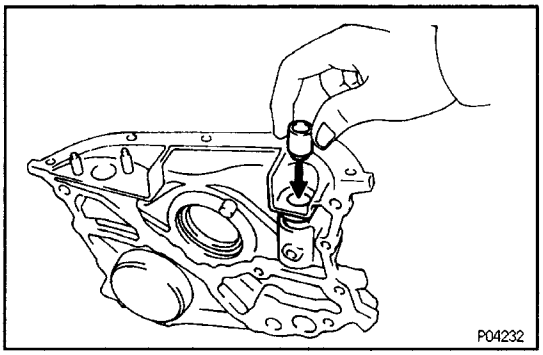

EG157–01

OIL PUMP INSPECTION

1. INSPECT RELIEF VALVE

Coat the valve with engine oil and check that it falls smoothly into the valve hole by its own weight.
If it doesn't, replace the relief valve. If necessary, replace the oil pump assembly.

2. INSPECT DRIVE AND DRIVEN ROTORS

A. Inspect rotor body clearance

Using a feeler gauge, measure the clearance between the driven rotor and body.

Standard body clearance:

0.10 – 0.16 mm (0.0039 – 0.0063 in.)

Maximum body clearance:

0.20 mm (0.0079 in.)

If the body clearance is greater than maximum, replace the rotors as a set. If necessary, replace the oil pump assembly.

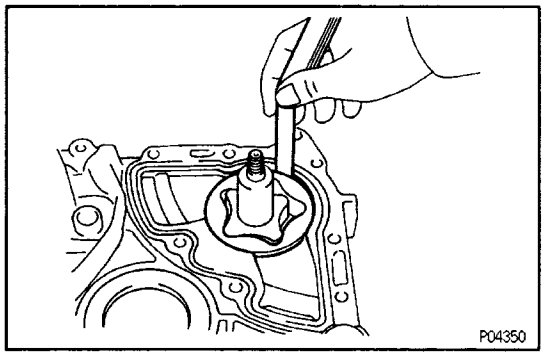

B. Inspect rotor tip clearance

Using a feeler gauge, measure the clearance between the drive and driven rotor tips.

Standard tip clearance:

0.04 – 0.16 mm (0.0016 – 0.0063 in.)

Maximum tip clearance:

0.20 mm (0.0079 in.)

If the tip clearance is greater than maximum, replace the rotors as a set.

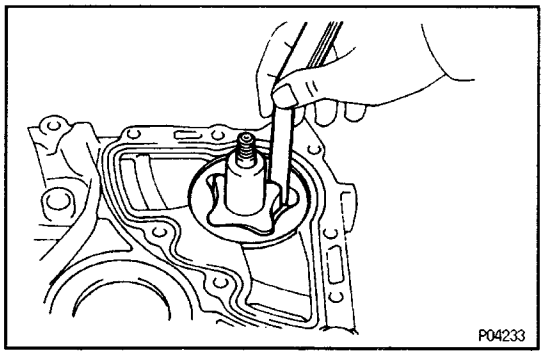

EG158–01

OIL PUMP OIL SEAL REPLACEMENT

1. REMOVE OIL SEAL

Using a screwdriver, pry out the oil seal.

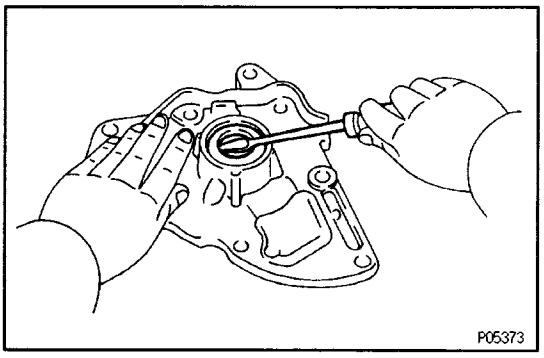

2. INSTALL OIL SEAL

(a) Using SST and a hammer, tap in a new oil seal until its surface is flush with the oil pump cover edge.
SST 09620–30010 (09627–30010, 09631–00020)

(b) Apply MP grease to the oil seal lip.

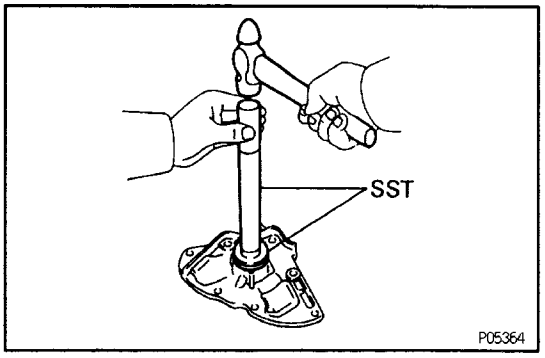

EG1B0–01

CRANKSHAFT FRONT OIL SEAL REPLACEMENT

HINT: There are two methods (A and B) to replace the oil seal which are as follows:

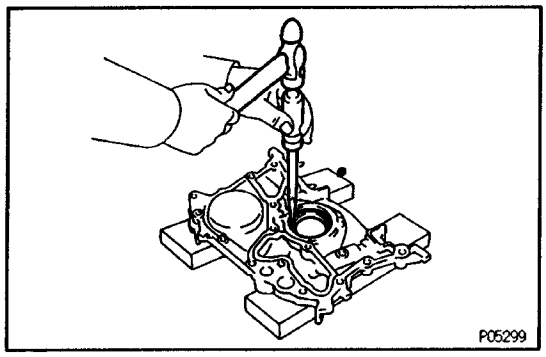

REPLACE CRANKSHAFT FRONT OIL SEAL

A. If oil pump is removed from cylinder block:

(a) Using a screwdriver and hammer, tap out the oil seal.

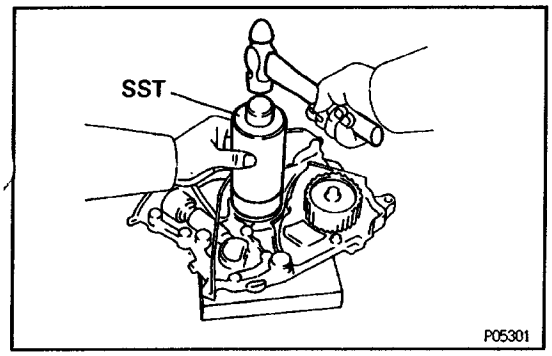

(b) Using SST and a hammer, tap in a new oil seal until its surface is flush with the oil pump body edge.
SST 09226–10010

(c) Apply MP grease to the oil seal lip.

B. If oil pump is installed to the cylinder block:

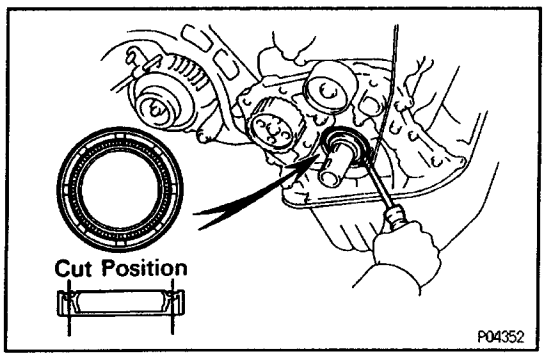

(a) Using a knife, cut off the oil seal lip.

(b) Using a screwdriver, pry out the oil seal.

NOTICE: Be careful not to damage the crankshaft. Tape the screwdriver tip.

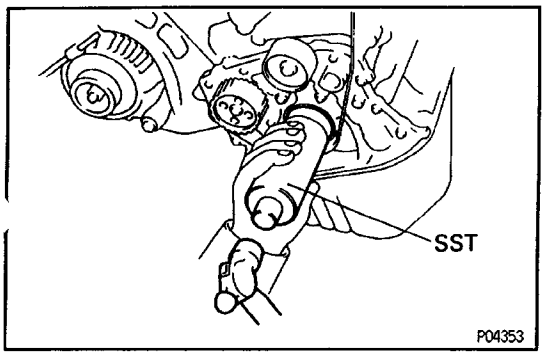

(c) Apply MP grease to a new oil seal lip.

(d) Using SST and a hammer, tap in the oil seal until its surface is flush with the oil pump body edge.
SST 09226–10010

EG15D–01

OIL PUMP ASSEMBLY

(See Components for Disassembly and Assembly)

1. INSTALL DRIVE AND DRIVEN ROTORS

(a) Place the drive and driven rotors into pump body with the marks facing the pump body cover side.

(b) Install a new O–ring to the oil pump body.

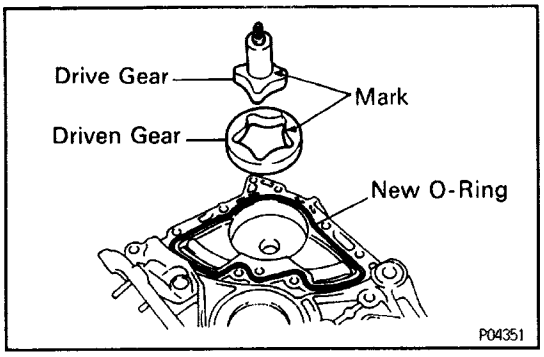

(c) Install the oil pump body cover with the two bolts.
Torque: 8.8 N–m (90 kgf–cm, 78 in–lbf)

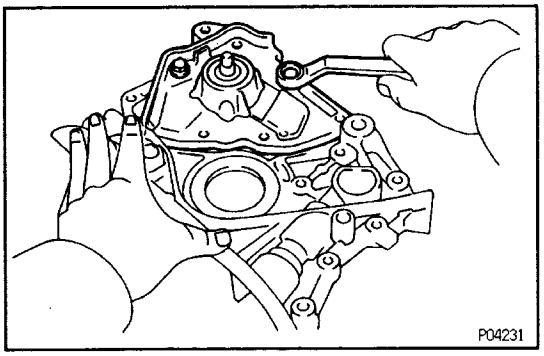

2. INSTALL RELIEF VALVE

(a) Insert the relief valve, spring and retainer into the oil pump body hole.

(b) Using snap ring pliers, install the snap ring.

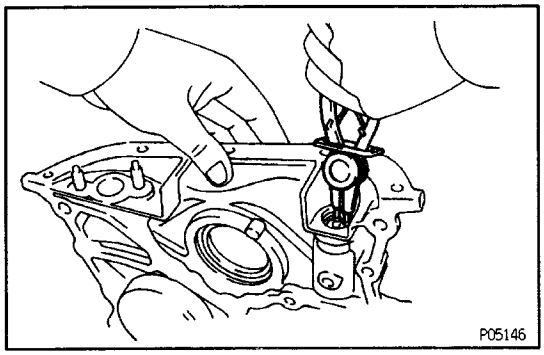

EG15D–01

OIL PUMP INSTALLATION

(See Components for Removal and Installation)

1. INSTALL OIL PUMP

Install a new gasket and the oil pump with the twelve bolts.

Torque: 8.8 N–m (90 kgf–cm, 78 in.–lbf)

HINT: Long bolt are indicated in the illustration.

Bolt length:

35 mm (1.38 in.) for long bolt

25 mm (0.98 in.) for other bolts

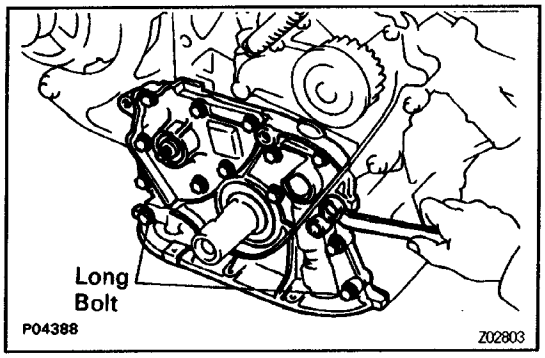

2. INSTALL OIL PUMP PULLEY

(a) Align the cutouts of the pulley and shaft, and slide on the pulley.

(b) Using SST, install the pulley nut.

SST 09616–30011

Torque: 28 N–m (290 kgf–cm, 21 ft–lbf)

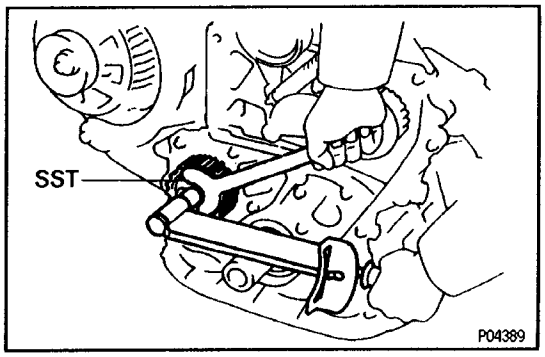

3. INSTALL CRANKSHAFT TIMING PULLEY

(a) Align the timing pulley set key with the key groove of the pulley.

(b) Slide on the timing pulley, facing the flange side inward.

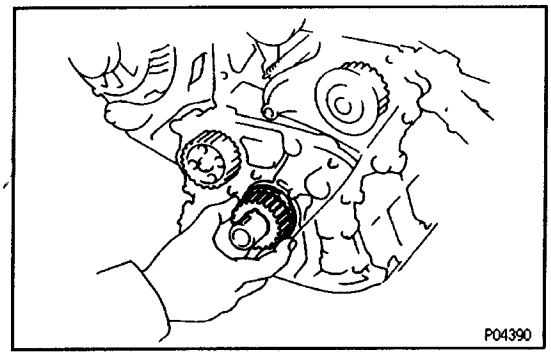

4. INSTALL NO.2 IDLER PULLEY

(a) Install the pulley with the bolt.

Torque: 42 N–m (425 kgf–cm. 31 ft–lbf)

(b) Check that the idler pulley moves smoothly.

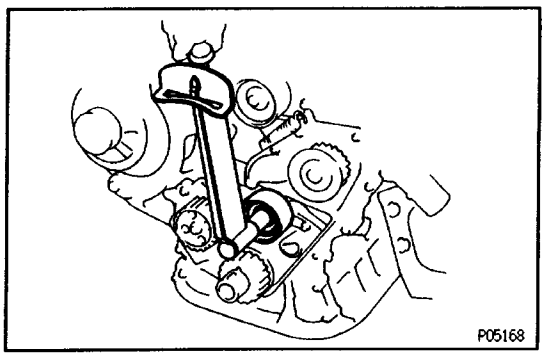

5. INSTALL TIMING BELT

(See steps 5 to 19 and 21 to 23 in Timing Belt Installation under Engine Mechanical)

6. REMOVE ENGINE SLING DEVICE

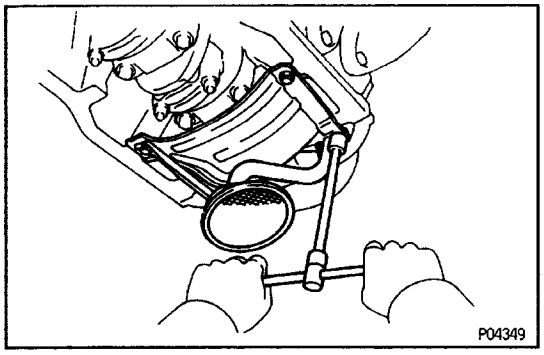

7. INSTALL OIL STRAINER

Install a new gasket and the oil strainer with the two bolts and nuts.

Torque: 5.4 N–m (55 kgf–cm, 48 in.–lbf)

8. INSTALL OIL PAN

(a) Remove any old packing (FIPG) material and be careful not to drop any oil on the contact surfaces of the oil pan and cylinder block.

- Using a razor blade and gasket scraper, remove all the old packing (FIPG) material from the gasket surfaces and sealing groove.
- Thoroughly clean all components to remove all the loose material.
- Using a non–residue solvent, clean both sealing surfaces.

NOTICE: Do not use a solvent which will affect the painted surfaces.

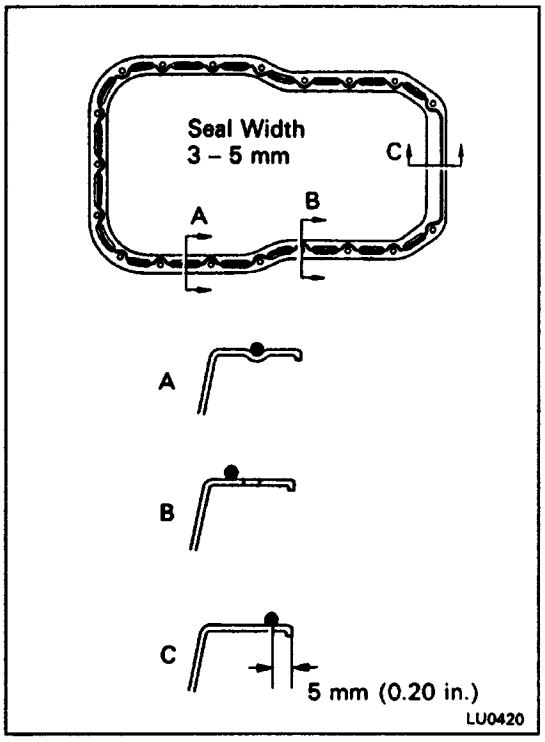

(b) Apply seal packing to the oil pan as shown in the illustration.

Seal packing:

Part No. 08826–00080 or equivalent

- Install a nozzle that has been cut to a 3 – 5 mm (0.12 – 0.20 in.) opening.
- Parts must be assembled within 5 minutes of application. Otherwise the material must be removed and reapplied.
- Immediately remove nozzle from the tube and reinstall cap.

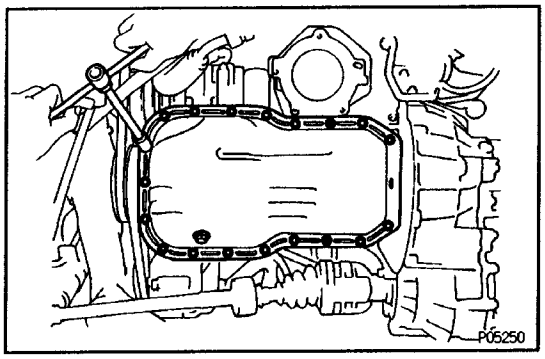

(c) Install the oil pan with the seventeen bolts and two nuts.
Torque: 5.4 N–m (55 kgf–cm, 48in–lbf)
(d) Install the dipstick.

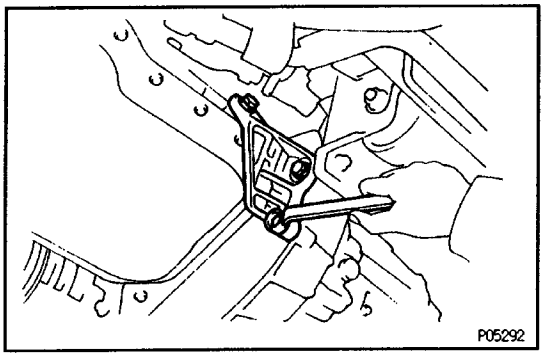

9. INSTALL STIFFENER PLATE
Install the stiffener plate with the three bolts.
Torque: 37 N–m (380 kgf–cm, 27 ft–lbf)

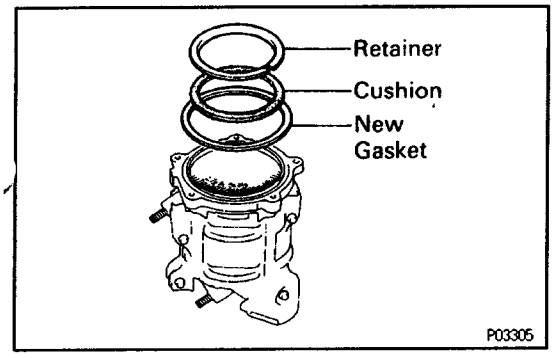

10. INSTALL TWC
(a) Place the cushion, retainer and a new gasket on the TWC.

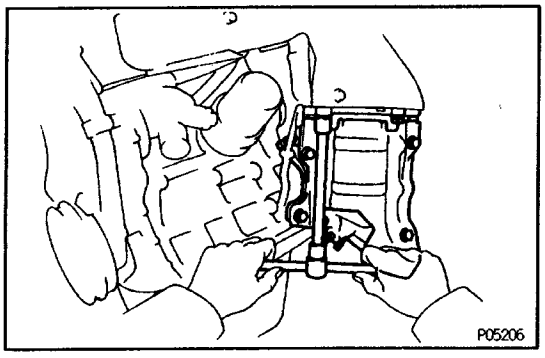

(b) Install the TWC with the three bolts and two nuts.
Torque: 29 N–m (300 kgf–cm, 21 ft–lbf)

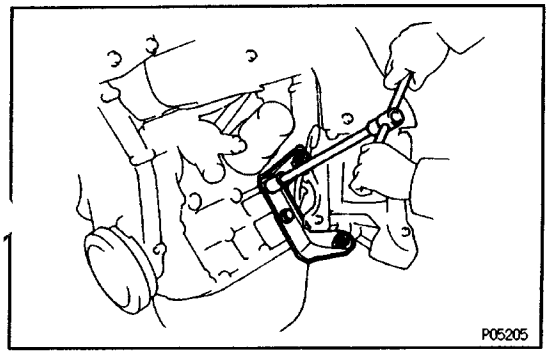

(c) Install the TWC stay with the two bolts.
Torque: 42 N–m (425 kgf–cm, 31 ft–lbf)
(d) (CALIF.only)
Connect the sub–oxygen sensor.

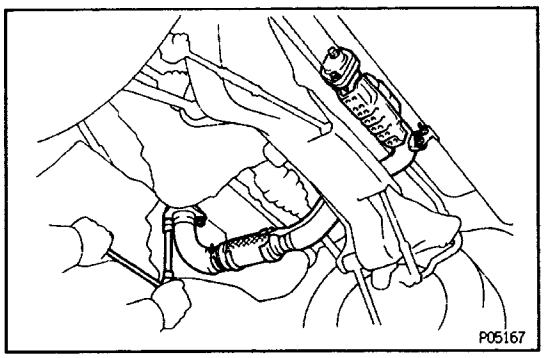

11. INSTALL FRONT EXHAUST PIPE

(a) Place two new gaskets to the front and rear of the front exhaust pipe.

(b) Using a 14 mm deep socket wrench, install the front exhaust pipe with three new nuts.

Torque: 62 N–m (630 kgf–cm, 46 ft–lbf)

(c) Install the two bolts holding the front exhaust pipe to the tailpipe.

Torque: 43 N–m (440 kgf–cm, 32 ft–lbf)

(d) Install the two bolts holding the front exhaust pipe bracket to the tailpipe bracket.

Torque: 19 N–m (190 kgf–cm, 14 ft–lbf)

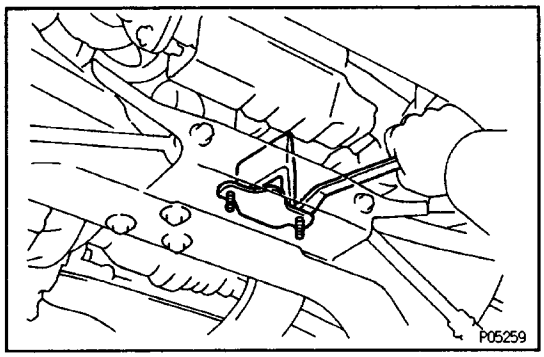

(e) Install the damper with the two bolts.

Torque: 21 N–m (210 kgf–cm, 15 ft–lbf)

12 INSTALL RH ENGINE HOOD SIDE PANEL

13. CONNECT CABLE TO NEGATIVE TERMINAL OF BATTERY

14. FILL WITH ENGINE OIL

15. START ENGINE AND CHECK FOR OIL LEAKS

16. RECHECK ENGINE OIL LEVEL

17. INSTALL ENGINE UNDER COVERS

LUBRICATION SYSTEM

DESCRIPTION

EG14Q–01

A fully pressurized, fully filtered lubrication system has been adopted for this engine.

OPERATION

EG14R–01

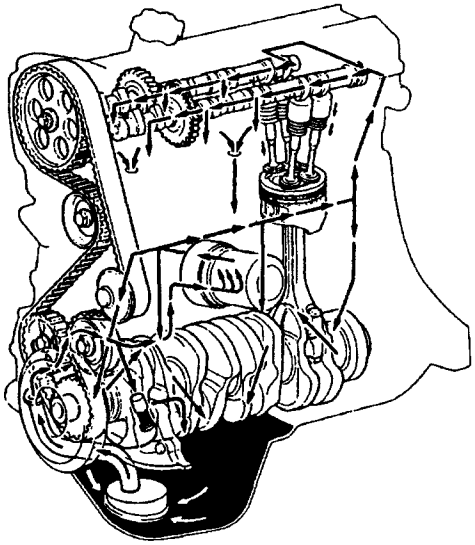

LU0910

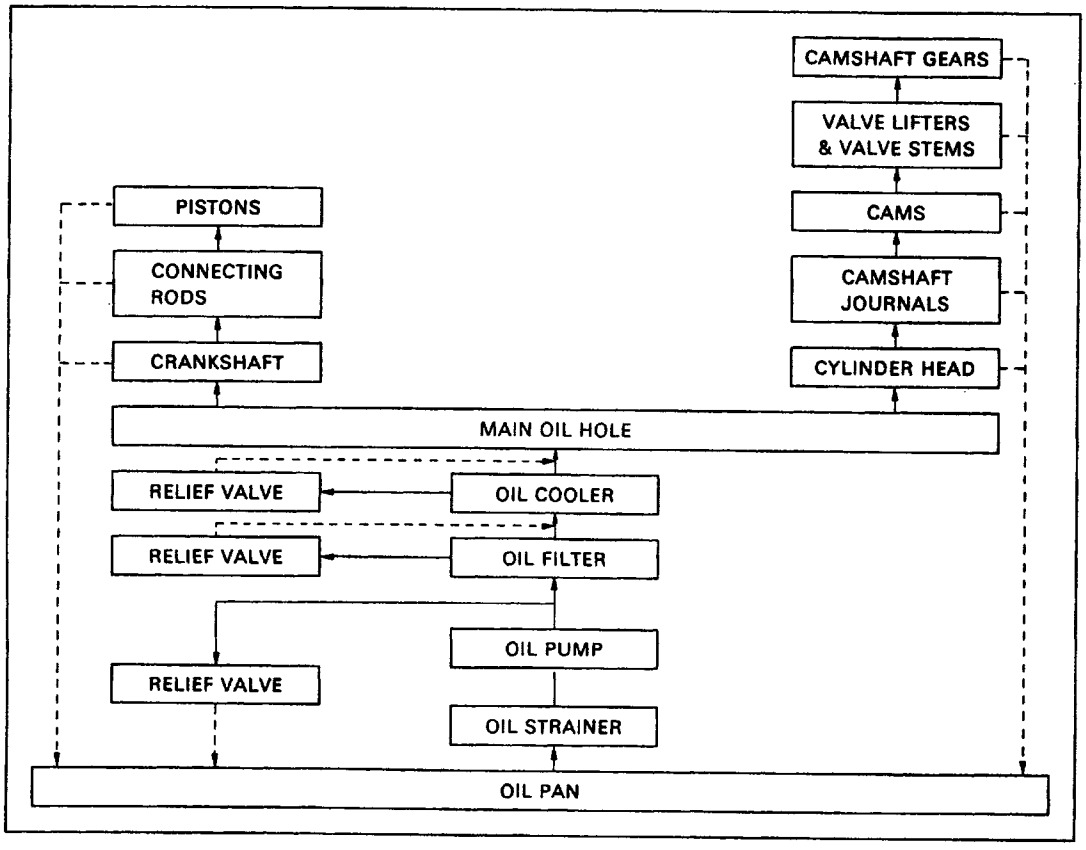

Z02934

A pressure feeding lubrication system has been adopted to supply oil to the moving parts of this engine. The lubrication system consists of an oil pan, oil pump, oil filter and other external parts which supply oil to the moving parts in the engine block. The oil circuit is shown in the illustration at the top of the previous page. Oil from the oil pan is pumped up by the oil pump. After it passes through the oil filter, it is through the various oil holes in the crankshaft and cylinder block. After passing through the cylinder block and performing its lubricating function, the oil is returned by gravity to the oil pan. A dipstick on the center left side of the cylinder block is provided to check the oil level.

OIL PUMP

The oil pump pumps up oil from the oil pan and feeds it under pressure to the various parts of the engine. An oil strainer is mounted in front of the inlet to the oil pump to remove impurities. The oil pump itself is a trochoid type pump, inside of which is a drive rotor and a driven rotor. When the drive rotor rotates, the driven rotor rotates in the same direction, and since the axis of the drive rotor shaft is different from the center of the driven rotor, the space between the two rotors is changed as they rotate. Oil is drawn in when the space widens and is discharged when the space becomes narrow.

OIL PRESSURE REGULATOR (RELIEF VALVE)

At high engine speeds, the engine oil supplied by the oil pump exceeds the capacity of the engine to utilize it. For that reason, the oil pressure regulator works to prevent an oversupply of oil. During normal oil supply, a coil spring and valve keep the by–pass closed, but when too much oil is being fed, the pressure becomes extremely high, overpowering the force of the spring and opening the valves. This allows the excess oil to flow through the valve and return to the oil pan.

OIL FILTER

The oil filter is a full flow type filter with a relief valve built into the paper filter element. Particles of metal from wear, airborne dirt, carbon and other impurities can get into the oil during use and could cause accelerated wear or seizing it allowed to circulate through the engine. The oil filter, integrated into the oil line, removes these impurities as the oil passes through it. The filter is mounted outside the engine to simplify replacement of the filter element. A relief valve is also included ahead of the filter element to relieve the high oil pressure in case the filter element becomes clogged with impurities. The relief valve opens when the oil pressure overpowers the force of the spring. Oil passing through the relief valve by–passes the oil filter and flows directly into the main oil hole in the engine.

PREPARATION

EG14U–01

SST (SPECIAL SERVICE TOOLS)

	09032–00100 Oil Pan Seal Cutter	
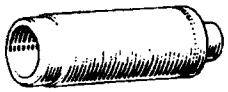	09226–10010 Crankshaft Front & Rear Bearing Replacer	Crankshaft front oil seal
	09228–06500 Oil Filter Wrench	
	09616–30011 Steering Worm Bearing Adjusting Screw Wrench	Oil pump pulley
	09620–30010 Steering Gear Box Replacer Set	
	(09627–30010) Steering Sector Shaft Bushing Replacer	Oil pump oil seal
	(09631 –00020) Handle	Oil pump oil seal

EG14V–01

RECOMMENDED TOOLS

	09090–04000 Engine Sling Device	For suspending engine
	09200–00010 Engine Adjust Kit	
	09905–00013 Snap Ring Pliers	

EG14W–01

EQUIPMENT

Oil pressure gauge	
Torque wrench	

EG14X–01

LUBRICANT

Item	Capacity	Classification
Engine oil Dry fill Drain and refill w/ Oil filter change w/o Oil filter change	 4.6 liters (4.9 US qts, 4.0 Imp. qts) 4.2 liters (4.4 US qts, 3.7 Imp. qts) 3.8 liters (4.0 US qts, 3.3 Imp. qts)	API grade SG, Energy–Conserving II muitigrade and recommended viscosity oil

EG14Y-01

SSM (SPECIAL SERVICE MATERIALS)

08826–00080 Seal packing or equivalent	Oil pan
08833–00080 Adhesive 1344, THREE BOND 1344, LOCTITE 242 or equivalent	Oil pressure switch

SERVICE SPECIFICATIONS

SERVICE DATA

EG15A–01

Oil pressure	At idle speed (normal operating temperature)	29 kPa (0.3 kgf/cm², 43 psi) or more
	At 3,000 rpm (normal operating temperature)	245 – 490 kPa (2.5 – 5.0 kgf/cm², 36 – 71 psi)
Oil pump	Body clearance (STD)	0.10 – 0.16 mm (0.0039 – 0.0063 in.)
	Body clearance (Maximum)	0.20 mm (0.0079 in.)
	Tip clearance (STD)	0.04 – 0.16 mm (0.0016 – 0.0063 in.)
	Tip clearance (Maximum)	0.20 mm (0.0079 in.)

TORQUE SPECIFICATIONS

EG15C–01

Part tightened	N·m	kgf·cm	ft·lbf
Oil pan x Drain plug	39	400	29
Oil pump body cover x Oil pump body	8.8	90	78 in.·lbf
Oil pump x Cylinder block	8.8	90	78 in.·lbf
Oil pump pulley x Oil pump drive rotor	28	290	21
No.2 idler pulley x Cylinder block	42	425	31
Oil strainer x Cylinder block	5.4	55	48 in.·lbf
Oil strainer x Oil pump	5.4	55	48 in.·lbf
Oil pan x Cylinder block	5.4	55	48 in.·lbf
Oil pan x Oil pump	5.4	55	48 in.·lbf
TWC (main) x Exhaust manifold	29	300	22
TWC stay x TWC (main)	42	425	31
TWC stay x Cylinder block	42	425	31
Stiffener plate x Cylinder block	37	380	27
Stiffener plate x Transaxle case	37	380	27
Front exhaust pipe x TWC (main)	62	630	46
Suspension member damper x Suspension crossmember	21	210	15
Tailpipe x Front exhaust pipe	43	440	32
Tailpipe bracket x Front exhaust pipe bracket	19	190	14
Oil cooler x Cylinder block (Relief valve)	78	800	58
Oil cooler x Cylinder block (Nut)	7.8	80	69 in.·lbf
Exhaust manifold x Cylinder head	49	500	36

AC IDLE–UP VALVE

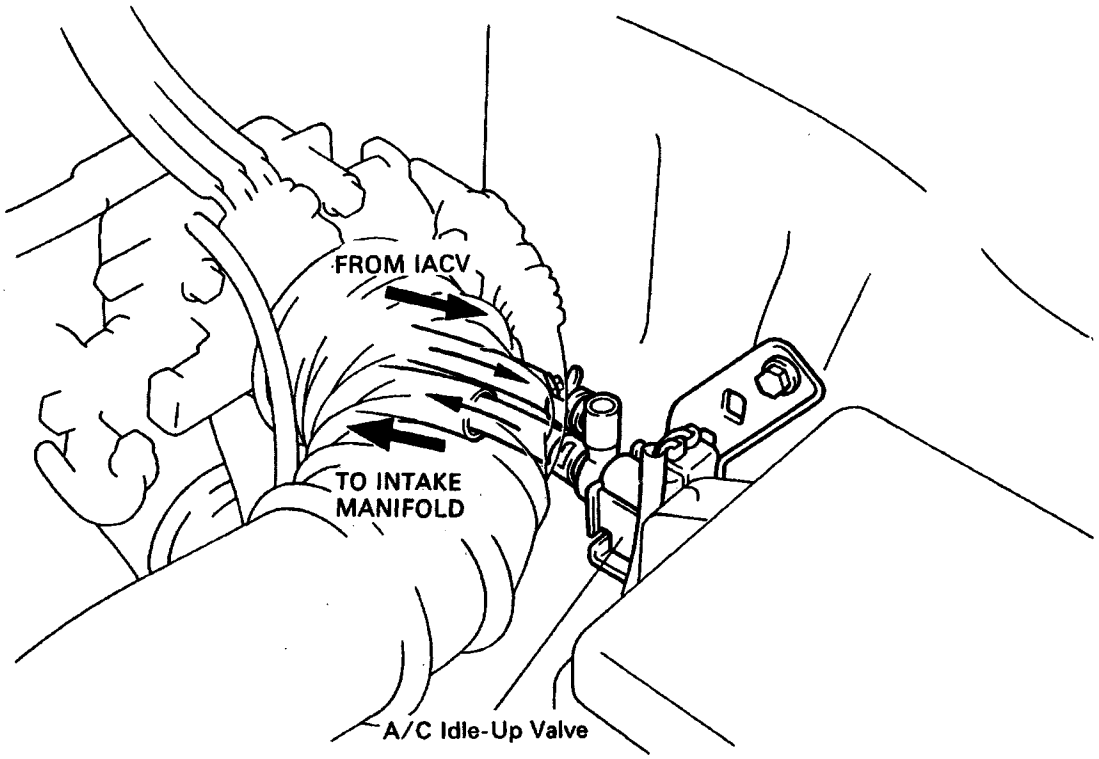

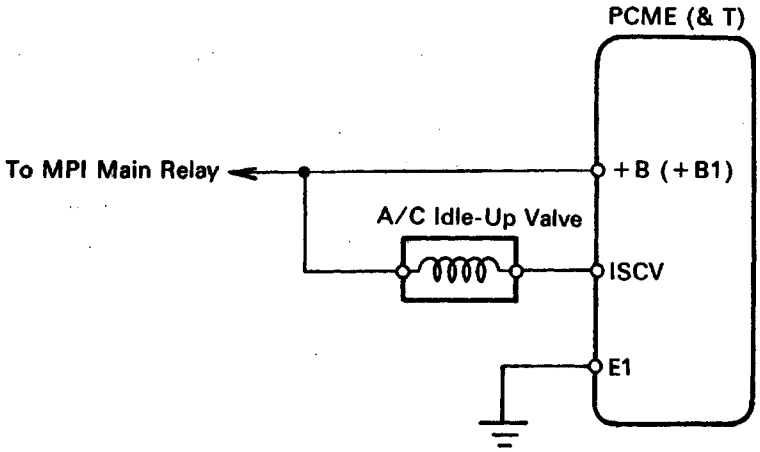

P05670
P01447

Z02880

EG0E2–0A

COMPONENTS FOR REMOVAL AND INSTALLATION

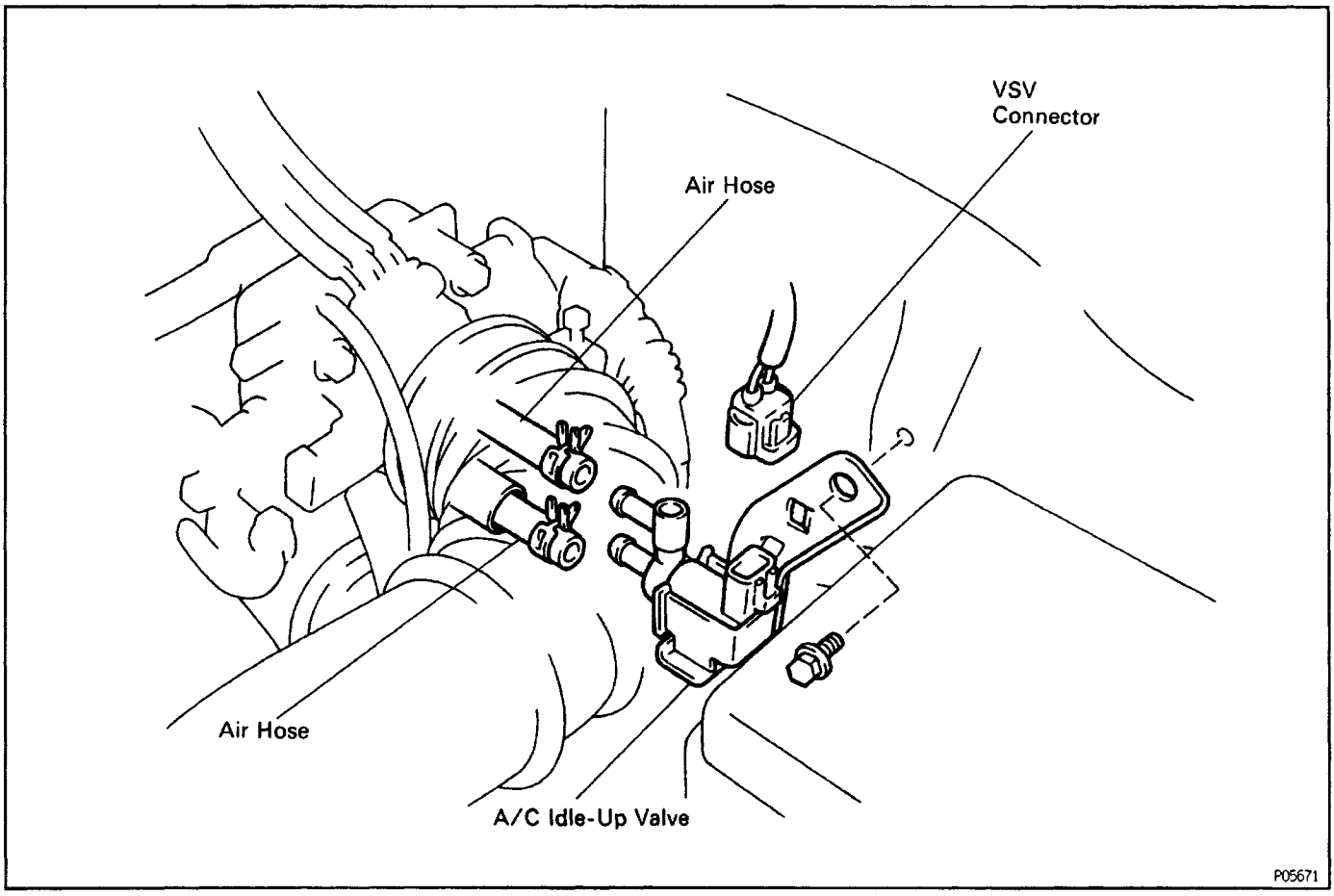

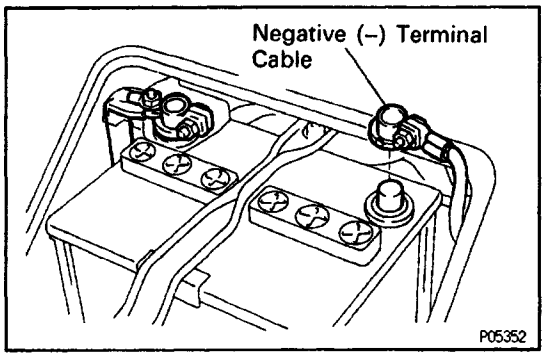

EG14M–01

A/C IDLE–UP VALVE INSPECTION

(See Components for Removal and Installation)

1. DISCONNECT CABLE FROM NEGATIVE TERMINAL OF BATTERY

CAUTION: Turn the ignition switch to "LOCK". Disconnect the negative terminal from the battery. Wait at least 20 seconds before proceeding with work.

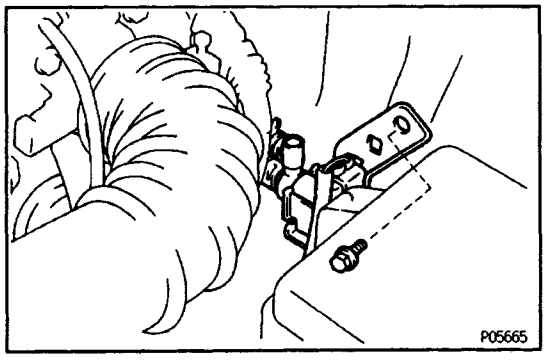

2. REMOVE IDLE–UP VALVE

(a) Disconnect the idle–up valve connector.

(b) Remove the mounting bolt.

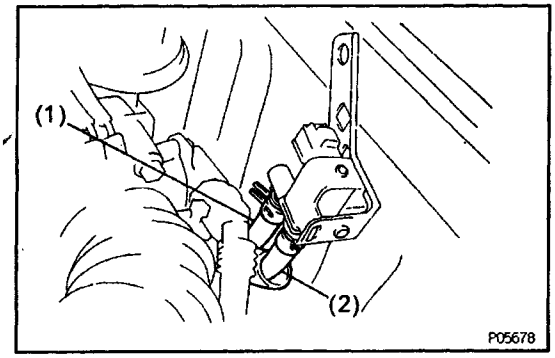

(c) Disconnect the following and hoses, and remove the idle–up valve:
(1) Air hose (from IACV) from port E of idle–up valve
(2) Air hose (from intake manifold) from port F of idle –up valve

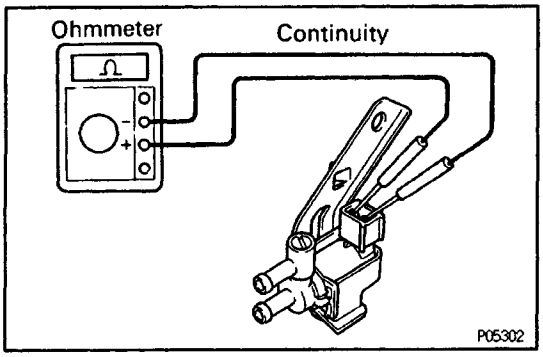

3. INSPECT IDLE –UP VALVE

A. Inspect idle–up valve for open circuit

Using an ohmmeter, check that there is continuity between the terminals.

Resistance (Cold):

30–34Ω

If there is no continuity, replace the idle –up valve.

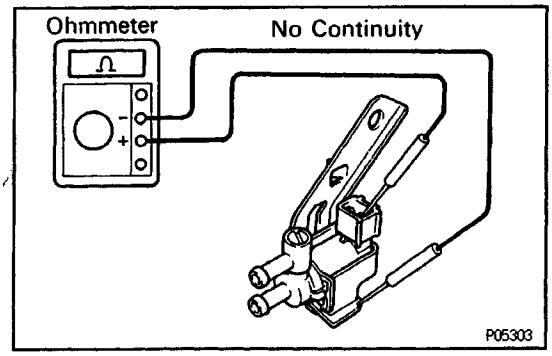

B. Inspect idle–up valve for ground

Using an ohmmeter, check that there is no continuity between each terminal and the body.
If there is continuity, replace the idle–up valve.

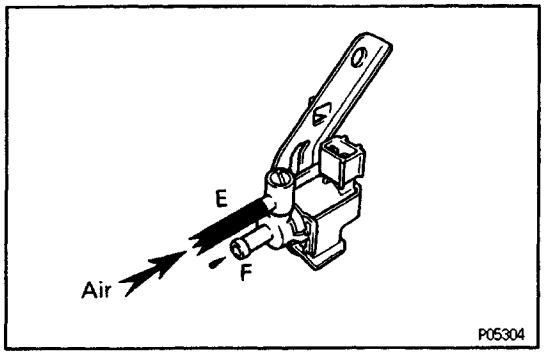

C. Inspect idle–up valve operation

(a) Check that the air does not flow from port E to port F.

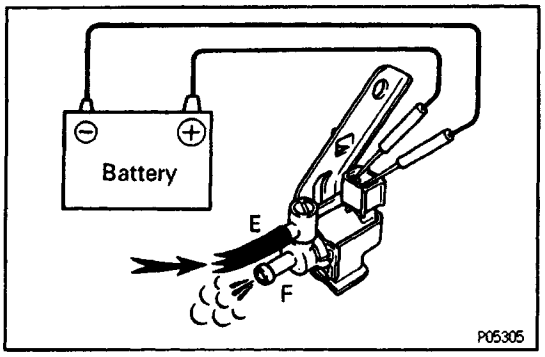

(b) Apply battery voltage across the terminals.
(c) Check that the air flows from port E to port F.
If operation is not as specified, replace the idle–up valve.

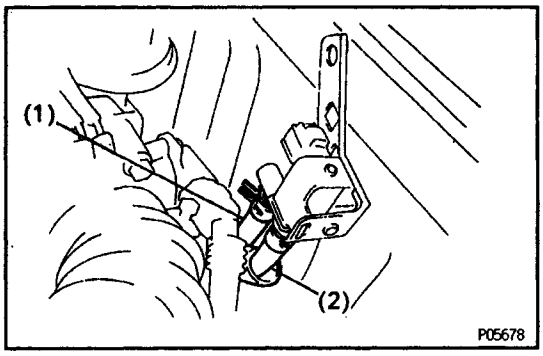

4. REINSTALL IDLE–UP VALVE

(a) Connect the following and hoses:

(1) Air hose (from IACV) from port E of idle–up valve

(2) Air hose (from intake manifold) from port F of idle –up valve

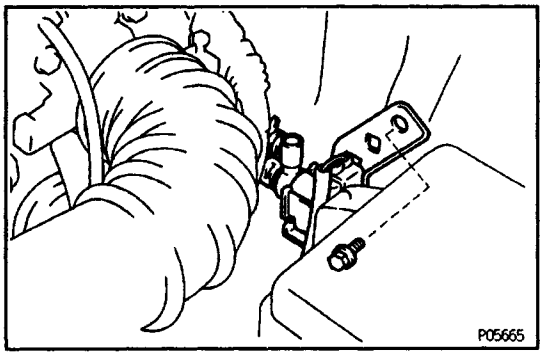

(b) Install the idle–up valve with the bolt.

(c) Connect the idle–up valve connector.

5. RECONNECT CABLE TO NEGATIVE TERMINAL OF BATTERY

CIRCUIT OPENING RELAY

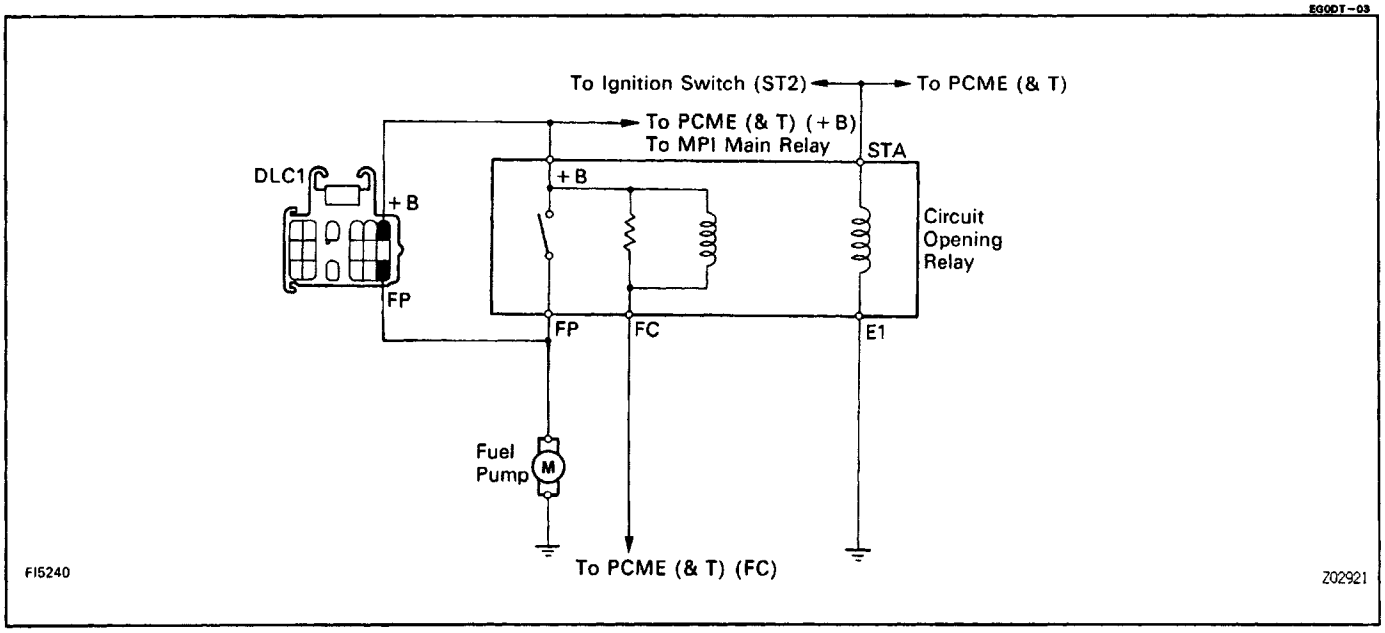

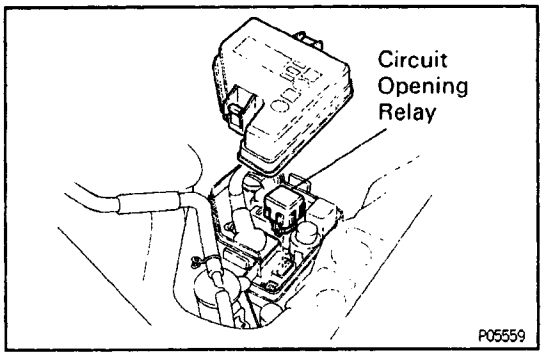

CIRCUIT OPENING RELAY ("C/OPN") INSPECTION EG146–01

7. REMOVE CIRCUIT OPENING RELAY

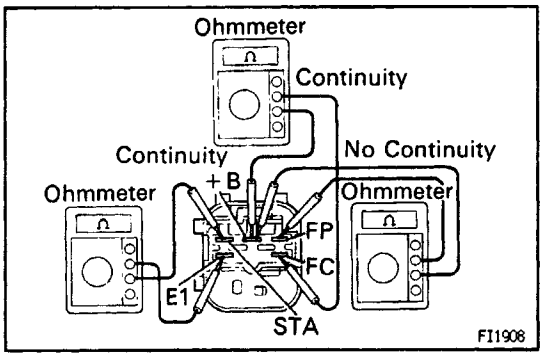

2. INSPECT CIRCUIT OPENING RELAY

A. Inspect relay continuity

(a) Using an ohmmeter, check that there is continuity between terminals STA and E1.

(b) Check that there is continuity between terminals +B and FC.

(c) Check that there is no continuity between terminals +B and FP.

If continuity is not as specified, replace the relay.

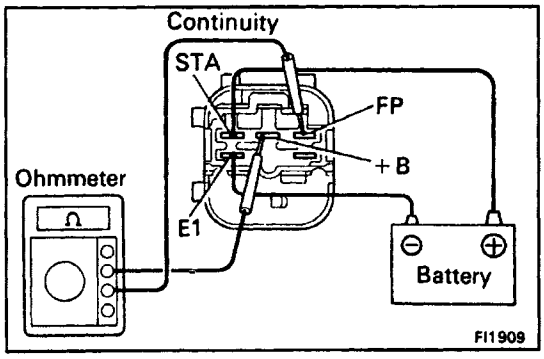

B. Inspect relay operation

(a) Apply battery voltage across terminals STA and E1.

(b) Using an ohmmeter, check that there is continuity between terminals +B and FP.

If operation is not as specified, replace the relay.

3. REINSTALL CIRCUIT OPENING RELAY

MPI SYSTEM

DESCRIPTION

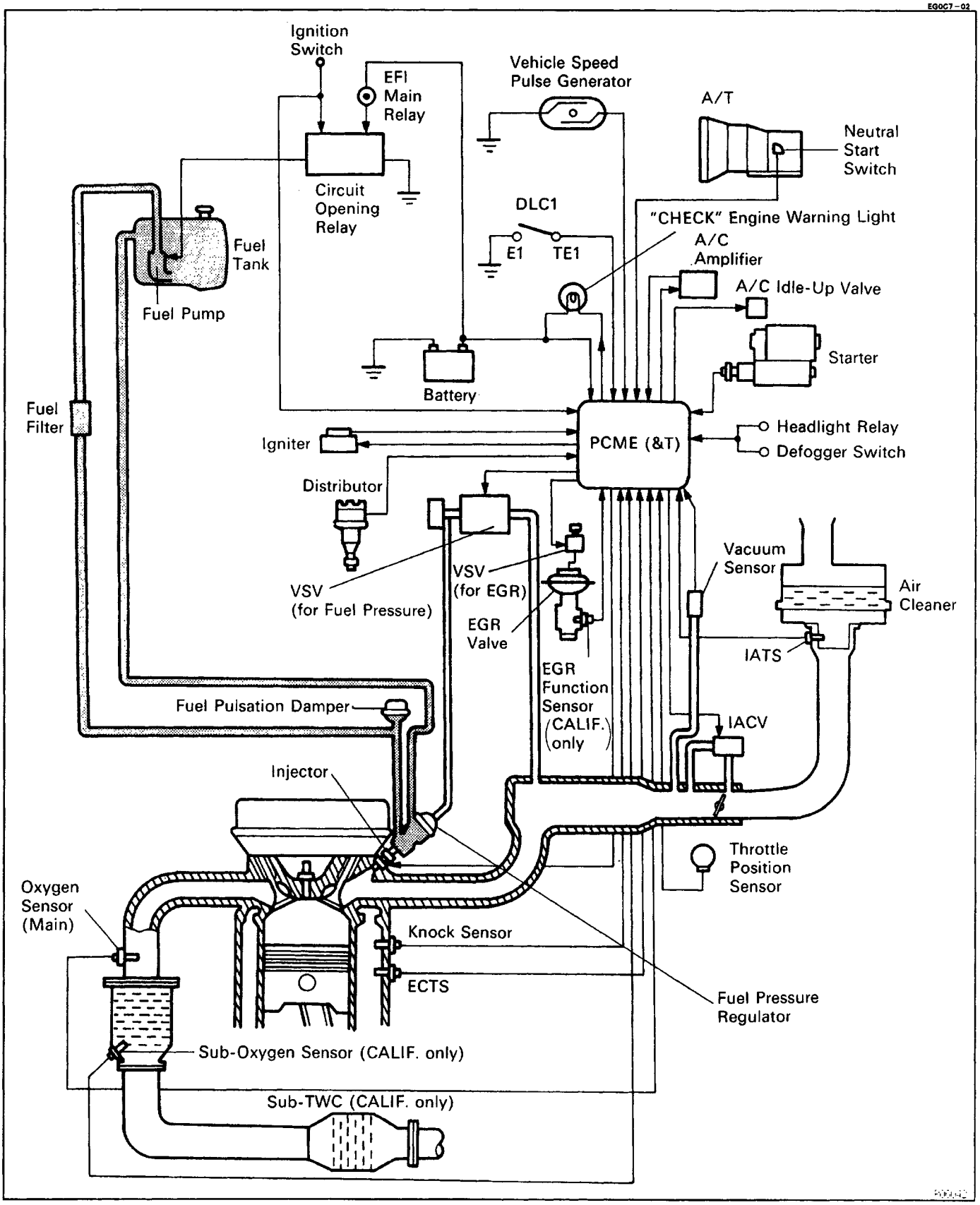

The MPI system is composed of three basic sub–systems: Fuel, Air Induction and Electronic Control Systems.

FUEL SYSTEM

Fuel is supplied under constant pressure to the MPI injectors by an electric fuel pump. The injectors inject a metered quantity of fuel into the intake port in accordance with signals from the PCME (& T) (Powertrain Control Module (Engine & Transmission)).

AIR INDUCTION SYSTEM

The air induction system provides sufficient air for engine operation.

ELECTRONIC CONTROL SYSTEM

The MR2 5S–FE engine is equipped with a TOYOTA Computer Controlled System (TCCS) which centrally controls the MPI, El, IAC diagnosis systems etc. by means of a Powertrain Control Module (Engine & Transmission) (PCME (& T)–formerly MPI computer) employing a microco–mputer.

The PCME (& T) controls the following functions:

1. Electronic Fuel Injection

The PCME (& T) receives signals from various sensors indicating changing engine operation conditions such as:
Intake manifold pressure
Intake air temperature
Coolant temperature
Engine rpm
Throttle valve opening angle
Exhaust oxygen content etc.
The signals are utilized by the PCME (& T) to determine the injection duration necessary for an optimum air–fuel ratio.

2. Electronic Ignition (EI)

The PCME (& T) is programmed with data for optimum ignition timing under any and all operating conditions. Using data provided by sensors which monitor various engine functions (rpm, coolant temperature, etc.), the microcomputer (PCME (& T)) triggers the spark at precisely the right instant.

3. Idle Speed Control (IAC)

The PCME (& T) is programmed with target idling speed values to respond to different engine conditions (coolant temperature, air conditioner ON/OFF, etc.) Sensors transmit signals to the PCME (& T) which controls the flow of air through the by–pass of the throttle value and adjust idle speed to the target value.

4. Diagnosis

The PCME (& T) detects any malfunctions and abnormalities in the sensor network and lights a “CHECK” engine warning light on the combination meter. At the same time, trouble is identified and a diagnostic trouble code is recorded is recorded by the PCME (& T). The diagnostic trouble code can be read by the number of bl inks of the ”CHECK” engine warning light when terminals TE 1 and E1 are connected. The diagnostic trouble codes are referred to the later page.
(See page EG2–209)

5. Fail–Safe Function

In the event of the sensor malfunction, a back–up circuit will take over to provide minimal drivability, and the ”CHECK” engine warning light will illuminate.

DIAGNOSIS SYSTEM

EG11Z–01

DESCRIPTION

The PCME (& T) contains a built–in self–diagnosis system by which troubles with the engine signal network are detected and a “CHECK” engine warning light on the combination meter lights up.
By analyzing various signals as shown in the later table (See page EG2–209) the PCME (& T) detects system malfunctions relating to the sensors or actuators.
The self–diagnosis system has two modes, a normal mode and a test mode.
If a malfunction is detected when in the normal mode, the PCME (& T) lights up the “CHECK” engine warning light to inform the driver of the occurrence of a malfunction. (For some codes the light does not come on.) The light goes off automatically when the malfunction has been repaired. But the diagnostic trouble code(s) remains stored in the PCME (& T) memory (except for code No. 16). The PCME (& T) stores the code(s) until it is cleared by removing the EFI fuse with the ignition switch off.
The diagnostic trouble code can be read by the number of blinks of the ”CHECK” engine warning light when TE1 and E1 terminals on the data link connector 1 are connected. When 2 or more codes are indicated, the lowest number (code) will appear first.
If a malfunction is detected when in the test mode, the PCME (& T) lights up the “CHECK” engine warning light to inform the technician of the occurrence of a malfunction (except for code Nos. 42, 43 and 51). In this case, TE2 and E1 terminals on the data link connector 1 should be connected as shown later. (See page EG2–206).
In the test mode, even if the malfunction is corrected, the malfunction code is stored in the PCME (& T) memory even when the ignition switch is off (except code Nos.42, 43 and 51). This also applies in the normal mode. The diagnostic mode (normal or test) and the output of the ”CHECK” engine warning light can be selected by connecting the TE1, TE2 and E1 terminals on the data link connector 1, as shown later.
A test mode function has been added to the functions of the self–diagnosis system of the normal mode for the purpose of detecting malfunctions such as poor contact, which are difficult to detect in the normal mode. This function fills up the self–diagnosis system. The test mode can be implemented by the technician following the appropriate procedures of check terminal connection and operation described later. (See page EG2–206)

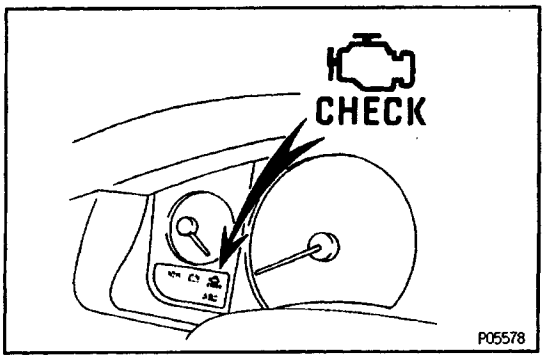

”CHECK” ENGINE WARNING LIGHT CHECK

1. The “CHECK” engine warning light will come on when the ignition switch is placed at ON and the engine is not running.
2. When the engine is started, the “ CHECK” engine warning light should go off.
   If the light remains on, the diagnosis system has detected a malfunction or abnormality in the system.

DIAGNOSTIC TROUBLE CODES OUTPUT

(Normal mode)

To obtain an output of diagnostic trouble codes, proceed as follows:

1. Initial conditions
   (a) Battery voltage 11 V or more
   (b) Throttle valve fully closed (throttle position sensor IDL points closed)
   (c) Transmission in neutral range
   (d) Accessories switched OFF
   (e) Engine at normal operating temperature
2. Turn the ignition switch ON. DO not start the engine.

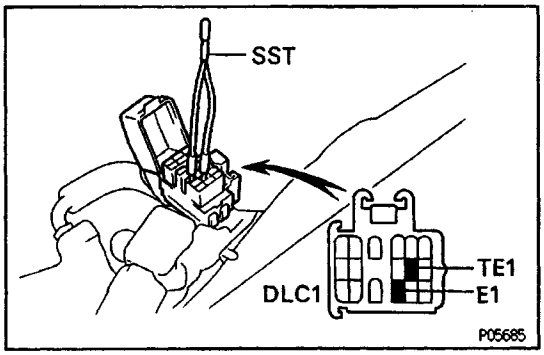

3. Using SST, connect terminals TE1 and E1 of the data link connector 1.
   SST 09843–18020

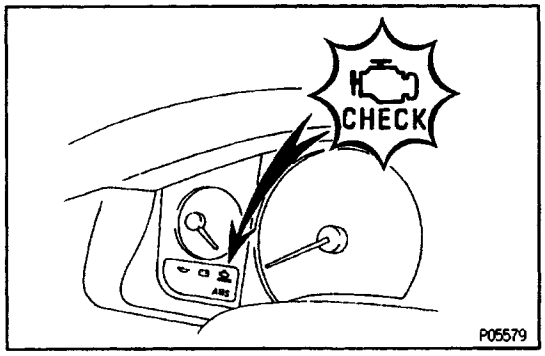

4. Read the diagnostic trouble code as indicated by the number of flashes of the “CHECK” engine warning light.

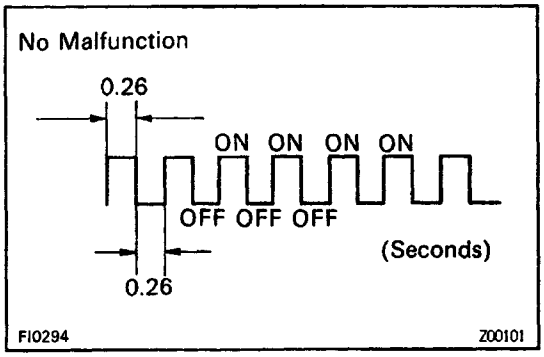

Diagnostic Trouble Codes (See page EG2–209)

(a) Normal System Operation (no malfunction)

- The light will alternately blink ON and OFF at 0.26–second intervals.

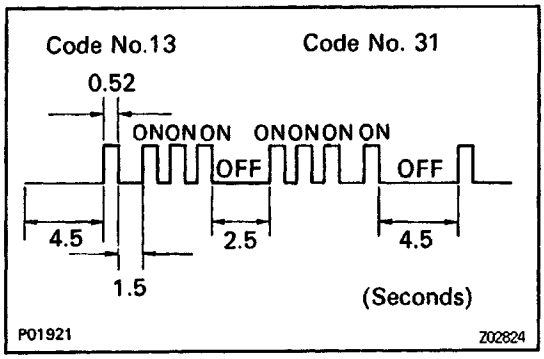

(b) Malfunction Code Indication

In the event of a malfunction, the light will blink every 0.52–seconds. The first number of blinks will equal the first digit of a 2–digit diagnostic trouble code and, after a 1.5–second pause, the 2nd number of blinks will equal the 2nd. If there are two or more codes, there will be a 2.5–second pause between each code.

After all the codes have been output, there will be a 4.5 second pause and they will all be repeated as long the terminals TE1 and E1 of the data link connector 1 are connected.

HINT: In the event of a number of trouble codes, indication will begin from the smaller value and con–tinue to the larger.

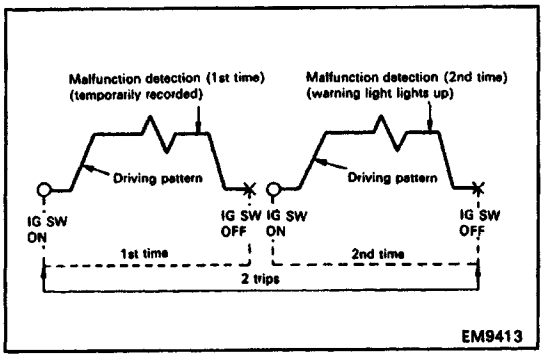

(c) (2 trip detection logic)

Diagnostic trouble codes 25, 26 27 and 71 use “2 trip detection logic”. With this logic, when a malfunction is first detected, the malfunction is temporarily stored in the PCME (& T) memory. If the same case is detected again during the second drive test, this second de–tection causes the “CHECK” engine warning light to light up.

The 2 trip repeats the same mode a 2nd time. (How–ever, the ignition switch must be turned OFF between the 1 st time and 2nd time.) In the Test Mode, the ”CHECK” engine warning light lights up the 1 st time a malfunction is detected.

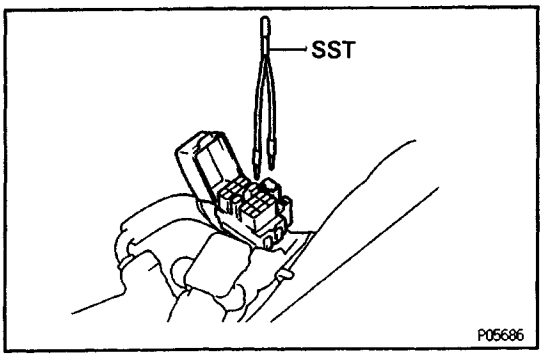

5. After the diagnosis check, remove SST.

SST 09843–18020

(Test mode)

HINT:

- Compared to the normal mode, the test mode has high sensing ability to detect malfunctions.
- It can also detect malfunctions in the starter signal circuit, air conditioner signal and park/ neutral switch signal.
- Furthermore, the same diagnostic items which are detected in the normal mode can also be detected in the test mode.

To obtain an output of diagnostic trouble codes, proceed as follows:

1. Initial conditions
   (a) Battery voltage 11 volts or more
   (b) Throttle valve fully closed (throttle position sensor IDL points closed)
   (c) Transmission in neutral range
   (d) Accessories switched OFF
2. First, using SST, connect terminals TE2 and E1 of the data link connector 1.
   SST 09843–18020

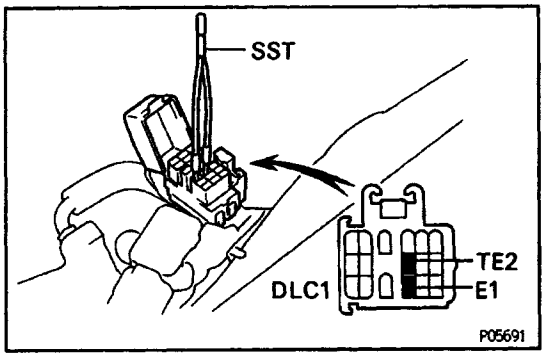

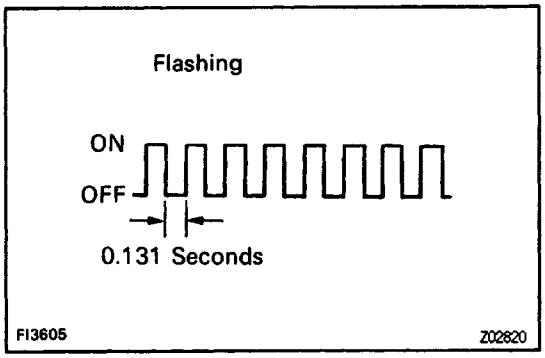

3. Turn the ignition switch ON.

HINT: To confirm that the test mode is operating, check that the “CHECK” engine warning light flashes when the ignition switch is turned ON.

4. Start the engine and drive the vehicle at a speed of 10 km/h (6 mph) or higher.
5. Simulate the conditions of the malfunction described by the customer.

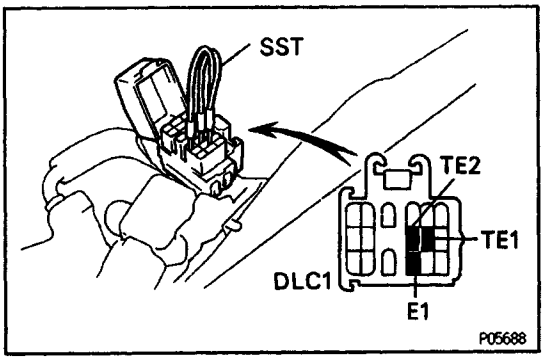

6. Using SST, connect terminals TE1 and E1 of the data link connector 1.
   SST 09843–18020
7. Read the diagnostic trouble code as indicated by the number of flashes of the “CHECK” engine warning light. (See page EG2–209)

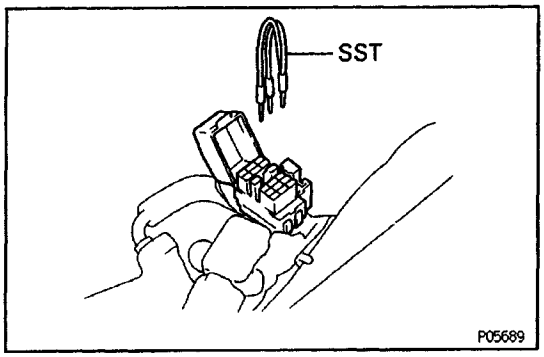

8. After the diagnosis check, remove SST.
   SST 09843–18020

HINT:

- The test mode will not start if terminals TE2 and E1 are connected after the ignition switch is turned on.
- The starter signal and vehicle speed signal will be diagnosed by the PCME (& T) as malfunctions, and code Nos. 42, and 43 will be output, if the operation in step 4 is not performed.
- When the automatic transmission shift lever is in the “D”, “2”, “L” or “R” shift position, or when the air conditioner is on or when the accelerator pedal is depressed, code “51” (Switch condition signal) is output, but this is not abnormal.

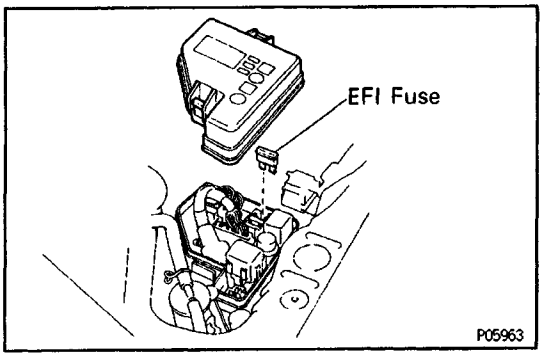

DIAGNOSTIC TROUBLE CODE CANCELLATION

1. After repair of the trouble area, the diagnostic trouble code retained in memory by the PCME (& T) must be cancelled out by removing the EFI fuse (115 A) for 10 seconds or more, depending on ambient temperature (the lower the temperature, the longer the fuse must be left out) with the ignition switch OFF.

HINT:

- Cancellation can also be done by removing the battery negative (–) terminal, but in this case, other memory systems (clock, etc.) will also cancelled out.
- If the diagnostic trouble code is not cancelled out, it will be retained by the PCME (& T) and appear along with a new code in the event of future trouble.
- If it is necessary to work on engine components requiring removal of the battery terminal, a check must first be made to see if a diagnostic trouble code has been recorded.

2. After cancellation, perform road test of the vehicle to check that a normal code is now read on the “CHECK” engine warning light.
   If the same diagnostic trouble code appears, it indi–cates that the trouble area has not been repaired thoroughly.

EG124–01

DIAGNOSIS INDICATION

1. When 2 or more codes are indicated, the lowest number (code) will appear first.
2. All detected diagnostic trouble codes, except code Nos. 43 and 53 will be retained in memory by the PCME (& T) from the time of detection until cancelled out.
3. Once malfunction is cleared, the “ CHECK” engine warning light on the combination meter will go off but the diagnostic trouble code(s) remains stored in PCME (& T) memory (except for code Nos. 43 and 51).

DIAGNOSTIC TROUBLE CODES

HINT:

- If a malfunction is detected during the diagnostic trouble code check, refer to the circuit indicated in the table, and turn to the corresponding page.
- Your readings may vary from the parameters listed in the table, depending on the instruments used.

Code No.	Number of blinks "CHECK" Engine Warning Light	System	"CHECK" *1 Engine Warning Light		Diagnosis	Trouble Area	*2 Memory	See Page
			Normal Mode	Test Mode				
–	 FI1401	Normal	—	—	No trouble code is recorded. code is recorded.	—	—	—
12	 FI1606	RPM Signal	ON	N.A.	(1) No NE signal is input to PCME (PCME & T) for 2 secs. or more after STA turns ON. (2) No G signal is input to PCME (PCME & T) for 3 secs. or more between 600 – 4,000 rpm.	• Open or short in NE, G circuit • Distributor • Open or short in STA circuit • PCME (PCME & T)	○	IG–24 EG2–228 EG2–244
13	 FI1607	RPM Signal	ON	ON	(1) NE signal is not input to PCME (PCME & T) for 0.3 secs. or more when engine speed is 1,500 rpm or more. (2) No G signal is input to PCME (PCME & T) for 4 NE signal. (Test mode only)	• Open or short in NE circuit • Distributor • PCME (PCME & T)	○	IG–24
14	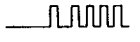 FI1608	Ignition Signal	ON	N.A.	IG signal from igniter is not input to PCME (PCME & T) for 4 – 5 consecutive ignition.	• Open or short in IGF or IGT circuit from igniter to PCME (PCME & T) • Igniter • PCME (PCME & T)	○	EG2–229 EG2–245
16 (A/T only)	 BE3931	ECT Control Signal	ON	N.A.	Normal signal is not output from PCME & T.	• PCME & T	X	—
21	 FI1609	Main Oxygen Sensor Signal	ON	N.A.	At normal driving speed (below 60 mph and engine speed is above 1,500 rpm), amplitude of oxygen sensor signal (OX) is reduced to between 0.35 – 0.70 V continuously for 60 secs. or more.	• Open or short in oxygen sensor circuit • Oxygen sensor • PCME (PCME & T)	○	EG2–232 EG2–249
22	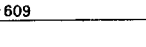 FI1610	Engine Coolant Temp. Sensor Signal	ON	ON	Open or short in engine coolant temp. sensor circuit for 0.5 sec. or more. (THW)	• Open or short in engine coolant temp. sensor circuit • Engine coolant temp. sensor • PCME (PCME & T)	○	EG2–227 EG2–243
24	 FI1611	Intake Air Temp. Sensor Signal	ON *3	ON	Open or short in intake air temp. sensor circuit for 0.5 sec. or more. (THA)	• Open or short in intake air temp. sensor circuit • Intake air temp. sensor • PCME (PCME & T)	○	EG2–226 EG2–242
25	FI2562	Air–Fuel Ratio Lean Malfunction	ON	ON	(1) Oxygen sensor output is less than 0.45 V for at least 90 secs. when oxygen sensor is warmed up (racing at 2,000 rpm). – only for code 25 (2) When the engine speed varies by more than 20 rpm over the preceding crank angle period during a period of 20 seconds during idling with the coolant temp. 60°C (140°F) or more. (Calif. only) *6 (2 trip detection logic) (1) and (2)	• Engine ground bolt loose • Open in E1 circuit • Open in injector circuit • Fuel line pressure (Injector blockage, etc.) • Open or short in oxygen sensor circuit • Oxygen sensor • Ignition system • Engine coolant temp. sensor • MAP • PCME (PCME & T)	○	EG2–26 EG2–227 EG2–232 EG2–243 EG2–249
26 *4	FI2563	Air–Fuel Ratio Lean Malfunction	ON	ON		• Engine ground bolt loose • Open in E1 circuit • Short in injection circuit • Fuel line pressure (Injector leakage, etc.) • Open or short in oxygen sensor circuit • Oxygen sensor • Engine coolant temp. sensor • MAP • Compression pressure • PCME (PCME & T)	○	

DIAGNOSTIC TROUBLE CODES (Cont'd)

Code No.	Number of blinks "CHECK" Engine Warning Light	System	"CHECK" *1 Engine Warning Light		Diagnosis	Trouble Area	Memory *2	See page
			Normal Mode	Test Mode				
27*4	FI3294	Sub–Oxygen Sensor Signal	ON	ON	When sub-oxygen sensor is Warmed up and full acceleration continued for 2 seconds, output of main oxygen sensor is 0.45 V or more (rich) and output of sub-oxygen sensor is 0.45 V or less (lean). (OX2) *5 (2 trip detection logic)	• Short or open in sub-oxygen sensor circuit • Sub-oxygen sensor • PCME (PCME & T)	○	EG2–232 EG2–249
31	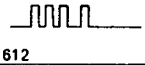 FI1612	Manifold Absolute Pressure sensor Signal	ON	ON	Open or short detected continuously for 0.5 sec. or more in MAP circuit. (PIM)	• Open or short in vacuum sensor circuit • MAP • PCME (PCME & T)	○	EG2–222 EG2–236
41	 FI1614	Throttle Position Sensor Signal	ON*3	ON	Open or short detected continuously for 0.5 sec. or more in throttle sensor (VTA) circuit.	• Open or short in throttle position sensor circuit • Throttle position sensor • PCME (PCME & T)	○	EG2–224 EG2–238
42	 FI1615	Vehicle Speed Pulse Generator Signal	OFF	OFF	(M/T) SPD signal is not input to PCM for at least 8 seconds during high load driving with engine speed between 2,400 rpm and 5,000 rpm. (A/T) PNS OFF and engine speed 3,000 rpm or more.	• Open or short in vehicle speed sensor circuit • Vehicle speed pulse generator • PCME (PCME & T)	○	—
43	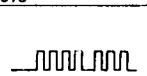 FI1616	Starter Signal	N.A.	OFF	No starter signal is not input to PCM even once after ignition.	• Open or short in starter signal circuit • Open or short in IG SW or MPI main relay circuit • PCME (PCME & T)	X	EG2–228 EG2–244
52	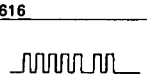 FI1618	Knock Sensor Signal	ON	N.A.	In area of knock control signal from knock sensor is not input to PCM for 0.65 sec. (KNK)	• Open or short in knock sensor circuit • Knock sensor (looseness, etc.) • PCME (PCME & T)	○	—
71*4	 FI2622	EGR System Malfunction	ON	ON	50 seconds from start of EGR operation, EGR gas temp. is less than 70°C with coolant temp. 80°C (176°F) or more.	• Open in EGR function sensor circuit • Open in VSV circuit for EGR • EGR vacuum hose disconnected, valve stuck • Clogged in EGR gas passage • PCME (PCME & T)	○	EG2–233 EG2–249
51	 FI1617	Switch Condition signal	N.A.	OFF	Displayed when A/C is ON IDL contact OFF or shift position in "R", "D", "2", or "1" ranges with the check terminals E1 and TE1 connected.	• A/C switch circuit • Throttle position sensor IDL circuit • Park/Neutral switch circuit • Accelerator pedal, cable • PCME (PCME & T)	X	EG2–224 EG2–238

REMARKS:

*1: "ON" displayed in the diagnosis mode column indicates that the "CHECK" Engine Warning Light is lighted up when a malfunction is detected. "OFF" indicates that the "CHECK" Engine Warning Light does not,,light up during malfunction diagnosis, even if a malfunction is detected. "N.A." indicates that the item is not included in malfunction diagnosis.

*2: "O" in the memory column indicates that a diagnostic code is recorded in the PCME (PCME & T) memory when a malfunction occurs. "X" indicates that a diagnostic code is not recorded in the PCME (PCME & T) memory even if a malfunction occurs. Accordingly, output of diagnostic results in normal or test mode is performed with the ignition switch ON.

*3: The "CHECK" Engine Warning Light comes on if malfunction occurs only to California specifications.

*4: Code 26, 27 and 71 is used only for California specifications.

*5: "2 trip detection logic" (See page EG2–205)

DIAGNOSTIC TROUBLE CODE DETECTION DRIVING PATTERN

Purpose of the driving pattern.

(a) To simulate diagnostic trouble code detecting condition after diagnostic trouble code is recorded.

(b) To check that the malfunction is corrected when the repair is completed, confirming that diagnostic trouble code is no longer detected.

Code No	21	Main Oxygen Sensor–Circuit

Malfunction: Deterioration of Main Oxygen Sensor

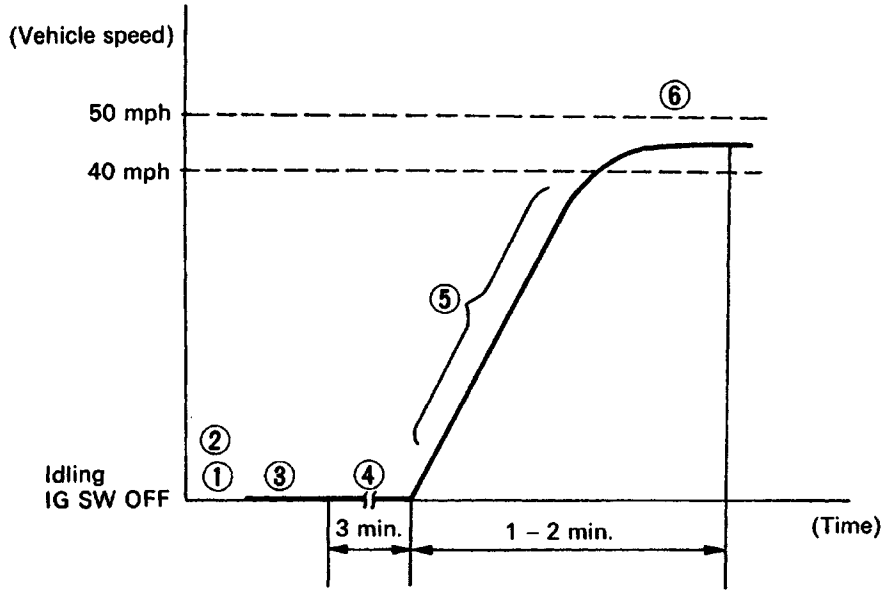

P01713

(1) Disconnect the EFI fuse (15 A) for 10 seconds or more, with ignition switch OFF.

(2) Initiate test mode: Connect terminals TE2 and E1 of DLC1 with ignition switch OFF.

(3) Start the engine and warm the engine up with all accessory switches OFF.

(4) After the engine is warmed up, let it idle for 3 minutes.

(5) Accelerate gradually and maintain at approximately 1,500 rpm, or within the 1,300 to 1,700 rpm range. Turn the A/C on, and drive in “D” for automatic, or in case of manual transmission, upshift appropriately. Shift carefully so that the engine speed would not fall below 1,200 rpm. Depress the accelerator pedal gradually and maintain a steady speed to avoid engine braking.

(6) Maintain the vehicle speed at 40 – 50 mph.

Keep the vehicle running for 1 – 2 minutes after staring acceleration.

HINT: If any malfunction is detected, the “CHECK” engine warning light will light up during step (6).

NOTICE: If this procedure is not strictly followed, you cannot detect the malfunction.

V00912

DIAGNOSTIC TROUBLE CODE DETECTION DRIVING PATTERN (Cont'd)

Purpose of the driving pattern.

(a) To simulate diagnostic trouble code detecting condition after diagnostic trouble code is recorded.

(b) To check that the malfunction is corrected when the repair is completed, confirming that diagnostic trouble code is no longer detected.

Code No	25	Air–Fuel Ratio Lean Malfunction
	26	Air–Fuel Ratio Rich Malfunction

Malfunction: Open or Short in Main Oxygen Sensor

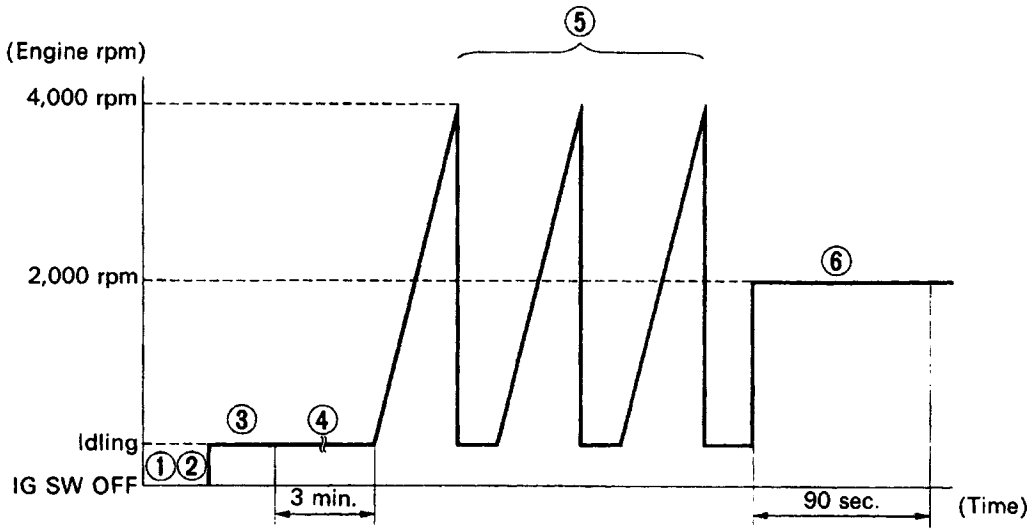

P02491

① Disconnect the EFI fuse (15 A) for 10 seconds or more, with ignition switch OFF.
② Initial test mode: Connect terminal TE2 and E1 of DLC1 with ignition switch OFF.
③ Start the engine and warm the engine up, with all accessory switches OFF.
④ After the engine is warmed up, let it idle for 3 minutes.
⑤ Accelerate rapidly to 4,000 rpm three times.
⑥ Maintain at 2,000 rpm for 90 seconds.

HINT: If a malfunction is detected, the "CHECK" engine warning light will light up during step (6).
NOTICE: If this procedure is not strictly followed, you cannot detect the malfunction.

V00913

DIAGNOSTIC TROUBLE CODE DETECTION DRIVING PATTERN (Cont'd)

Purpose of the driving pattern.

.

(a) To simulate diagnostic trouble code detecting condition after diagnostic trouble code is recorded.
(b) To check that the malfunction is corrected when the repair is completed, confirming that diagnostic trouble code is no longer detected.

Code No		
	25	Air–Fuel Ratio Lean Malfunction (California)
	26	Air–Fuel Ratio Lean Malfunction (California)

Malfunction: Open or Short in OXygen Sensor, Open or Short in Injector Leak, Blockage, Loose Engine Ground Bolt

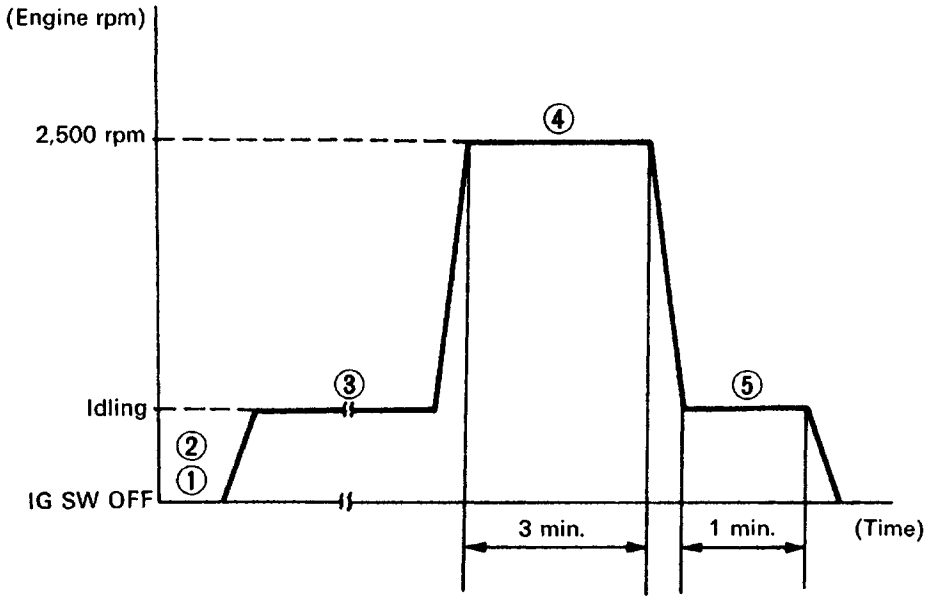

P01711

HINT: Before this test, check the feedback voltage for oxygen sensor.

① Disconnect the ER fuse (15 A) for 10 seconds or more, with ignition switch OFF.
② Initiate test mode: Connect terminals TE2 and E1 of DLC1 with ignition switch OFF.
③ Start the engine and warm the engine up.
④ After the engine is warmed up, maintain at 2,500 rpm for 3 minutes.
⑤ Let it idle for 1 minute.

HINT: If any malfunction is detected, the "CHECK" engine warning light will light up during step (5) .
NOTICE: If this procedure is not strictly followed, you cannot detect the malfunction.

V00914

DIAGNOSTIC TROUBLE CODE DETECTION DRIVING PATTERN (Cont'd)

Purpose of the driving pattern.

(a) To simulate diagnostic trouble code detecting condition after diagnostic trouble code is recorded.

(b) To check that the malfunction is corrected when the repair is completed, confirming that diagnostic trouble code is no longer detected.

Code No	27	Sub–Oxygen Sensor Circuit (California)

Malfunction: Open or Short in Sub–Oxygen Sensor

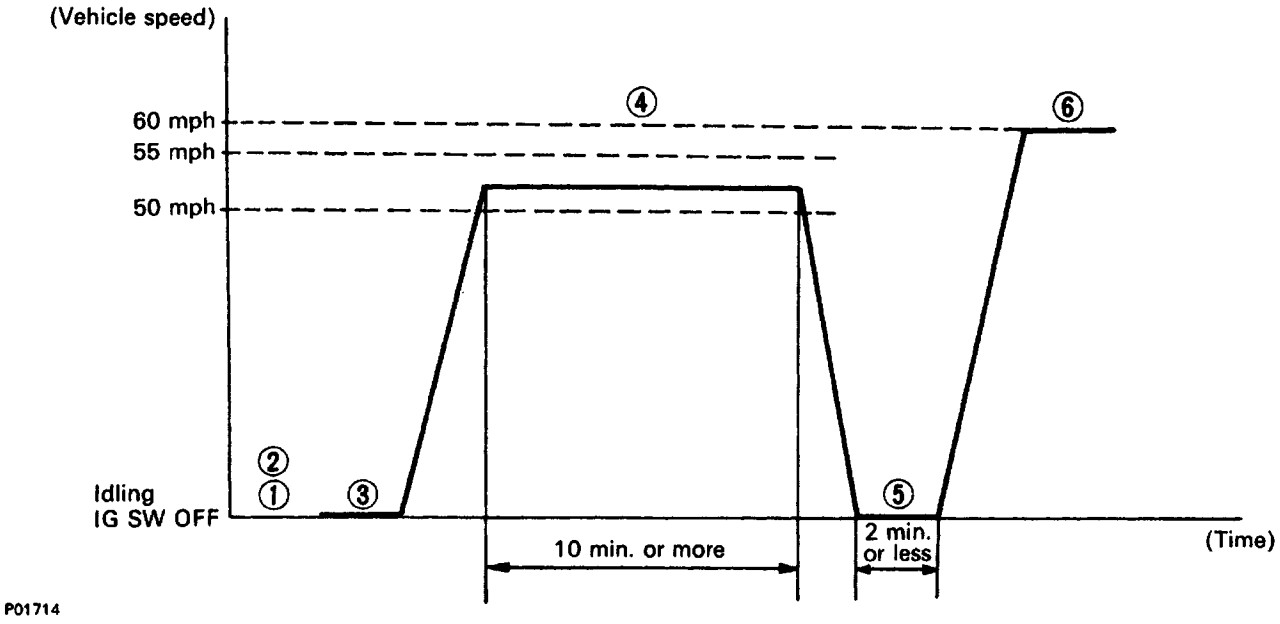

① Disconnect the EFI fuse (15 A) for 10 seconds or more, with ignition switch OFF.
② Initiate test mode: Connect terminals TE2 and E1 of DLC1 with ignition switch OFF.
③ Start the engine and warm the engine up, with all accessory switches OFF.
④ After the engine is warmed up, let it drive at 50 – 55 mph for 10 minutes or more.
⑤ After driving, stop at a safe place and perform idling for 2 minutes or less.
⑥ After performing the idling in (5) perform acceleration to 60 mph with the throttle fully open.

HINT: If any malfunction is detected, the "CHECK" engine warning light will light up during step (6).
NOTICE: If this procedure is not strictly followed, you cannot detect the malfunction.

DIAGNOSTIC TROUBLE CODE DETECTION DRIVING PATTERN (Cont'd)

Purpose of the driving pattern.

(a) To simulate diagnostic trouble code detecting condition after diagnostic trouble code is recorded.

(b) To check that the malfunction is corrected when the repair is completed, confirming that diagnostic trouble code is no longer detected.

Code No.	71	EGR System Malfunction (California)

Malfunction: Short in VSV Circuit for EGR, Loose EGR Hose, Valve Stuck

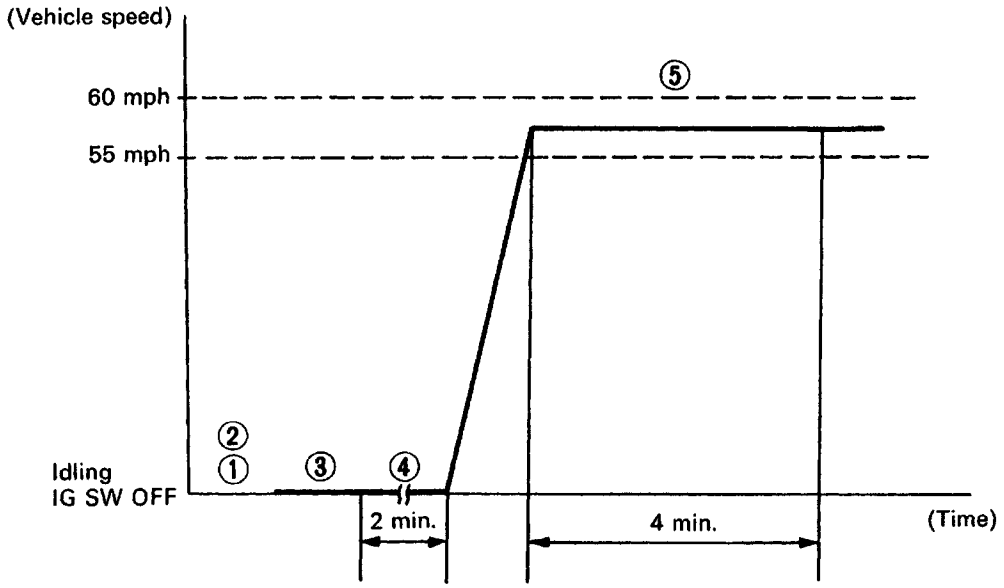

P01712

① Disconnect the fuse EFI (15 A) for 10 seconds or more, with ignition switch OFF.

② Initiate test mode: Connect terminals TE2 and E1 of DLC1 with ignition switch OFF.

③ Start engine and warm engine up.

④ After engine is warmed up, let it idle for 3 minutes.

⑤ With the A/C switch OFF and transmission in 5th gear ("D" range for A/T), drive at 55 – 60 mph for 4 minutes.

HINT: If any malfunction is detected, the "CHECK" engine warning light will light up during step (5) .

NOTICE; If this procedure is not strictly followed, you cannot detect the malfunction.

EG127–01

DIAGNOSIS CIRCUIT INSPECTION

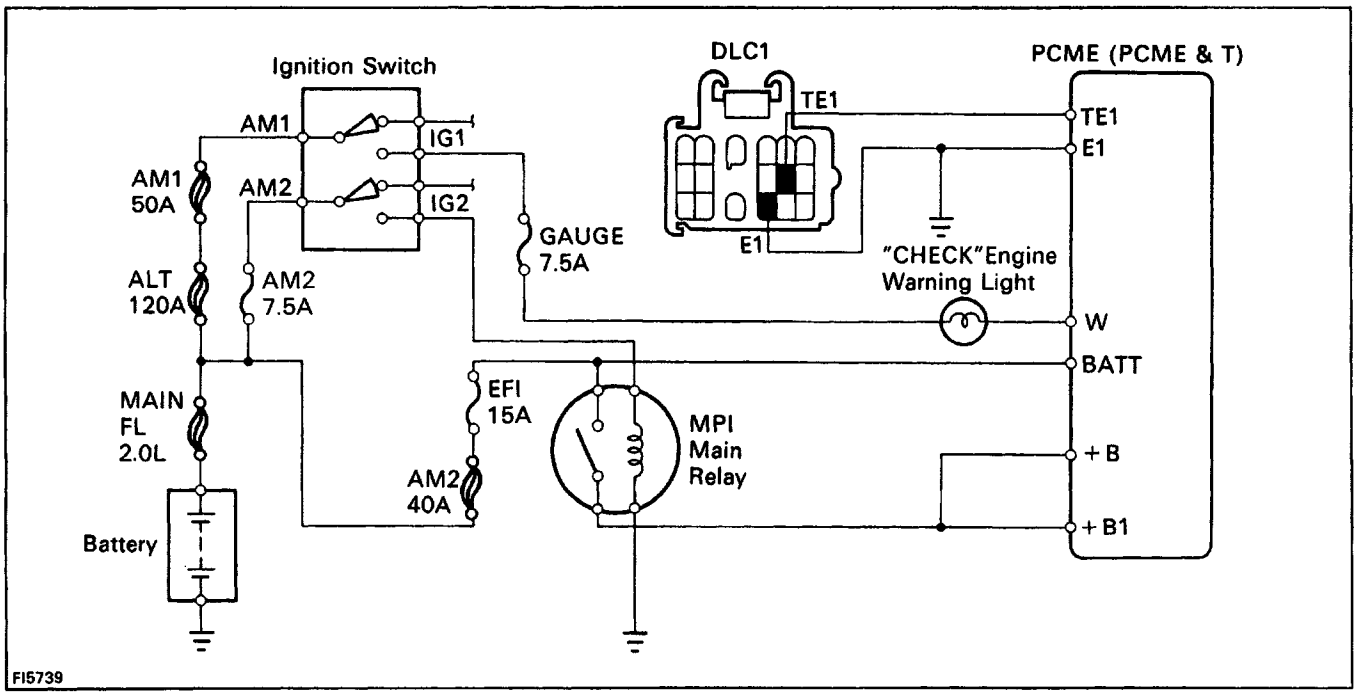

1.

Does “CHECK” engine warning light come on when ignition switch is at ON ?
- YES → System normal.
- NO → Does “CHECK” engine warning light come on when PCME (PCME & T) terminal W is grounded to the body ?
  - YES → Check wiring between PCME (PCME & T) terminal E1 and body ground.
    - OK → Try another PCME (PCME & T).
    - BAD → Repair or replace.
  - NO → Check bulb, fuse and wiring between PCME (PCME & T) and ignition switch.
    - BAD → Repair or replace.

2.

Does “CHECK” engine warning light go off when the engine is started ?
- YES → System normal.
- NO → Check wiring between PCME (PCME & T) and ”CHECK” engine warning light.
  - BAD → Repair.
  - NO → Is there diagnostic code output when DLC1 terminals TE1 and E1 connected ?
    - NO → Check wiring between PCME (PCME & T) terminal TE1 and DLC1 terminal TE1, and PCME (PCME & T) terminal E1 and DLC1 terminal E1.
      - OK → Try another PCME (PCME & T).
    - YES → Does “CHECK” engine warning light go off after repair according to malfunction code ?
      - NO → Further repair required.
      - YES → System OK → Cancel out diagnostic trouble code.

V00917

EGR FUNCTION SENSOR (Calif.)

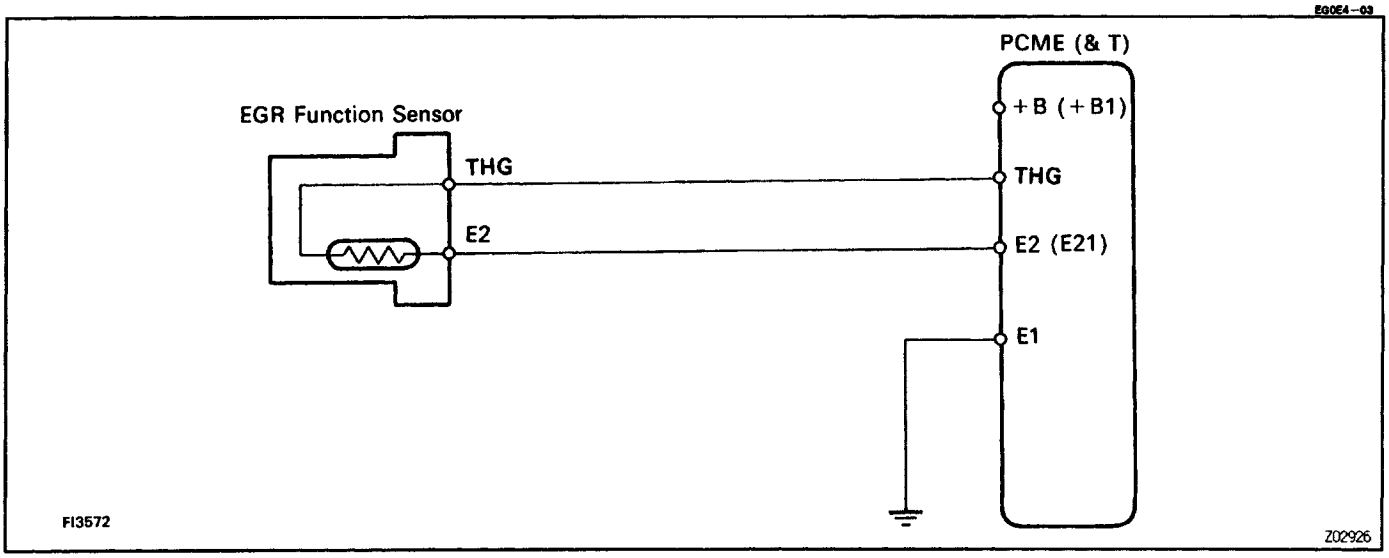

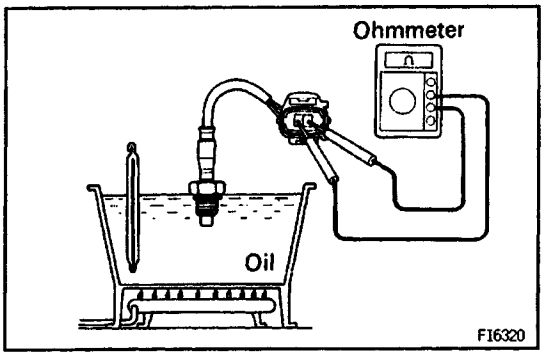

EGR FUNCTION SENSOR INSPECTION

1. REMOVE EGR FUNCTION SENSOR

2. INSPECT EGR FUNCTION SENSOR

Using an ohmmeter, measure the resistance between the terminals.

Resistance:

69 – 89 kΩat 50˚C (112˚F)

11 – 15 kΩat 100˚ C (212˚F)

2 – 4 kΩat 150˚C (302˚F)

If the resistance is not as specified, replace the sensor.

3: REINSTALL EGR FUNCTION SENSOR

ELECTRONIC PARTS LOCATION

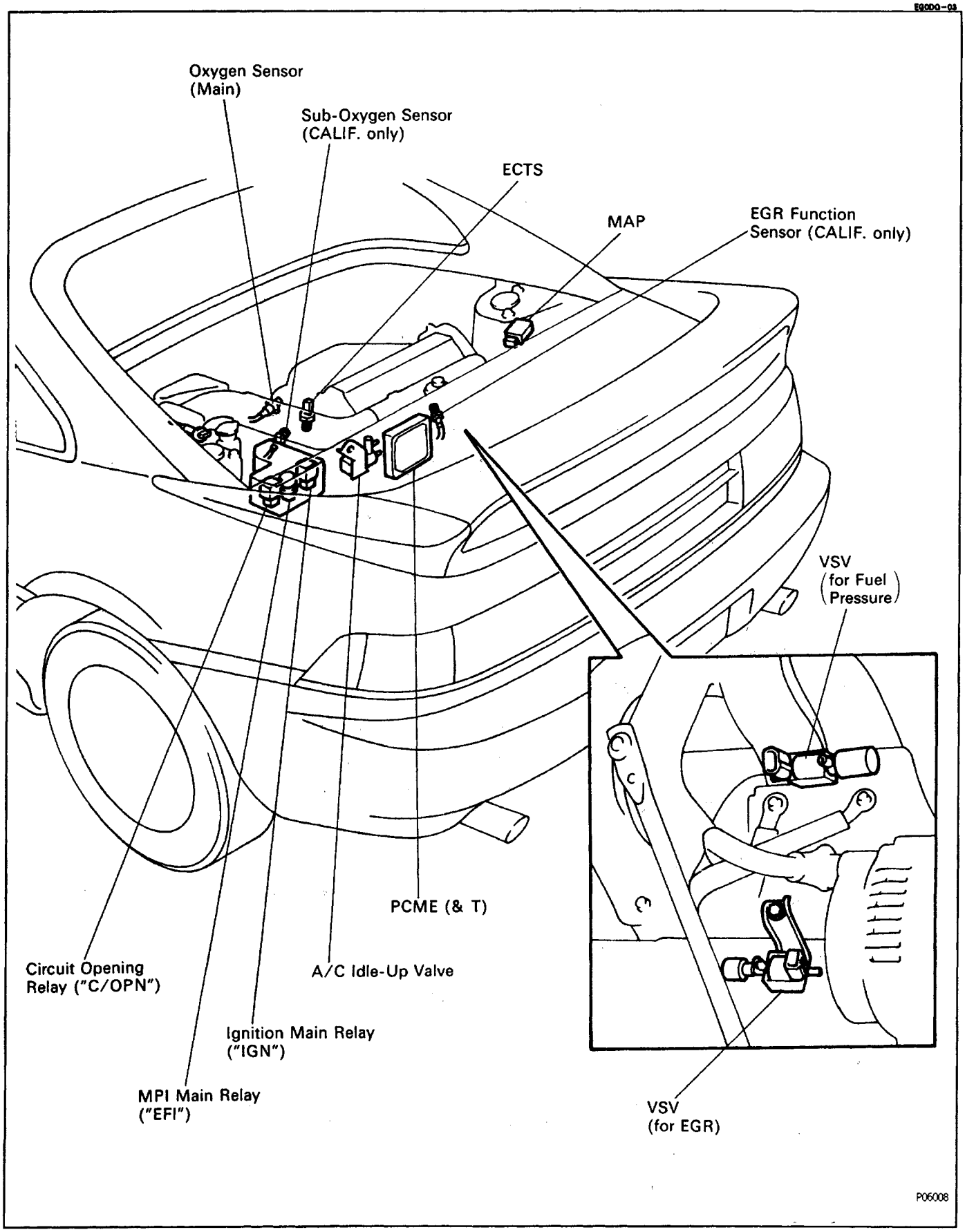

ENGINE COOLANT TEMPERATURE SENSOR (ECTS)

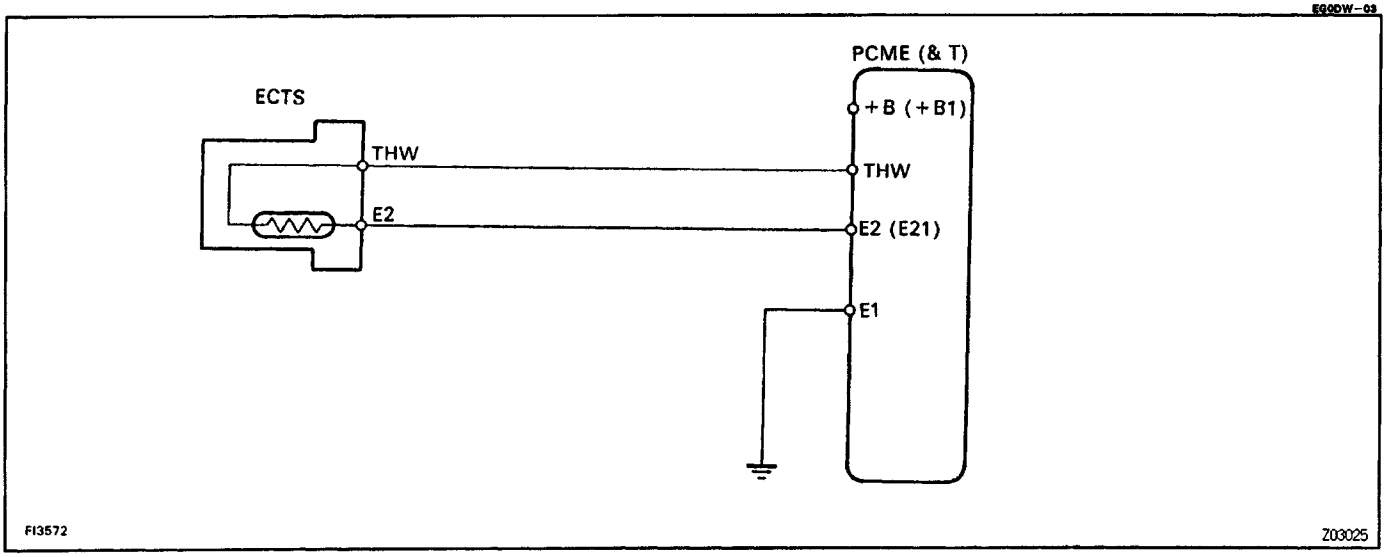

EG0DX–03

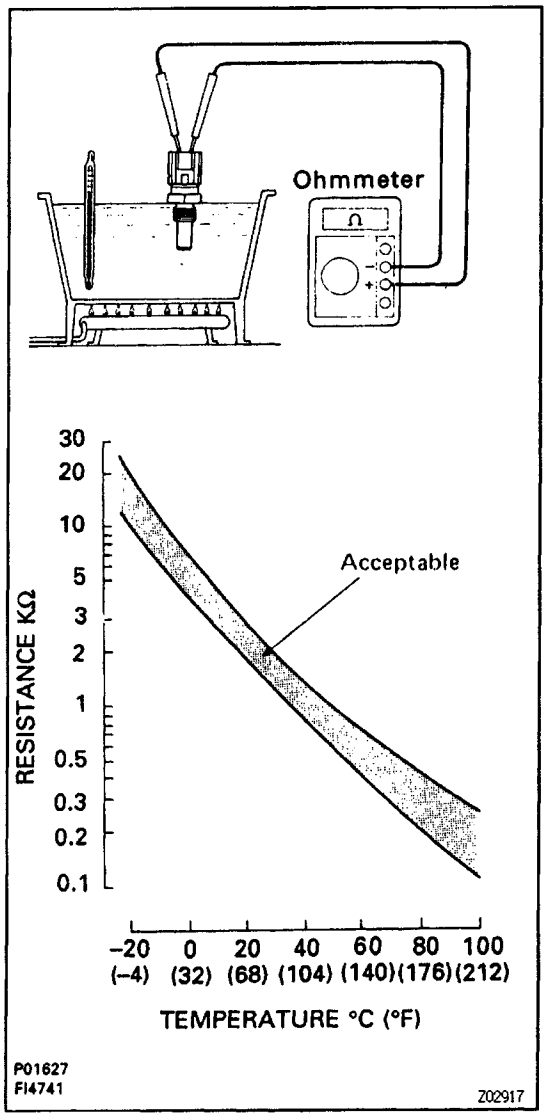

ECTS INSPECTION

1. REMOVE ECTS

2. INSPECT ECTS

Using an ohmmeter, measure the resistance between the terminals.

Resistance:

Refer to the chart graph

If the resistance is not as specified, replace the ECTS.

3. REINSTALL ECTS

FUEL CUT RPM

B6151–01

FUEL CUT PRM INSPECTION

1. WARM UP ENGINE

Allow the engine to warm up to normal operating temperature.

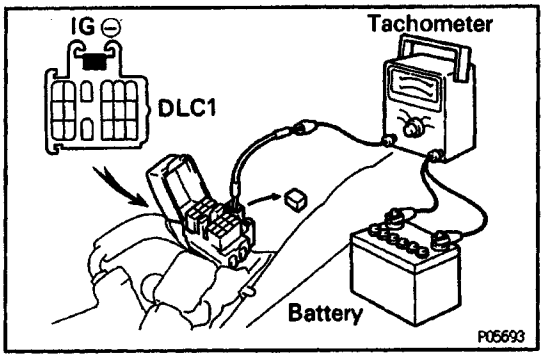

2. CONNECT TACHOMETER TO ENGINE

Connect the test probe of a tachometer to terminal IG (–) of the data link connector 1.

NOTICE:

- **Never allow the tachometer terminal to touch ground as it could result in damage to the igniter and/or ignition coil.**
- **As some tachometers are not compatible with this ignition system, we recommend that you confirm the compatibility of your before use.**

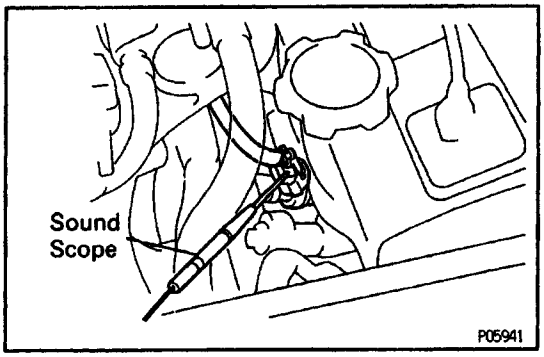

3. INSPECT FUEL CUT PRM

(a) Increase the engine speed to at least 2,500 rpm.

(b) Using a sound scope, check for injector operating noise.

(c) Check that when the throttle lever is released, injector operation noise stops momentarily and then resumes.

HINT: Measure with the A/C OFF.

Fuel return rpm:

1,500 rpm

4. DISCONNECT TACHOMETER

FUEL PRESSURE REGULATOR

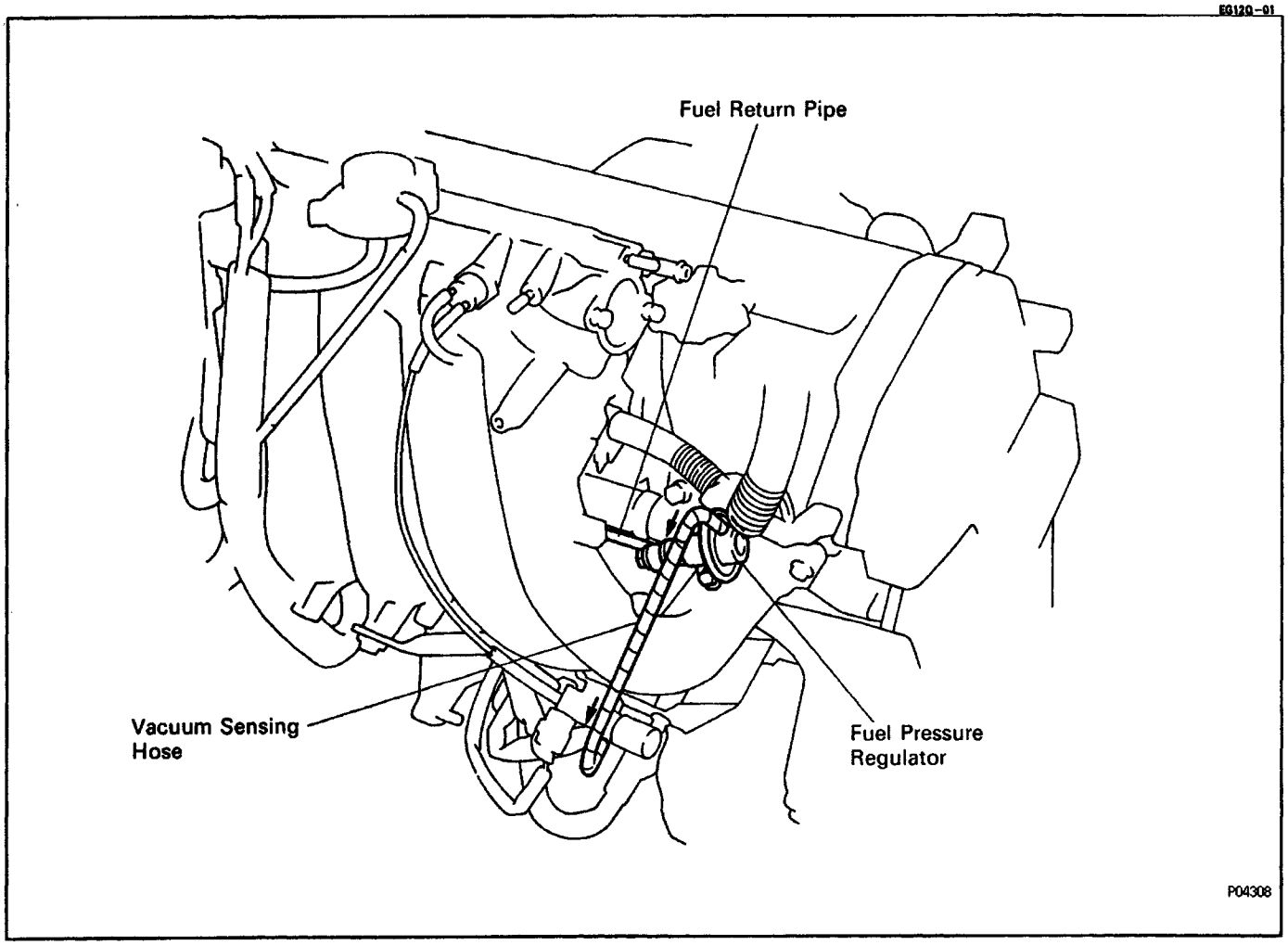

EG0D5–03

ON–VEHICLE INSPECTION

INSPECT FUEL PRESSURE

(See On–Vehicle Inspection in Fuel Pump)

COMPONENTS FOR REMOVAL AND INSTALLATION

EG12R–01

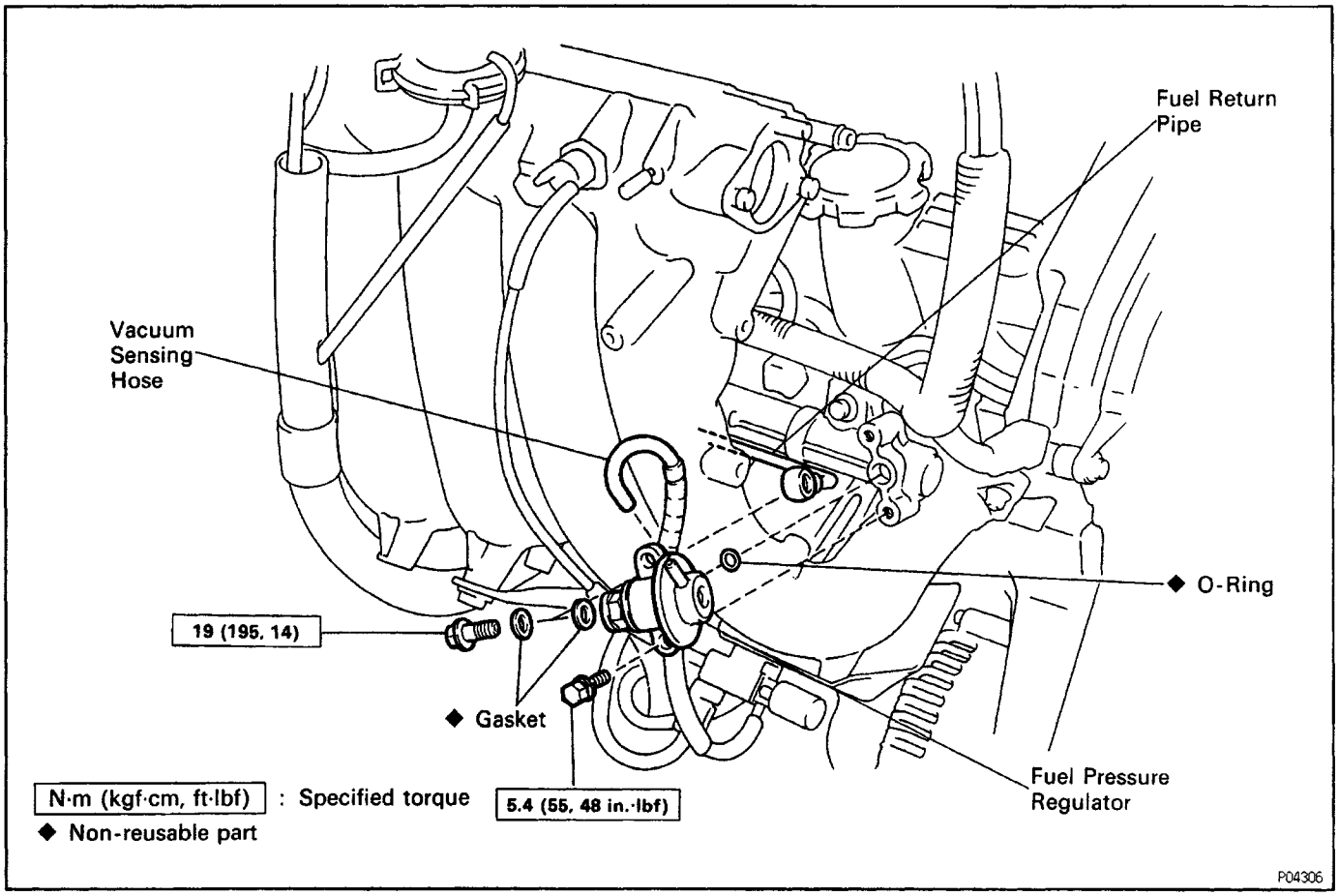

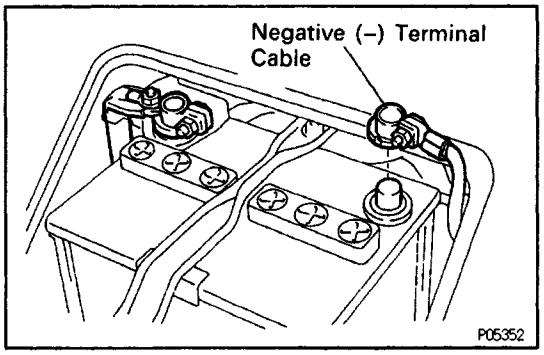

I011T–01

FUEL PRESSURE REGULATOR REMOVAL

(See Components for Removal and Installation)

1. DISCONNECT CABLE FROM NEGATIVE TERMINAL OF BATTERY

CAUTION: Turn the ignition switch to 'LOCK'. Disconnect the cable from the negative terminal of the battery. Wait at least 20 seconds before proceeding with work.

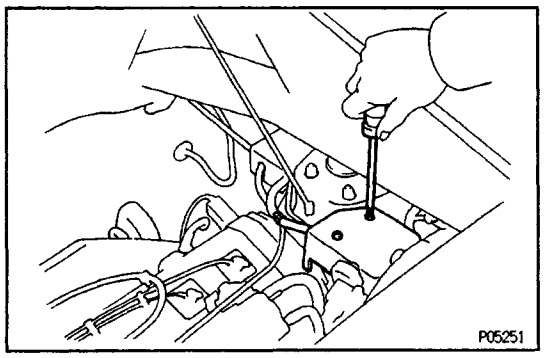

2. (w/ CRUISE CONTROL SYSTEM) REMOVE CRUISE CONTROL ACTUATOR

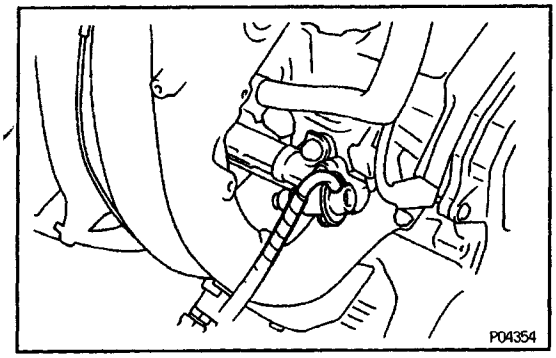

3. DISCONNECT VACUUM SENSING HOSE FROM FUEL PRESSURE REGULATOR

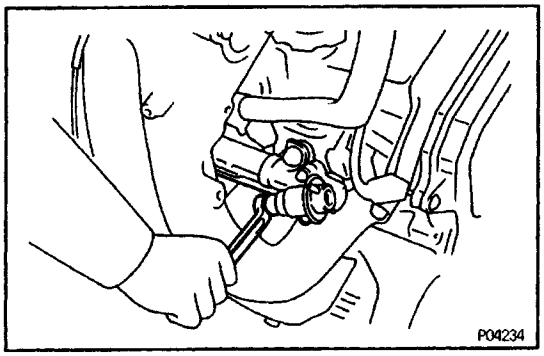

4. DISCONNECT FUEL RETURN PIPE FROM FUEL PRESSURE REGULATOR

Remove the union bolt and two gaskets, and disconnect the return pipe from the pressure regulator.

HINT:

- Put a suitable container or shop towel under the pressure regulator.
- Slowly loosen the union bolt.

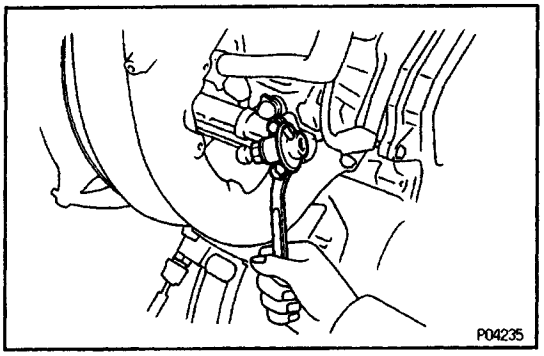

5. REMOVE FUEL PRESSURE REGULATOR

(a) Remove the two bolts, and pull out the pressure regulator.

(b) Remove the O–ring from the pressure regulator.

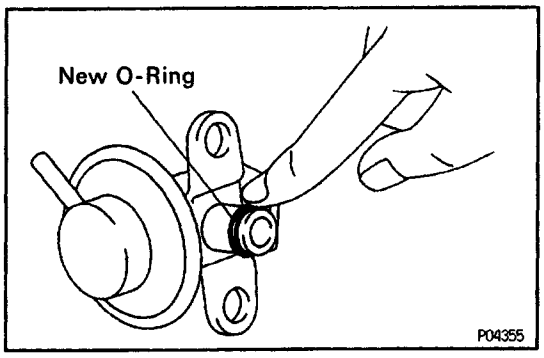

FUEL PRESSURE REGULATOR INSTALLATION

EG12U–01

(See Components for Removal and Installation)

1. INSTALL FUEL PRESSURE REGULATOR

(a) Apply a light coat of gasoline to a new O–ring, and install it to the pressure regulator.

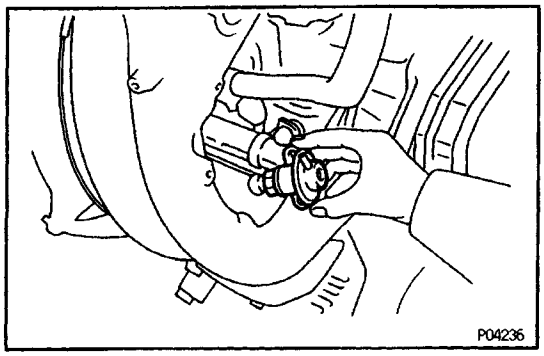

(b) Attach the pressure regulator to the delivery pipe.

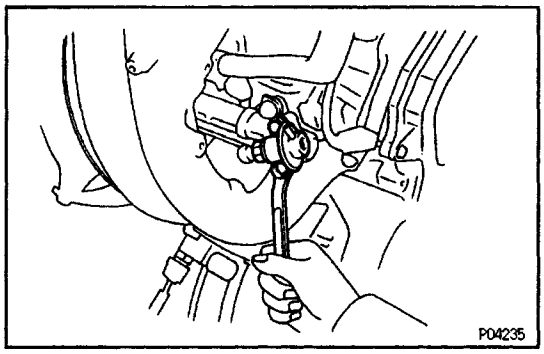

(c) Install the pressure regulator with the two bolts.
Torque: 5.4 N–m (55 kgf–cm, 48 in–lbf)

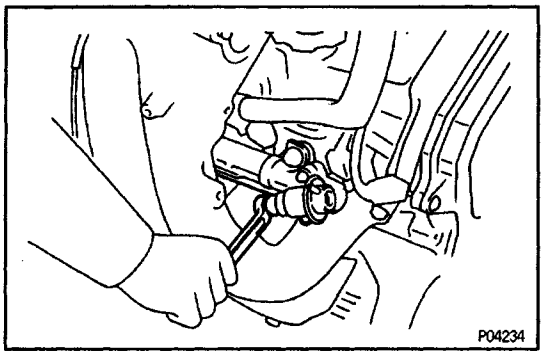

2. CONNECT FUEL RETURN PIPE TO FUEL PRESSURE REGULATOR

Install the return pipe with new two gaskets and the union bolt.
Torque: 19 N–m (195 kgf–cm, 14 ft–lbf)

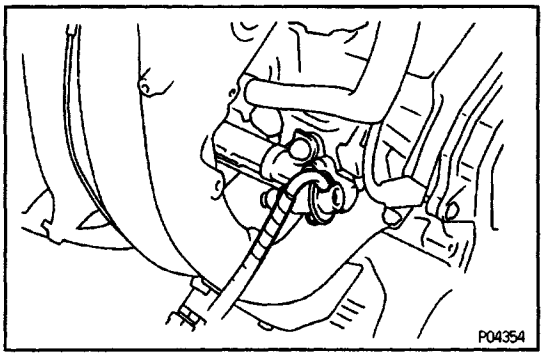

3. CONNECT VACUUM SENSING HOSE TO FUEL PRESSURE REGULATOR

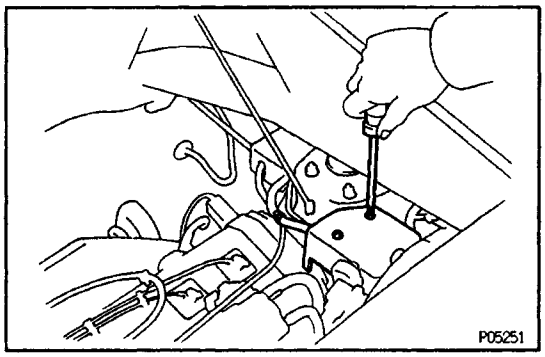

4. (w/ CRUISE CONTROL SYSTEM) INSTALL CRUISE CONTROL ACTUATOR

5. CONNECT CABLE TO NEGATIVE TERMINAL OF BATTERY

6. START ENGINE AND CHECK FOR FUEL LEAKS

FUEL PUMP

EG0CY–03

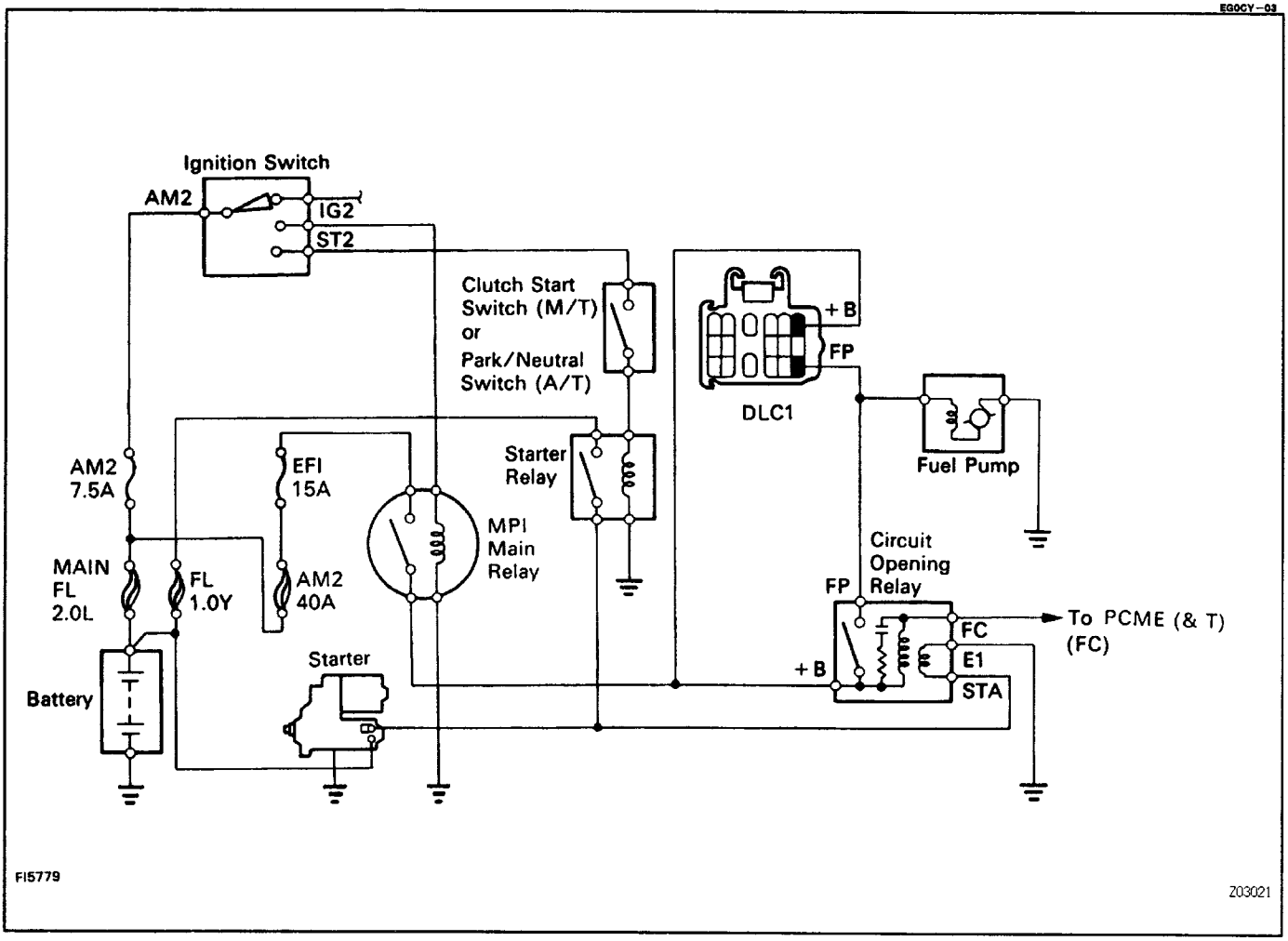

EG12E–01

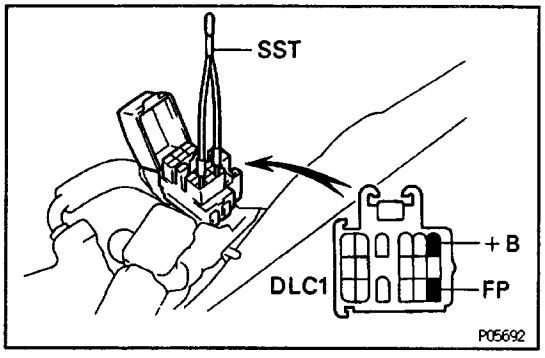

ON–VEHICLE INSPECTION

1. CHECK FUEL PUMP OPERATION

(a) Using SST, connect terminals +B and FP of the data link connector 1.
SST 09843–18020

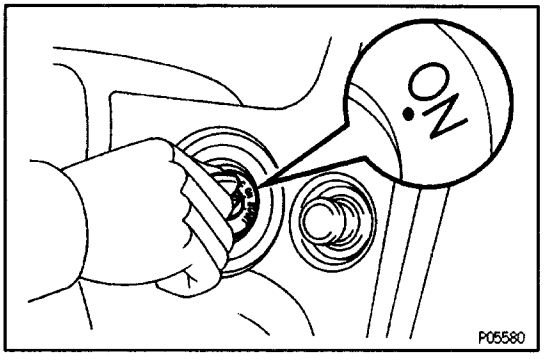

(b) Turn the ignition switch ON.
NOTICE: Do not start the engine.

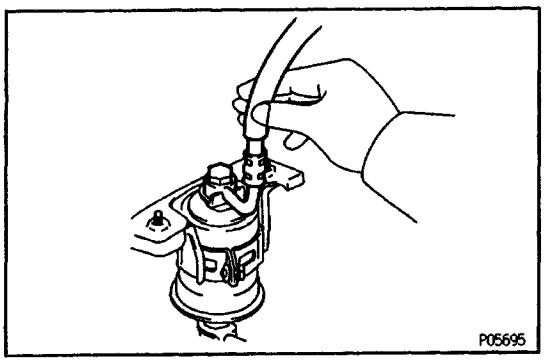

(c) Check that there is pressure in the hose from the fuel filter.

HINT: At this time, you will hear fuel return noise.

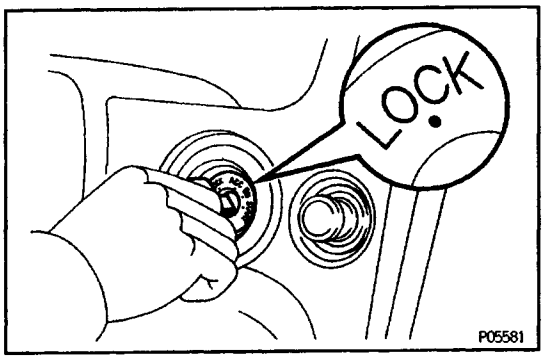

(d) Turn the ignition switch OFF.

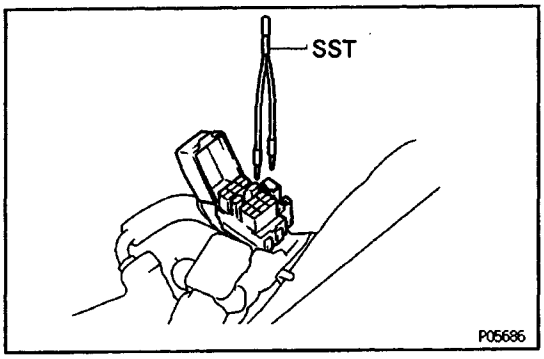

(e) Remove the SST from the data link connector 1.
SST 09843–18020

If there is no pressure, check the following parts:

- Fusible links (2.01, 1.0Y)
- H–fuse (AM2 40A)
- Fuses (EFI 15A, AM2 7.5A)
- MPI main relay
- Fuel pump
- Wiring connections

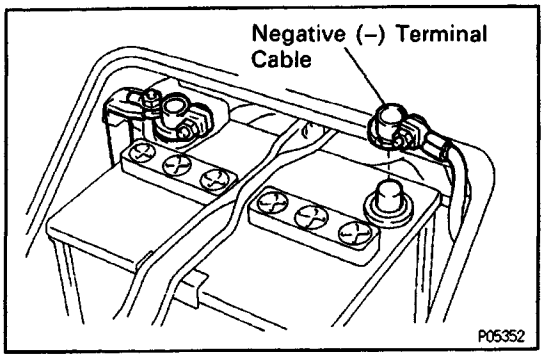

2. CHECK FUEL PRESSURE

(a) Check that the battery voltages is above 12 volts.

(b) Disconnect the cable from the negative (–) terminal of the battery.

CAUTION: Turn the ignition switch to ”LOCK”. Disconnect the negative terminal from the battery. Wait at least 20 seconds before proceeding with work.

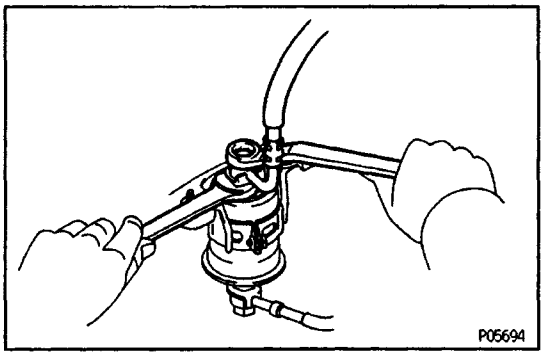

(c) Remove the union bolt and two gaskets, and disconnect the fuel inlet hose from the fuel filter outlet.

HINT:

- Put a suitable container or shop towel under the fuel filter.
- Slowly loosen the union bolt.

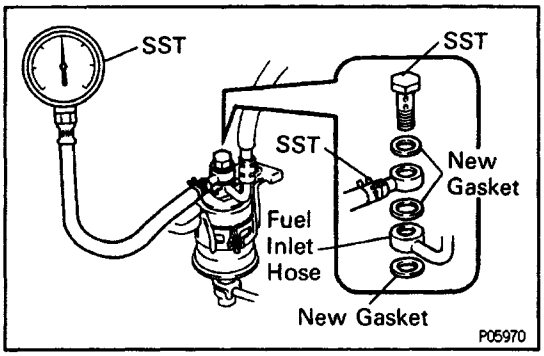

(d) install the fuel inlet hose and SST (pressure gauge) to the fuel filter with three new gaskets and SST (union bolt).

SST 09268–45012

Torque: 29 N–m (300 kgf–cm, 22 ft–lbf)

(e) Wipe off any splattered gasoline.

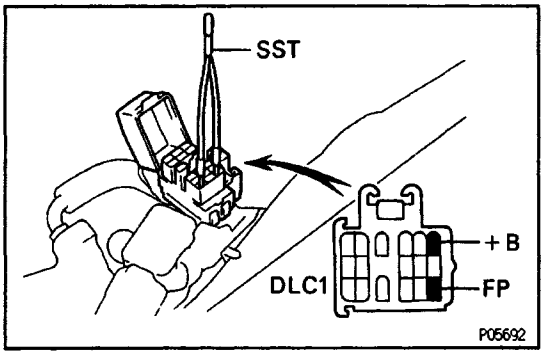

(f) Using SST, connect terminals +B and FP of the data link connector 1.

SST 09843–18020

(g) Reconnect the battery negative (–) cable.

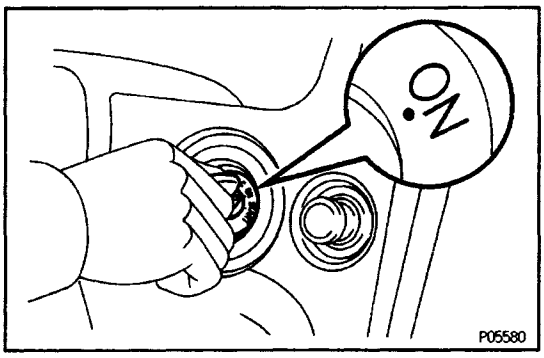

(h) Turn the ignition switch ON.

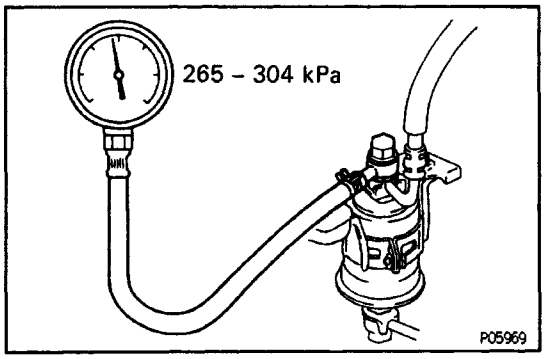

(i) Measure the fuel pressure.

Fuel pressure:

265 – 304 kPa (2.7 – 3.1 kg f/cm^2, 38 – 44 psi)

If pressure is high, replace the fuel pressure regulator.

If pressure is low, check the following parts:

- Fuel hoses and connections
- Fuel pump
- Fuel filter
- Fuel pressure regulator

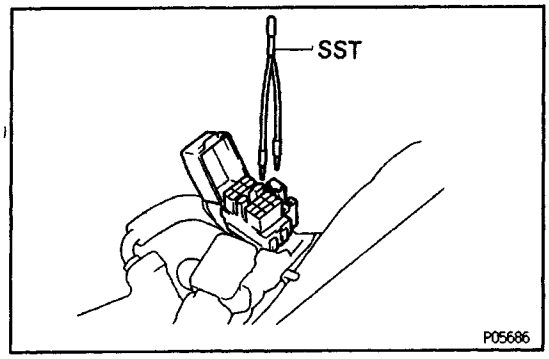

(j) Remove the SST from the data link connector 1.
SST 09483–18020

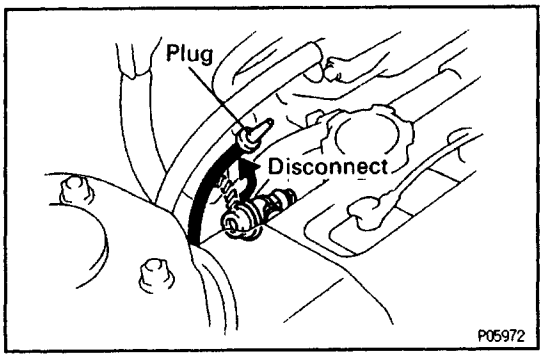

(k) Start the engine.
(l) Disconnect the vacuum sensing hose from the air intake chamber and plug the air intake chamber outlet.

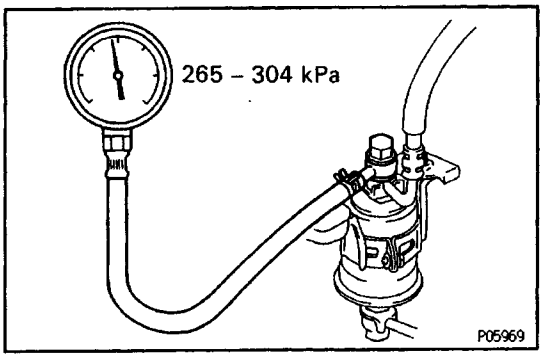

(m) Measure the fuel pressure at idle.
Fuel pressure:
265 – 304 kPa (2.7 – 3.1 kgf/cm^2, 38 – 44 psi)

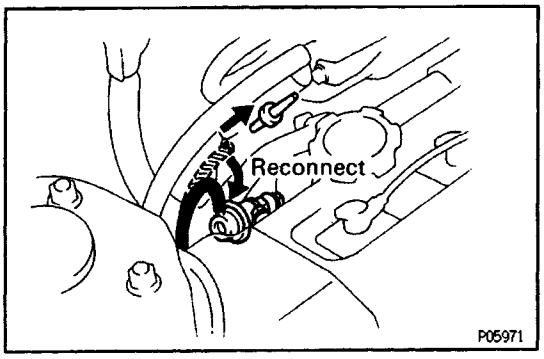

(n) Reconnect the vacuum sensing hose to the air intake chamber.

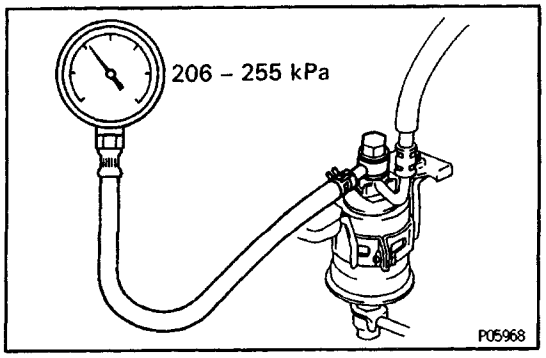

(o) Measure the fuel pressure at idling.
Fuel pressure:
206 – 255 kPa (2.1 – 2.6 kgf/cm^2, 31 – 37 psi)
If pressure is not as specified, check the vacuum sensing hose and fuel pressure regulator.

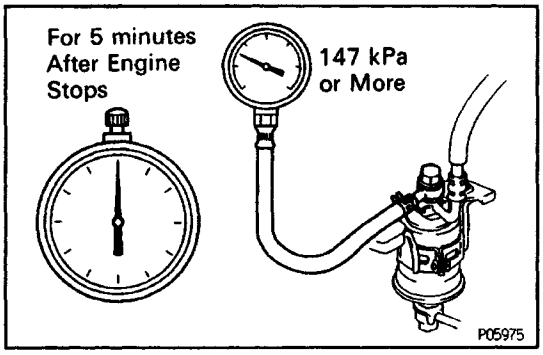

(P) Stop the engine.
(q) Check that the fuel pressure remains as specified for 5 minutes after the engine stops.

Fuel pressure:

147 kPa (1.5 kgf/cm^2, 21 psi) or more

If pressure is not as specified, check the fuel pump, pressure regulator and/or injector.

(r) After checking fuel pressure, disconnect the battery negative (–) cable and carefully remove the SST to prevent gasoline from splashing.
SST 09268–45012

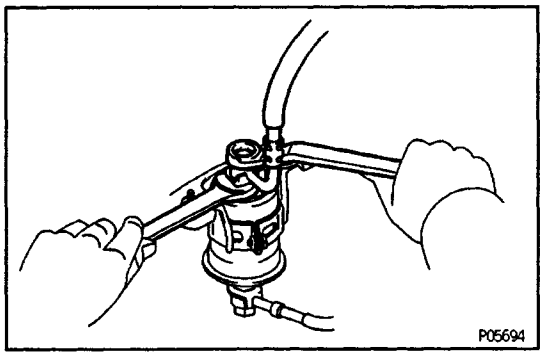

(s) Connect the fuel inlet hose to the fuel filter with with two new gaskets and the union bolt.

Torque: 29 N–m (300 kgf–cm, 22 ft–lbf)

(t) Reconnect the cable to the negative (–) terminal of the battery.
(u) Check for fuel leaks.

EG13F–01

COMPONENTS FOR REMOVAL AND INSTALLATION

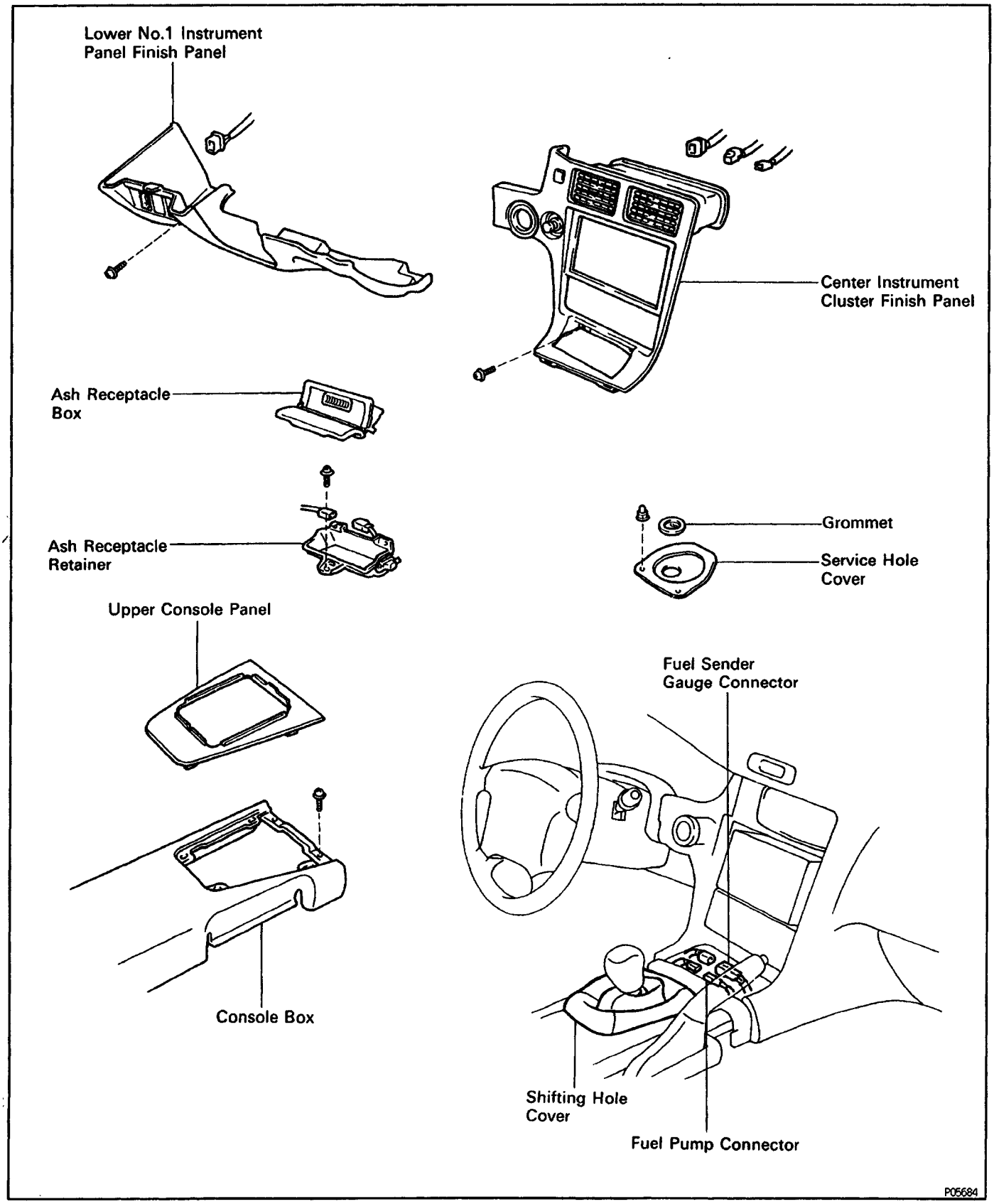

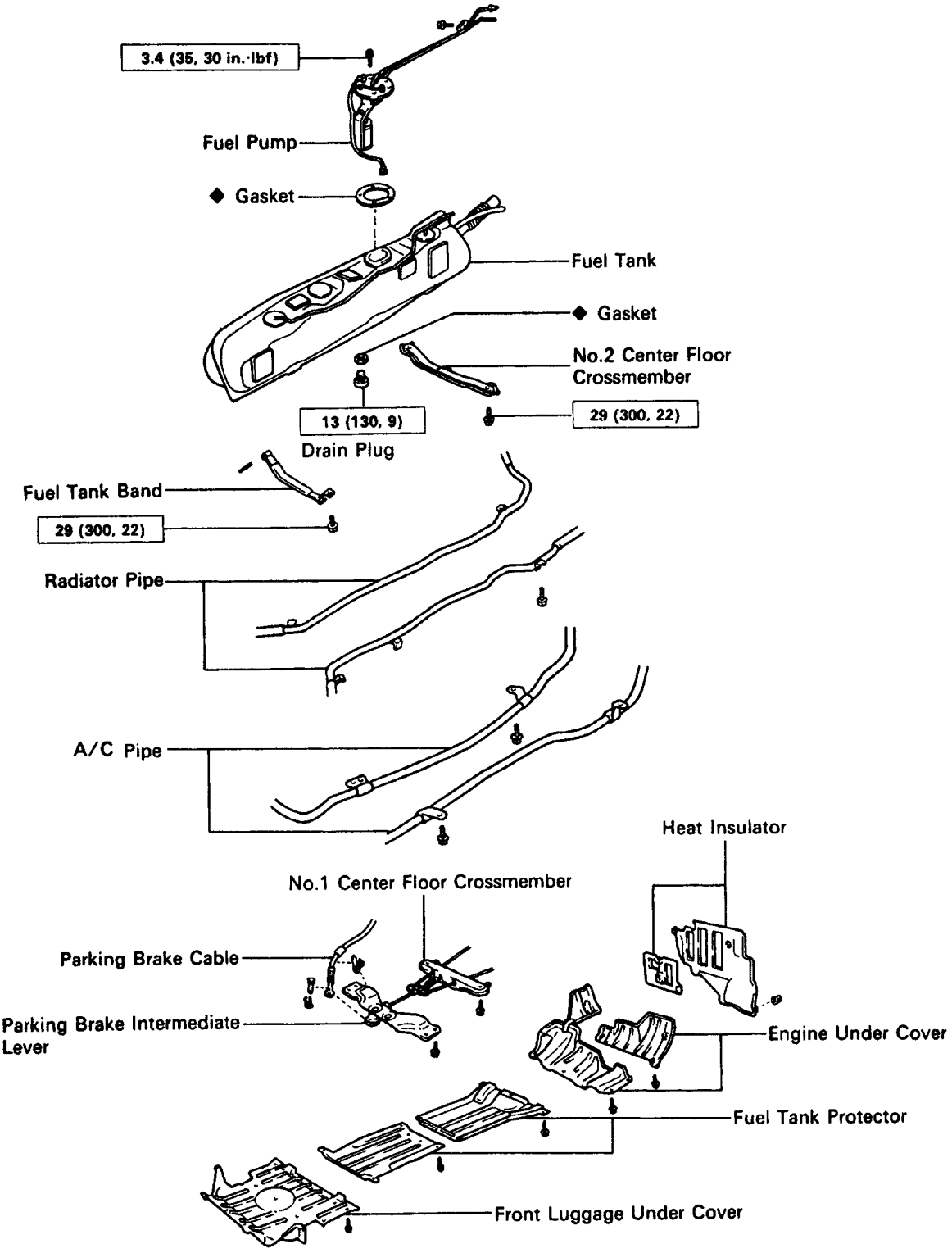

N·m (kgf·cm, ft·lbf) : Specified Torque
◆ Non-reusable part

FI5801

EG12H–01

FUEL PUMP INSPECTION

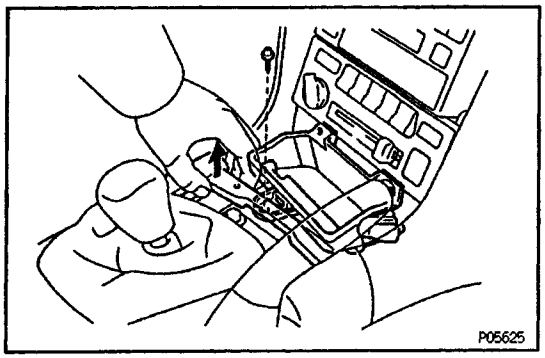

(See Components for Removal and Installation)

1. REMOVE ASH RECEPTACLE RETAINER

(See steps 1 and 2 in Fuel Pump Removal)

2. DISCONNECT FUEL PUMP CONNECTOR

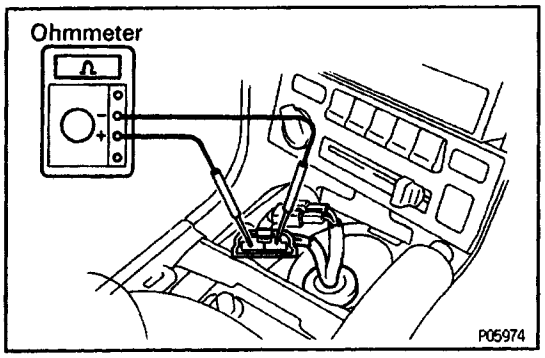

3. INSPECT FUEL PUMP

A. Inspect fuel pump resistance

Using an ohmmeter, measure the resistance between the terminals.

Resistance (Cold):

0.2–3.0Ω

If the resistance is not as specified, replace the fuel pump.

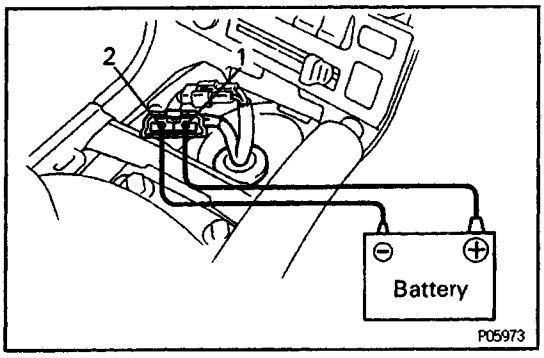

B. Inspect fuel pump operation

Connect the positive (+) lead from the battery to terminal 1 of the connector, and the negative (–) lead to terminal

2. Check that the fuel pump operates.

If operation is not as specified, replace the fuel pump.

NOTICE:

- **These tests must be performed quickly (within 10 seconds) to prevent the coil from burning out.**
- **Keep the fuel pump as far away from the battery as possible.**
- **Always perform switching at the battery side.**

4. RECONNECT FUEL PUMP CONNECTOR

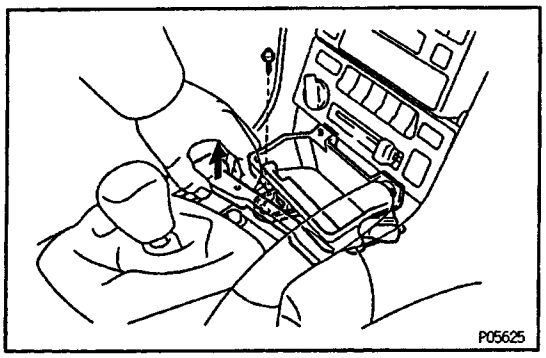

5. REINSTALL ASH RECEPTACLE RETAINER

(See steps 7 and 9 in Fuel Pump Installation)

EG12J–01

FUEL PUMP REMOVAL

(See Components for Removal and Installation)

CAUTION: Do not smoke or work near an open flame when working on the fuel pump.

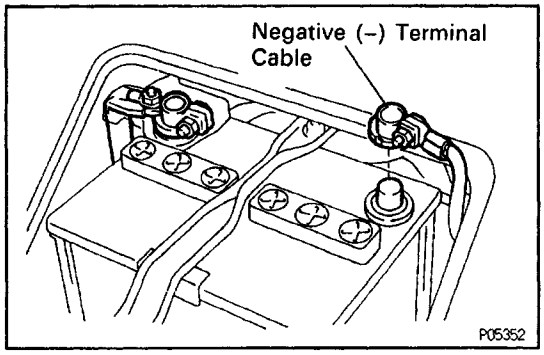

1. DISCONNECT CABLE FROM NEGATIVE TERMINAL OF BATTERY

CAUTION: Turn the ignition switch to "LOCK". Disconnect the negative terminal from the battery. Wait at least 20 seconds before proceeding with work.

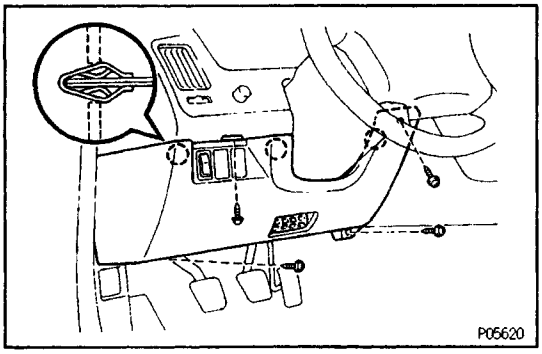

2. DISCONNECT FUEL PUMP CONNECTOR AND FUEL SENDER GAUGE CONNECTOR

(a) Remove the tour screws, and disconnect the lower No.1 instrument panel finish panel by pulling it.

(b) Disconnect the connector, and remove the lower No. 1 instrument panel finish panel.

(c) Remove the ash receptacle box.

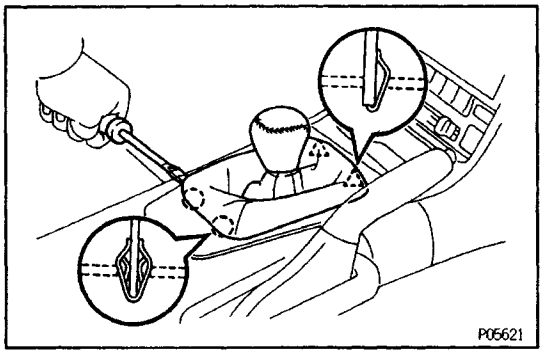

(d) Using a screwdriver, pry out the shifting hole cover.

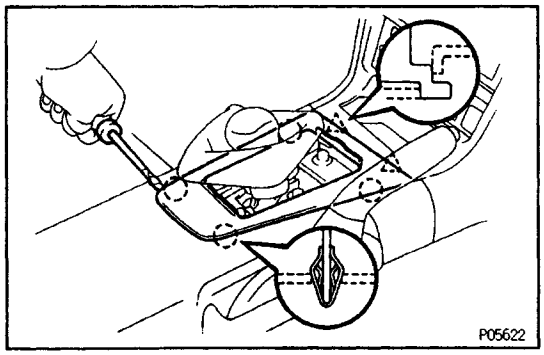

(e) Using a screwdriver, pry out the upper console panel.

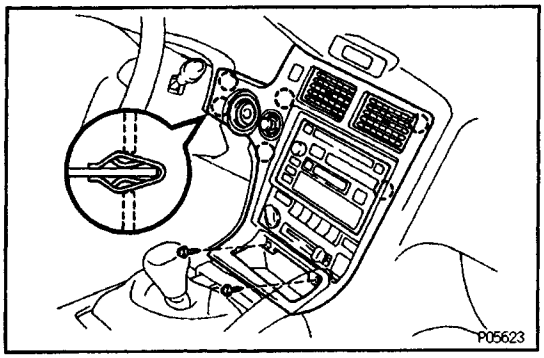

(f) Remove the two screws, and disconnect the center instrument cluster finish panel by pulling it.
(g) Disconnect the connectors, and remove the center instrument cluster finish panel.

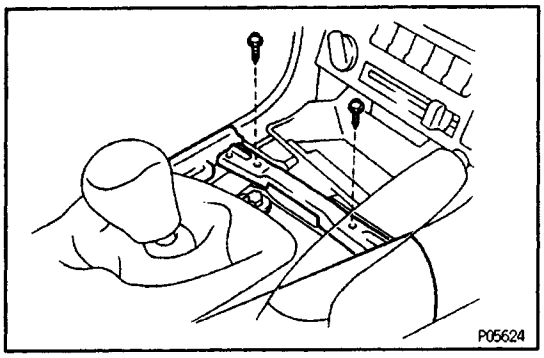

(h) Remove the two screws holding the console box to the instrument panel safety pad.

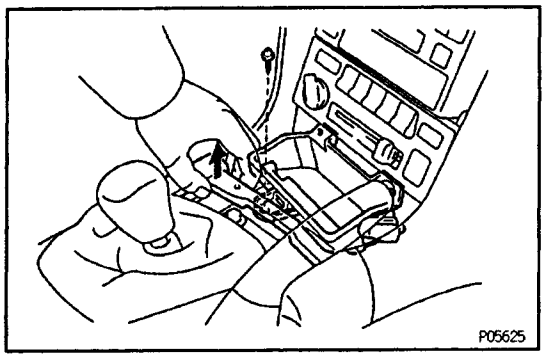

(i) Remove the ash receptacle retainer mounting screw by lifting the front side of the console box.
(j) Disconnect the connector, and remove the ash re–ceptacle retainer.

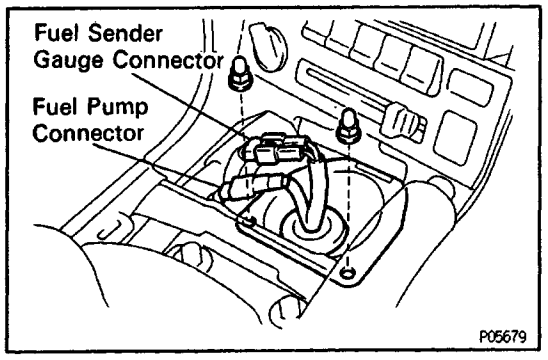

(k) Disconnect the fuel pump connector and fuel sander gauge connector.
(l) Remove the grommet from the service hole cover.
(m) Remove the two nuts and service hole cover.

3. REMOVE ENGINE UNDER COVERS
4. REMOVE FRONT LUGGAGE UNDER COVER
5. REMOVE FUEL TANK PROTECTORS
6. DRAIN FUEL

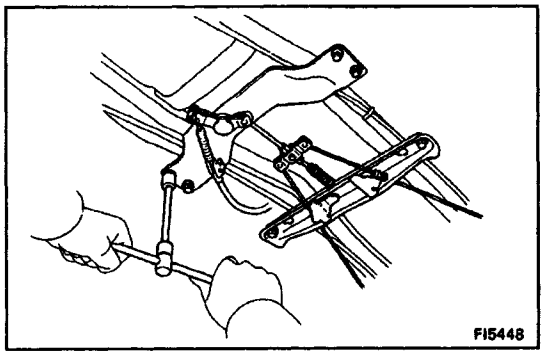

7. REMOVE PARKING BRAKE INTERMEDIATE LEVER AND NO.1 CENTER FLOOR CROSSMEMBER

(a) Remove the four bolts and intermediate lever.
(b) Remove the two bolts and crossmember.
(c) Disconnect the parking brake cable from the intermediate lever.

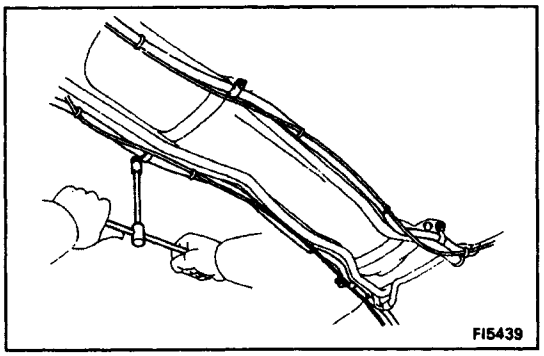

8. REMOVE A/C PIPES FROM BODY

Remove the four bolts, and disconnect the two A/C pipe from the body.

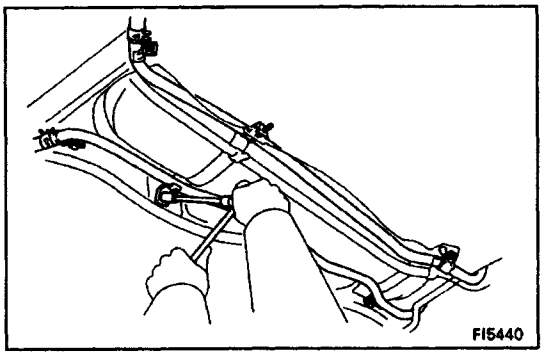

9. DISCONNECT RADIATOR PIPES FROM BODY

Remove the six bolts, and disconnect the two radiator pipe from the body.

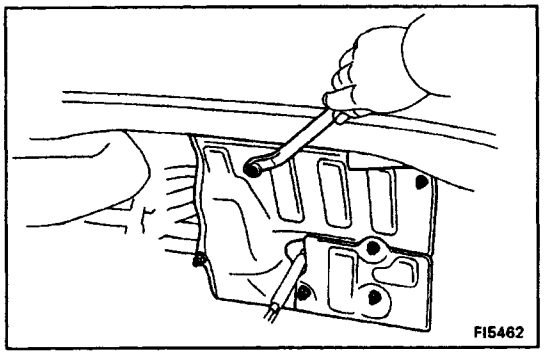

10. REMOVE FUEL TANK HEAT INSULATORS

Remove the six nuts and two heat insulator.

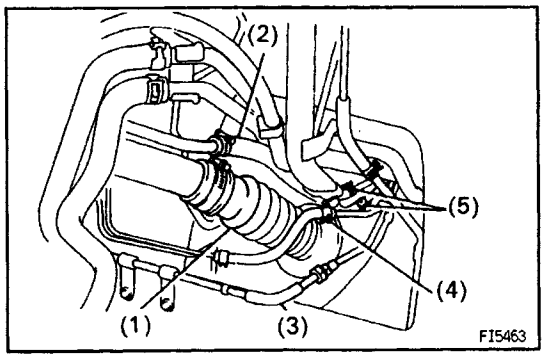

11. DISCONNECT HOSES AND TUBE

CAUTION: Remove the fuel filter cap to prevent the fuel from flowing out.

Disconnect the following hoses and tube:

(1) Fuel inlet hose
(2) Fuel breather hose
(3) Fuel pump hose
(4) Fuel return hose
(5) Two fuel evaporative bent hose

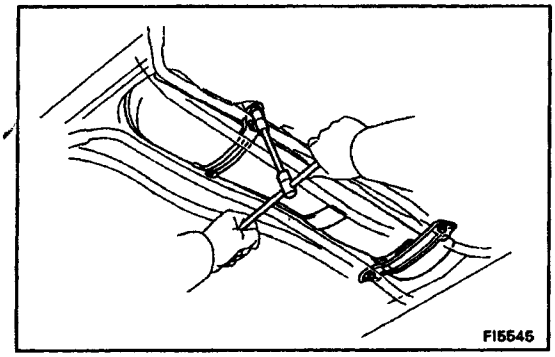

12. REMOVE FUEL TANK

(a) Remove the bolt, pin and tank band.
(b) Remove the two bolts and No.2 center floor cross–member.
(c) Remove the fuel tank.

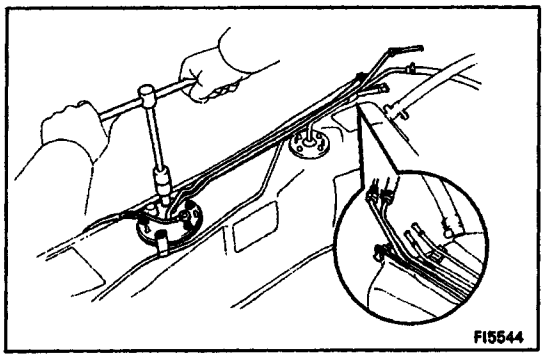

13. REMOVE FUEL PUMP ASSEMBLY FROM FUEL TANK

(a) Remove the bolt holding the fuel pump tube to the fuel tank.
(b) Remove the five bolts, and pull out the fuel pump assembly.
(c) Remove the gasket from the pump bracket.

COMPONENTS FOR DISASSEMBLY AND ASSEMBLY

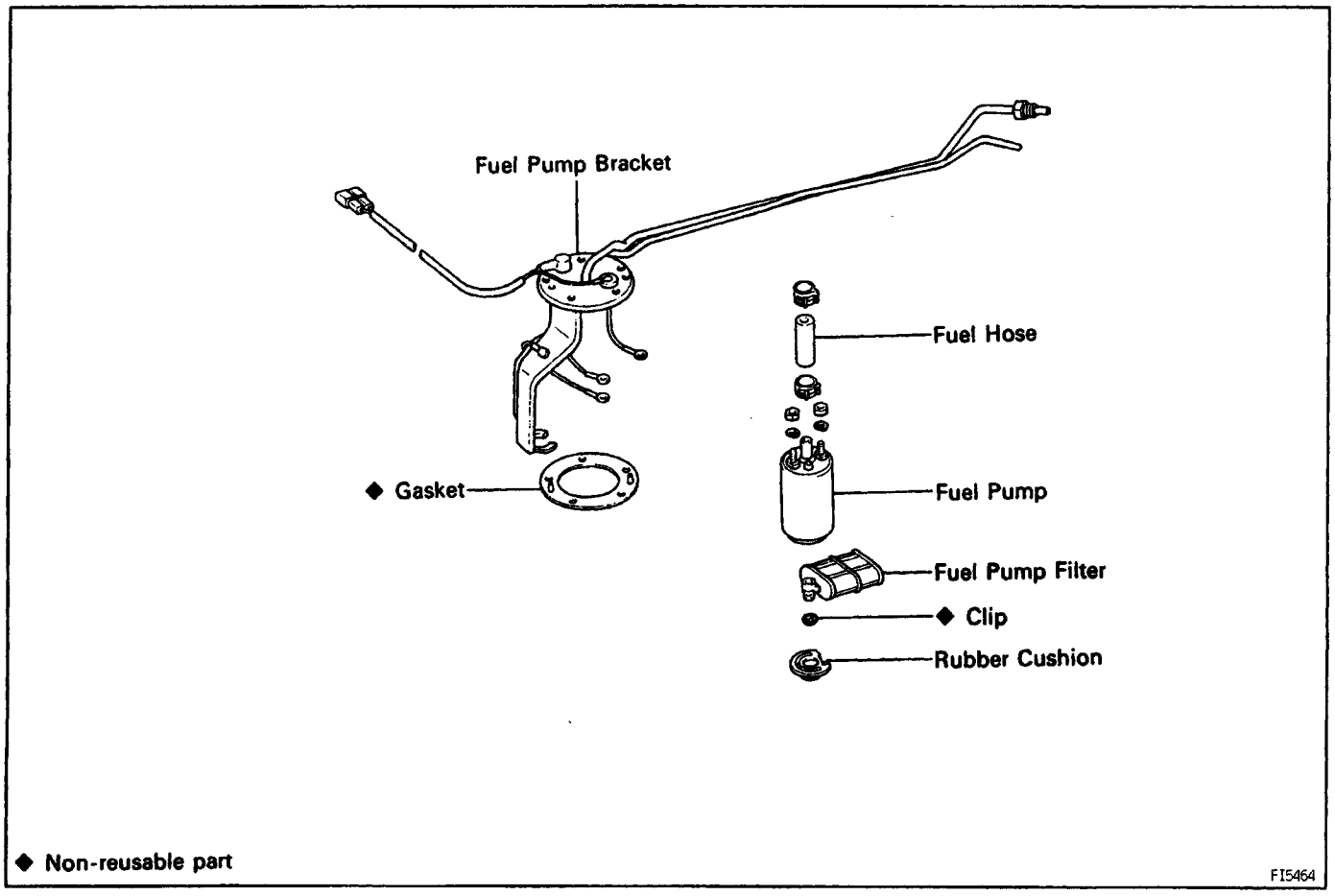

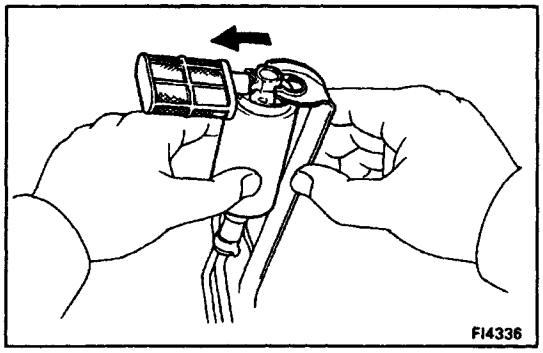

EG12K–01

FUEL PUMP DISASSEMBLY

(See Components for Disassembly and Assembly)

1. REMOVE FUEL PUMP FROM FUEL PUMP BRACKET

(a) Pull out the lower side of the fuel pump from the pump bracket.
(b) Remove the rubber cushion from the fuel pump.
(c) Remove the nut and spring washer, and disconnect the lead wire from the fuel pump. Disconnect the three lead wires.
(d) Disconnect the fuel hose from the fuel pump, and remove the fuel pump.

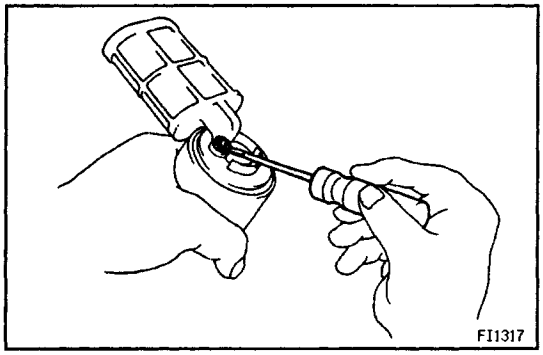

2. REMOVE FUEL PUMP FILTER FROM FUEL PUMP

(a) Using a small screwdriver, pry out the clip.
(b) Pull out the pump filter.

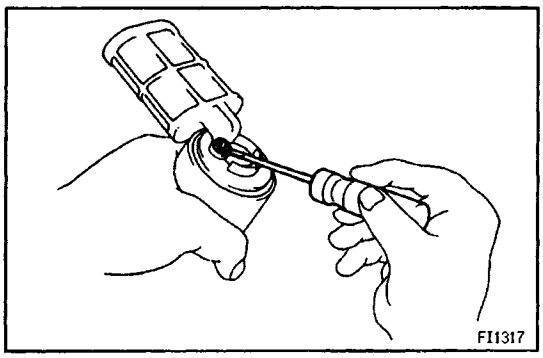

FUEL PUMP ASSEMBLY

(See Components for Disassembly and Assembly)

1. INSTALL FUEL PUMP FILTER TO FUEL PUMP

Install the pump filter with a new clip.

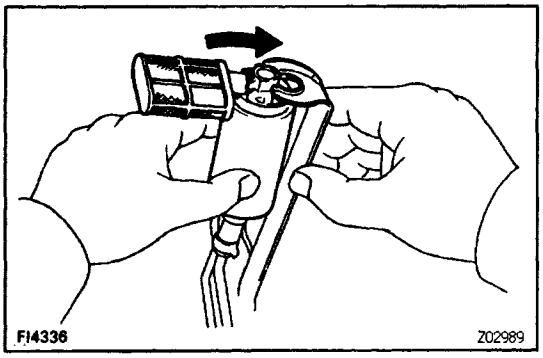

2. INSTALL FUEL PUMP TO FUEL PUMP BRACKET

(a) Connect the fuel hose to the outlet port of the fuel pump.
(b) Connect the lead wire to the fuel pump with the spring washer and nut. Connect the three lead wires.
(c) Install the rubber cushion to the fuel pump.
(d) Install the fuel pump by pushing the lower side of the fuel pump.

EG12M–01

FUEL PUMP INSTALLATION

(See Components for Removal and Installation)

1. INSTALL FUEL PUMP ASSEMBLY TO FUEL TANK

(a) Install a new gasket to the pump bracket.

(b) Insert the fuel pump assembly into the fuel tank.

(c) Install the five bolts holding the fuel pump bracket to the fuel tank.

Torque: 3.4 N–m (35 kgf–cm, 30 in.–lbf)

(d) Install the five bolts holding the fuel pump tube to the fuel tank.

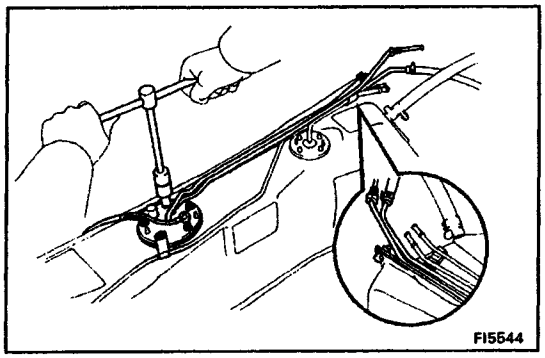

2. INSTALL FUEL TANK

(a) Apply soapy water–to the cushions on the fuel tank.

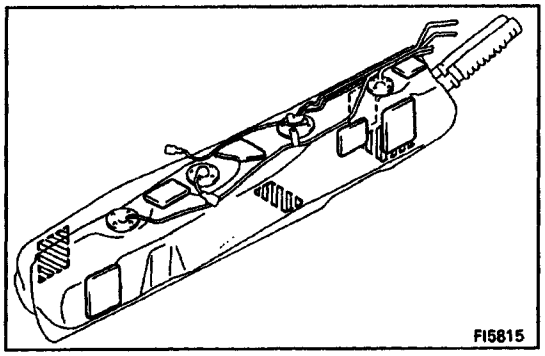

(b) Attach the fuel tank to the body.

(c) Install the fuel tank band with the pin and bolt.

Torque: 29 N–m (300 kgf–cm, 22 ft–lbf)

(d) Install the No.2 center floor crossmember with the two bolts.

Torque: 29 N–m (300 kgf–cm, 22 ft–lbf)

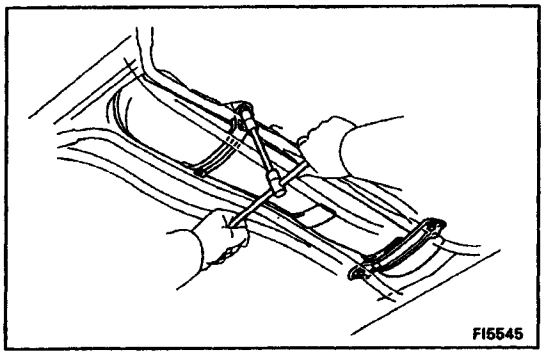

3. CONNECT HOSES AND TUBE

Connect the following hoses and tube:

(1) Fuel inlet hose

(2) Fuel breather hose

(3) Fuel pump hose

(4) Fuel return hose

(5) Two fuel evaporative bent hose

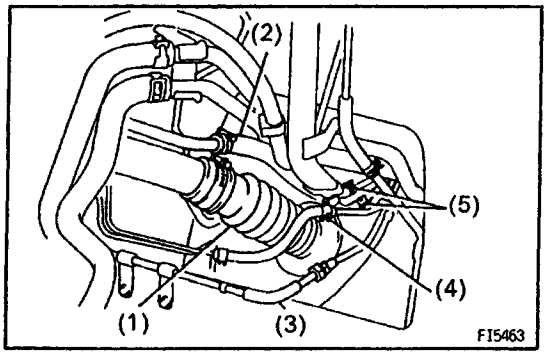

4. INSTALL RADIATOR PIPES TO BODY

Install the two radiator pipes with the six bolts.

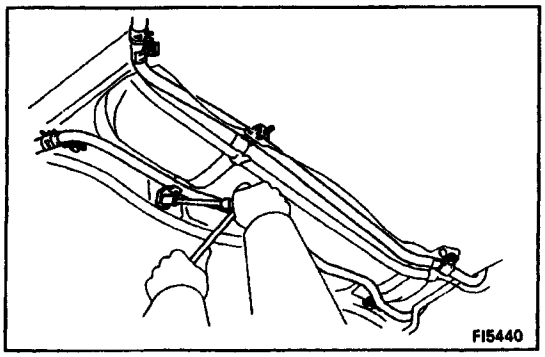

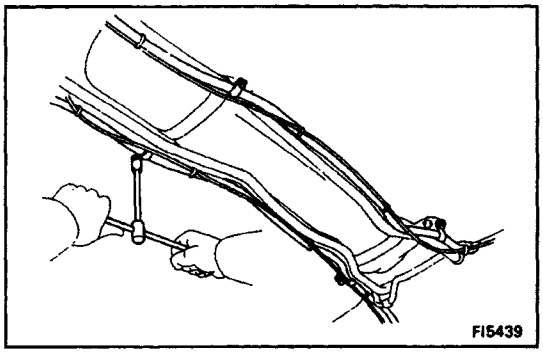

5. INSTALL A/C PIPES TO BODY

Install the two A/C pipes with the four bolts

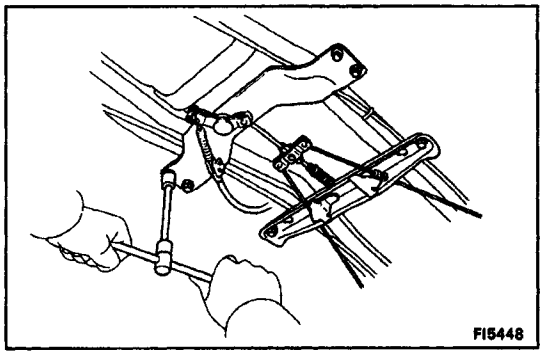

6. INSTALL PARKING BRAKE INTERMEDIATE LEVER AND NO.1 CENTER FLOOR CROSSMEMBER

(a) Connect the parking brake cable to the intermediate lever.
(b) Install the intermediate lever with the four bolt.
(c) Install the crossmember with the two bolts.

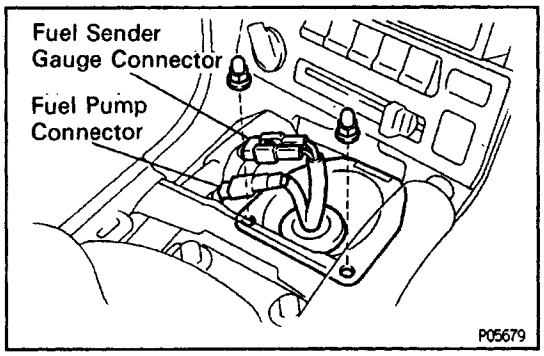

7. CONNECT FUEL PUMP CONNECTOR AND FUEL SENDER GAUGE CONNECTOR

(a) Install the service hole cover with the two nuts.
(b) Connect the fuel pump connector and fuel sender gauge connector.
(c) Install the grommet to the service hole cover.

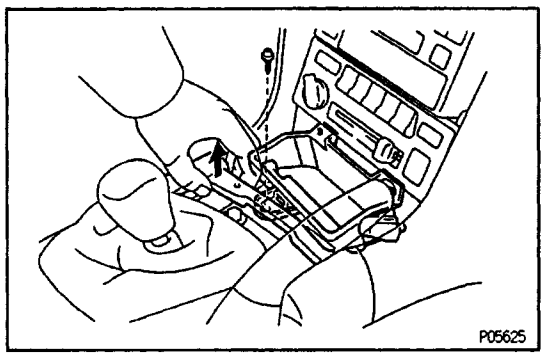

(d) Connect the connector, and install the ash receptacle retainer with the screw by lifting the front side of the console box.

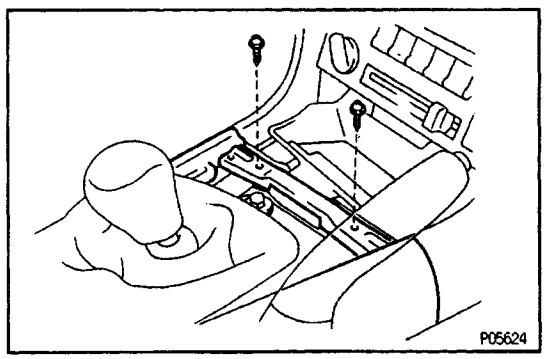

(e) Install the console box to the instrument panel safety pad with the two screws

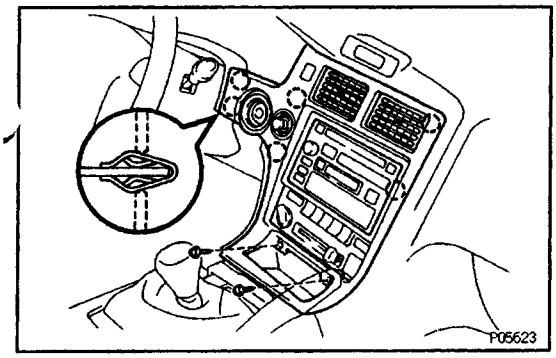

(f) Connect the connectors, and attach the center instrument cluster finish panel to the instrument panel safety pad with the clips.
(g) Install the two screws.

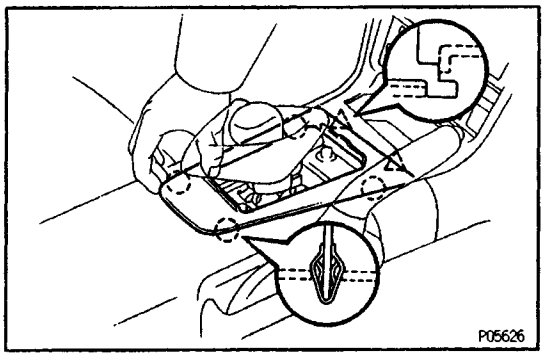

(h) Connect the connector, and attach the upper console panel to the console panel with the two claws and two clips.

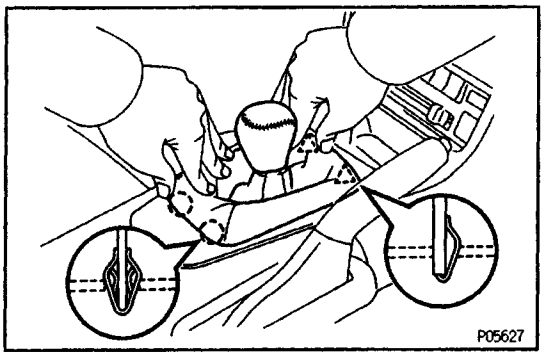

(i) Attach the shifting hole cover with the four clips.
(j) Install the ash receptacle box.

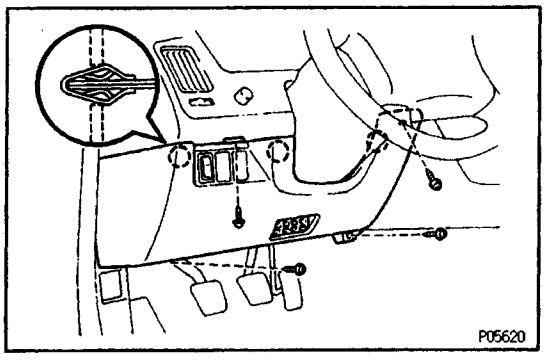

(k) Connect the connector, and attach the lower No.1 instrument panel finish panel with the three clips.
(l) Install the four screws.

8. FILL WITH FUEL
9. CONNECT CABLE TO NEGATIVE TERMINAL OF BATTERY
10. CHECK FOR FUEL LEAKS

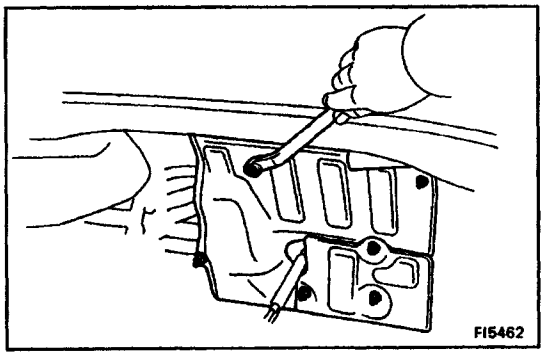

11. INSTALL FUEL TANK HEAT INSULATORS

Install the two heat insulators with the six nuts.

12. INSTALL FUEL TANK PROTECTORS

13. INSTALL FRONT LUGGAGE UNDER COVER

14. INSTALL ENGINE UNDER COVERS

FUEL TANK AND LINE

EG0DC–03

COMPONENTS

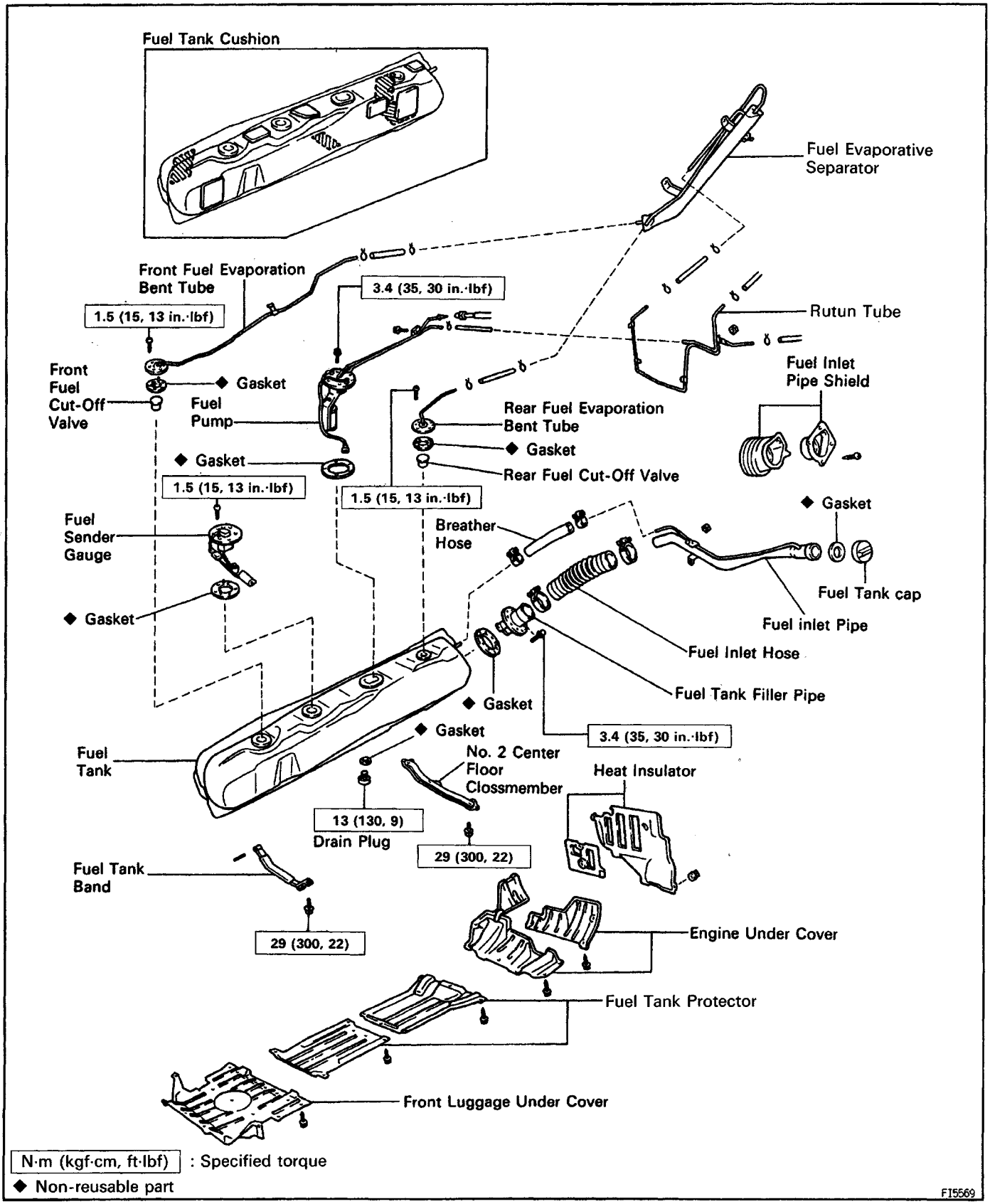

EG0DD–01

PRECAUTIONS

1. Always use new gaskets when replacing the fuel tank or component parts.

2. Apply the proper torque to all parts tightened.

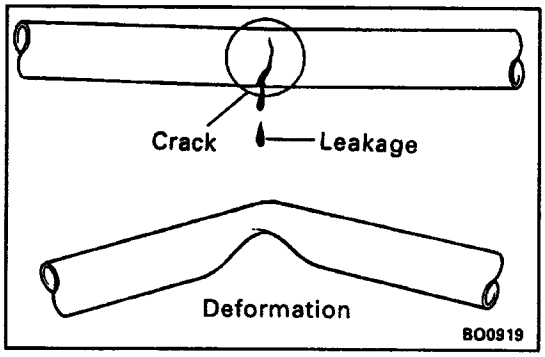

EG0DE–01

FUEL LINES AND CONNECTIONS INSPECTION

(a) Check the fuel lines for cracks or leakage, and all connections for deformation.

(b) Check the fuel tank vapor vent system hoses and connections for looseness, sharp bends or damage.

(c) Check the fuel tank for deformation, cracks fuel lea–kage or tank band looseness.

(d) Check the filler neck for damage or fuel leakage.

(e) Hose and tube connections are as shown in the il–lustration.

If a problem is found, repair or replace the part as necessary.

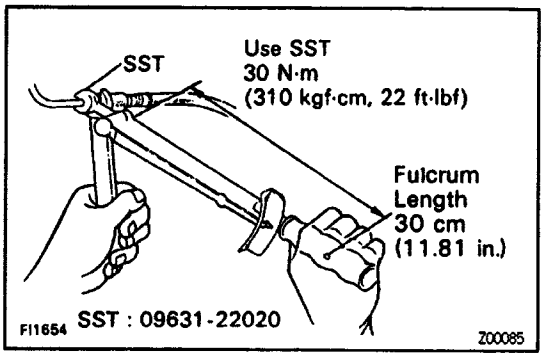

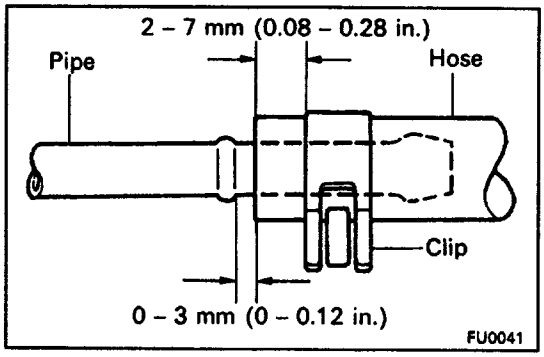

IDLE AIR CONTROL VALVE (IACV)

EG0DK–03

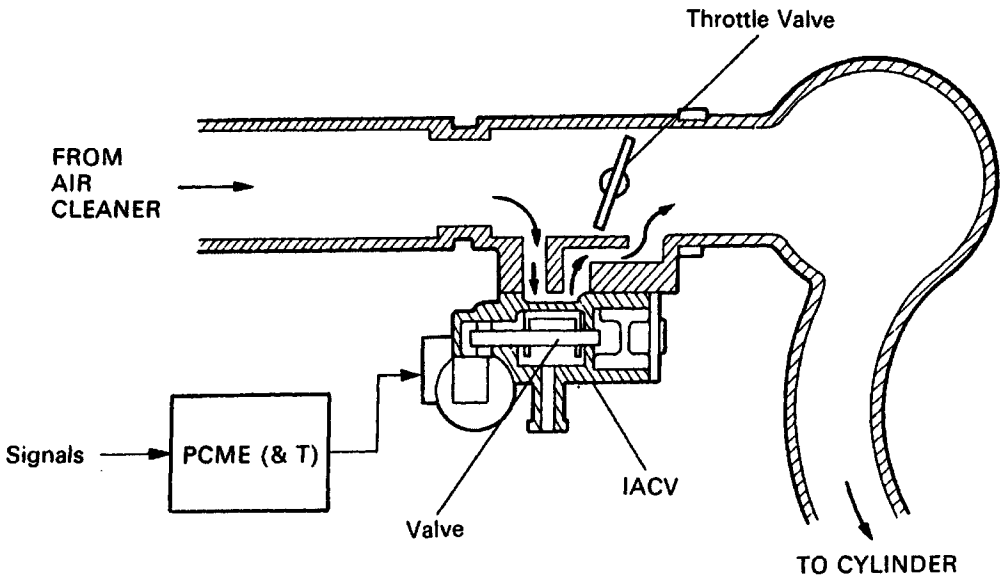

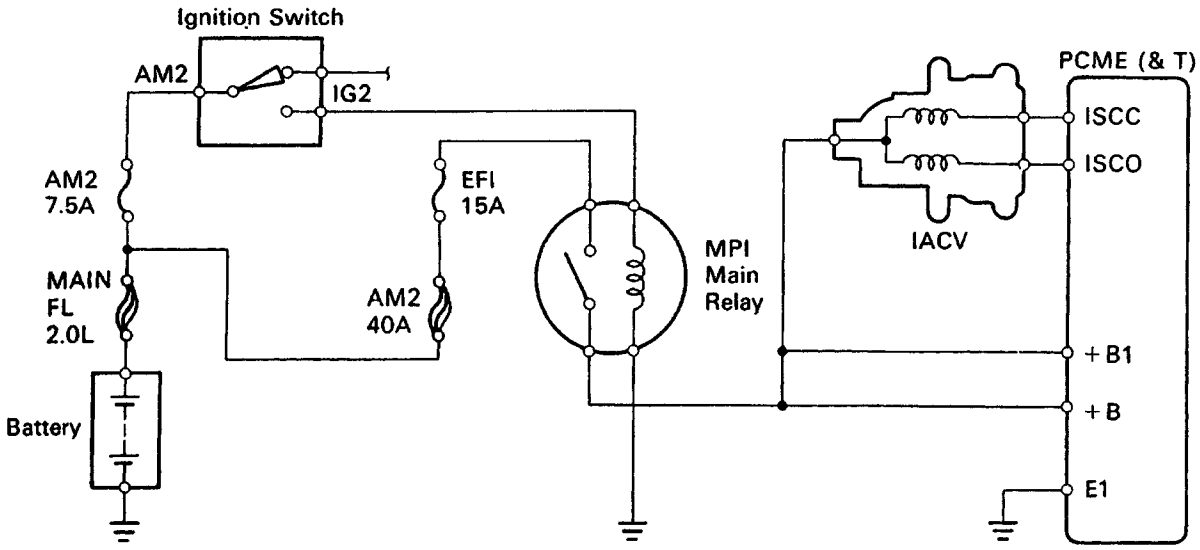

P05908
FI5741

Z02939

EG0DL–03

ON–VEHICLE INSPECTION

1. INSPECT IACV OPERATION

(a) Initial conditions:

- Engine at normal operating temperature
- Idle speed set correctly
- Transmission in neutral position

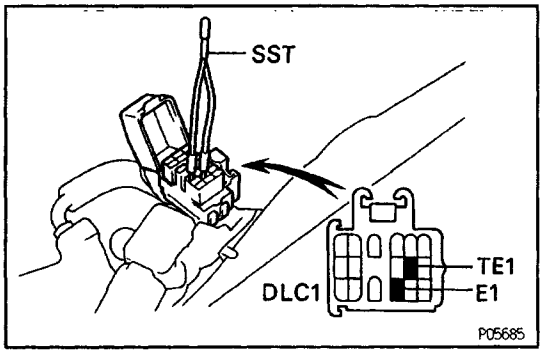

(b) Using SST, connect terminals TE1 and E1 of the data link connector 1.
SST 09843–18020

(c) After engine rpm are kept at 900 – 1,300 rpm for 5 seconds, check that they return to idle speed.
If the rpm operation is not as specified, check the IACV, wiring and PCME (& T).

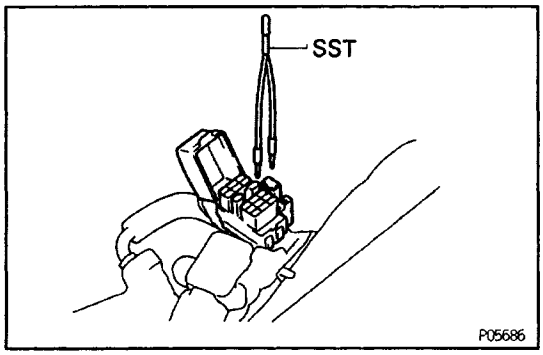

(d) Remove the SST form the data link connector 1.
SST 09843–18020

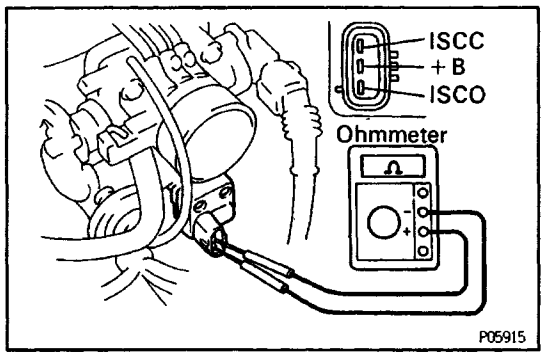

2. INSPECT IACV RESISTANCE

(a) Disconnect the IACV connector.

(b) Using an ohmmeter, measure the resistance between terminal +B and other terminals (ISCC, ISCO).
Resistance:
19.3–22–30

If resistance is not as specified, replace the IACV.

(c) Reconnect the IACV connector.

EG13R–01

COMPONENTS FOR REMOVAL AND INSTALLATION

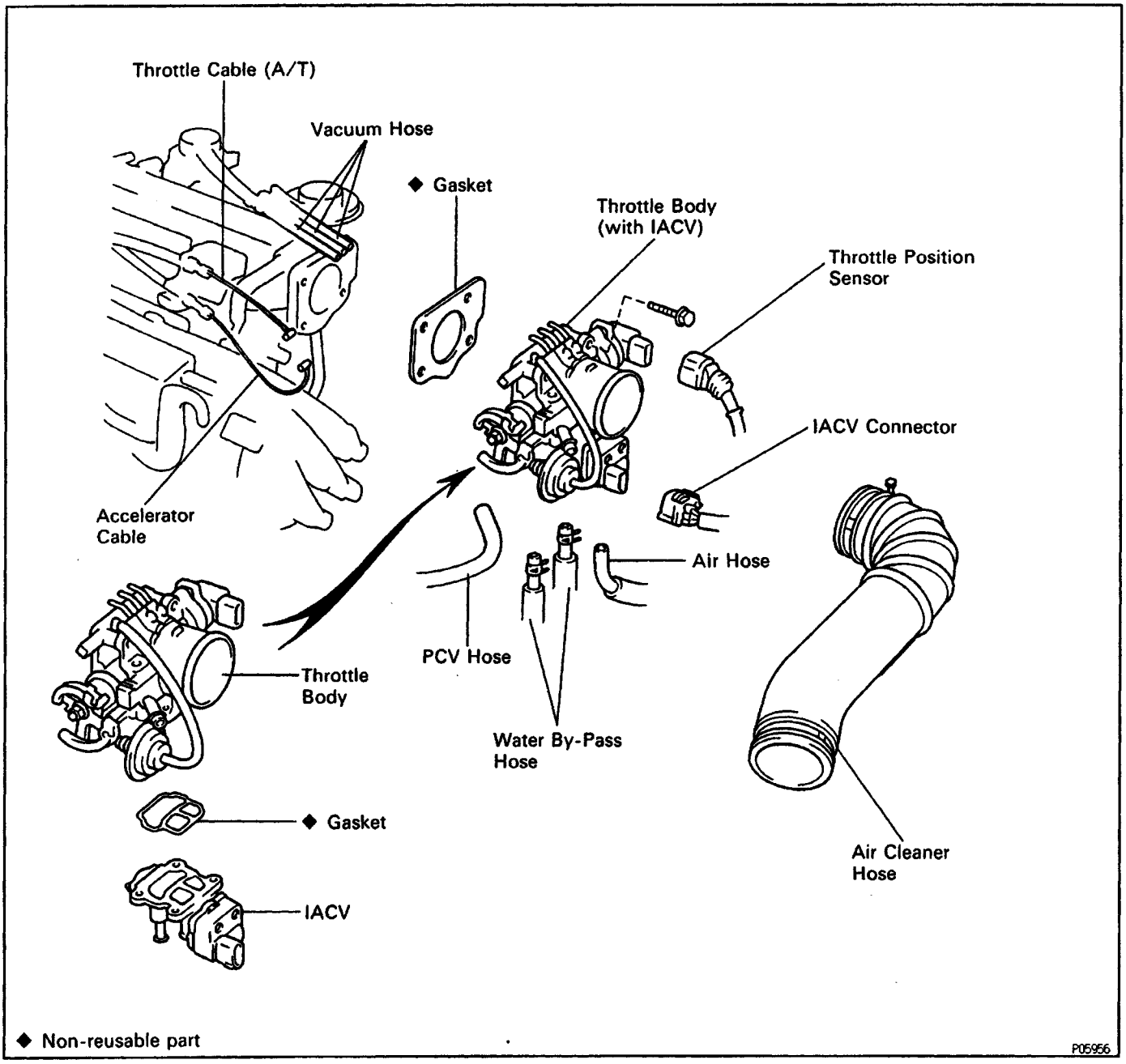

EG13S–01

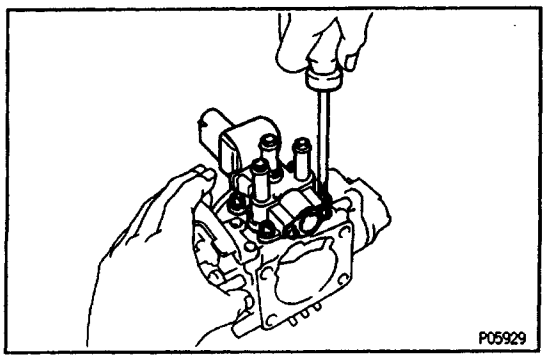

IACV REMOVAL

(See Components for Removal and Installation)

1. REMOVE THROTTLE BODY

(See Throttle Body Removal)

2. REMOVE IACV

Remove the four screws, IACV and gasket.

EGODN–03

IACV INSPECTION

INSPECT IACV OPERATION

(a) Connect the position (+) lead from the battery to terminal +B and negative (–) lead to terminal ISCC, and check that the valve is closed.

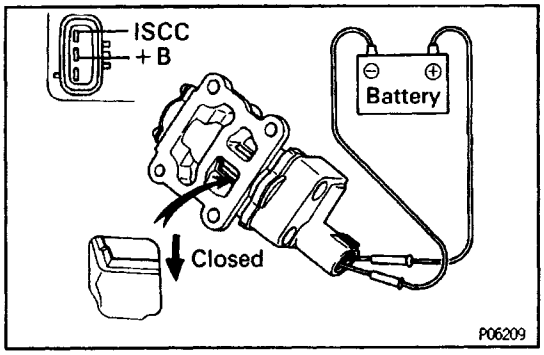

(b) Connect the positive (+) lead from the battery to terminal +B and negative (–) lead to terminal ISCO, and check that the valve is open.
If operation is not as specified, replace the IACV.

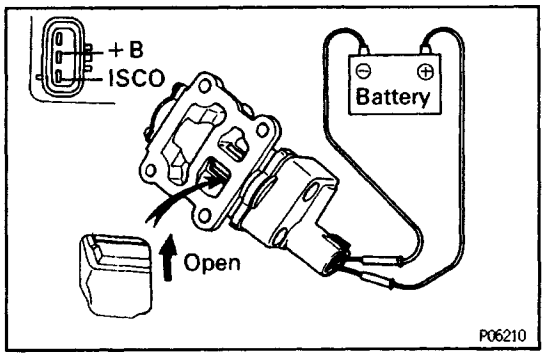

EGODP–03

IACV INSTALLATION

(See Components for Removal and Installation)

1. INSTALL IACV

(a) Place a new gasket on the throttle body.

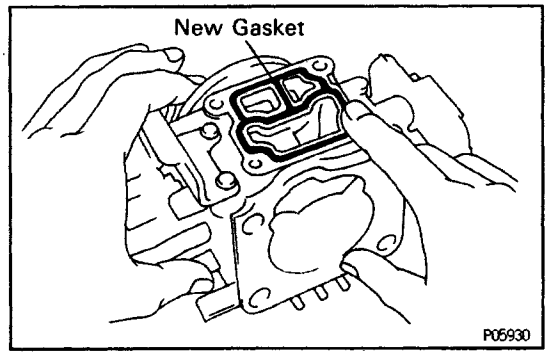

(b) Install the IACV with the four screws.

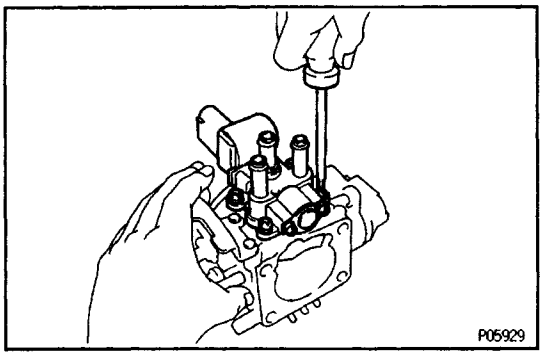

2. INSTALL THROTTLE BODY

(See Throttle Body Installation)

IGNITION MAIN RELAY

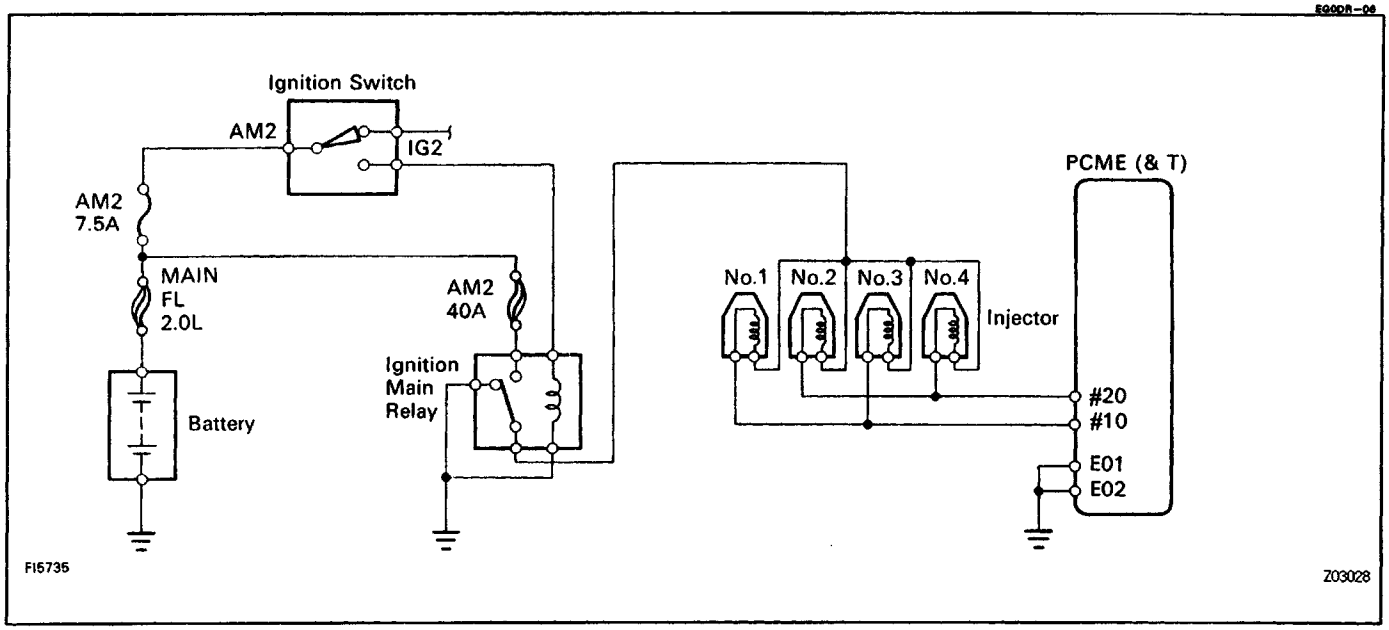

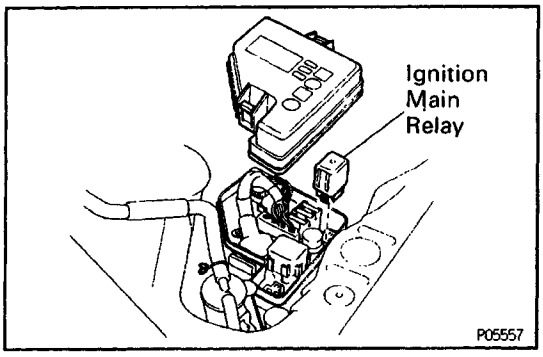

IGNITION MAIN RELAY ("IGN") INSPECTION

1. REMOVE IGNITION MAIN RELAY

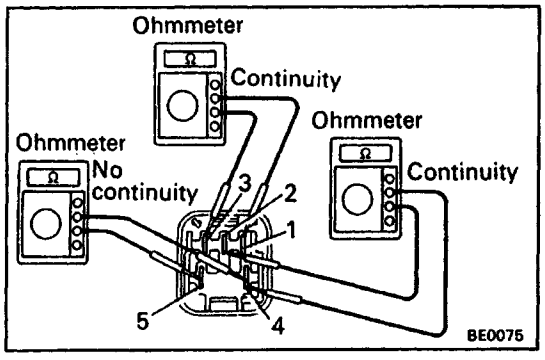

2. INSPECT IGNITION MAIN RELAY

A. Inspect relay continuity

(a) Using an ohmmeter, check that there is continuity between terminals 1 and 3.

(b) Check that there is continuity between terminals 2 and 4.

(c) Check that there is no continuity between terminals 4 and 5.

If continuity is not as specified, replace the relay.

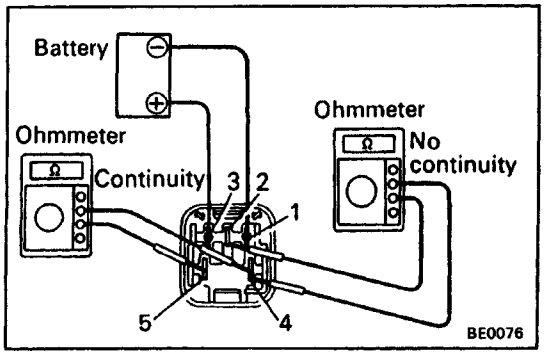

B. Inspect relay operation

(a) Apply battery voltage across terminals 1 and 3.

(b) Using an ohmmeter, check that there is continuity between the 2 and 4.

(c) Check that there is continuity between terminals 4 and 5.

If operation is not as specified, replace the relay.

3. REINSTALL IGNITION MAIN RELAY

INJECTOR

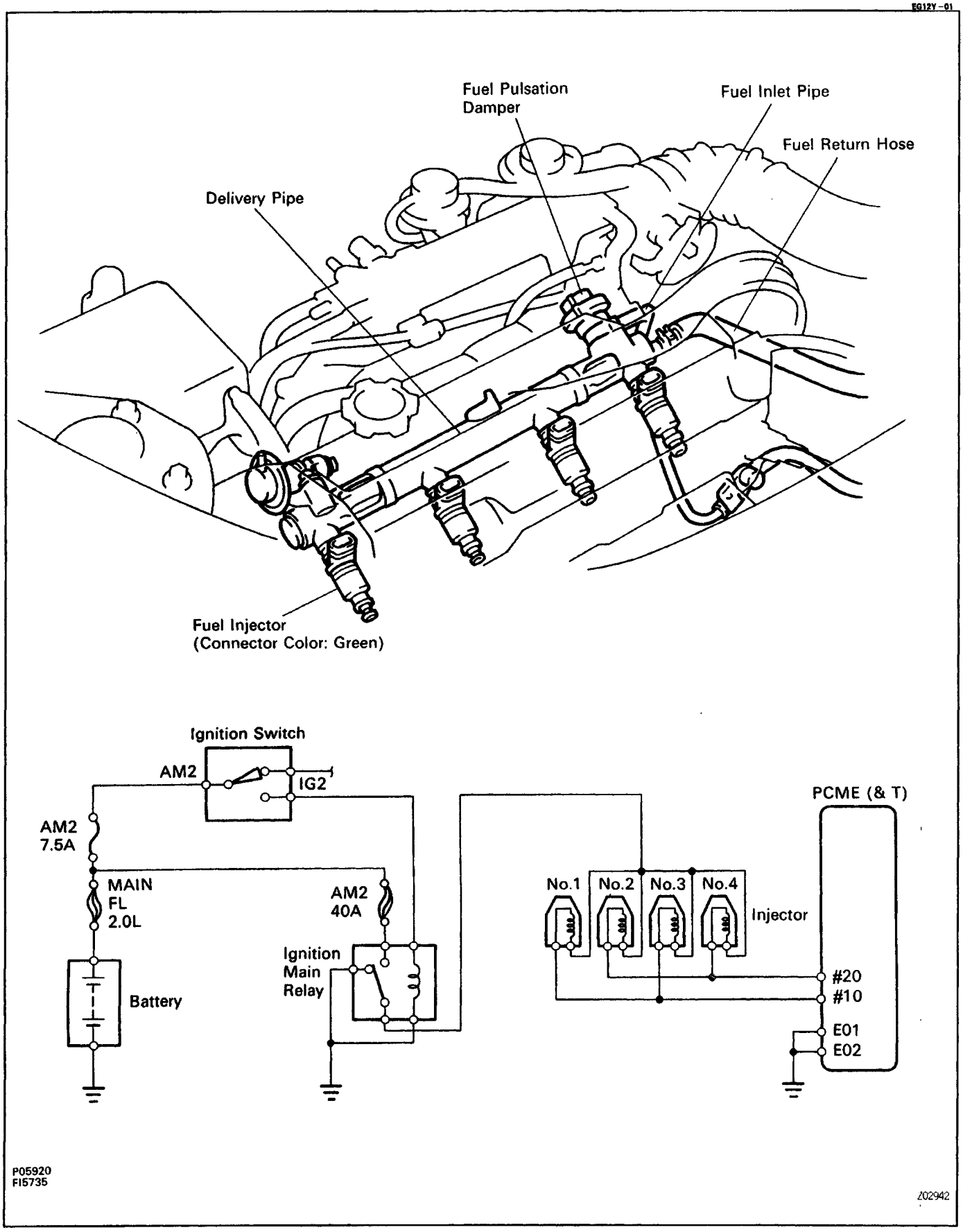
EG12Y – 01
Fuel Pulsation Damper
Fuel Inlet Pipe
Fuel Return Hose
Delivery Pipe
Fuel Injector
(Connector Color: Green)
Ignition Switch
AM2
IG2
AM2
7.5A
MAIN
FL
2.0L
AM2
40A
Ignition
Main
Relay
Battery
PCME (& T)
No.1
No.2
No.3
No.4
Injector
#20
#10
E01
E02
P05920
FI5735
Z02942

EG0D6–02

ON–VEHICLE INSPECTION

1. INSPECT INJECTOR OPERATION

Check operation sound from each injector.

(a) With the engine running or cranking, use a sound scope to check that there is normal operating noise in proportion to engine rpm.

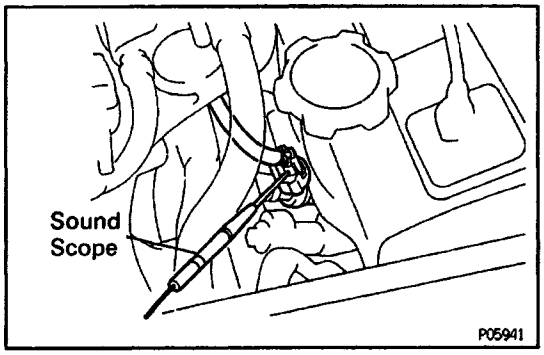

(b) If you have no sound scope, you can check the injector transmission operation with your finger.
If no sound or unusual sound is heard, check the wiring connector, injector or injection signal from the PCME (& T).

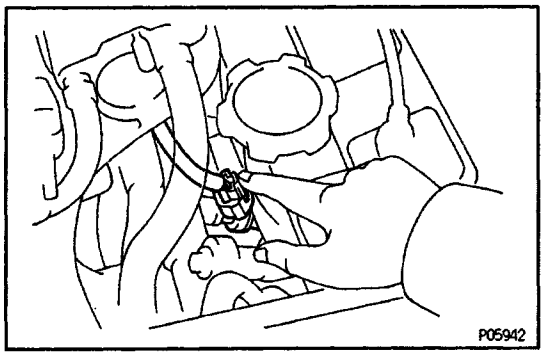

2. INSPECT INJECTOR RESISTANCE

(a) Disconnect the injector connector.

(b) Using an ohmmeter, measure the resistance between the terminals.

Resistance:

Approx. 13.8Ω

If the resistance is not as specified, replace the injector.

(c) Reconnect the injector connector.

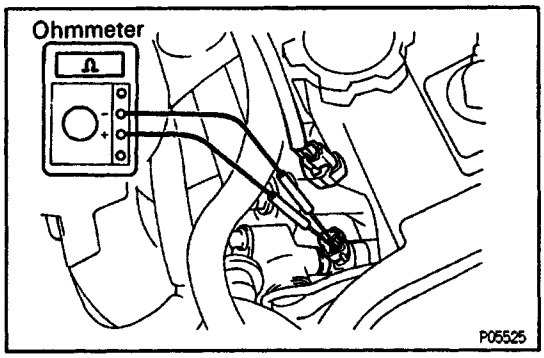

EG130–01

COMPONENTS FOR REMOVAL AND INSTALLATION

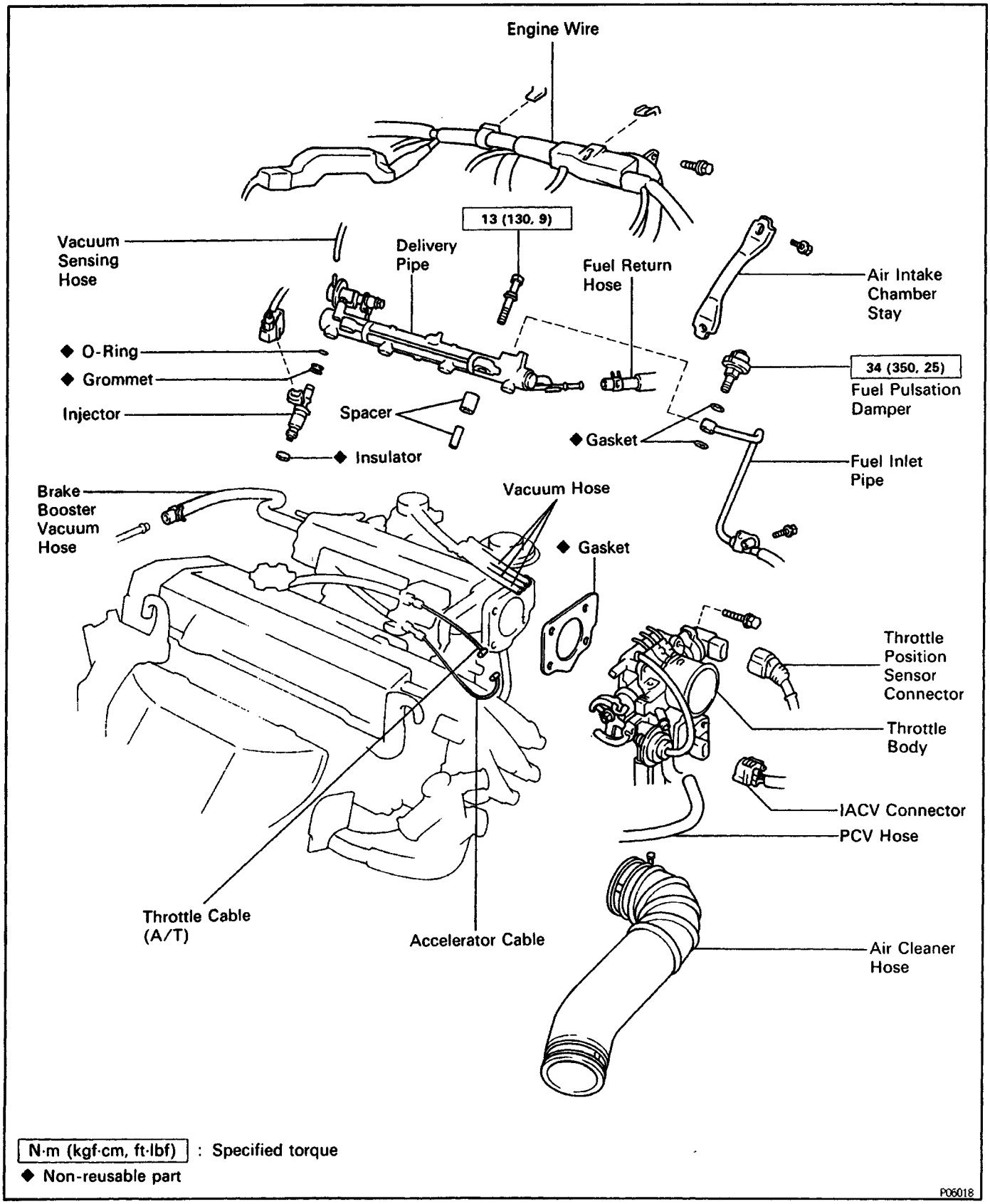

EG191–01

INJECTORS REMOVAL

(See Components for Removal and Installation)

1. DISCONNECT CABLE FROM NEGATIVE TERMINAL OF BATTERY

CAUTION: Turn the ignition switch to ”LOCK”. Disconnect the negative terminal from the battery. Wait at least 20 seconds before proceeding with work.

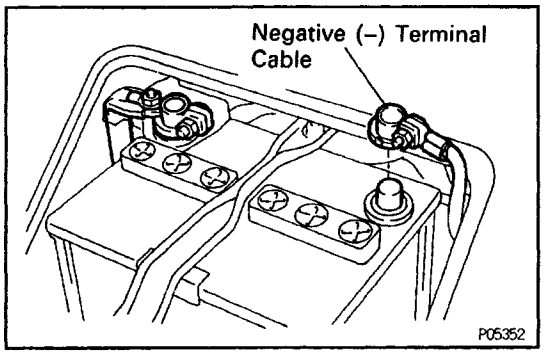

2. REMOVE RH ENGINE HOOD SIDE PANEL

3. REMOVE AIR CLEANER HOSE

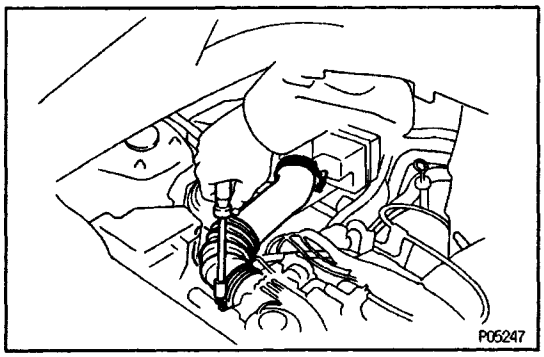

4. DISCONNECT ACCELERATOR CABLE FROM THROTTLE BODY

5. (A/T)

DISCONNECT THROTTLE CABLE FROM THROTTLE BODY

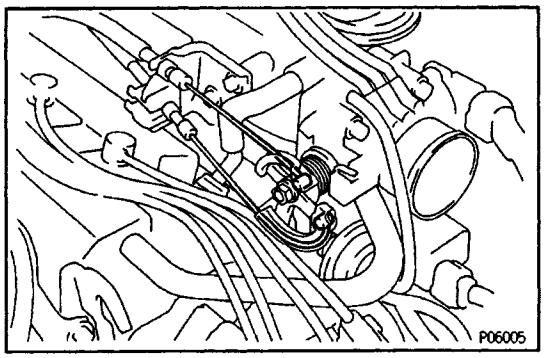

6. (w/ CRUISE CONTROL SYSTEM)

REMOVE CRUISE CONTROL ACTUATOR

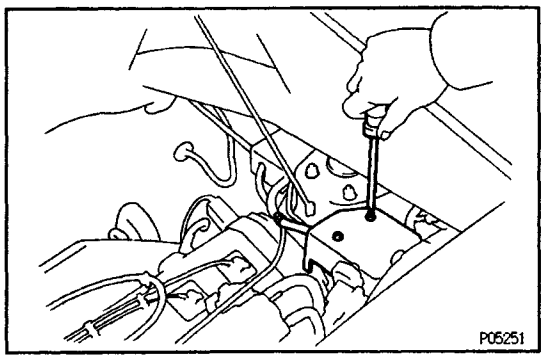

7. DISCONNECT THROTTLE BODY FROM INTAKE MANIFOLD

(a) Disconnect the following connector:

- Throttle position sensor connector
- IACV connector

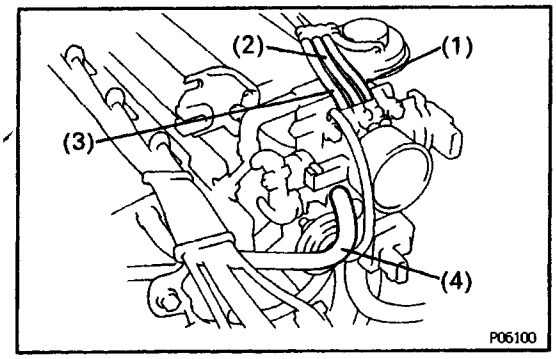

(b) Disconnect the following hoses:
(1) Vacuum hose (from upper port of TVS) from port "P" of throttle body
(2) Vacuum hose (from port "Q" of EGR vacuum modulator) from port "E" of throttle body
(3) Vacuum hose (from port "R" of EGR vacuum modulator) from port "R" of throttle body
(4) PCV hose (from cylinder head) from throttle body

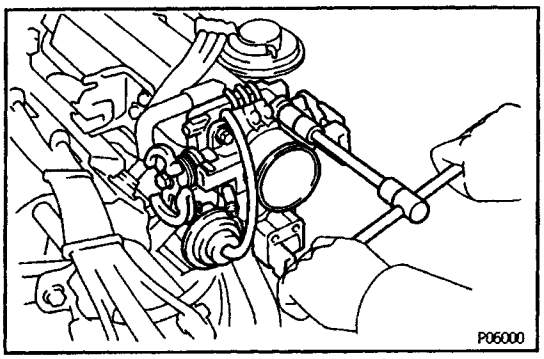

(c) Remove the four bolts, and disconnect the throttle body from the intake manifold.
(d) Remove the throttle body gasket.

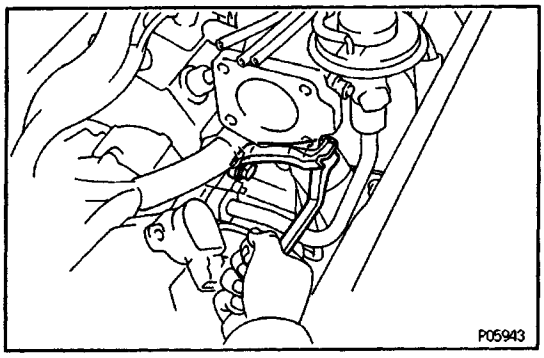

8. DISCONNECT ENGINE WIRE PROTECTOR
(a) Remove the two bolts and air intake chamber stay.

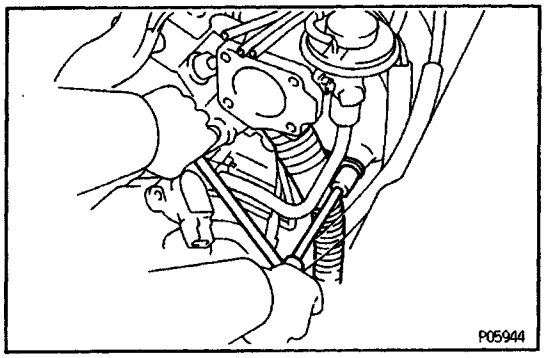

(b) Remove the bolt, and disconnect the engine wire protector from the RH side of the intake manifold.

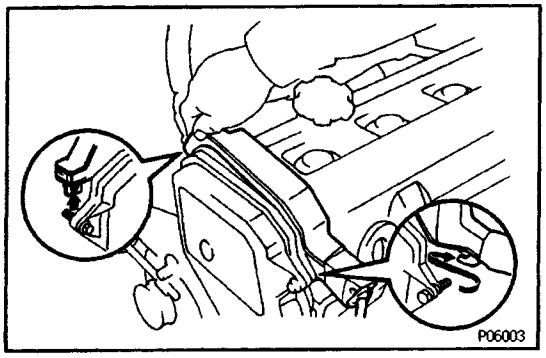

(c) Disconnect the engine wire protector between the No. 3 timing belt and cylinder head cover.

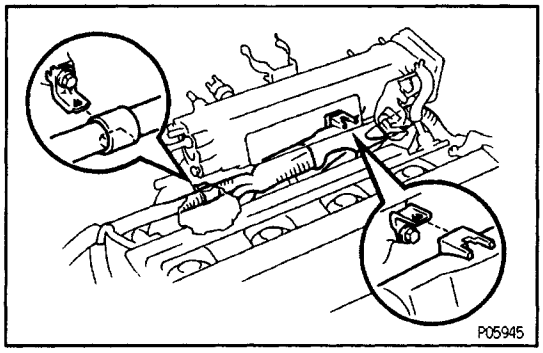

(d) Disconnect the engine wire protector from the two brackets on the front side of the intake manifold.

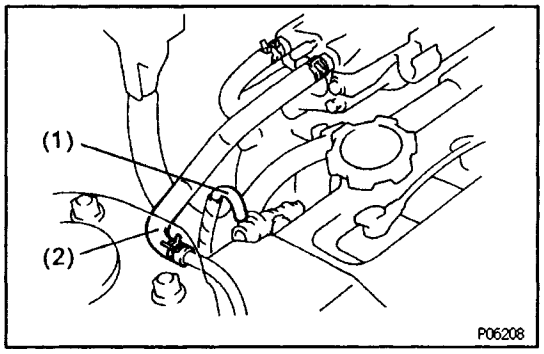

9. DISCONNECT VACUUM HOSE

Disconnect the following hoses:

(1) Vacuum sensing hose from the fuel pressure regulator.

(2) Brake booster vacuum hose from intake manifold

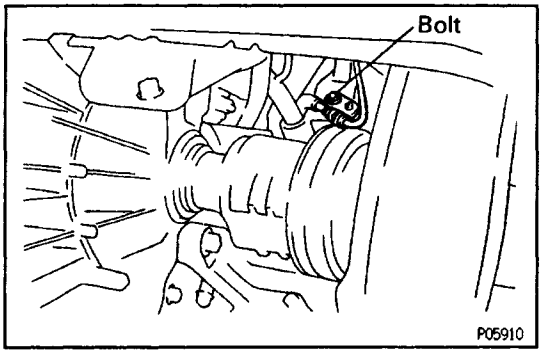

10. DISCONNECT FUEL INLET PIPE AND RETURN HOSE

(a) Remove the bolt holding the fuel inlet pipe to the cylinder head.

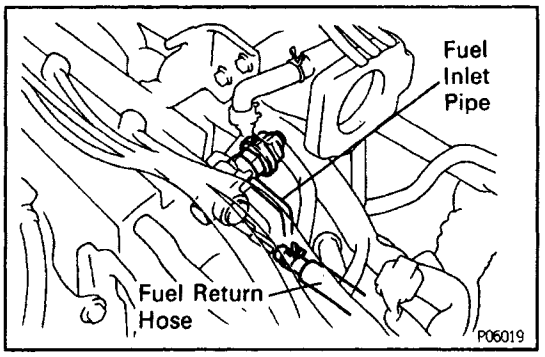

(b) Remove the pulsation damper and two gasket, and disconnect the fuel inlet pipe from the delivery pipe.

(c) Disconnect the fuel return' hose from the return pipe.

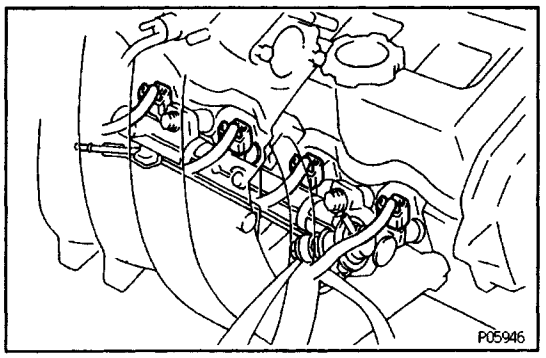

11. REMOVE DELIVERY PIPE AND INJECTORS

(a) Disconnect the four injector connectors.

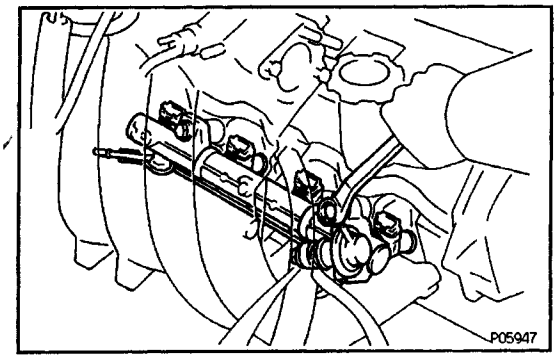

(b) Remove the two bolts, the delivery pipe and four injectors assembly.

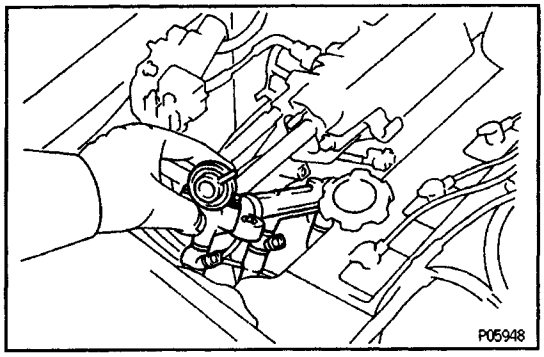

HINT: Remove the delivery pipe and four injectors assembly from the RH side of the engine.

NOTICE: Be careful not to drop the injectors when removing the delivery pipe.

(c) Remove the four insulators and two spacers from the cylinder head.

(d) Pull out the four injectors from the delivery pipe.

(e) Remove the O–ring and grommet from each injector.

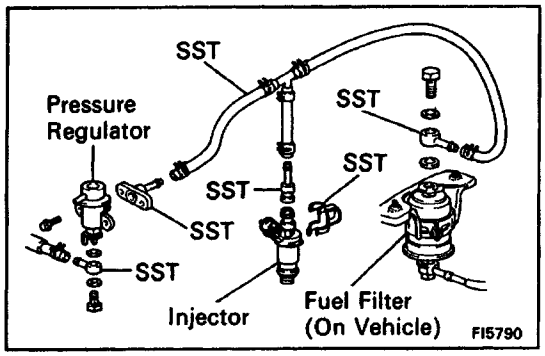

EG133–01

INJECTORS INSPECTION

1. INSPECT INJECTOR INJECTION

CAUTION: Keep injector clean of sparks during the test.

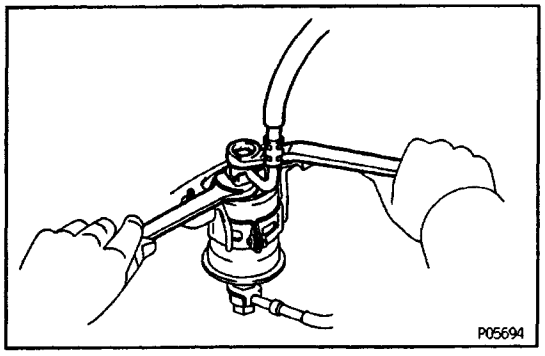

(a) Remove the union bolt and two gaskets, and disconnect the fuel inlet hose from the fuel filter outlet.

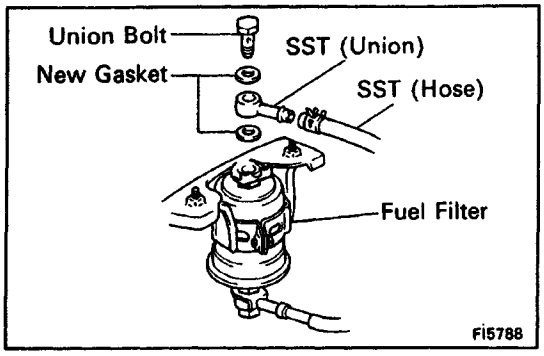

(b) Connect SST (union and hose) to the fuel filter outlet with two new gaskets and union bolts.
SST 09268–41045 (90405–09015)

Torque: 29 N–m (300 kgf–cm, 22 ft–lbf)

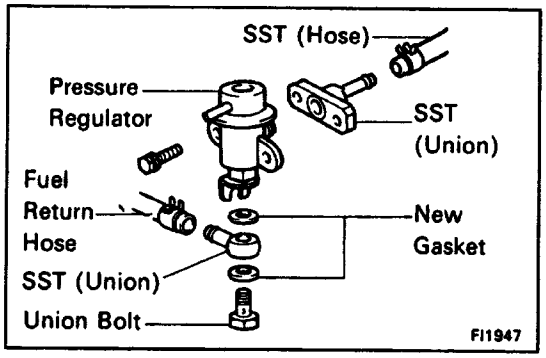

(c) Remove the pressure regulator from the delivery pipe.
(d) Install a new 0–ring to the fuel inlet of pressure regulator.
(e) Connect SST (hose) to the fuel inlet of the pressure regulator with SST (union) and the two bolts.
SST 09268–41045 (09268–41090)
Torque: 5.4 N–m (55 kgf–cm, 48 ft–lbf)
(f) Connect the fuel return hose to the fuel outlet of the pressure regulator with SST (union), two new gaskets and union bolts.
SST 09268–41045 (09268–41080)
Torque: 18 N–m (180 kgf–cm, 13 ft–lbf)

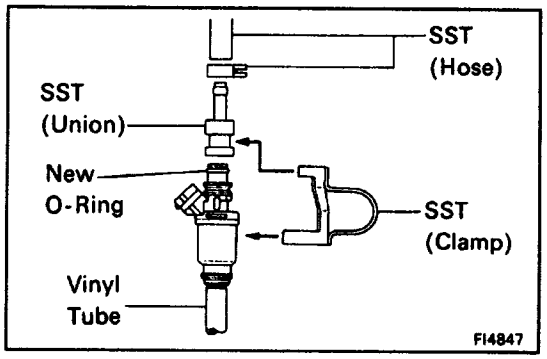

(g) Install the grommet and anew 0–ring to the injector.
(h) Connect SST (union and hose) to the injector, and hold the injector and union with SST (clamp).
SST 09268–41045
(i) Put the injector into the graduated cylinder.
HINT: Install a suitable vinyl hose onto the injector to prevent gasoline from splashing out.

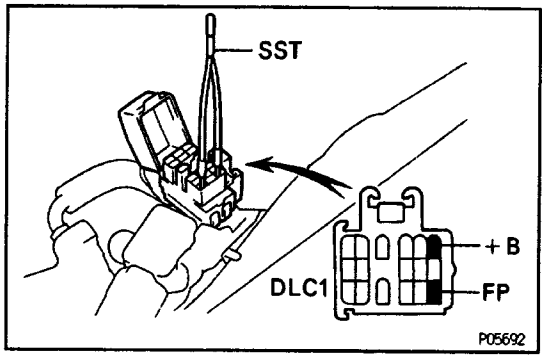

(j) Using SST, connect terminals +B and FP of the data link connector 1.
SST 09843–18020
(k) Reconnect the battery negative (–) cable.

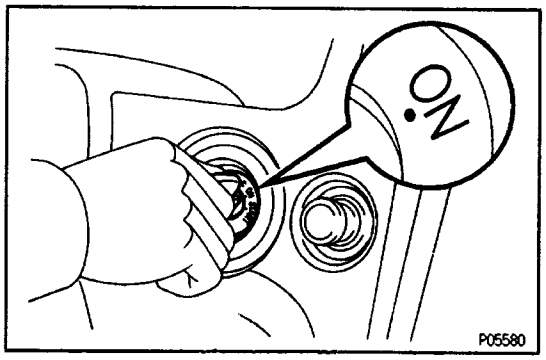

(l) Turn the ignition switch ON.
NOTICE: Do not start the engine.

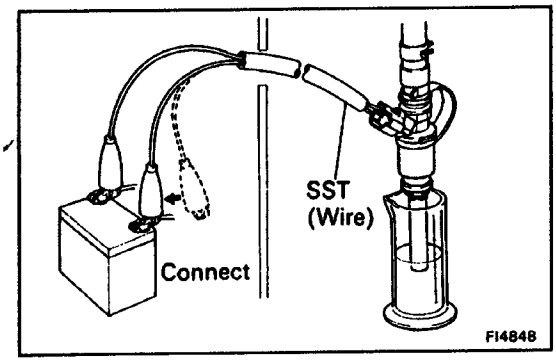

(m) Connect SST (wire) to the injector and battery for 15 seconds, and measure the injection volume with a graduated cylinder. Test each injector two or three times.
SST 09842–30070

Volume:
49 – 59 cm^2 (3.0 – 3.6 cu in.) per 15 sec.

Difference between each injector:
5 cm^2 (0.3 cu in.) or less

If the injection volume is not as specified, replace the injector.

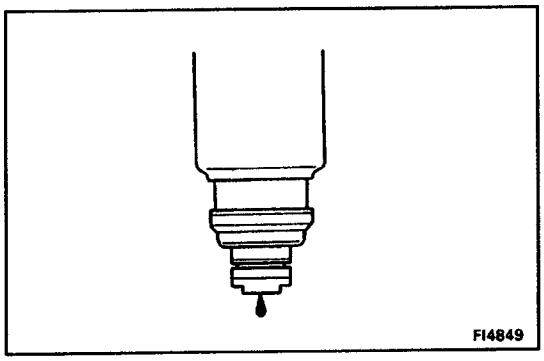

2. INSPECT LEAKAGE

(a) In the condition above, disconnect he test probes of SST (wire) from the battery and check and check the fuel leakage from the injector.
SST 09842–30070

Fuel drop:
One drop or less per minute

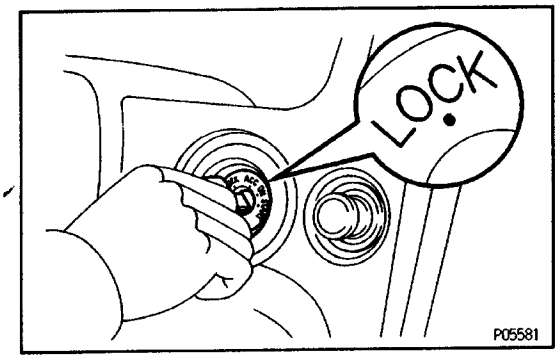

(b) Turn the ignition switch OFF.
(c) Disconnect the battery negative (–) cable.
(d) Remove the SST.
SST 09268–41045, 09843–18020

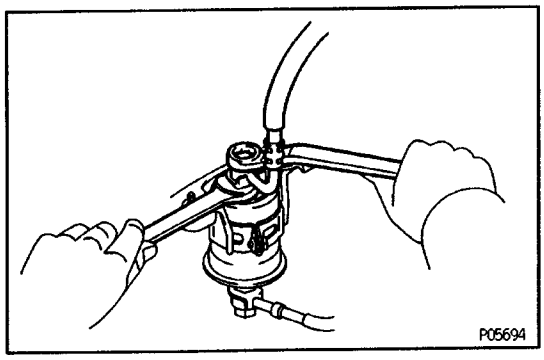

(e) Reinstall the fuel inlet hose to the fuel filter outlet with the two new gaskets and the union bolt.

Torque: 29 N–m (300 kgf–cm, 22 ft–lbf)

EG195–01

INJECTORS INSTALLATION

(See Components for Removal and Installation)

1. INSTALL INJECTORS AND DELIVERY PIPE

(a) Install a new grommet to the injector.

(b) Apply a light coat of gasoline to a new 0–ring and install it to the injector.

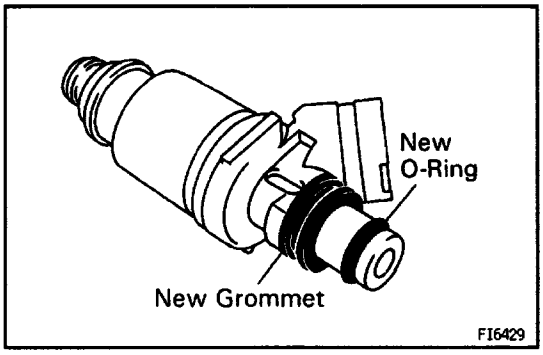

(c) While turning the injector left and right, install it to the delivery pipes. Install the four injectors.

(d) Position the injector connector upward.

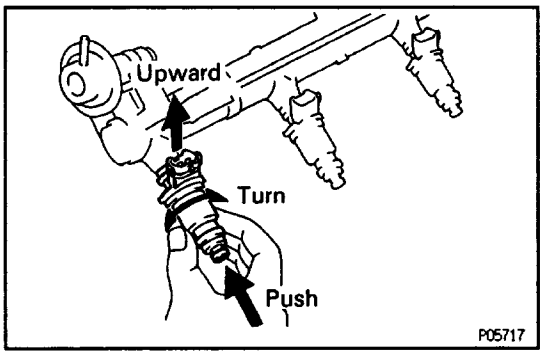

(e) Place four new insulators and the two spacers in position on the cylinder head.

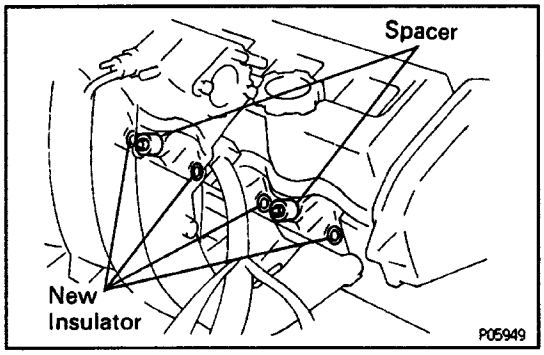

(f) Place the four injectors and delivery pipe assembly in position on the cylinder head.

(g) Temporarily install the two bolts holding the delivery pipe to the cylinder head.

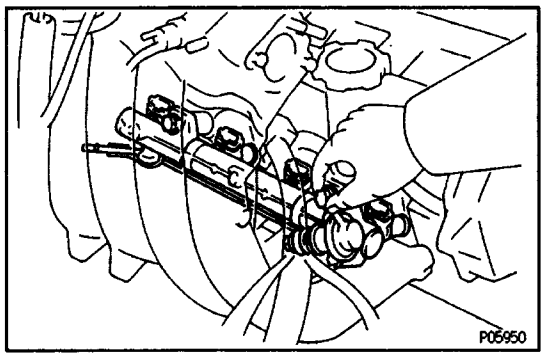

(h) Check that the injectors rotate smoothly.

HINT: If injectors do not rotate smoothly, the probable cause is incorrect installation of O –rings. Replace the O–rings.

(i) Position the injector connector upward.

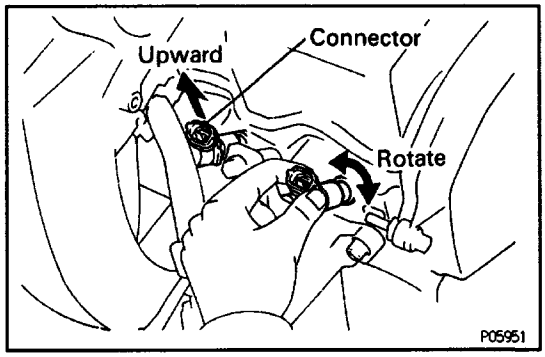

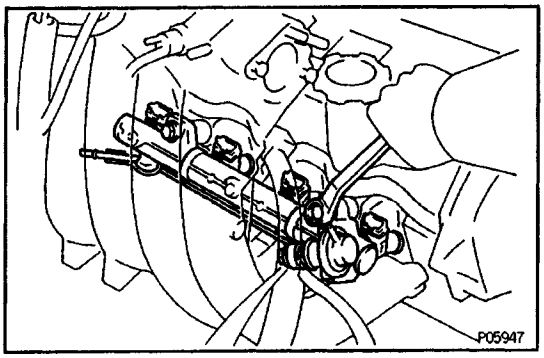

(j) Tighten the two bolts holding the delivery pipe to the cylinder head.

Torque: 13 N–m (130 kgf–cm, 9 ft–lbf)

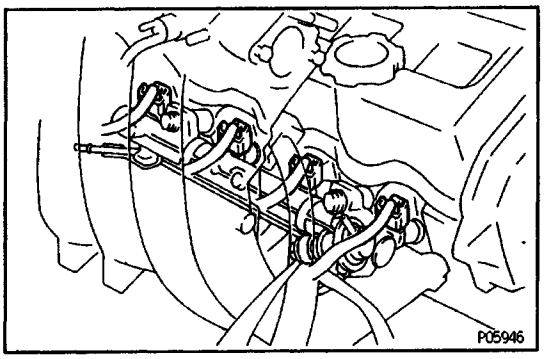

(k) Connect the four injector connectors.

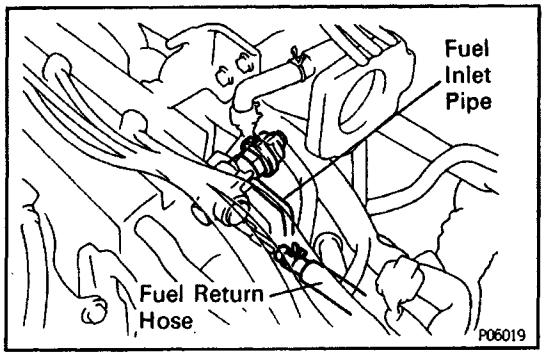

2. CONNECT FUEL INLET PIPE AND RETURN HOSE

(a) Connect the fuel inlet pipe to the delivery pipe with two new gaskets and the pulsation damper.

Torque: 34 N–m (350 kgf–cm, 25 ft–lbf)

(b) Connect the fuel return hose.

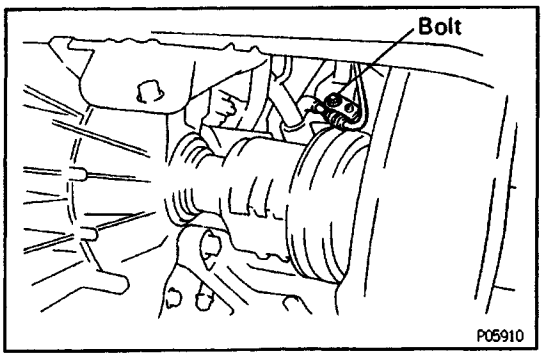

(c) Install the fuel inlet pipe to the cylinder head with the bolt.

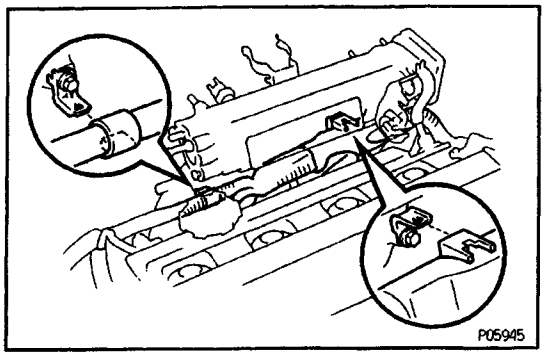

3. INSTALL ENGINE WIRE PROTECTOR

(a) Connect the the engine wire protector to the brackets on the front side of the intake manifold.

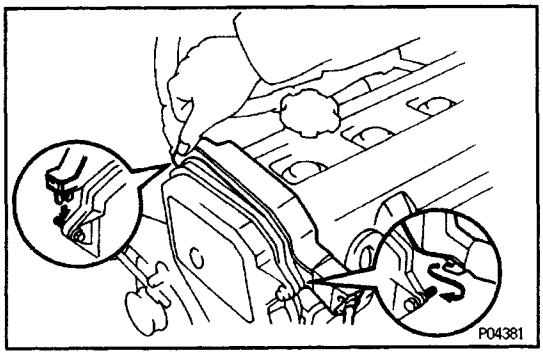

(b) Install the two clamps of the engine wire protector to each bolt.

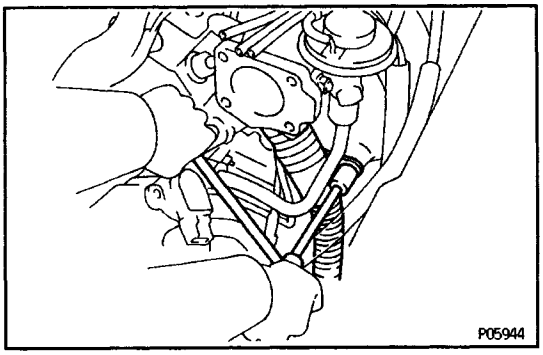

(c) Install the engine wire protector with the bolt.

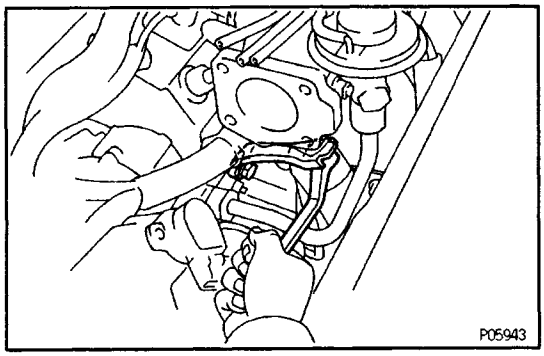

(d) Install the air intake chamber stay with the two bolts.
Torque: 42 N–m (425 kgf–cm, 31 ft–lbf)

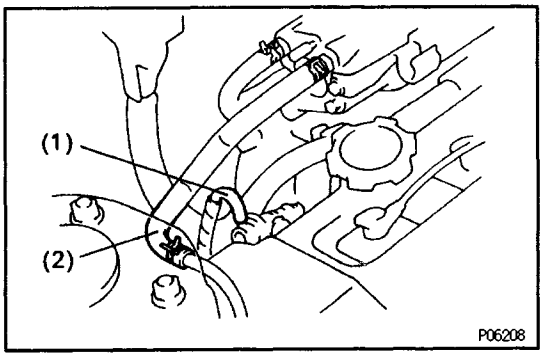

4. CONNECT VACUUM HOSES

Connect the following hoses:

- Vacuum sensing hose to fuel pressure regulator
- Brake booster vacuum hose to intake manifold

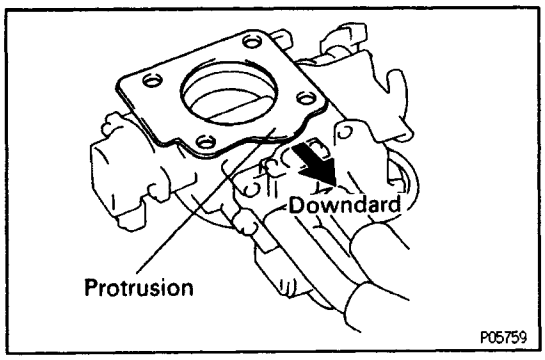

5. INSTALL THROTTLE BODY

(a) Place a new gasket on the throttle body, facing the protrusion downward.

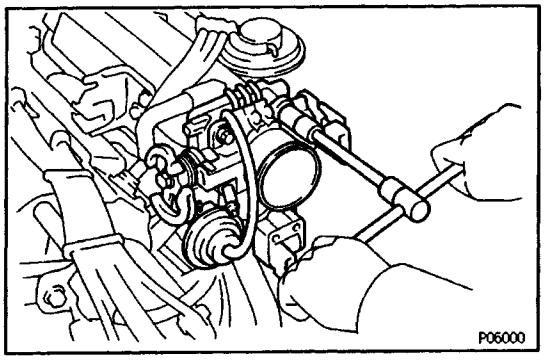

(b) Install the throttle body with the four bolts.

Torque: 19 N–m (195 kgf–cm, 14 ft–lbf)

HINT: Different bolt lengths are used for the upper and lower sides.

Bolt length:

45 mm (1.77 in.) for upper side
55 mm (2.17 in.) for lower side

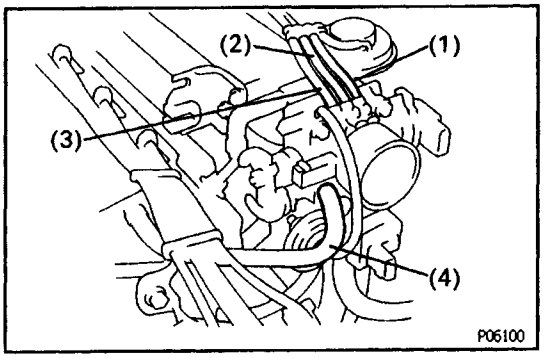

(c) Connect the following hoses:

(1) Vacuum hose (from upper port of TVS) to port "P" of throttle body
(2) Vacuum hose (from port "Q" of EGR vacuum modulator) to port "E" of throttle body
(3) Vacuum hose (from port "R" of EGR vacuum modulator) to port "R" of throttle body
(4) PCV hose (from cylinder head) to throttle body

(d) Connect the following connectors:

Throttle position sensor connector
IACV connector

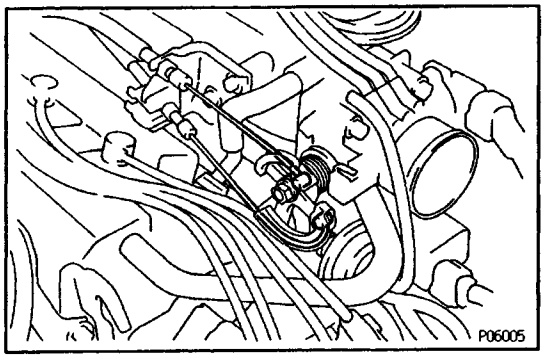

6. CONNECT ACCELERATOR CABLE TO THROTTLE BODY

7. (A/T)

CONNECT THROTTLE CABLE TO THROTTLE BODY

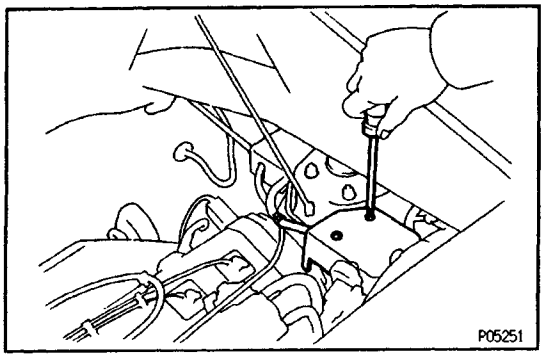

8. (w/ CRUISE CONTROL SYSTEM)

INSTALL CRUISE CONTROL ACTUATOR

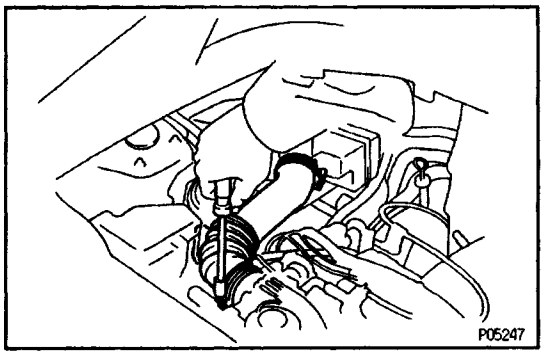

9. INSTALL AIR CLEANER HOSE

10. CONNECT CABLE TO NEGATIVE TERMINAL OF BATTERY

11. START ENGINE AND CHECK FOR FUEL LEAKS

12. INSTALL ENGINE HOOD SIDE PANELS

INTAKE AIR TEMPERATURE SENSOR (IATS)

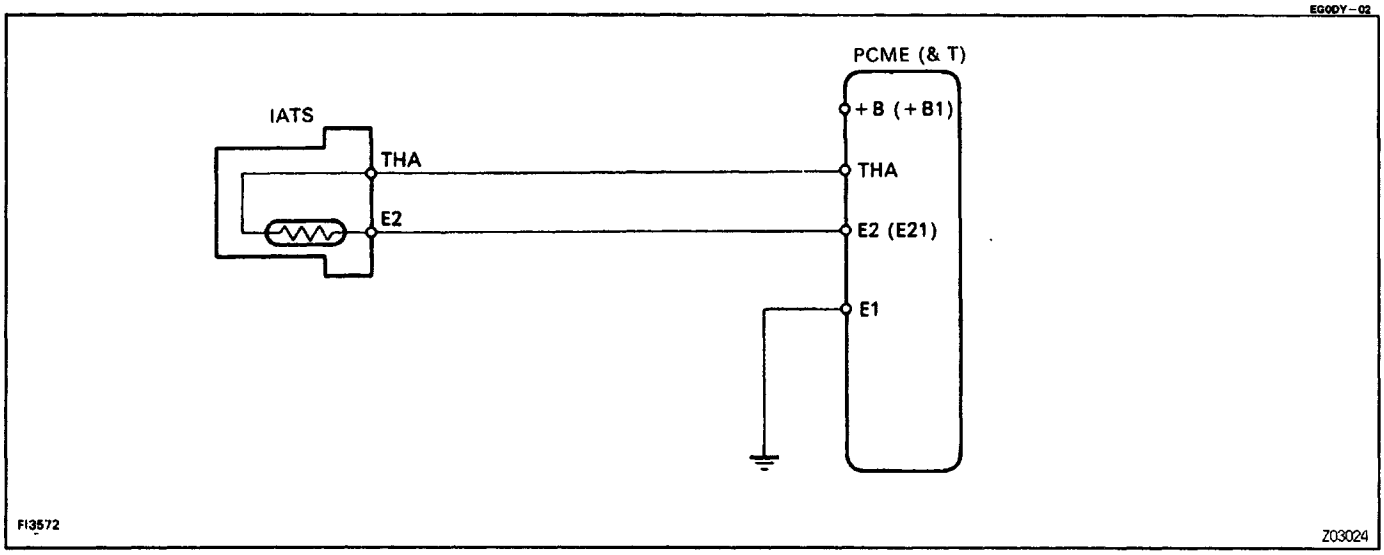

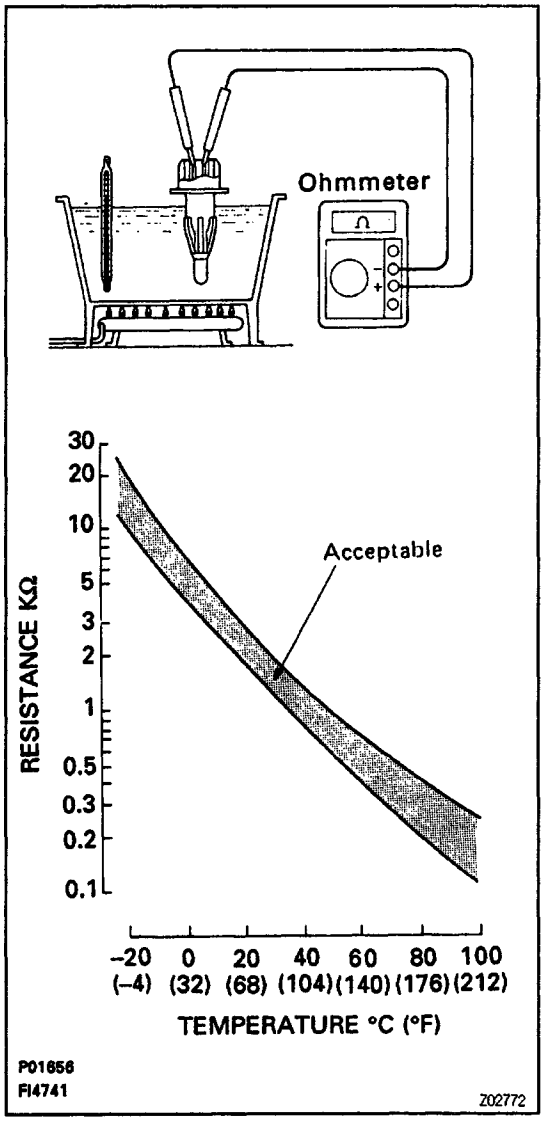

IATS INSPECTION

1. REMOVE IATS

2. INSPECT IATS

Using an ohmmeter, measure the resistance between the terminals.

Resistance:

Refer to the chart graph

If the resistance is not as specified, replace the IATS.

3. REINSTALL IATS

MANIFOLD ABSOLUTE PRESSURE SENSOR (MAP)

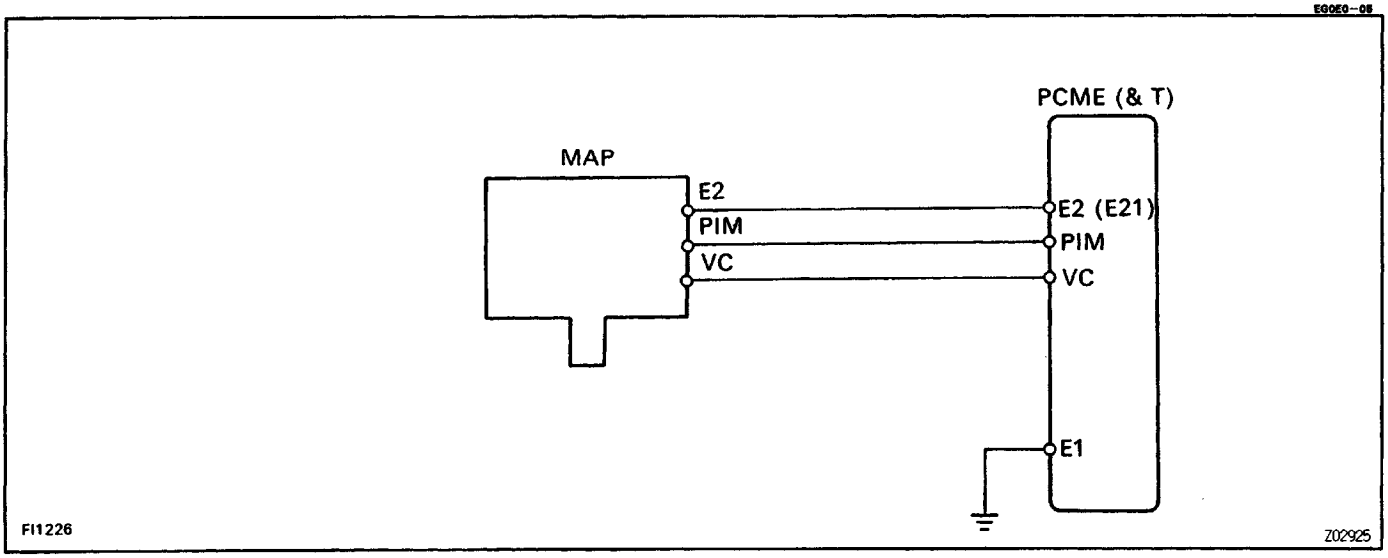

EG14N–01

MAP INSPECTION

1. INSPECT POWER SOURCE VOLTAGE OF MAP

(a) Disconnect the MAP connector.

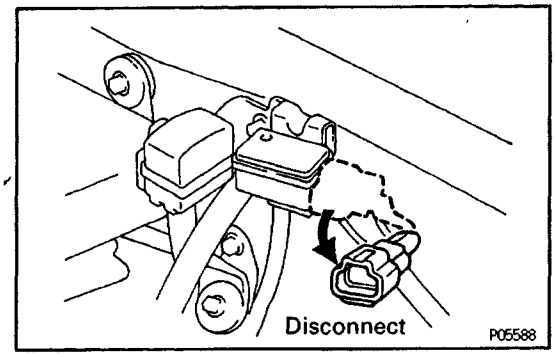

(b) Turn the ignition switch ON.

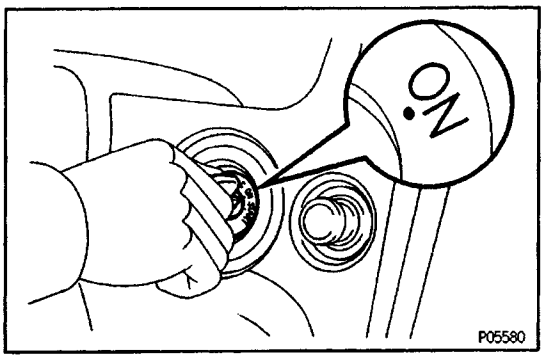

(c) Using a voltmeter, measure the voltage between connector terminals VC and E2 of the wiring harness side.

Voltage:

4.5 – 5.5 V

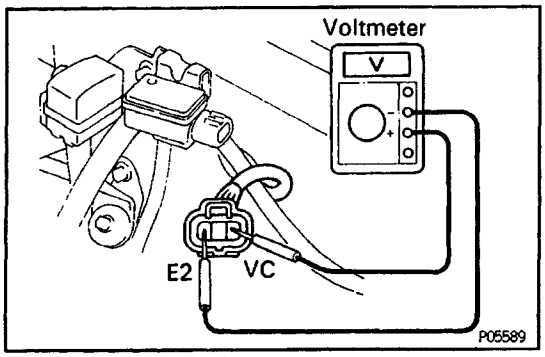

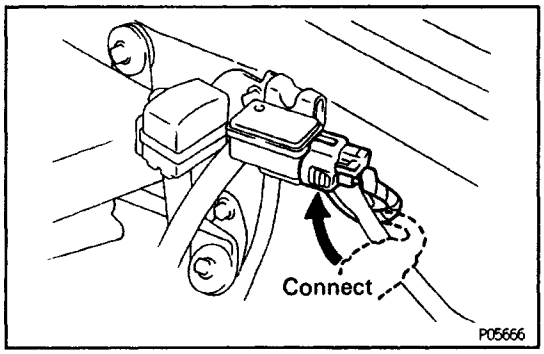

(d) Turn the ignition switch OFF.
(e) Reconnect the MAP connector.

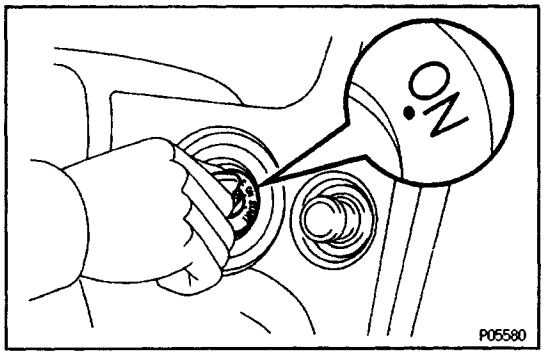

2. INSPECT POWER OUTPUT OF MAP

(a) Turn the ignition switch ON.

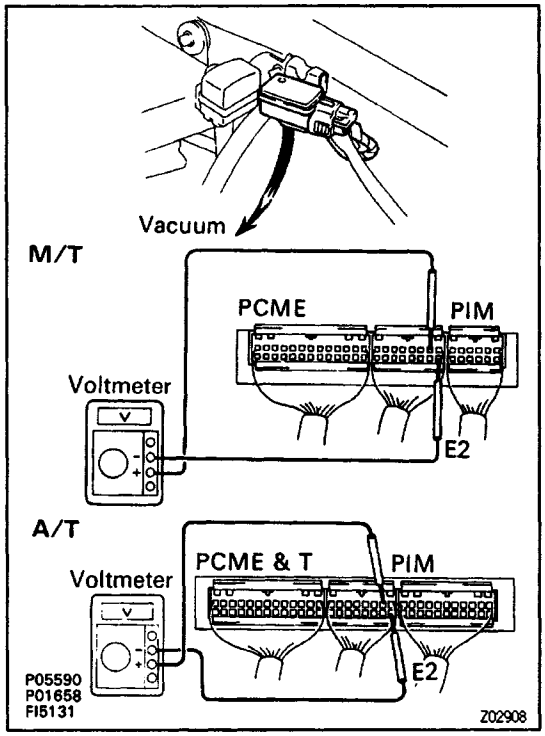

(b) Disconnect the vacuum hose on the air intake manifold side.
(c) Connect a voltameter to terminals PIM and E2 of the PCM, and measure the output voltage under ambient atmospheric pressure.
(d) Apply vacuum to the MAP in 13.3 kPa (100 mmHg, 3.94 in.Hg) segments to 66.7 kPa (500 mmHg, 19.69 in.Hg).
(e) Measure the voltage drop from step (c) above for each segment.

Voltage drop:

Applied Vacuum kPa (mmHg, in.Hg)	13.3 (100, 3.94)	26.7 (200, 7.87)	40.0 (300, 11.81)	53.5 (400, 15.75)	66.7 (500, 19.69)
Voltage drop V	0.3 – 0.5	0.7 – 0.9	1.1 – 1.3	1.5 – 1.7	1.9 – 2.1

V00494

(f) Reconnect the vacuum hose to the intake manifold.

MPI MAIN RELAY

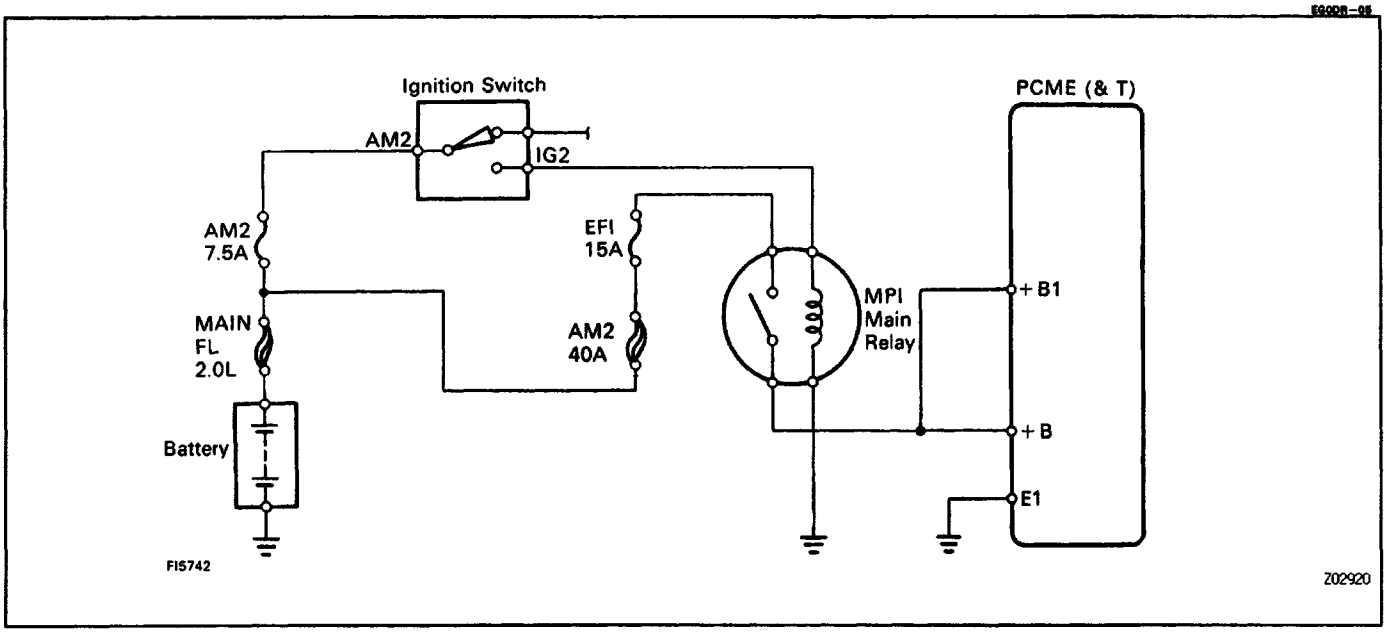

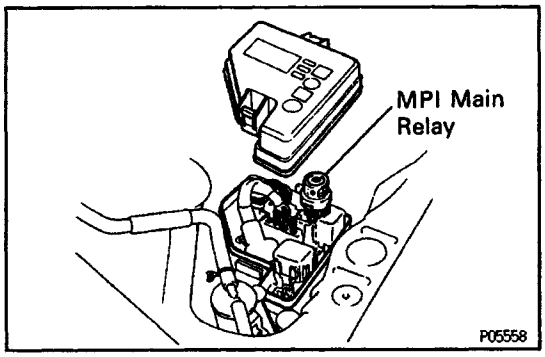

MPI MAIN RELAY ("EFI") INSPECTION

1. REMOVE MPI MAIN RELAY

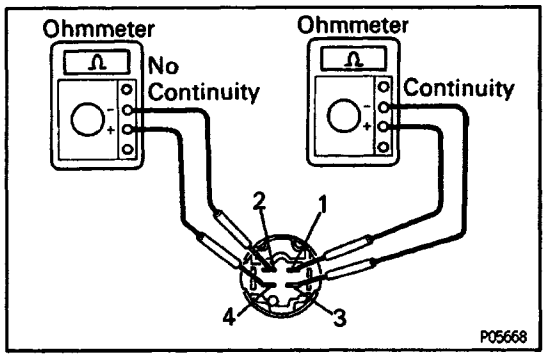

2. INSPECT MPI MAIN RELAY

A. Inspect relay continuity

(a) Using an ohmmeter, check that there is continuity between terminals 1 and 3.

(b) Check that there is no continuity between terminals 2 and 4.

If continuity is not as specified, replace the relay.

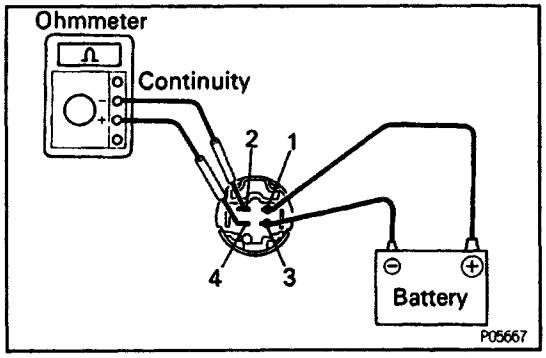

B. Inspect relay operation

(a) Apply battery voltage across terminals 1 and 3.

(b) Using an ohmmeter, check that there is continuity between the 2 and 4.

If operation is not as specified, replace the relay.

3. REINSTALL MPI MAIN RELAY

OPERATION

FUEL SYSTEM

EG0CC – 02

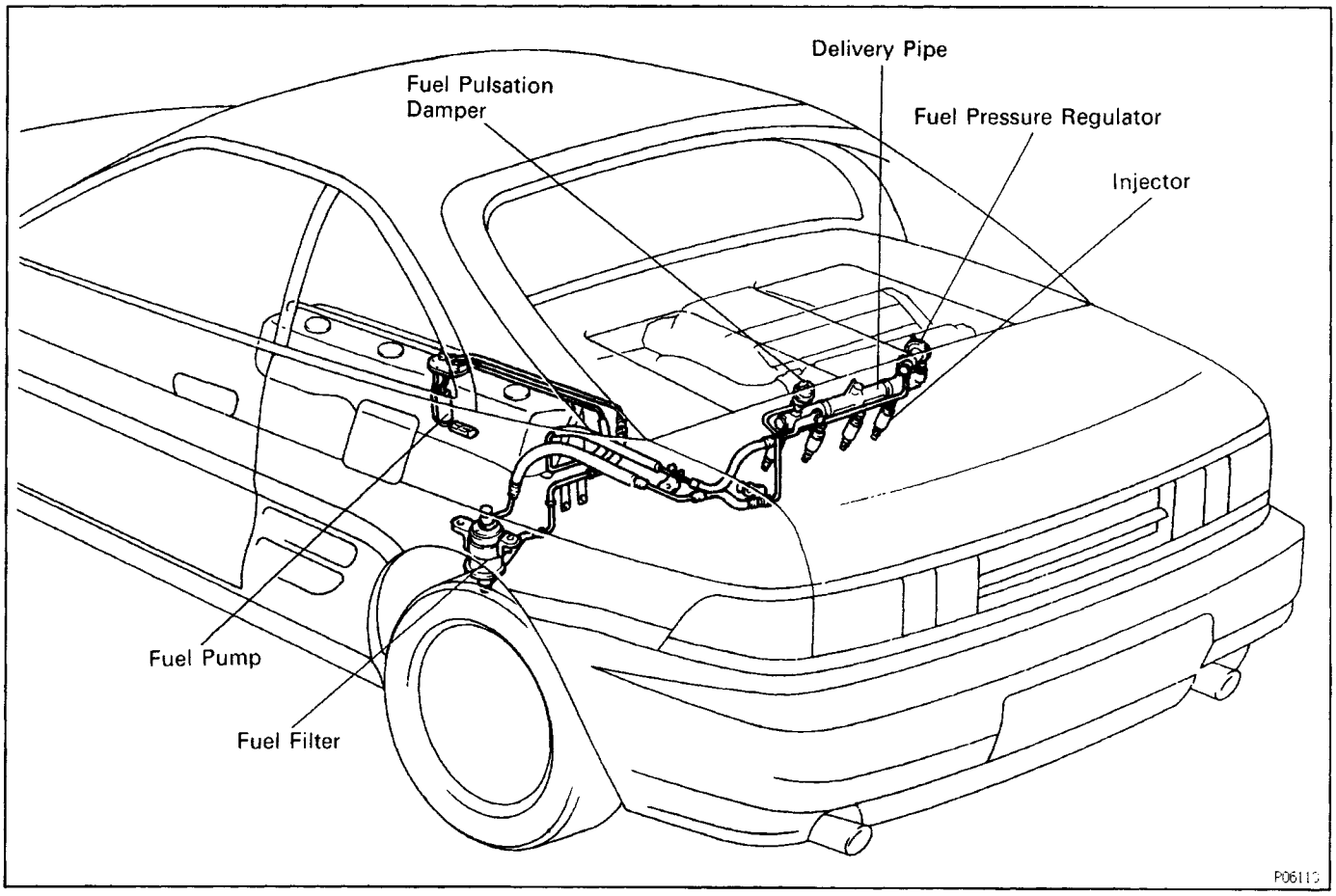

Fuel pumped up by the fuel pump, flows through the fuel filter and is distributed to each injector at a set pressure maintained by the pressure regulator.

The fuel pressure regulator adjusts the pressure of the fuel from the fuel line (high pressure side) to a pressure 284 kPa (2.9 kgf/cm^2, 41 psi) higher than the pressure inside the intake manifold, and excess fuel is returned to the fuel tank through the return pipe.

The pulsation damper absorbs the slight fluctuations in fuel pressure caused by fuel injector from the injector.

The injectors operate on input of injection slights from the PCME (& T) and inject fuel into the intake manifold.

EG0CD – 02

AIR INDUCTION SYSTEM

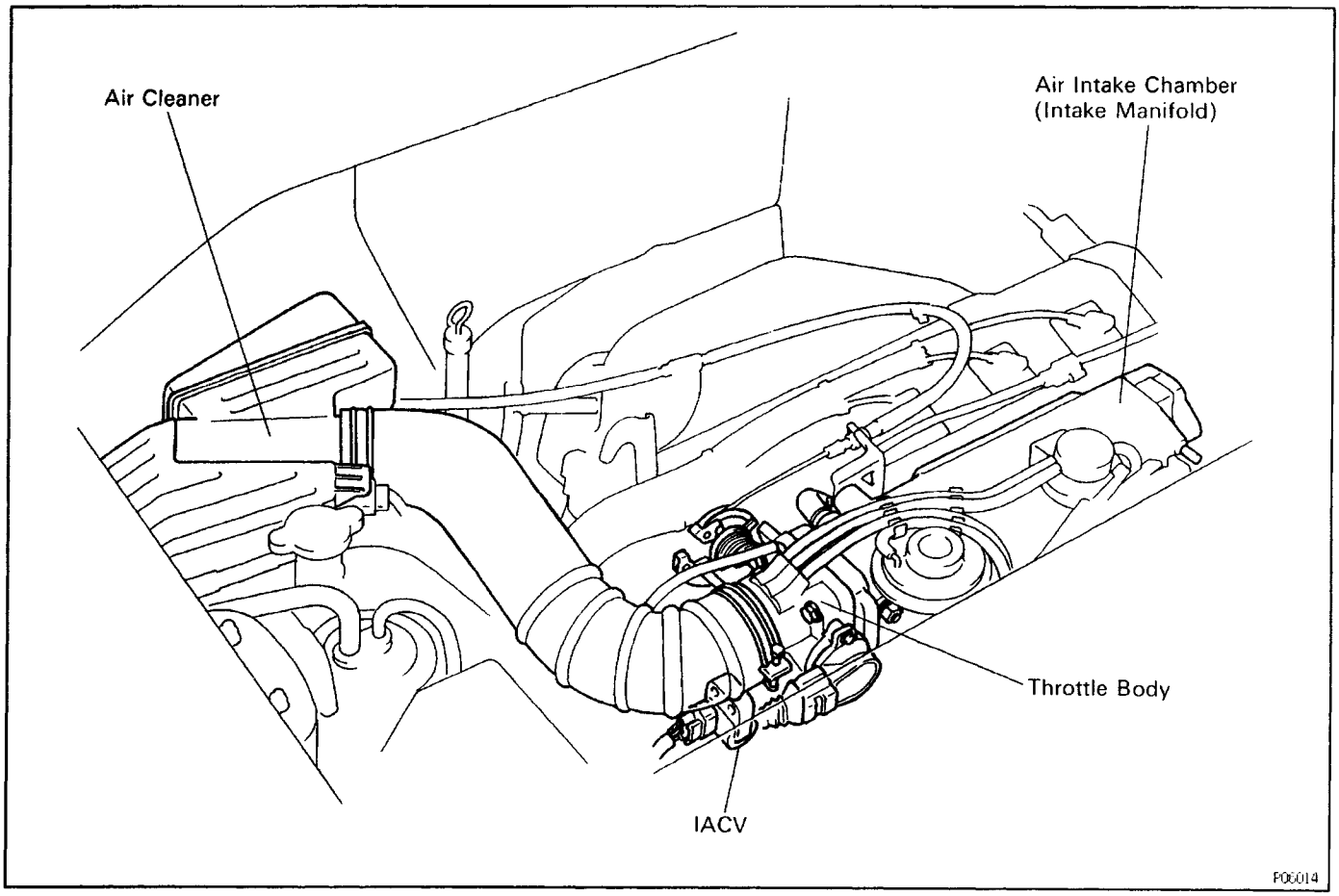

Air is filtered through the air cleaner and the amount flowing to the air intake chamber is determined according to the throttle valve opening in the throttle body and the engine rpm. Intake air controlled by the throttle valve opening is distributed from the air intake chamber to the
manifold of each cylinder and is drawn into the combination chamber.

At low temperatures the IACV opens and the air flows through the IACV and the throttle body, into the air intake chamber, During engine warming up, even if the throttle valve is completely closed, air flows to the air intake chamber, thereby increasing the idle speed (first idle operation).

The air intake chamber prevents pulsation of the intake air. It also prevents intake air interference in each cylinder.

ELECTRONIC CONTROL SYSTEM

EGOCE–02

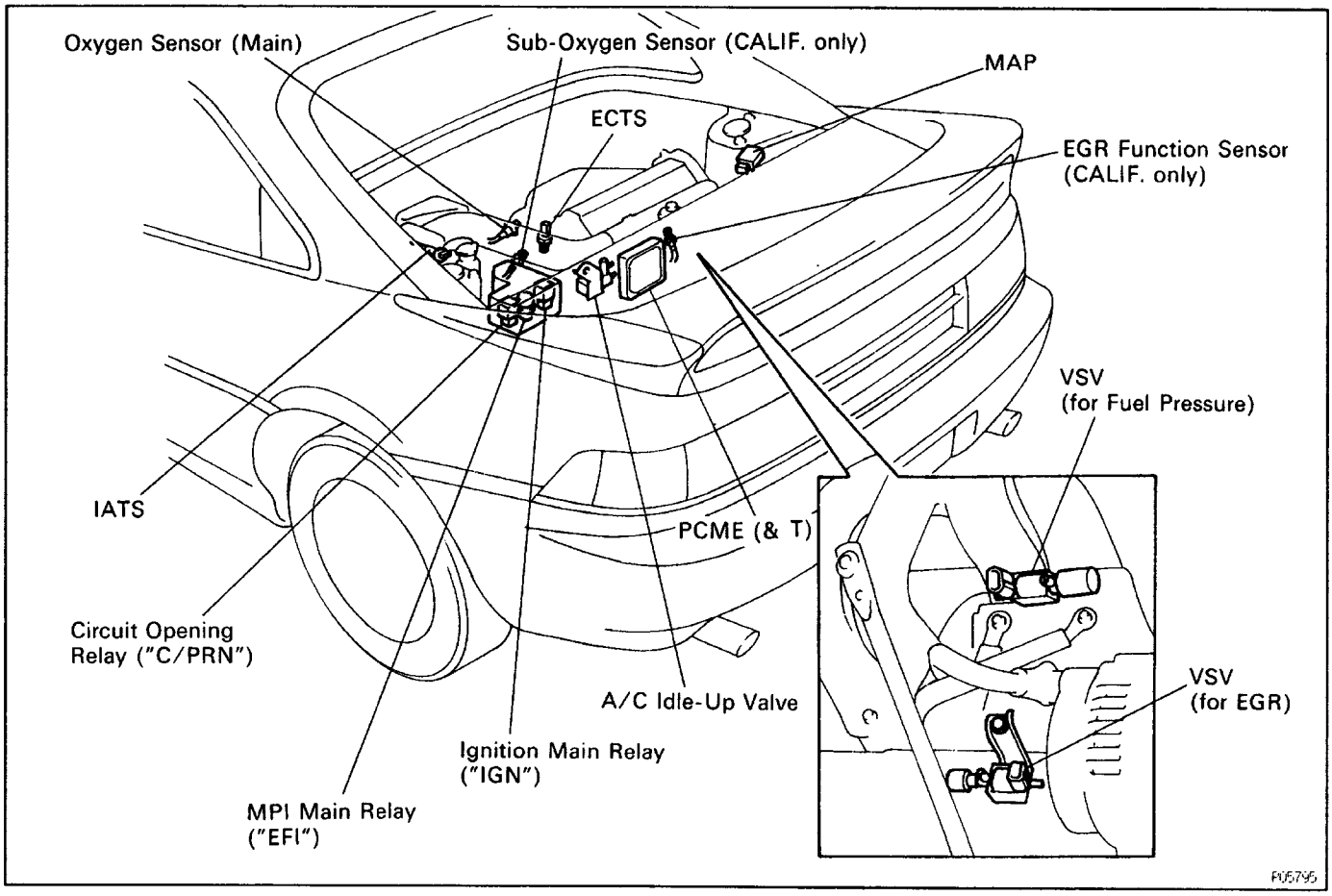

The control system consists of sensors which detect various engine conditions, and a PCME (& T) which determines the injection volume (timing) based on the signals from the sensors.

The various sensors detect the intake air pressure, engine rpm, oxygen density in the exhaust gas,

coolant temperature, intake air temperature and atmospheric etc. and convert the information into an electrical signal which is sent to the PCME (& T). Based on these signals, the PCME (& T)

calculates the optimum ignition timing for the current conditions and operates the injectors.

The PCME (& T) not only controls the fuel injection timing, but also the self diagnostic function which records the occurrence of a malfunction, ignition timing control, idle rpm control and EGR control.

OXYGEN SENSOR (Main)

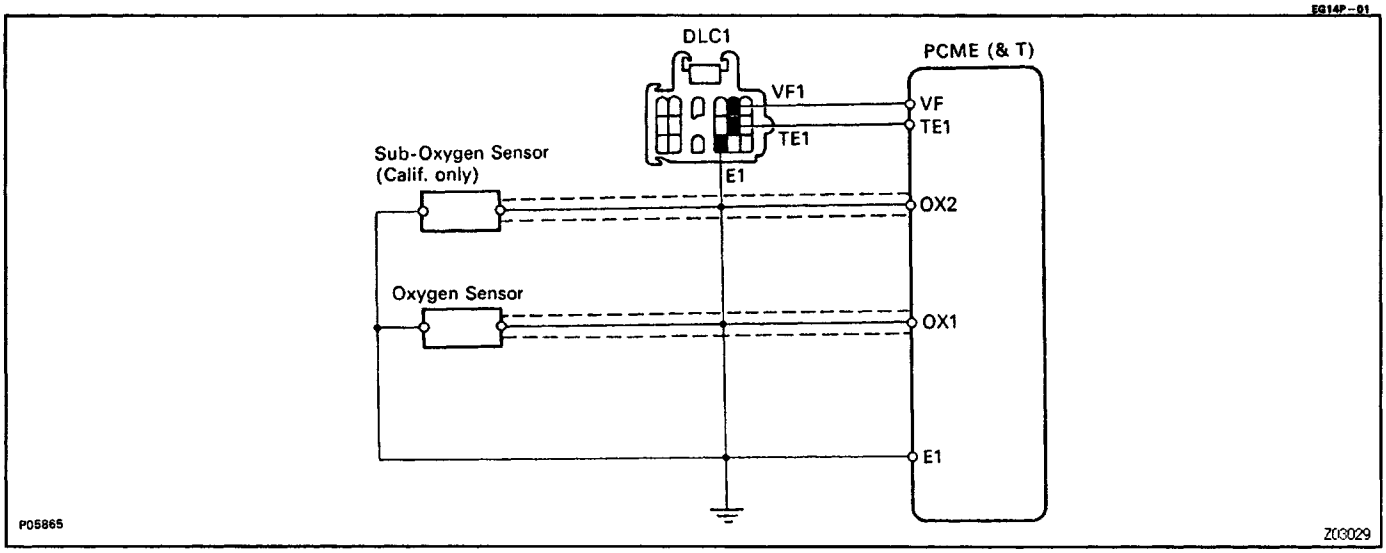

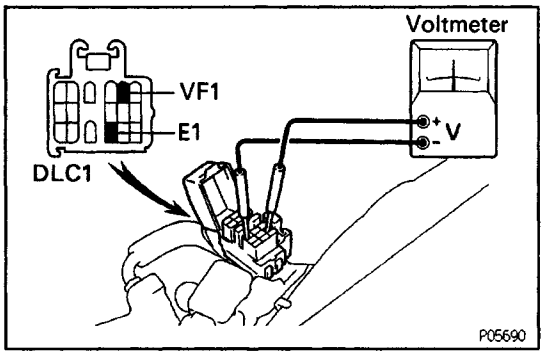

EG14R–01

OXYGEN SENSOR INSPECTION

1. WARM UP ENGINE

Allow the engine to warm up to normal operating temperature.

2. INSPECT FEEDBACK VOLTAGE

Connect the positive (+) probe of a voltmeter to terminal VF1 of the data link connector 1, and nega–tive (–) probe to terminal E1. Perform the test as follows:

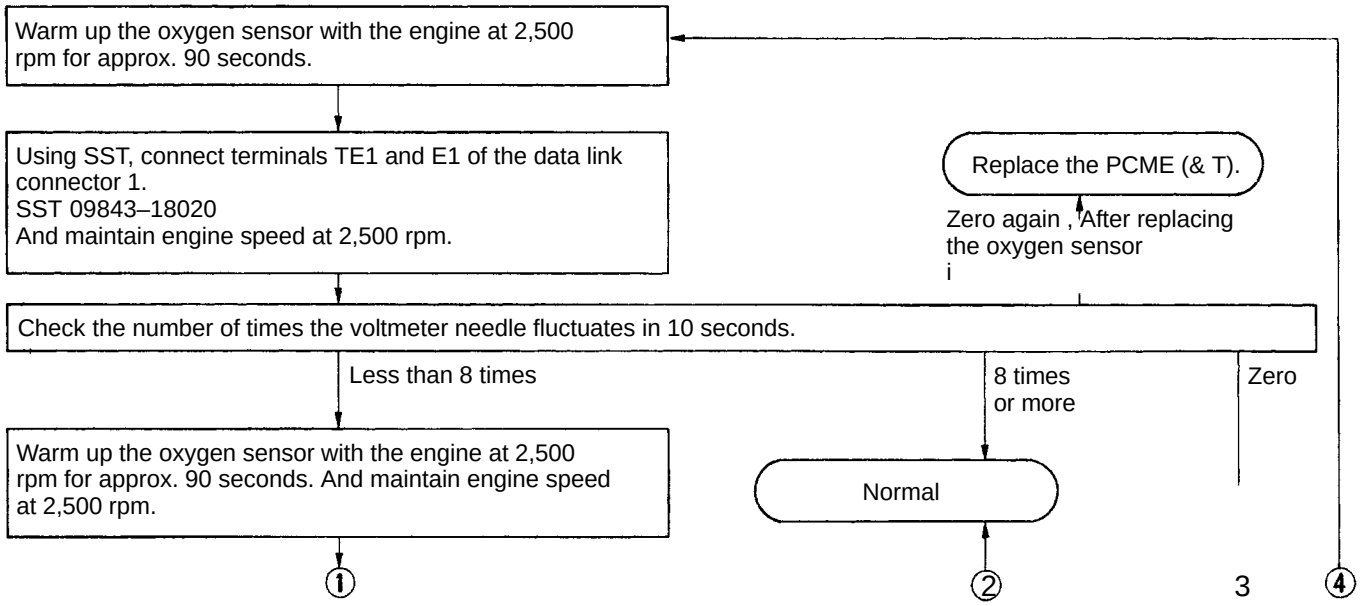

CONTINUED ON PAGE EG2–323

V01051

CONTINUED FROM PAGE EG2–322

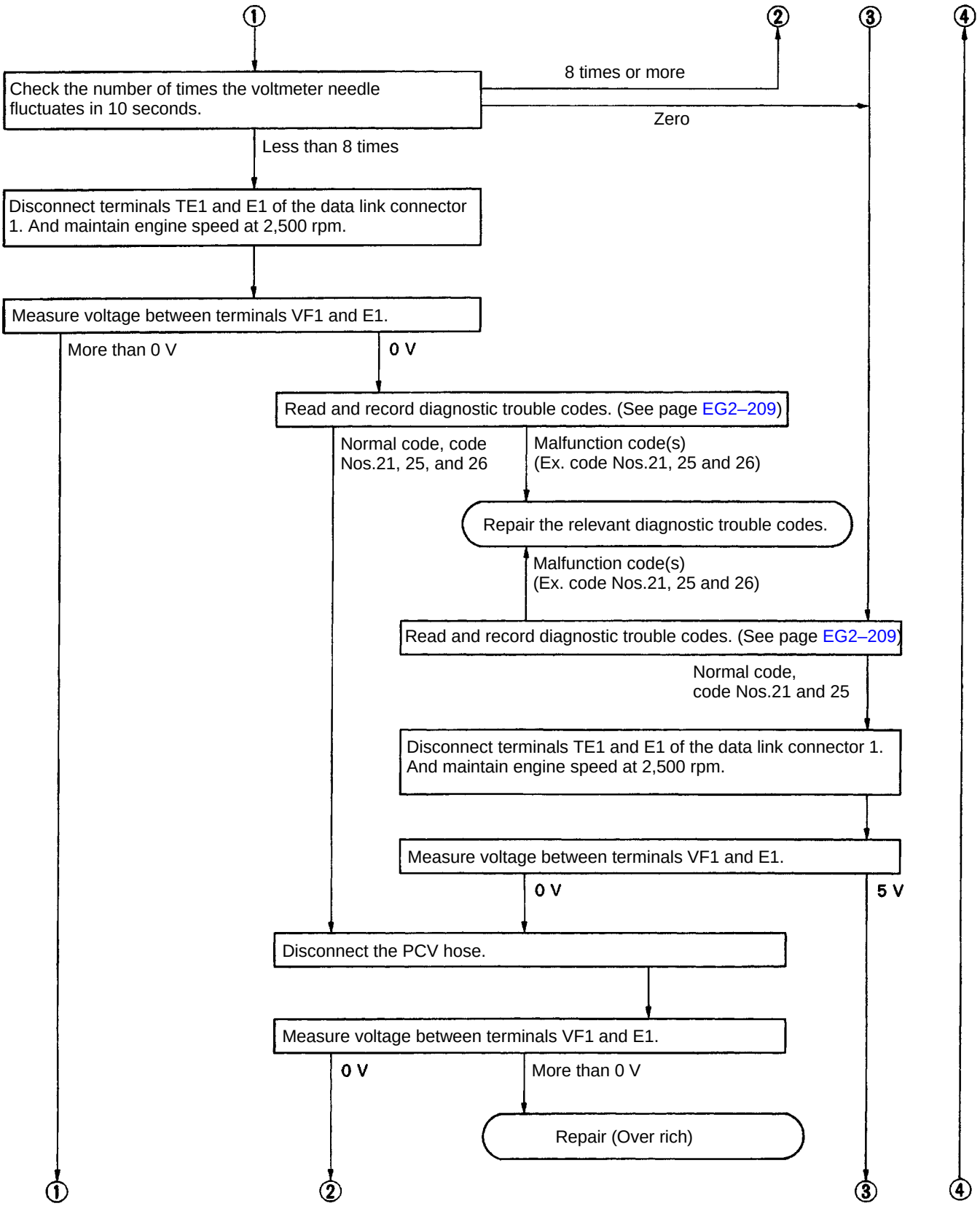

CONTINUED ON PAGE EG2–324

V00884

CONTINUED FROM PAGE EG2–323

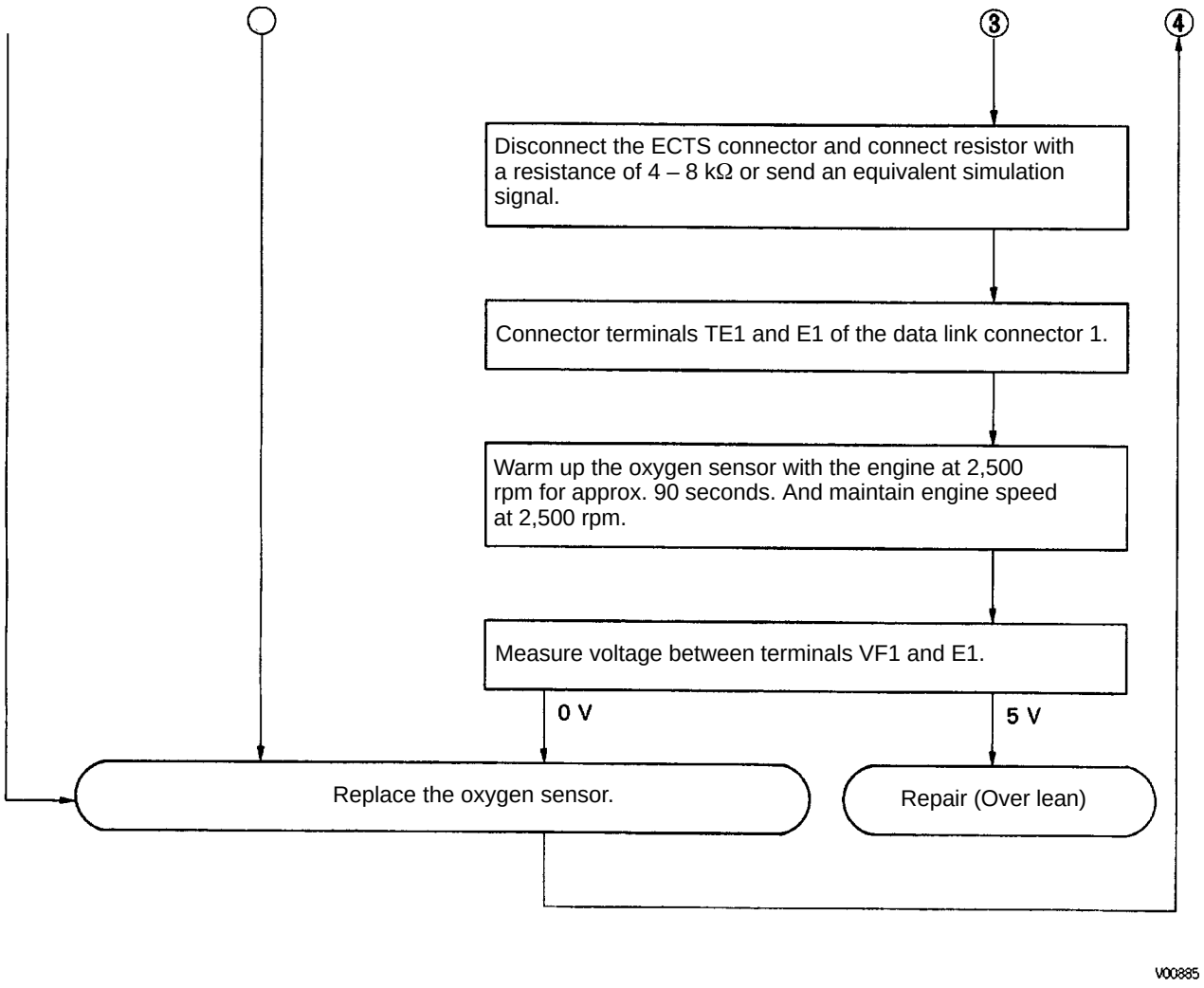

POWERTRAIN CONTROL MODULE ENGINE (& ECT) (PCME (& T))

EG0E8–03

PCME (& T) FOR REMOVAL AND INSTALLATION

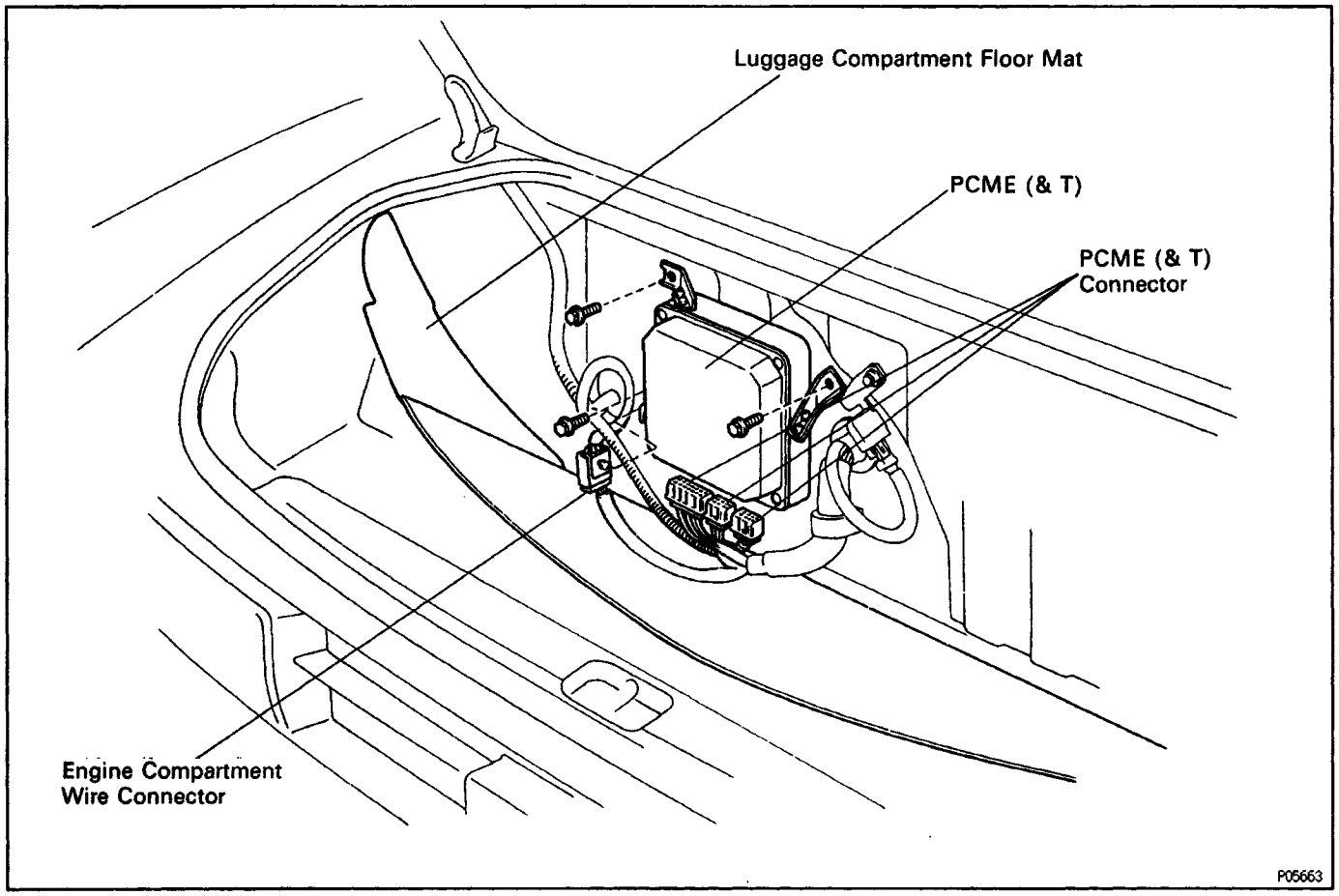

EG1BH–01

PCME INSPECTION

(See Components for Removal and Installation)

HINT: The MPI circuit can be checked by measuring the resistance and voltage at the wiring connectors of the PCME (& T).

1. DISCONNECT FRONT SIDE OF LUGGAGE COMPARTMENT FLOOR MAT FROM PARTITION PANEL

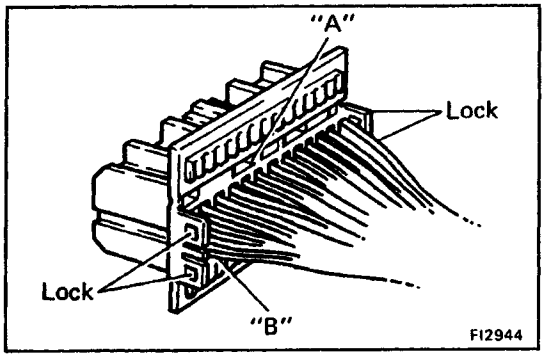

2. PREPARATION

(a) Disconnect the three connectors from the PCME (&T).

(b) Remove the locks as shown in the illustration so that the tester probe(s) can easily come in.

NOTICE: Pay attention to sections A and B in the illustration which can easily broken.

(c) Reconnect the three connectors to the PCME (& T).

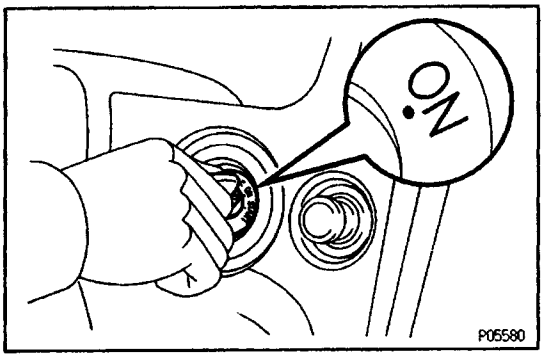

3. INSPECT VOLTAGE OF PCME (& T)

(a) Turn the ignition switch ON.

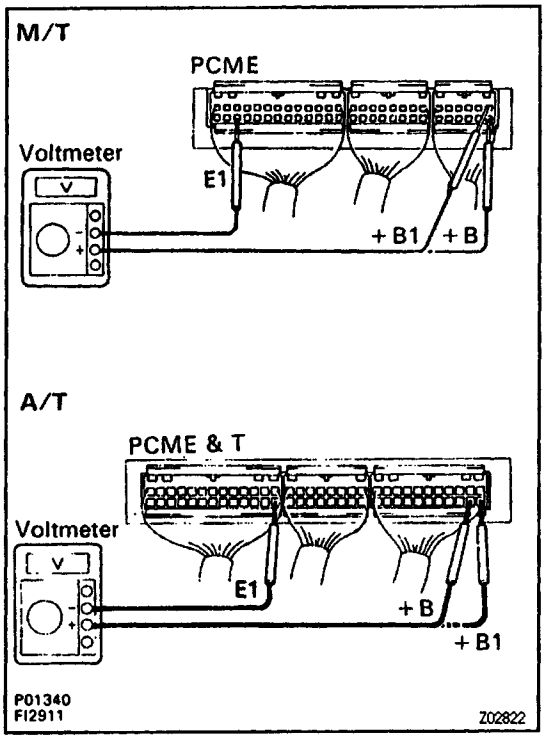

(b) Measure the voltage between each terminal of the wiring connectors.

HINT:

- Perform all voltage measurements with the connectors connected.
- Verify that the battery voltage is 11 V or more when the ignition switch is ON.

Voltage at PCME (& T) Wiring Connectors

Terminals	Condition		STD voltage (V)
+B, +B1 – E1	IG SW ON		9 – 14
BATT – E1	–		9 – 14
IDL – E2	IG SW ON	Throttle valve open	9 – 14
VTA – E2	IG SW ON	Throttle valve fully closed (Throttle opener must be cancelled first)	0.3 – 0.8
	IG SW ON	Throttle valve fully open	3.2 – 4.9
PIM – E2	IG SW ON		3.3 – 3.9
VC – E2	IG SW ON		4.5 – 5.5
#10 – E01, #20 – E02	IG SW ON		9 – 14
THA – E2	IG SW ON	Intake air temp. 20°C (68°F)	0.5 – 3.4
THW – E2	IG SW ON	Coolant temp. 80°C (176°F)	0.2 – 1.0
STA – E1	Cranking		6 or more
IGT – E1	Idling		Pluse generation
ISCO – E1	IG SW ON		9 – 14
W – E1	No trouble ("CHECK" engine warning light off) and engine running		9 – 14
ACA – E1	IG SW ON	Air conditioning ON	0 – 3
ACT – E1	IG SW ON	Air conditioning ON	4.5 – 5.5
T – E1	IG SW ON	DLC1 TE1 – E1 not connected	9 – 14
	IG SW ON	DLC1 TE1 – E1 connected	0 – 3
NSW – E1 (A/T only)	IG SW ON	Park/neutral switch P or N range	0 – 3
	IG SW ON	Ex. Park/neutral switch P or N range	9 – 14
B/K – E1	Stop light SW ON (Brake pedal depressed)		7.5 – 14

PCME Terminals (M/T)

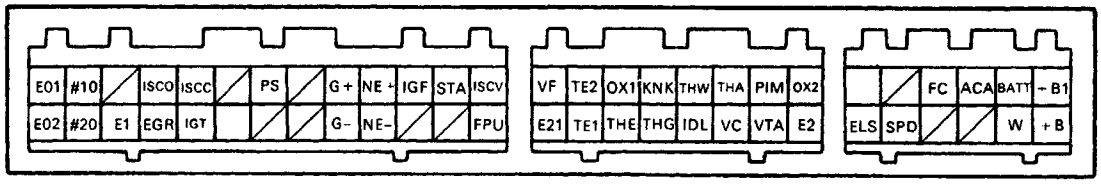

PCM E & T Terminals (A/T)

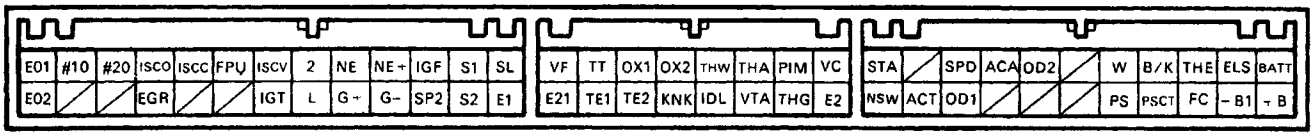

P01821
FI2796

V00959

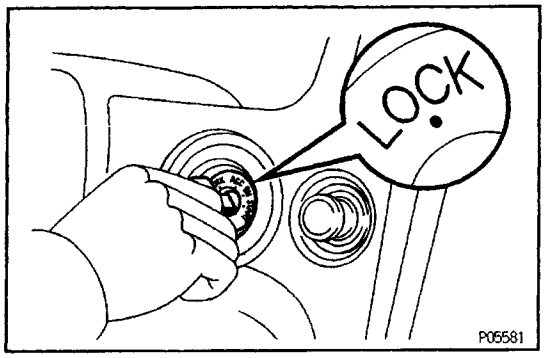

4. INSPECT RESISTANCE OF PCME (& T)

(a) Turn the ignition switch OFF.

(b) Disconnect the three connectors from the PCME (&T).

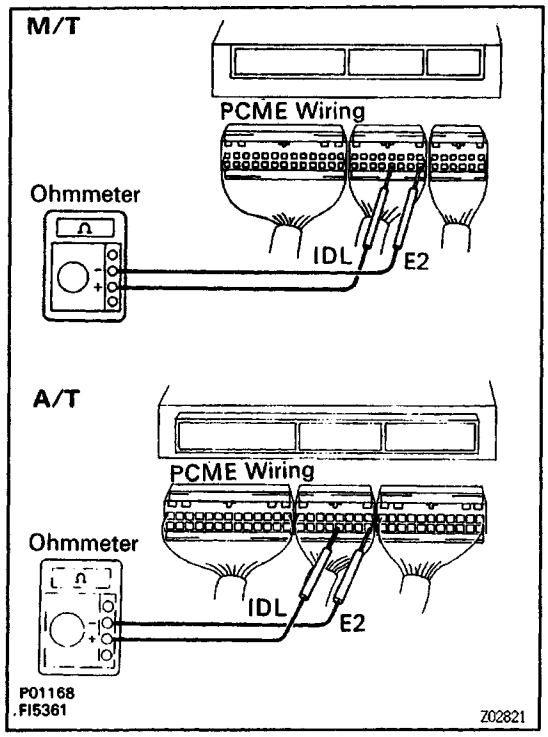

(c) Measure the resistance between each terminal of the wiring connectors.

NOTICE:

- **Do not touch the PCME (& T) terminals.**
- **The tester probe should be inserted in the wiring connector from the wiring side.**

Resistance of PCME (& T) Wiring Connectors

Terminals	Condition	STD resistance (Ω)
IDL – E2	Throttle valve open	Infinity
	Throttle valve fully closed (Throttle opener must be cancelled first)	2,300 or less
VTA – E2	Throttle valve fully open	2,000 – 10,200
	Throttle valve fully closed (Throttle opener must be cancelled first)	200 – 5,700
VC – E2	–	2,500 – 5,900
THA – E2	Intake air temp. 20°C (68°F)	2,000 – 3,000
THW – E2	Coolant temp. 80°C (176° F)	200 – 400
G+ – G–	Cold (–10°C (14°F) to 50°C (104°F))	185 – 275
	Hot (50°C (104°F) to 100°C (212°F))	240 – 325
NE+ – NE–	Cold (–10°C (14°F) to 50°C (104°F))	370 – 550
	Hot (50°C (104°F) to 100°C (212°F))	475 – 650
ISCC – +B ISCO – +B1	–	19.3 – 22.3

PCM E Terminals (M/T)

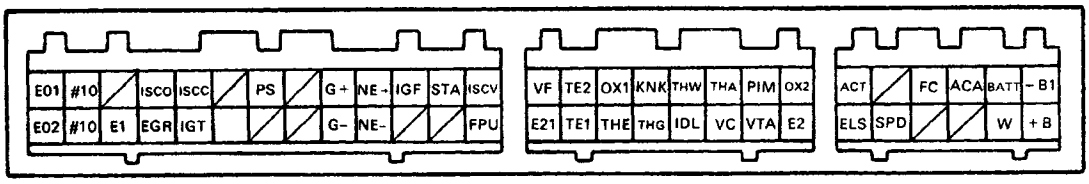

PCM E & T Terminals (A/T)

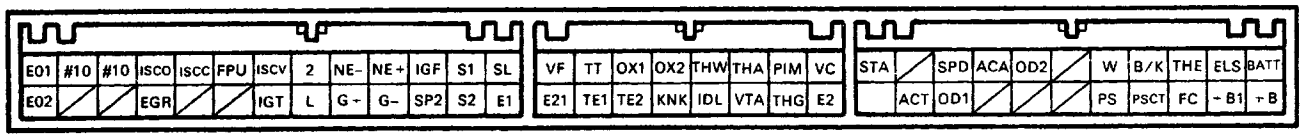

P01821
FI2796

PRECAUTION

1. Before working on the fuel system, disconnect the cable from negative (–) terminal of the battery.

HINT: Any diagnostic trouble code retained by the computer will be erased when the battery terminal is removed.

Therefore, if necessary, read the diagnosis before removing the terminal.

2. Do not smoke or work near an open flame when working on the fuel system.

3. Keep gasoline away from rubber or leather parts.

MAINTENANCE PRECAUTIONS

1. CHECK CORRECT ENGINE TUNE–UP

(See Tune–Up under Engine Mechanical)

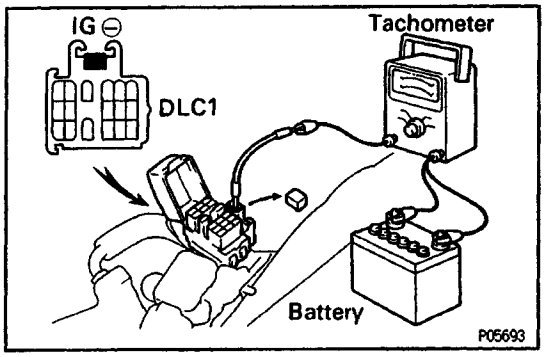

2. PRECAUTION WHEN CONNECTING GAUGE

(a) Use battery as the power source for the timing light, tachometer, etc.

(b) Connect the tester probe of a tachometer to the ter–minal IG(–) of the data link connector 1.

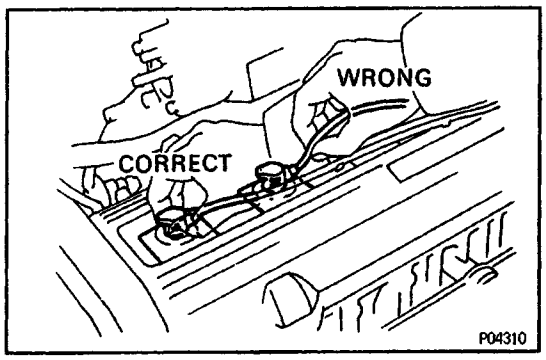

3. IN EVENT OF ENGINE MISFIRE, FOLLOWING PRECAUTIONS SHOULD BE TAKEN

(a) Check proper connection of battery terminals, etc.

(b) Handle high–tension cords carefully.

(c) After repair work, check that the ignition coil termi–nals and all other ignition system lines are reconne–cted securely.

(d) When cleaning the engine compartment, be especially careful to protect the electrical system from water.

4. PRECAUTIONS WHEN HANDLING OXYGEN SENSOR

(a) Do not allow oxygen sensor to drop or hit against an object.

(b) Do not allow the sensor to come into contact with water.

IF VEHICLE IS EQUIPPED WITH MOBILE RADIO SYSTEM (HAM, CB, ETC.)

The PCME (& T) has been designed so that it will not be affected by outside interference.

However, if your vehicle is equipped with a CB radio transceiver, etc. (even one with about 10 W output), it may, at times, have an affect upon PCME (& T) operation, especially if the antenna and feeder are installed nearby.

Therefore, observe the following precautions:

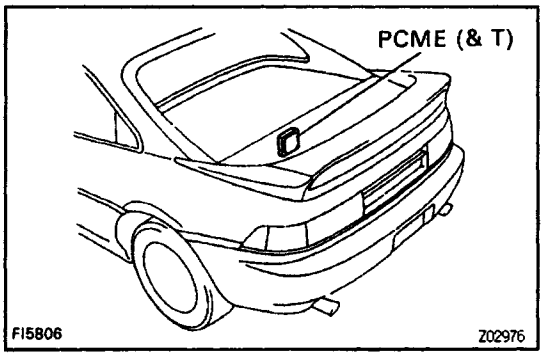

1. Install the antenna as far away as possible from the PCME (& T). The PCME (& T) is located on the partition panel into rear luggage compartment so the antenna should be installed at the rear side of the vehicle.
2. Keep the antenna feeder as far away as possible from the PCME (& T) wires–at lease 20 cm (7.87 in.)–and, especially, do not wind them together.
3. Check that the feeder and antenna are properly adjusted.
4. Do not equip your vehicle with a powerful mobile radio system.
5. Do not open the cover or the case of the PCME (& T) unless absolutely necessary. (If the IC terminals are touched, the IC may be destroyed by static electricity.)

EG0CM–01

AIR INDUCTION SYSTEM

1. Separation of the engine oil dipstick, oil filler cap, PCV hose, etc. may cause the engine to run out of turn.
2. Disconnection, looseness or cracks in the parts of the air induction system between the throttle body and cylinder head will allow air suction and cause the engine to run out of tune.

EG11W–01

ELECTRONIC CONTROL SYSTEM

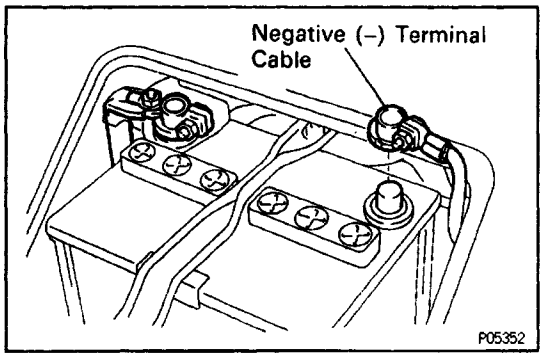

1. Before removing MPI wiring connectors, terminals, etc., first disconnect the power by either turning the ignition switch OFF or disconnecting the battery terminals.

   HINT: Always check the diagnostic trouble code before disconnecting the battery terminal.

2. When installing the battery, be especially careful not to incorrectly connect the positive (+) and negative (–) cables.
3. Do not permit parts to receive a severe impact during removal or installation. Handle all MPI parts carefully, especially the PCME (& T).
4. Do not be careless during troubleshooting as there are numerous transistor circuits and even slight terminal contact can further troubles.
5. Do not open the PCME (& T) cover.
6. When inspecting during rainy weather, take care to prevent entry of water. Also, when washing they engine compartment, prevent water from getting on the MPI parts and wiring connectors.
7. Parts should be replaced as an assembly.

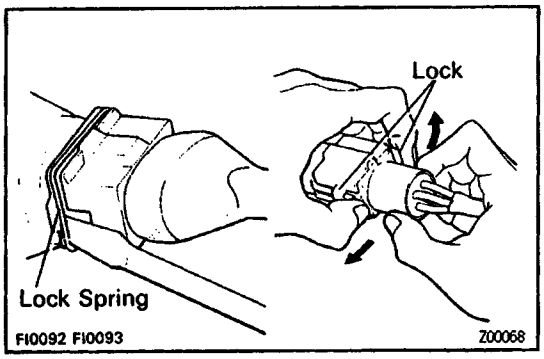

8. Care is required when pulling out and inserting wiring connectors.
   (a) Release the lock and pull out the connector, pulling on the connectors.

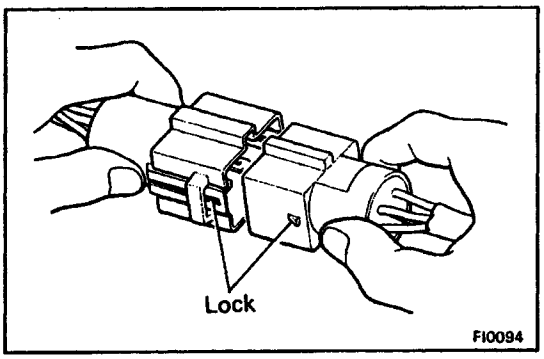

   (b) Fully insert the connector and check that it is locked.

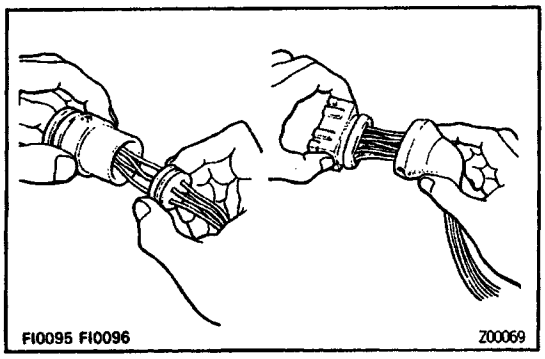

9. When inspecting a connector with a volt/ohmmeter.
   (a) Carefully take out the water–proofing rubber if it is a water–proof type connector.

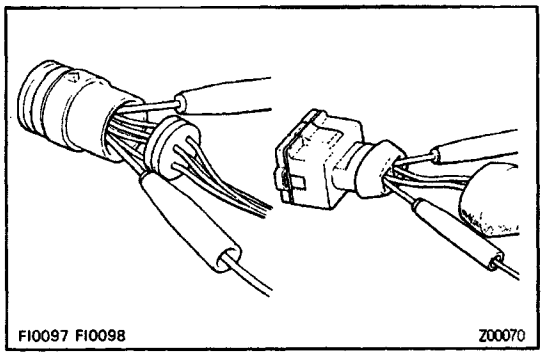

(b) Insert the test probe into the connector from wiring side when checking the continuity, amperage or voltage.
(c) Do not apply unnecessary force to the terminal.
(d) After checking, install the water–proofing rubber on the connector securely.

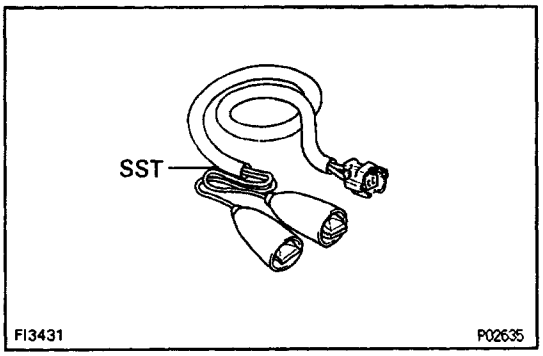

10. Use SST for inspection or test of the injector or its wiring connector.
SST 09842–30070

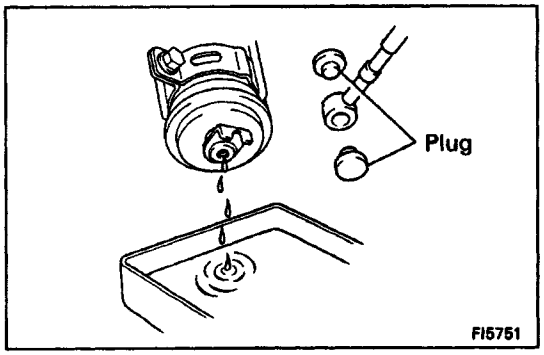

EG11X–01

FUEL SYSTEM

1. When disconnecting the high fuel pressure line, a large amount of gasoline will spill out, so observe the following procedures:
(a) Put a container under the connection.
(b) Slowly loosen the connection.
(c) Disconnect the connection.
(d) Plug the connection with a rubber plug.
2. When connecting the flare nut or union bolt on the high pressure pipe union, observe the following procedures:
(Union Bolt Type)
(a) Always use a new gasket.
(b) Tighten the union bolt by hand.
(c) Tighten the union bolt to the specified torque.
Torque: 29 N–m (300 kgf–cm, 22 ft–lbf)

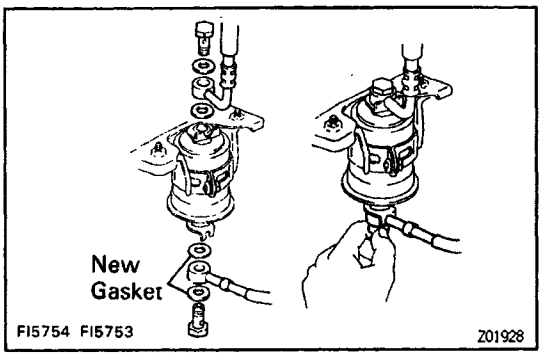

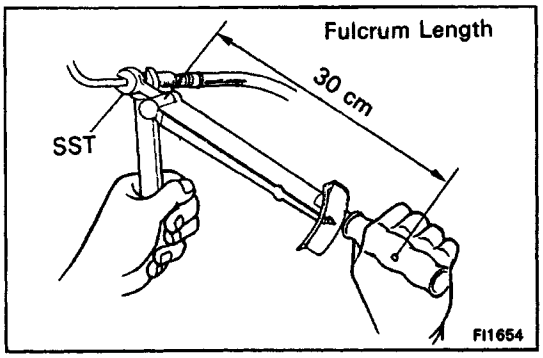

(Flare Nut Type)
(a) Apply a light coat of engine oil to the flare and tighten the flare nut by hand.
(b) Using SST, tighten the flare nut to the specified torque.
SST 09631 –22020
Torque: 30 N–m (310 kgf–cm, 22 ft–lbf)
HINT: Use a torque wrench with a fulcrum length of 30 cm (111.81 in.).

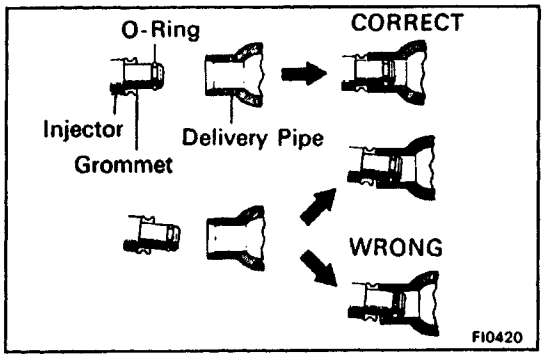

3. Observe the following precautions when removing and installing the injectors.
   (a) Never reuse the O–ring.
   (b) When placing a new O–ring on the injector, take care not to damage it in any way.
   (c) Coat a new O–ring with spindle oil or gasoline before installing –never use engine, gear or brake oil.

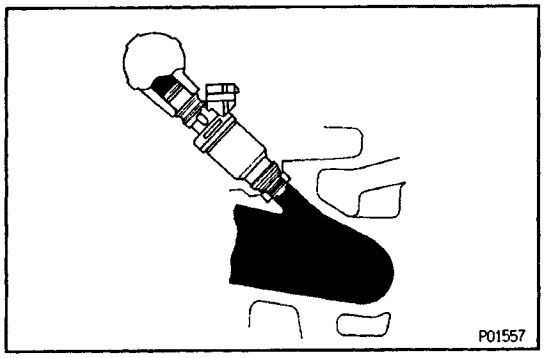

4. Install the injector– to delivery pipe and cylinder head as shown in the illustration.

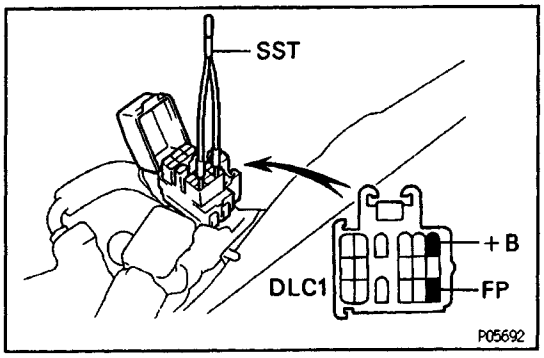

5. Check that there are no fuel leaks after performing any maintenance on the fuel system.
   (a) Using SST, connect terminals +B and FP of the data link connector 1.
   SST 09843–18020

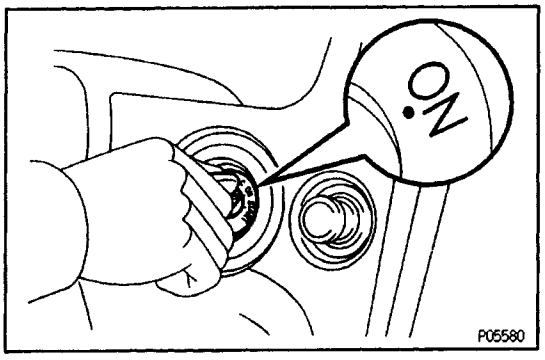

(b) Turn the ignition switch ON.
NOTICE: Do not start the engine.

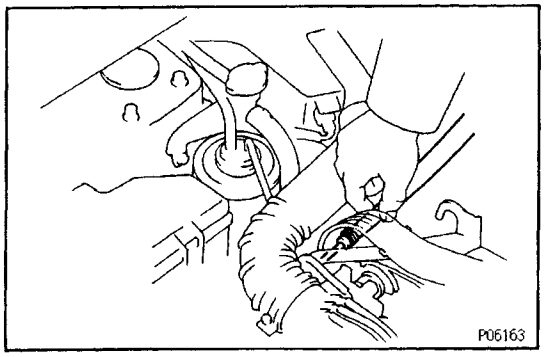

(c) When the fuel return hose is pinched, the pressure within high pressure line will rise to approx. 392 kPa (4kgf/cm^2, 57 psi). In this state, check to see that there are no leaks from any part of the fuel system.
NOTICE: Always pinch the hose, avoid bending as it may cause the hose to crack.

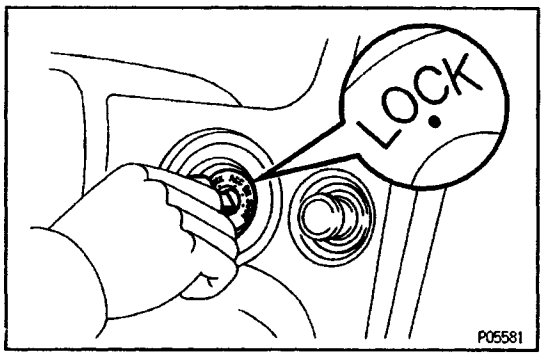

(d) Turn the ignition switch OFF.

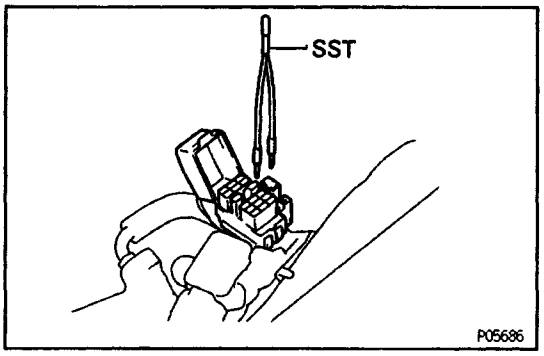

(e) Remove the SST from the data link connector 1.
SST 09843–18020

PREPARATION

EG0CF–03

SST (SPECIAL SERVICE TOOLS)

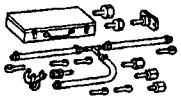	09266–41045 Injection Measuring Tool Set	
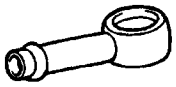	(09268–41080) No.6 Union	
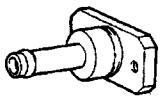	(09268–41090) No.7 Union	
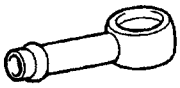	(90405–09015) No.1 Union	
	09268–45012 EFI Fuel Pressure Gauge	
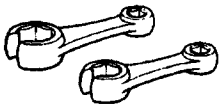	09631–22020 Power Steering Hose Nut 14 x 17 mm Wrench Set	Fuel line flare nut
	09842–30070 Wiring 'F' EFI Inspection	
	09843–18020 Diagnosis Check Wire	

EG0CG–01

RECOMMENDED TOOLS

	09082–00015 TOYOTA Electrical Tester	
	09200–00010 Engine Adjust Kit	
	09258–00030 Hose Plug set	Plug for the vacuum hose, fuel hose etc.

EGGCH–01

EQUIPMENT

Graduated cylinder	Injector
Carburetor cleaner	Throttle body
Sound scope	Injector
Tachometer	
Torque wrench	
Vacuum gauge	
Soft brush	Throttle body

SERVICE SPECIFICATIONS

EG163–01

SERVICE DATA

Fuel pressure regulator	Fuel pressure	at no vacuum	265 – 304 kPa (2.7 – 3.1 kgf/cm², 38 – 44 psi)
Fuel pump	Resistance		0.2 – 3.0 Ω
Injector	Resistance		Approx. 13.8 Ω
	Injection volume		49 – 59 cm³ (3.0 – 3.6 cu in.) per 15 sec.
	Difference between each cylinder		5 cm³ (0.3 cu in.) or less
	Fuel leakage		One drop or less per minute
Throttle body	Throttle body fully closed angle		6°
	Throttle opener setting speed		1,300 – 1,500 rpm (w/ Cooling fan OFF)
Throttle position sensor	Clearance between stop screw and lever	Terminal	Resistance
	0 mm (0 in.)	VTA – E2	0.2 – 5.7 kΩ
	0.50 mm (0.020 in.)	IDL – E2	2.3 kΩ or less
	0.70 mm (0.028 in.)	IDL – E2	Infinity
	Throttle valve fully open	VTA – E2	2.0 – 10.2 kΩ
	–	VC – E2	2.5 – 5.9 kΩ
IACV	Resistance	+B – ISCC or ISCO	19.3 – 22.3 Ω
ECTS	Resistance		10 – 20 kΩ at 20°C (–4°F) 4 – 7 kΩ at 0°C (32°F) 2 – 3 kΩ at 20°C (68°F) 0.9 – 1.3 kΩ at 40°C (104°F) 0.4 – 0.7 kΩ at 60°C (140°F) 0.2 – 0.4 kΩ at 80°C (176°F)
TATS	Resistance		10 – 20 kΩ at 20°C (–4°F) 4 – 7 kΩ at 0°C (32°F) 2 – 3 kΩ at 20°C (68°F) 0.9 – 1.3 kΩ at 40°C (104°F) 0.4 – 0.7 kΩ at 60°C (140°F) 0.2 – 0.4 kΩ at 80°C (176°F)
VSV (for Fuel pressure)	Resistance (Cold)		37 – 44 Ω
VSV (for EGR)	Resistance (Cold)		33 – 39 Ω
A/C idle–up valve	Resistance (Cold)		30 – 34 Ω
EGR function sensor (Calif. only)	Resistance		69 – 89 kΩ at 50°C (122°F) 11 – 15 kΩ at 100°C (212°F) 2 – 4 kΩ at 150°C (302°F)
Oxygen sensor	Heater coil resistance		5.1 – 6.3 Ω at 20°C (68°F)

PCME (& T)	Condition	Terminals	Voltage
	IG SW ON	+B–E1	9 – 14 V
	IG SW ON	+B1 – E1	9 – 14 V
	–	BATT – E1	9 – 14 V
	IG SW ON – Throttle valve open	IDL – E2	9 – 14 V
	IG SW ON – Throttle valve fully closed (Throttle opener must be cancelled first)	VTA – E2	0.3 – 0.8 V
	IG SW ON – Throttle valve fully open	VTA – E2	3.2 – 4.9 V
	IG SW ON	PIM – E2	3.3 – 3.9 V
	IG SW ON	VC – E2	4.5 – 5.5 V
	IG SW ON	#10 or #20 – E01	9 – 14 V
	IG SW ON	#10 or #20 – E02	9 – 14 V
	IG SW ON – Intake air temp. 20°C (68°F)	THA – E2	0.5 – 3.4 V
	IG SW ON – Coolant temp. 80°C (176°F)	THW – E2	0.2 – 1.0 V
	Cranking	STA – E1	6 V or more
	Idling	IGT – E1	Pulse generation
	IG SW ON	ISCO – E1	9 – 14 V
	No trouble ("CHECK" engine warning light off) and engine running	W – E1	9 – 14 V
	IG SW ON – Air conditioning ON	ACA – E2	0 – 3 V
	IG SW ON – Air conditioning ON	ACT – E2	4.5 – 5.5 V
	IG SW ON – DLC1 TE1 – E1 not connected	TE1 – E1	9 – 14 V
	IG SW ON – DLC1 TE1 – E1 connected	TE1 – E1	0 – 3 V
	IG SW ON – Park/neutral switch P or N range	NSW – E1 (A/T only)	0 – 3 V
	IG SW ON – EX. Park/neutral switch P or N range	NSW – E1 (A/T only)	9 – 14 V
	Stop light SW ON (Brake pedal depressed)	B/K – E1	7.5 – 14 V

PCM E (& T)	Condition	Terminals	Resistance
	Throttle valve open	IDL – E2	Infinity
	Throttle valve fully closed	IDL – E2	2,300 Ω or less
	(Throttle opener must be cancelled first)		
	Throttle valve fully open	VTA – E2	2,000 – 10,200 Ω
	Throttle valve fully closed	VTA – E2	200 – 5,700 Ω
	(Throttle opener must be cancelled first)		
	–	VC – E2	2,500 – 5,900 Ω
	Intake air temp. 20°C (68°F)	THA – E2	2,000 – 3,000 Ω
	Coolant temp. 80°C (176°F)	THW – E2	200 – 400 Ω
	Cold (–10°C (14°F) to 50°C (104°F))	G+ – G–	185 – 275 Ω
	Hot (50°C (104°F) to 100°C (212°F))	G+ – G–	240 – 325 Ω
	Cold (–10°C (14°F) to 50°C (104°F))	NE+ – NE–	370 – 550 Ω
	Hot (50°C (104°F) to 100°C (212°F))	NE+ – NE–	475 – 650 Ω
	–	+B or +B1 – ISCC or ISCO	19.3 – 22.3 Ω
Fuel cut rpm	Fuel return rpm		1,500 rpm

EG0EE–03

TORQUE SPECIFICATIONS

Part tightened	N·m	kgf·cm	ft·lbf
Fuel line (Union bolt type)	29	300	22
Fuel line (Flare nut type)	30	310	22
Drain plug x Fuel tank	13	130	9
Fuel pump x Fuel tank	3.4	35	30 in.·lbf
Fuel sender gauge x Fuel tank	1.5	15	13 in.·lbf
Fuel evaporation vent tube x Fuel tank	1.5	15	13 in.·lbf
Fuel tank filler pipe x Fuel tank	3.4	35	30 in.·lbf
Fuel tank band x Body	29	300	22
No.2 center floor crossmember x Body	29	300	22
Fuel pressure regulator x Delivery pipe	5.4	55	48 in.·lbf
Fuel return pipe x Fuel pressure regulator	19	195	14
Delivery pipe x Cylinder head	13	130	9
Fuel inlet pipe x Delivery pipe	34	350	25
Air intake chamber stay x Intake manifold	42	425	31
Air intake chamber stay x Cylinder head	42	425	31
Throttle body x Intake manifold	19	195	14

SUB–OXYGEN SENSOR (Calif.)

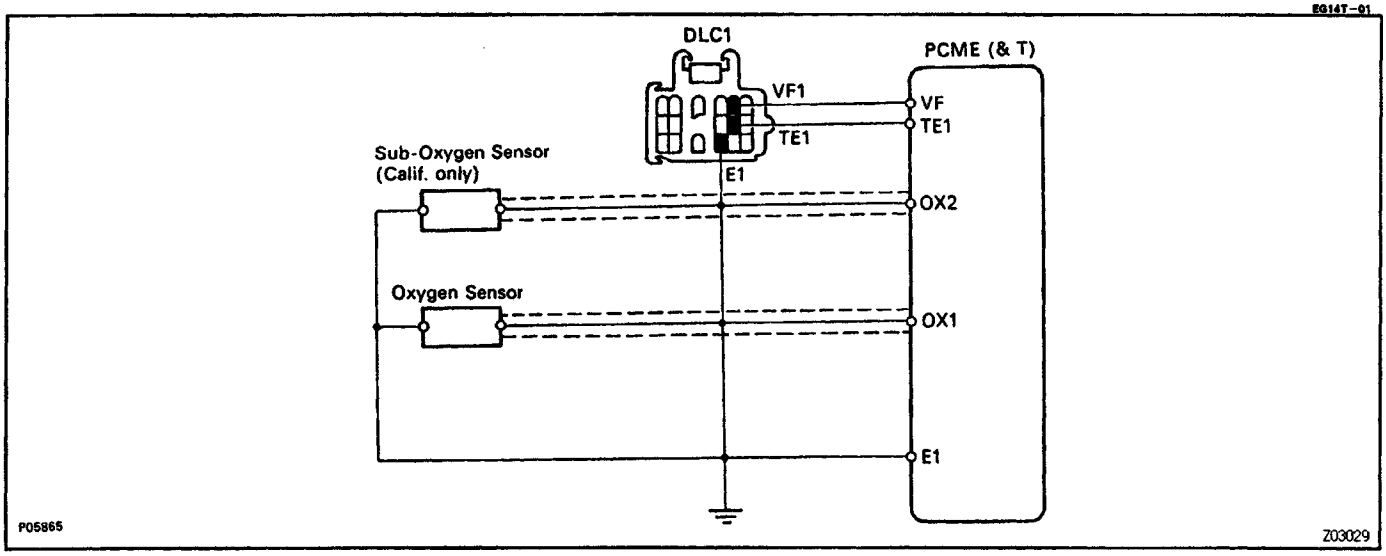

SUB–OXYGEN SENSOR INSPECTION EG0E7–02

INSPECT SUB–OXYGEN SENSOR

HINT: Inspect only when code No.27 is displayed.

(a) Cancel the diagnostic code. (See Diagnosis System)

(b) Warm up the engine until it reaches normal operating temperature.

(c) (M/T)

Drive for 5 minutes or more at a speed less than 80 km/h (50 mph) in 4th or 5th gear.

(A/T)

Drive for 5 minutes or more at a speed less than 80 km/h (50 mph) in D range.

(d) Following the conditions in step (c), fully depress on the accelerator pedal for 2 seconds or more.

(e) Stop the vehicle and turn the ignition switch OFF.

(f) Carry out steps (b), (c) and (d) again to test acceleration.

If code No.27 appears again, check the sub–oxygen sensor circuit. If the circuit is normal, replace the sub –oxygen sensor.

THROTTLE BODY

EG13C–01

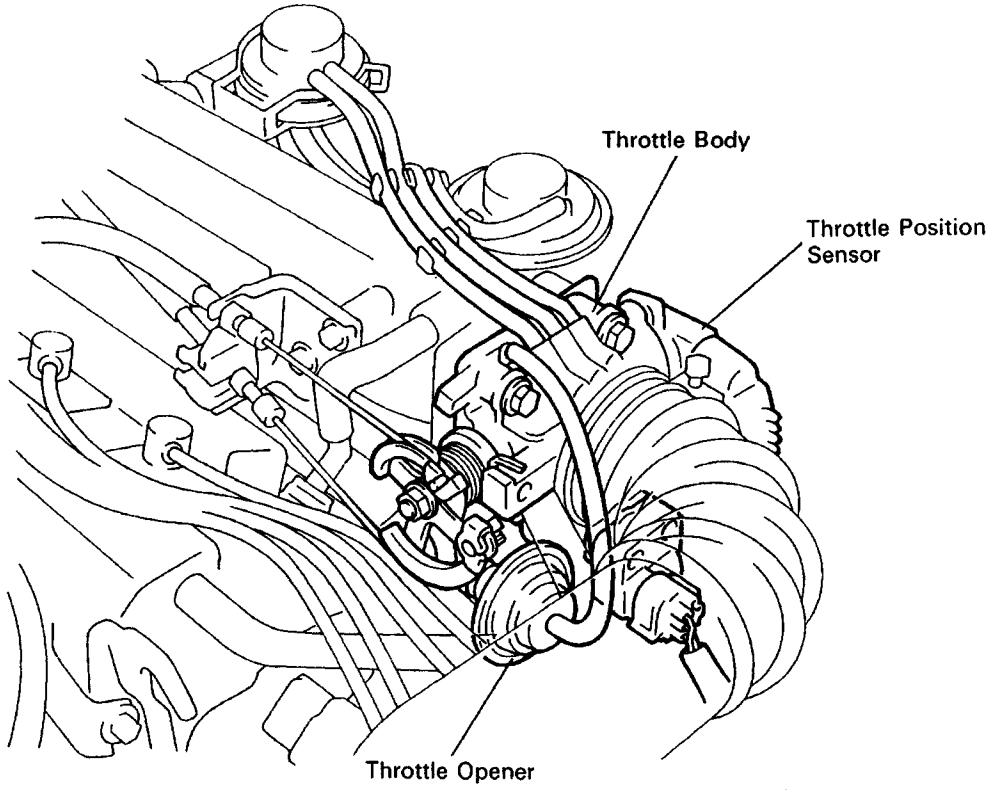

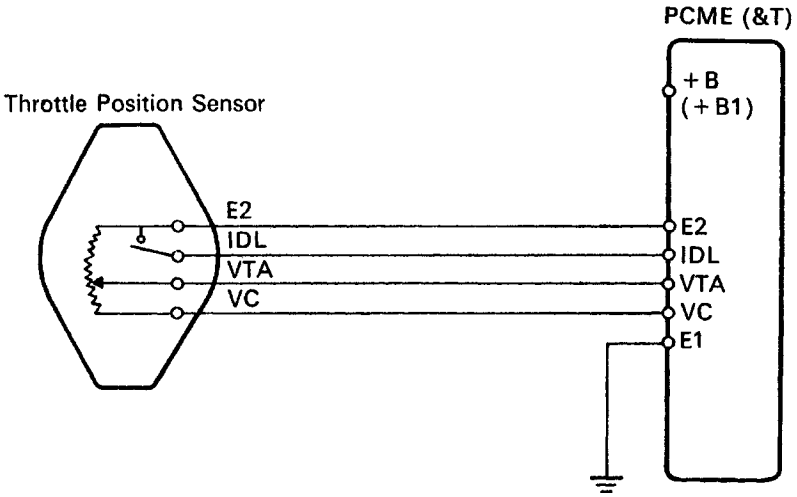

P06091
FI1366

Z02936

EG13E–01

ON–VEHICLE INPSECTION

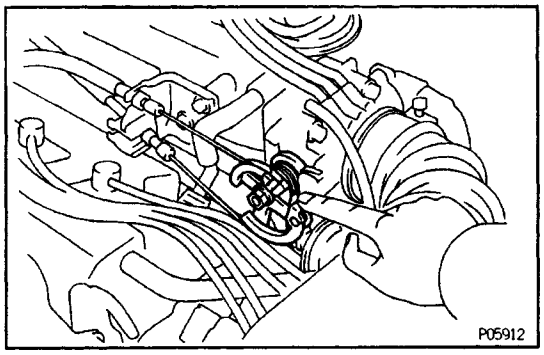

1. INSPECT THROTTLE BODY

(a) Check that the throttle linkage moves smoothly.

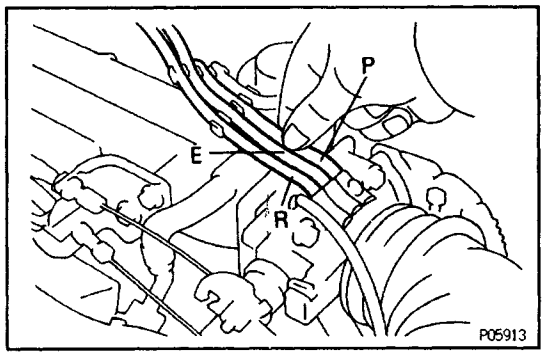

(b) Check the vacuum at each port.
Start the engine.
Check the vacuum with your finger.

Port name	At idle	Other than idle
P	No vacuum	Vacuum
E	No vacuum	Vacuum
R	No vacuum	No vacuum

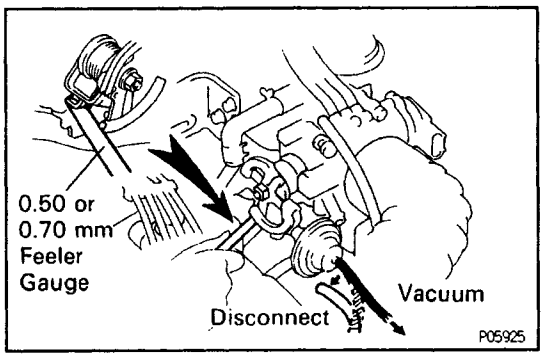

2. INSPECT THROTTLE POSITION SENSOR

(a) Disconnect the sensor connector.
(b) Disconnect the vacuum hose from the throttle opener.
(c) Apply vacuum to the throttle opener.
(d) Insert a feeler gauge between the throttle stop screw and stop lever.

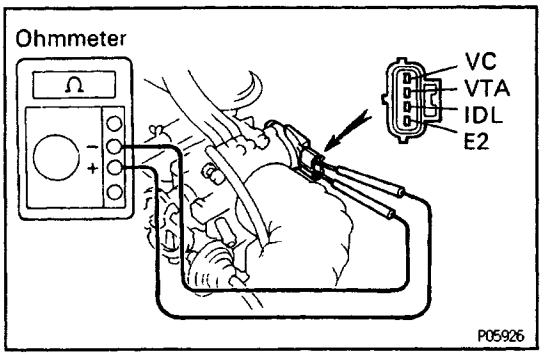

(e) Using an ohmmeter, measure the resistance between each terminal.

Clearance between lever and stop screw	Between terminals	Resistance
0 mm (0 in.)	VTA – E2	0.2 – 5.7 kΩ
0.50 mm (0.020 in.)	1DL – E2	2.3 kΩ or less
0.70 mm (0.028 in.)	IDL – E2	Infinity
Throttle valve fully open	VTA – E2	2.0 – 10.2 kΩ
–	VC – E2	2.5 – 5.9 kΩ

(f) Reconnect the vacuum hose to the throttle opener.
(g) Reconnect the sensor connector.

3. INSPECT AND ADJUST THROTTLE OPENER

A. Warm up engine

Allow the engine to warm up to normal operating temperature.

B. Connect tachometer

(See step 2 in Ignition Timing Inspection and Adjustment)

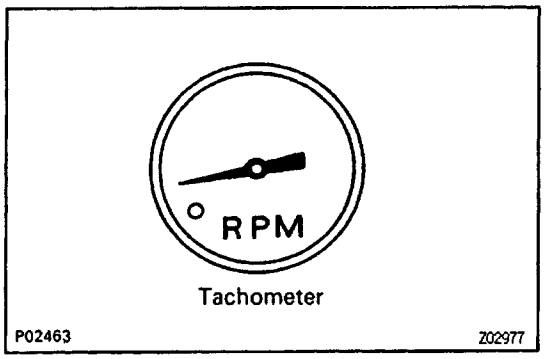

C. Check idle speed

Idle speed:

750 ± 50 rpm for USA M/T

700 ± 50 rpm for USA A/T

850 ± 50 rpm for CANADA M/T

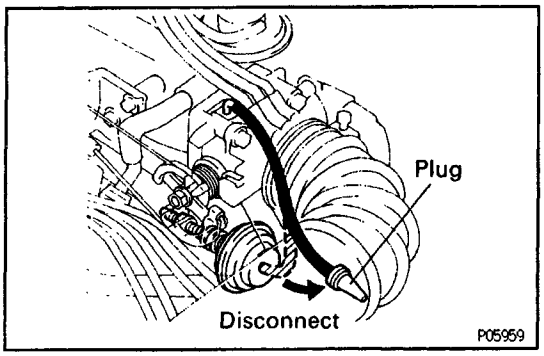

D. Check and adjust throttle opener setting speed

(a) Disconnect the vacuum hose from the throttle opener, and plug the hose end.

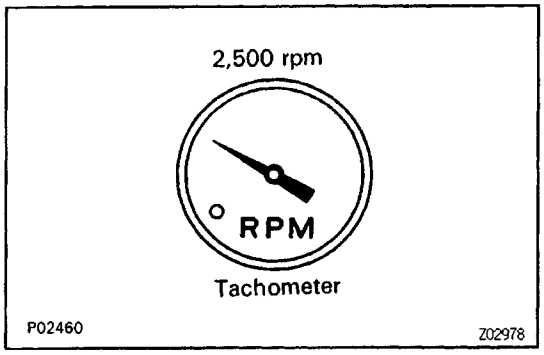

(b) Maintain the engine at 2,500 rpm.

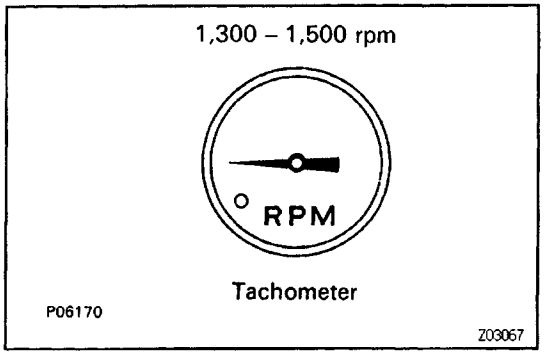

(c) Release the throttle valve.

(d) Check that the throttle opener is set.

Throttle opener setting speed:

1,300 – 1,500 rpm (w/ Cooling fan OFF)

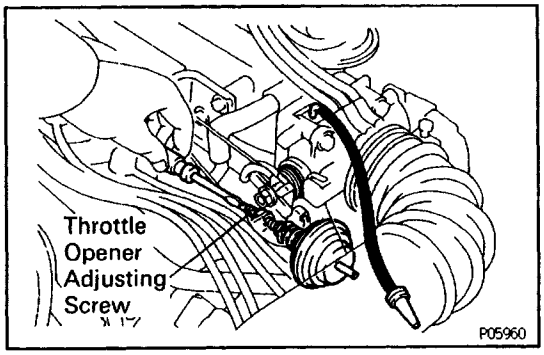

(e) Adjust the throttle opener setting speed by turning the throttle opener adjusting screw.

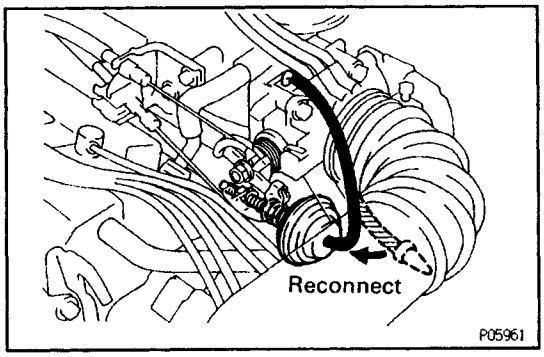

(f) Reconnect the vacuum hose to the throttle opener.

E. Disconnect tachometer

EG13G–01

COMPONENTS FOR REMOVAL AND INSTALLATION

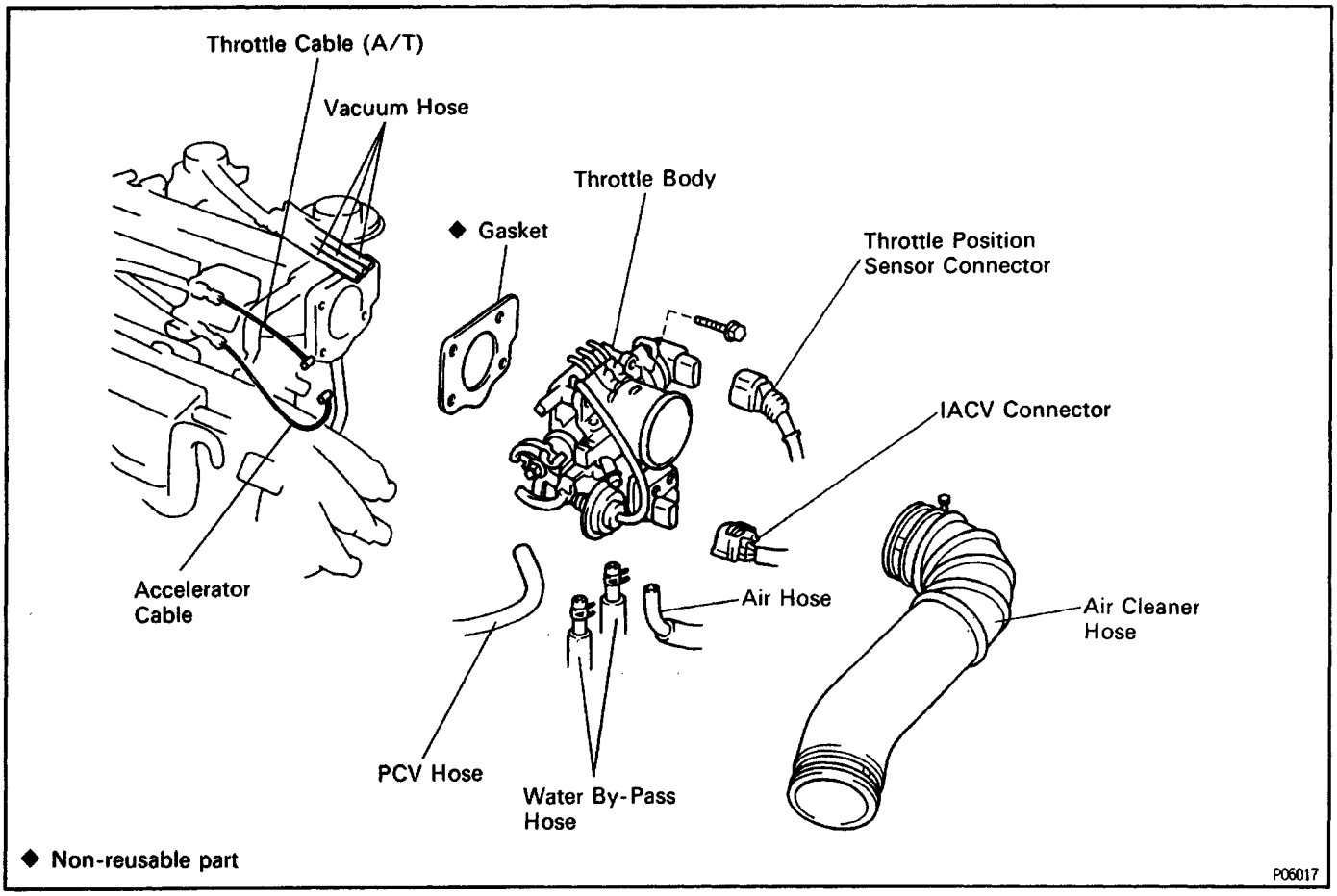

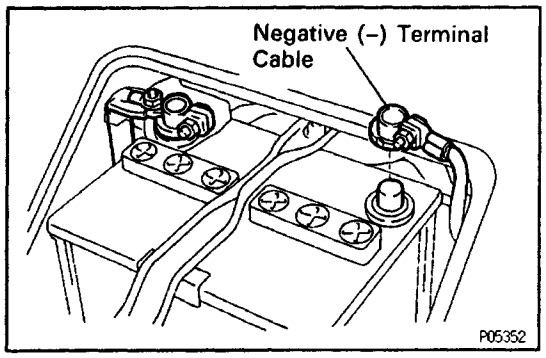

EG00G–03

THROTTLE BODY REMOVAL

(See Components for Removal and Installation)

1. DISCONNECT CABLE FROM NEGATIVE TERMINAL OF BATTERY

CAUTION: Turn the ignition switch to 'LOCK'. Disconnect the negative terminal from the battery. Wait at least 20 seconds before proceeding with work.

2. DRAIN ENGINE COOLANT

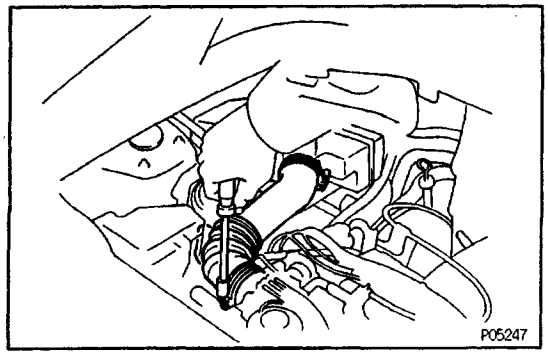

3. REMOVE AIR CLEANER HOSE

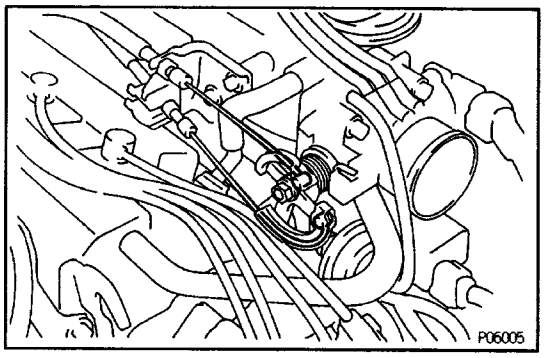

4. DISCONNECT ACCELERATOR CABLE FROM THROTTLE BODY

5. (A/T)
DISCONNECT THROTTLE CABLE FROM THROTTLE BODY

6. REMOVE THROTTLE BODY

(a) Disconnect the following connector:
- Throttle position sensor connector
- IACV connector

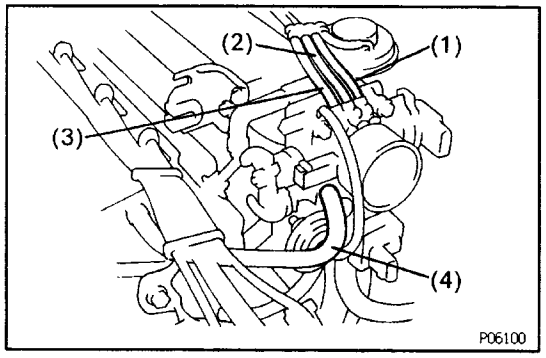

(b) Disconnect the following hoses:
(1) Vacuum hose (from upper port of TVS) from port ”P” of throttle body
(2) Vacuum hose (from port ”Q” of EGR vacuum modulator) from port ”E” of throttle body
(3) Vacuum hose (from port ”R” of EGR vacuum modulator) from port ”R” of throttle body
(4) PCV hose (from cylinder head) from throttle body

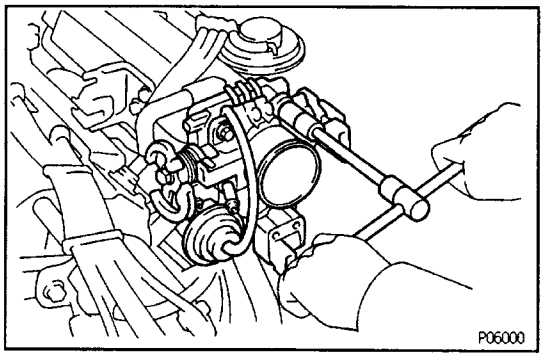

(c) Remove the four bolts, and disconnect the throttle body from the intake manifold.
(d) Remove the throttle body gasket.

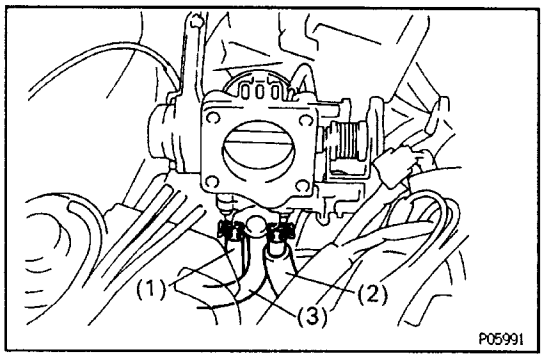

(e) Disconnect the following hoses from the throttle body, and remove the throttle body:
(1) Water by–pass hose (from water outlet)
(2) Water by–pass hose (from water by–pass pipe)
(3) Air hose (from A/C idle–up valve)

EG0DH–03

THROTTLE BODY INSPECTION

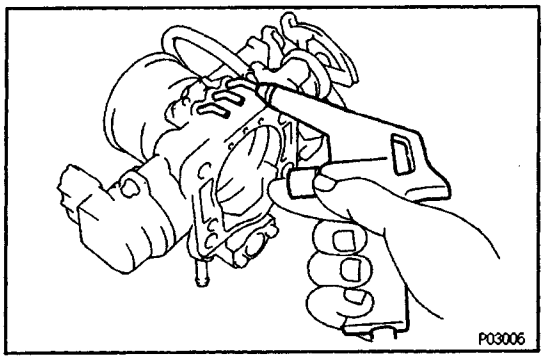

1. CLEAN THROTTLE BODY

(a) Using a soft brush and carburetor cleaner, clean the cast parts.

(b) Using compressed air, clean ail the passanges and apertures.

NOTICE: To prevent deterioration, do not clean the thr–ottle position sensor.

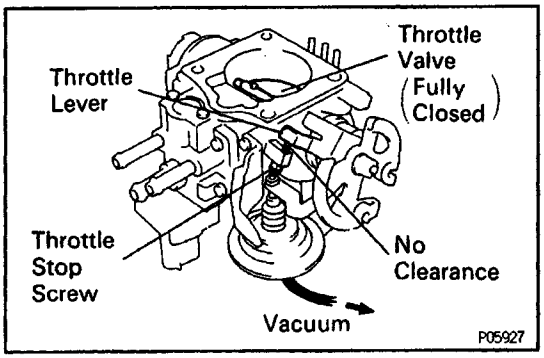

2. DISCONNECT VACUUM HOSE FROM THROTTLE OPENER

3. INSPECT THROTTLE VALVE

(a) Apply vacuum to the throttle opener.

(b) Check that there is no clearance between the throttle stop screw and throttle lever when the throttle valve is fully closed.

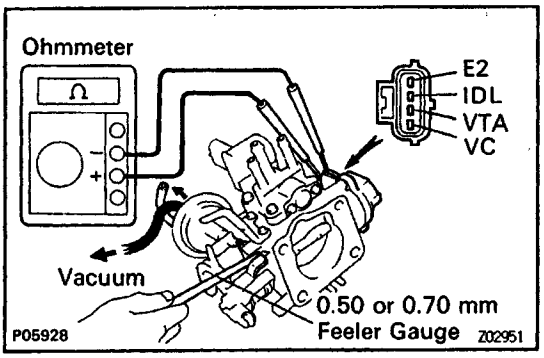

4. INSPECT THROTTLE POSITION SENSOR

(a) Apply vacuum to the throttle opener.

(b) Insert a feeler gauge between the throttle stop screw and stop levee.

(c) Using an ohmmeter, measure the resistance between each terminal.

Clearance between lever and stop screw	Between terminals	Resistance
0 mm (0 in.)	VTA – E2	0.2 – 5.7 kΩ
0.50 mm (0.020 in.)	IDL – E2	2.3 kΩ or less
0.70 mm (0.028 in.)	IDL – E2	Infinity
Throttle valve fully open	VTA – E2	2.0 – 10.2 kΩ
–	VC – E2	2.5 – 5.9 kΩ

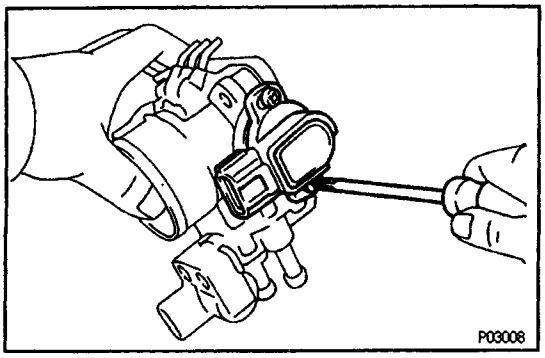

5. IF NECESSARY, ADJUST THROTTLE POSITION SENSOR

(a) Loosen the two set screws of the sensor.

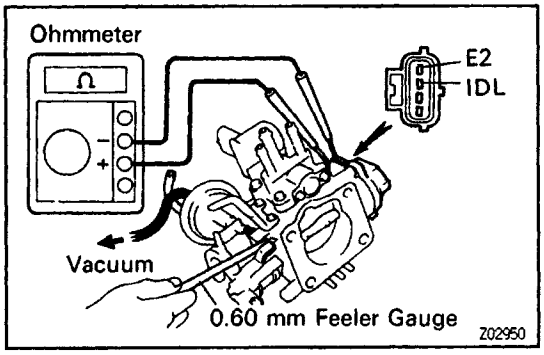

(b) Apply vacuum to the throttle opener.
(c) Insert a 0.60 mm (0.024 in.) feeler gauge between the throttle stop screw and stop lever.
(d) Connect the test probe of an ohmmeter to the terminals IDL and E2 of the sensor.

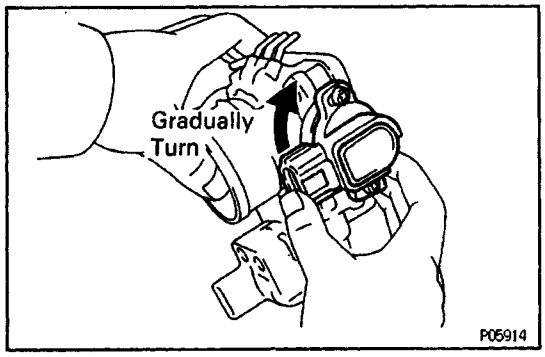

(e) Gradually turn the sensor clockwise until the ohmmeter deflects, and secure it with the two set screws.

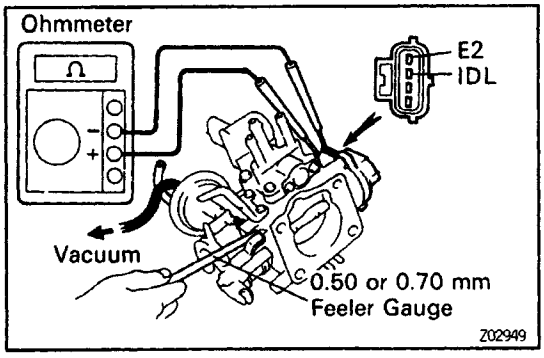

(f) Recheck the continuity between terminals IDL and E2.

Clearance between fever and stop screw	Continuity (IDL – E2)
0.50 mm (0.020 in.)	**Continuity**
0.70 mm (0.028 in.)	**No continuity**

EG13K–01

THROTTLE BODY INSTALLATION

(See Components for Removal and Installation)

1. INSTALL THROTTLE BODY

(a) Connect the following hoses to the throttle body:

(1) Water by–pass hose (from water outlet)
(2) Water by–pass hose (from water by–pass pipe)
(3) Air hose (from A/C idle–up valve)

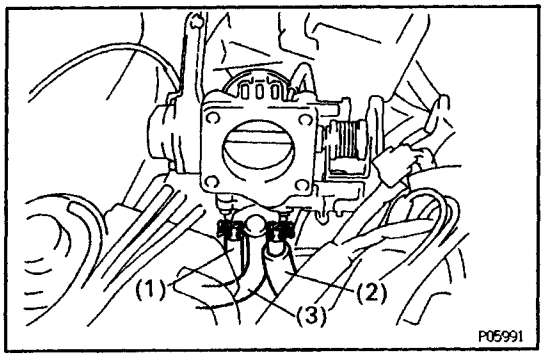

(b) Install a new gasket on the throttle body, facing thel protrusion downward.

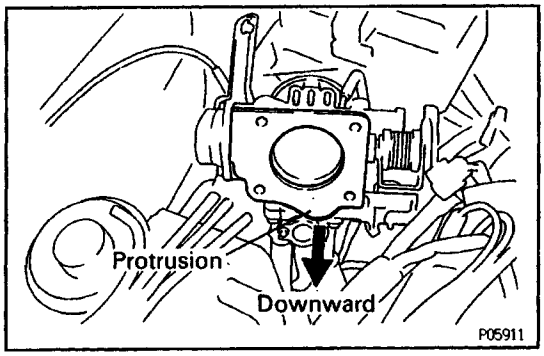

(c) Install the throttle body with the four bolts.

Torque: 19 N–m (195 kgf–cm, 14 ft–lbf)

HINT: Different bolt lengths are used for the upper and lower sides.

Bolt length:

45 mm (1.77 in.) for upper side
55 mm (2.17 in.) for lower side

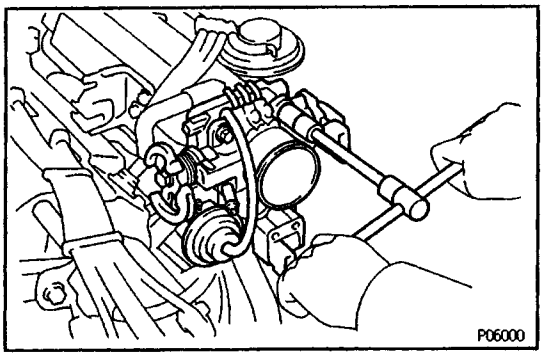

(d) Connect the following hoses:

(1) Vacuum hose (from upper port of TVS) to port ”P” of throttle body
(2) Vacuum hose (from port ”Q” of EGR vacuum modulator) to port ”E” of throttle body
(3) Vacuum hose (from port ”R” of EGR vacuum modulator) to port ”R” of throttle body
(4) PCV hose (from cylinder head) to throttle body

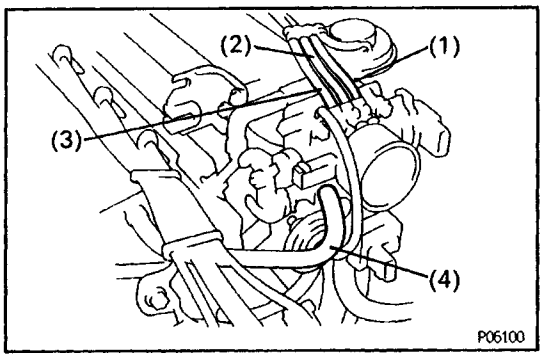

(e) Reconnect the following connector:

- Throttle position sensor connector
- IACV connector

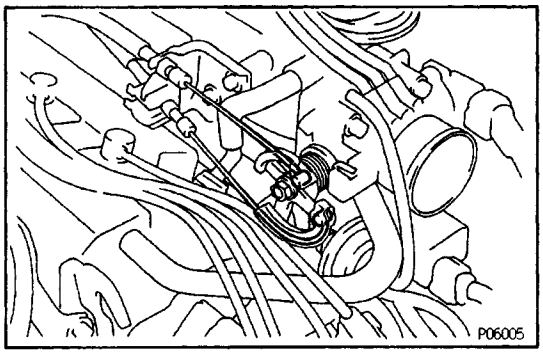

2. CONNECT ACCELERATOR CABLE TO THROTTLE BODY

3. (A/T)
CONNECT THROTTLE CABLE TO THROTTLE BODY

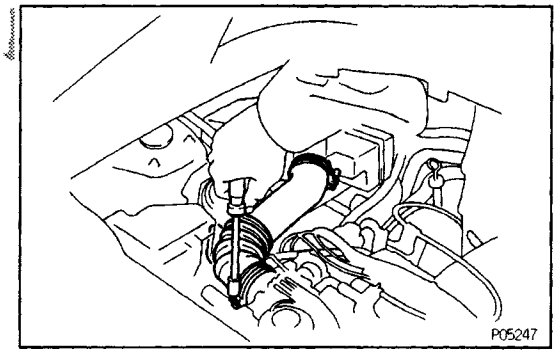

4. INSTALL AIR CLEANER HOSE

5. FILL WITH ENGINE COOLANT

6. CONNECT CABLE TO NEGATIVE TERMINAL OF BATTERY

TROUBLESHOOTING WITH VOLT OHMMETER

EG129–01

HINT:

- The following troubleshooting procedures are designed for inspection of each separate system, and therefore the actual procedure may vary somewhat. However, troubleshooting should be performed while referring to the inspection methods described in this manual.
- Before beginning inspection, it is best to first make a simple check of the fuses, H–fuses, fusible link and the condition of the connectors.
- The following troubleshooting procedures are based on the supposition that the trouble lies in either a short or open circuit within the computer.
- If engine trouble occurs even though proper operating voltage is detected in the computer connector, then it can be assumed that the PCME(& T) is faulty and should be replaced.

EG128–01

FUSES, H– FUSES AND FUSIBLE LINK LOCATION

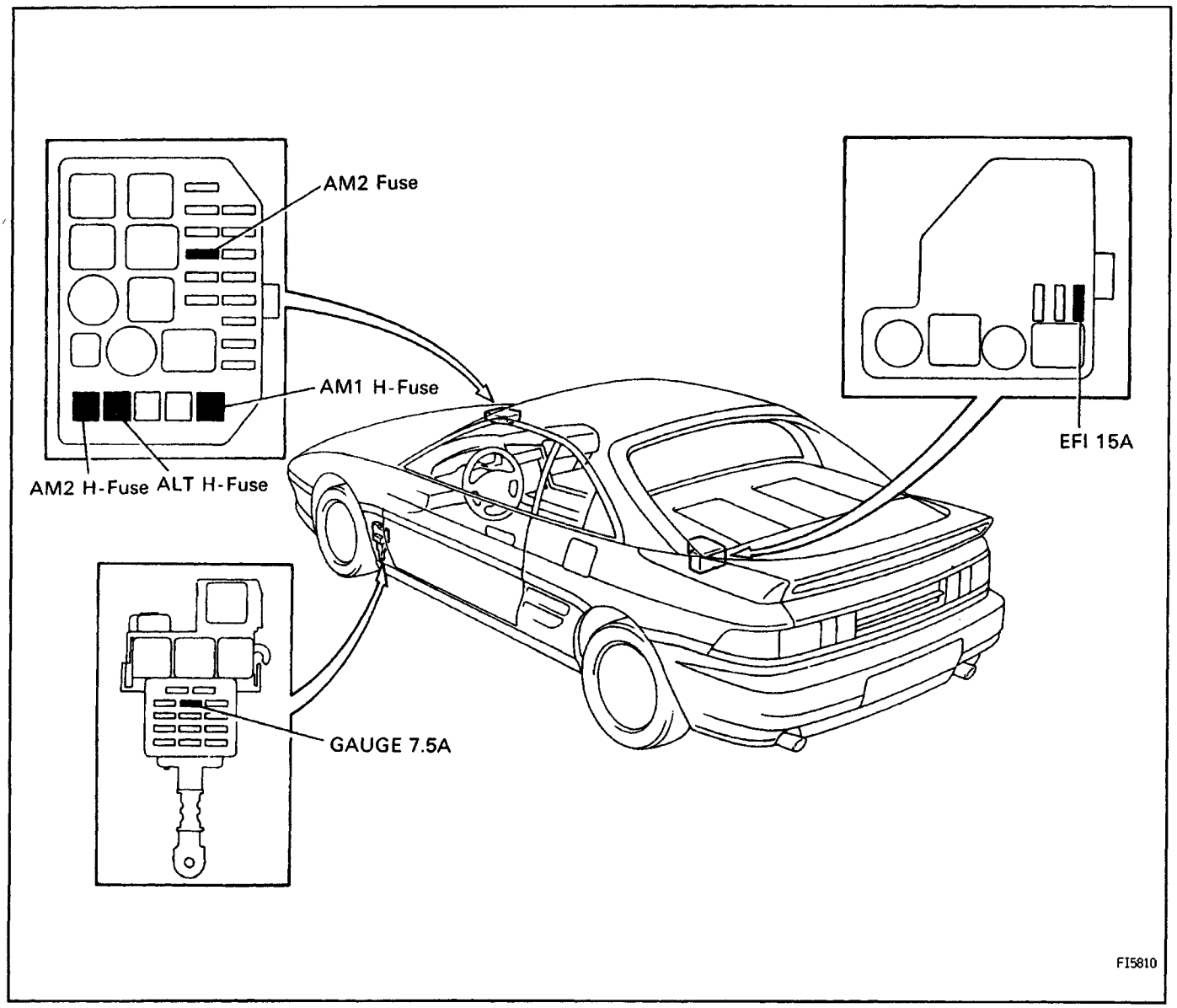

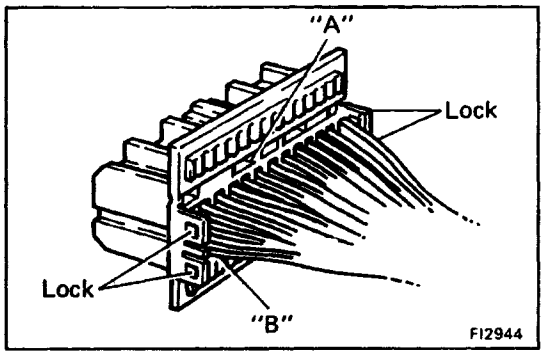

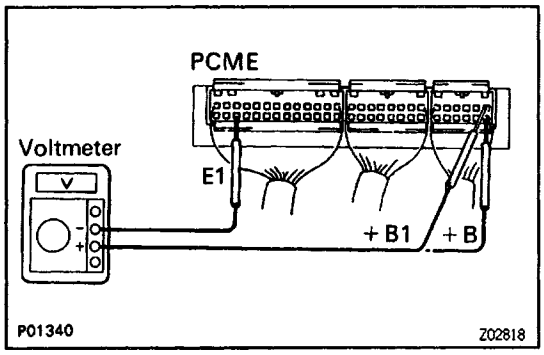

MPI SYSTEM CHECK PROCEDURE (M/T)

PREPARATION

(a) Disconnect the connectors from the PCME.

(b) Remove the locks as shown in the illustration so that the tester probe(s) can easily come in.

NOTICE: Pay attention to sections "A' and 'B' in the illustration which can be easily broken.

(c) Reconnect the connectors to the PCME.

HINT:

- Perform all voltage measurements with the connectors connected.
- Verify that the battery voltage is 11 V or more when the ignition switch is in the "ON" position.

Using a voltmeter with high impedance (10 kΩ/V minimum), measure the voltage at each terminal of the wiring connectors.

PCME Terminals (M/T)

Symbol	Terminal Name	Symbol	Terminal Name	Symbol	Terminal Name
E01	POWER GROUND	NE +	DISTRIBUTOR	THA	INTAKE AIR TEMP. SENSOR
E02	POWER GROUND	NE –	DISTRIBUTOR	VC	MAP THROTTLE POSITION SENSOR
#10	INJECTOR	IGF	IGNITER	PIM	MAP
#20	INJECTOR		–	VTA	THROTTLE POSITION SENSOR
	–	STA	STARTER RELAY	*OX2	SUB–OXYGEN SENSOR
E1	ENGINE GROUND		–	E2	SENSOR GROUND
ISCO	IDLE AIR CONTROL VALVE	ISCV	A/C IDLE–UP VSV	ACT	A/C AMPLIFIER
EGR	EG R VSV	FPU	FUEL PRESSURE VSV	ELS	TAILLIGHT RELAY DEFOGGER SWITCH
ISCC	IDLE AIR CONTROL VALVE	VF	DLC1		
IGT	IGNITER	E21	SENSOR GROUND	SPD	VSPG
	–	TE2	DLC1	FC	CIRCUIT OPENING RELAY
	–	TE1	DLC1		–
PSCT	PS CONTROL MODULE	OX1	MAIN OXYGEN SENSOR	ACA	A/C AMPLIFIER
PS	PS CONTROL MODULE	THE	EVAPORATOR TEMP. SENSOR		–
	–	KNK	KNOCK SENSOR	BATT	BATTERY
	DISTRIBUTOR	*THG	EGR FUNCTION SENSOR	W	WARNING LIGHT
G +		THW	ECTS	+B1	MPI MAIN RELAY
G –	DISTRIBUTOR	IDL	THROTTLE POSITION SENSOR	+B	MPI MAIN RELAY

*Calif. only

PCME Terminals

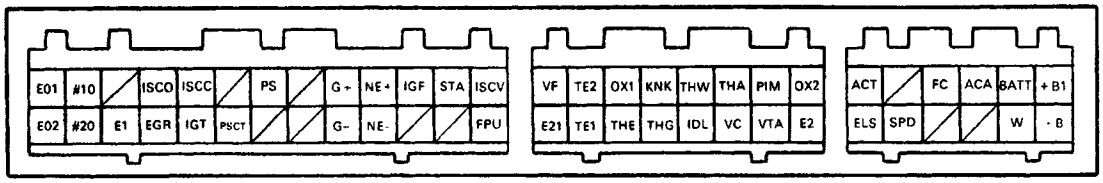

V00947

PCME Wiring Connectors Voltage (M/T)

No.	Terminals	Condition		STD voltage (V)	See page
1	+B + B1 – E1	IG SW ON		9 – 14	EG2–220
2	BATT – E1	–		9 – 14	EG2–221
3	IDL – E2	IG SW ON	Throttle valve open	9 – 14	EG2–222
	VC – E2		–	4.5 – 5.5	
	VTA – E2		Throttle valve fully closed (Throttle opener must be cancelled first)	0.3 – 0.8	
			Throttle valve fully open	3.2 – 4.9	
4	PIM – E2	IG SW ON		3.3 – 3.9	EG2–224
	VC – E2			4.5 – 5.5	
5	#10 – E01 #20 – E02			9 – 14	EG2–225
6	THA – E2	IG SW ON	Intake air temp. 20°C (68°F)	0.5 – 3.4	EG2–226
7	THW – E2		Coolant temp. 80°C (176°F)	0.2 – 1.0	EG2–227
8	STA – E1	Cranking		6 or more	EG2–228
9	IGT – E1	Idling		Pulse generation	EG2–229
10	ISCO – E1	IG SW ON		8 – 14	EG2–230
11	W – E1	No trouble (”CHECK” engine warning light off) and engine running		9 – 14	EG2–231

PCME Terminals

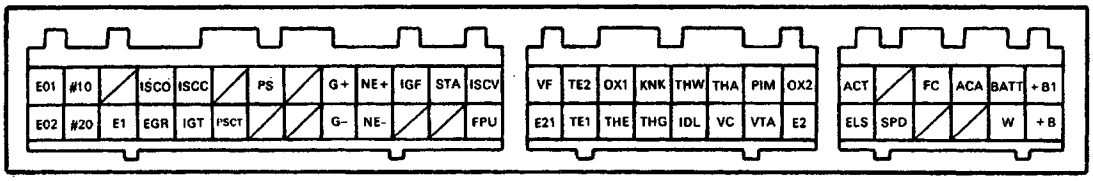

P01821

No.	Terminals	Trouble	Condition	STD voltage
1	+B + B1 –E1	No voltage	IG SW ON	9–14V

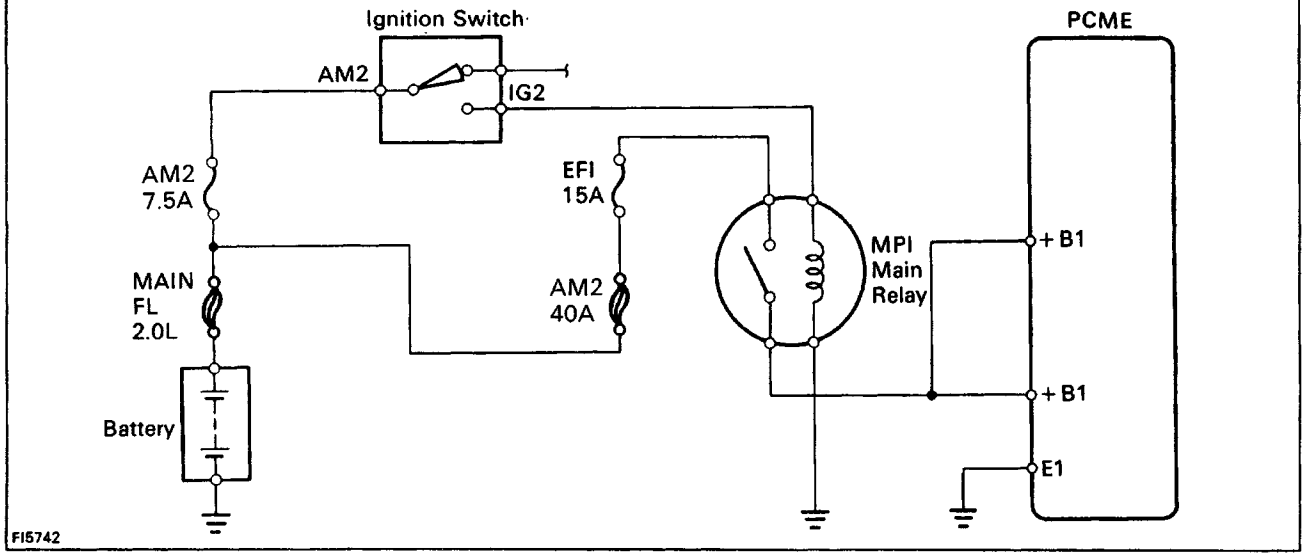

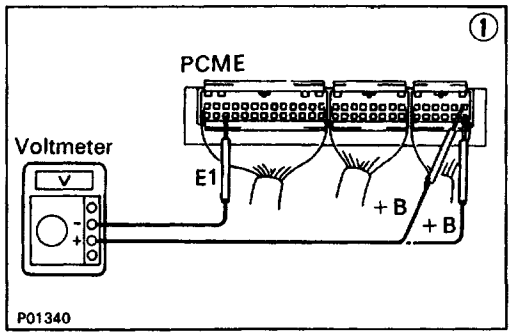

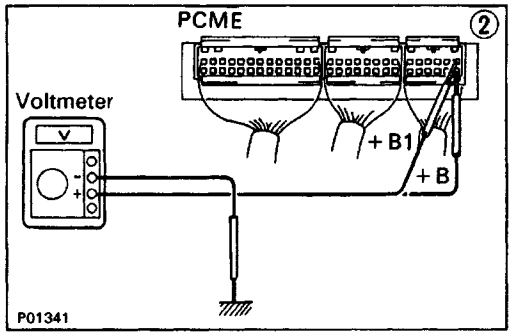

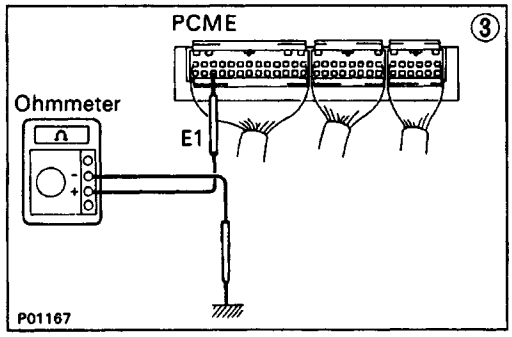

(1) There is no voltage between PCME terminals +B or +B1 and E1 **(IG SW ON)**

↓

(2) Check that there is voltage between PCME terminal +B or +B1 and body ground. **(IG SW ON)**

NO → OK

OK → (3)Check wiring between PCME terminal E1 and body ground.

(3) OK → Try another PCME.

(3) BAD → Repair or replace.

Check fuses, H–fuse, fusible link and ignition switch

BAD → Repair or replace.

OK

Check M PI main relay. (See page EG2–302)

BAD → Replace.

OK

Check wiring between MPI main relay and battery.

BAD → Repair or replace.

No.	Terminals	Trouble	Condition	STD voltage
2	BATT – E1	No voltage	–	9 – 14 V

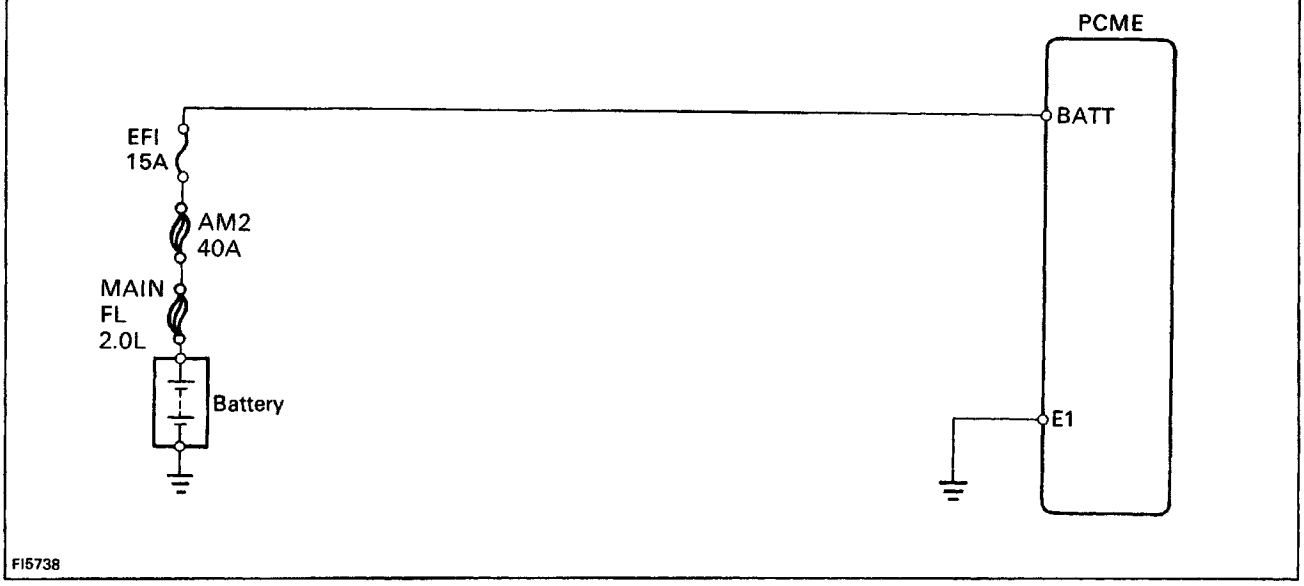

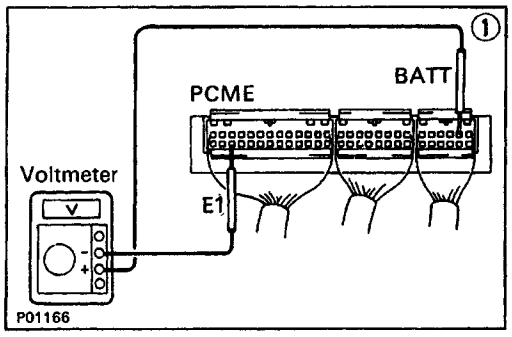

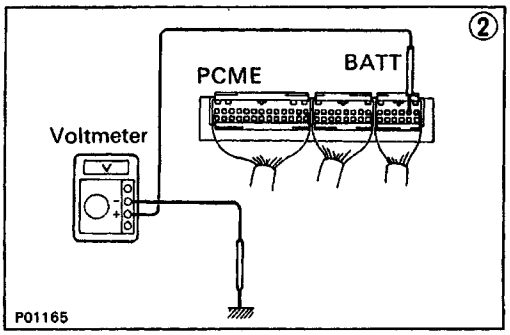

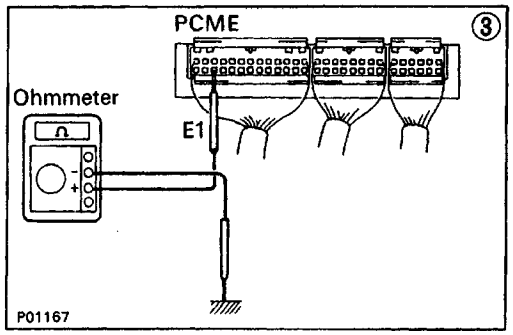

(1) There is no voltage between PCME terminals BATT and E1.

↓

(2) Check that there is voltage between PCME terminal BATT and body ground.

NO → ↓ OK

(3) Check wiring between PCME terminal E1 and bodground.

OK → Try another PCME.

BAD → Repair or replace.

Check fuse, H–fuse and fusible link. BAD → Replace.

↓ OK

Check wiring between PCME terminal and battery. BAD → Repair or replace.

V00920

No.	Terminals	Trouble	Condition		STD voltage
3	ID – E2	No voltage	IG SW ON	Throttle valve open	9 – 14 V
	VC – E2			–	4.5 – 5.5 V
	VTA – E2			Throttle valve fully closed Throttle opener must be cancelled first	0.3 – 0.8 V
				Throttle valve fully open	3.2 – 4.9 V

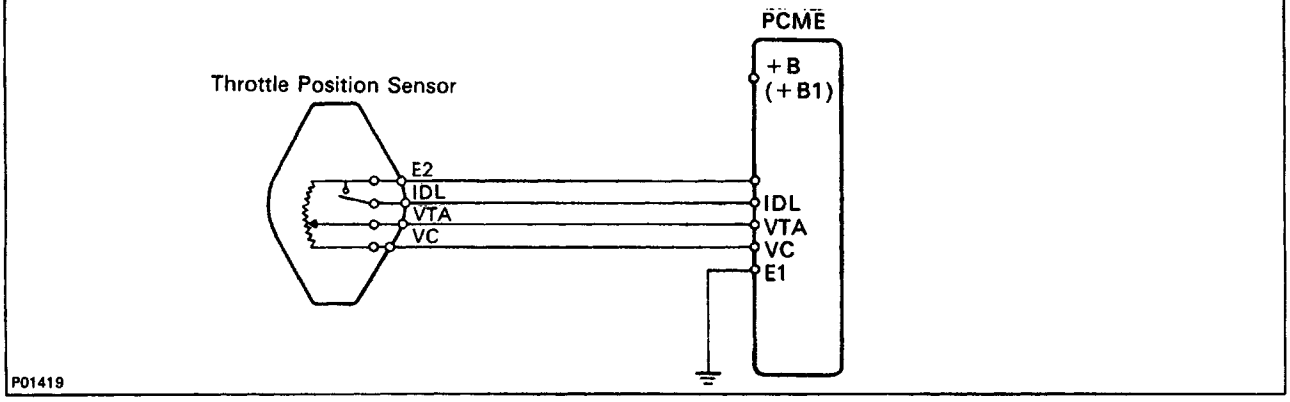

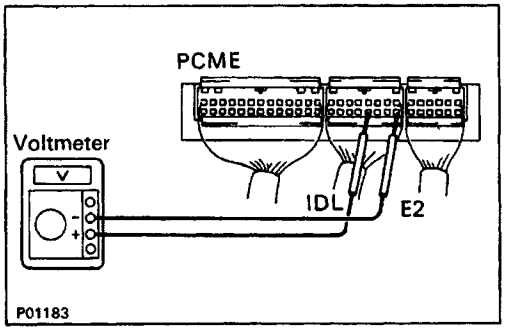

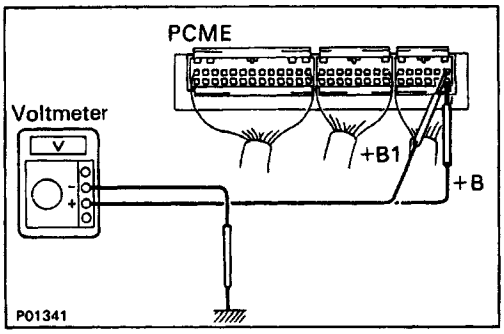

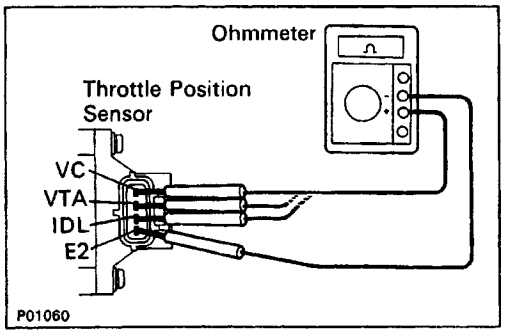

- **IDL – E2**

(1) There is no voltage between PCME terminals IDL and E2 **(IG SW ON)** (Throttle valve open)

↓

(2) Check that there is voltage between PCME terminal + B (+B1) and body ground. **(IG SW ON)**

NO → OK

↓

Check wiring between PCME terminal E1 and body ground.

OK → Try another PCME.

BAD → Repair or replace.

↓

Refer to No.1. (See page EG2–222)

BAD → Repair or replace.

↓ OK

(3) Check throttle position sensor. (See page EG2–288)

BAD → Repair or replace throttle position sensor.

OK → Check wiring between PCME and throttle position sensor.

↓ OK

Try another PCME.

V00921

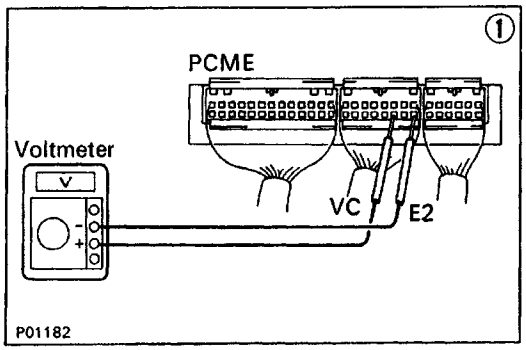

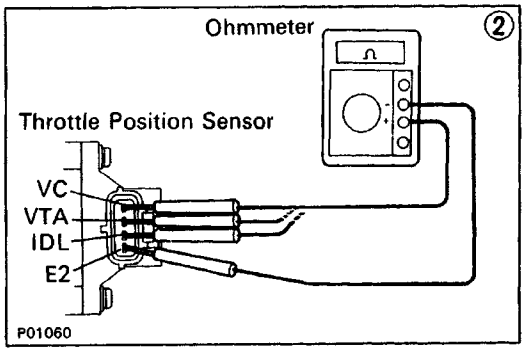

• VC–E2

(1) There is no voltage between PCME terminals VC and E2. **(IG SW ON)**

↓

Check that there is voltage between PCME terminal + B (+B1) and body ground. **(IG SW ON)**

↓ OK

(2) Check throttle position sensor. (See page EG2–288)

↓ BAD

Repair or replace.

↓ OK

Check wiring between PCME and throttle position sensor.

↓ OK

Try another PCME.

NO → Refer to No.1. (See page EG2–220)

BAD → Repair or replace wiring.

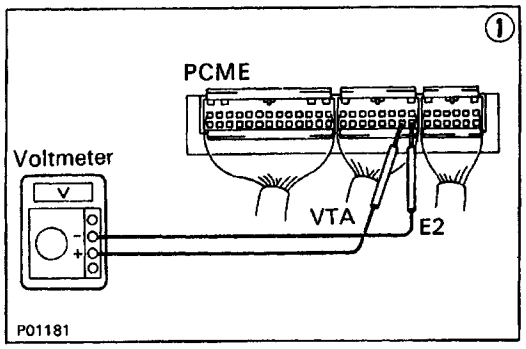

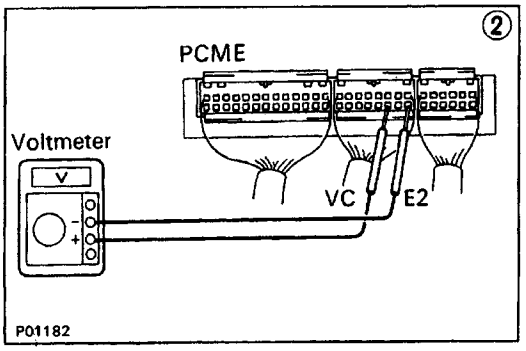

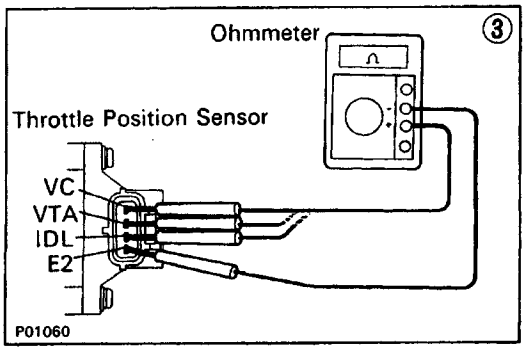

• VTA–E2

(1) There is no specified voltage at PCME terminals VTA and E2. **(IG SW ON)**

↓

(2) Check that there is voltage between PCME terminals VC and E2. **(IG SW ON)**

↓ NO

Refer to VC–E2 trouble Section.

↓ OK

Check throttle position sensor. (See page EG2–288)

↓ OK

Check wiring between PCME and throttle position sensor.

↓ OK

Try another PCME.

OK → Check throttle position sensor. (See page EG2–288)

BAD → Repair or replace.

OK → Check wiring between PCME and throttle position sensor.

BAD → Repair or replace.

V00922

No.	Terminals	Trouble	Condition	STD voltage
4	PIM – E2	No voltage	IG SW ON	3.3 – 3.9 V
	VC – E2			4.5 – 5.5 V

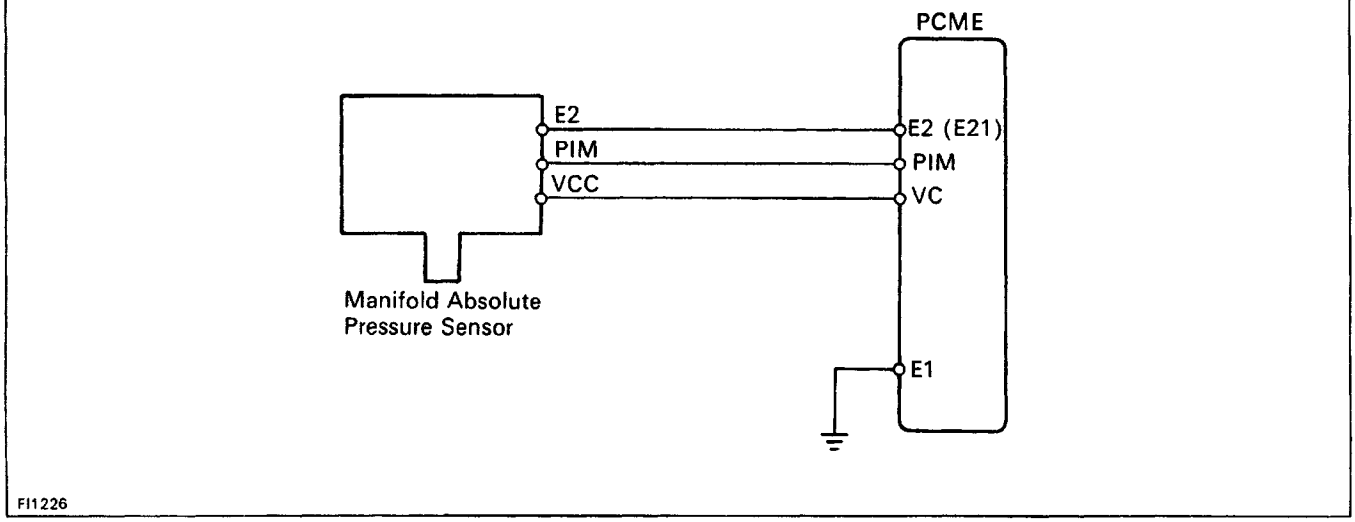

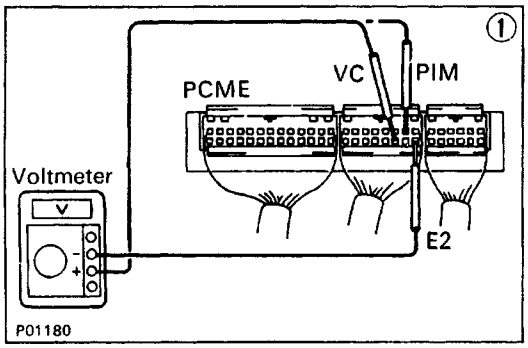

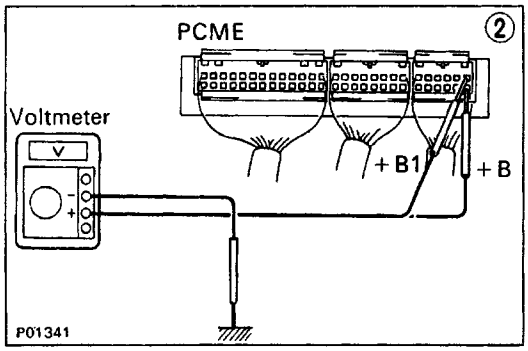

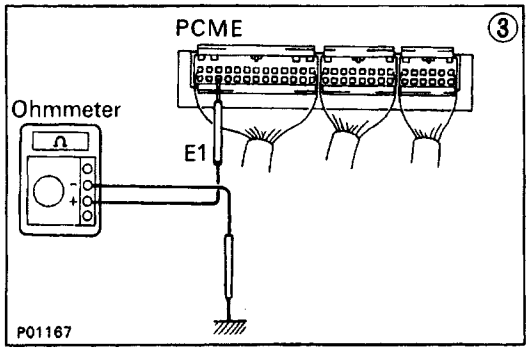

(1) There is no voltage between PCME terminals PIM or VC and E2. **(IG SW ON)**

↓

(2) Check that there is voltage between PCME terminal + B (+B1) and body ground. **(IG SW ON)**

OK → ↓

NO → Refer to No.1. (See page EG2–220)

↓

(3) Check wiring between PCME terminal E1 and body ground.

OK → ↓

BAD → Repair or replace.

Check manifold absolute pressure sensor. (See page EG2–319)

BAD → Replace manifold absolute pressure sensor.

OK → Check wiring between PCME and manifold absolute pressure sensor.

OK → Try another PCME.

BAD → Repair or replace.

V00923

No.	Terminals	Trouble	Condition	STD voltage
5	#10 – E01 #20 – E02	No voltage	IG SW ON	9 – 14 V

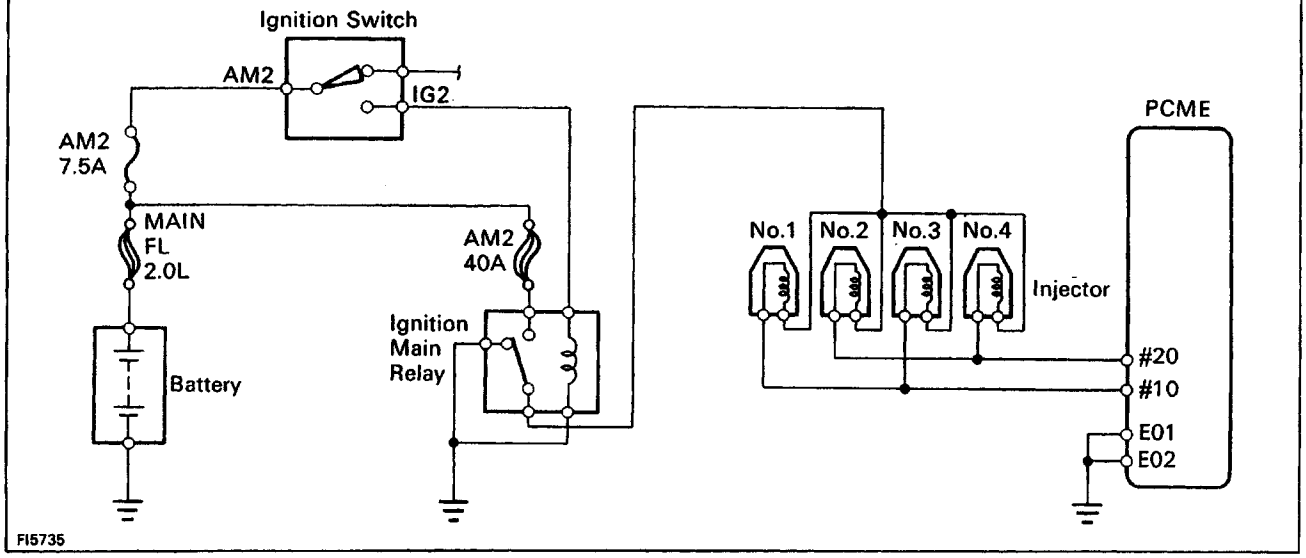

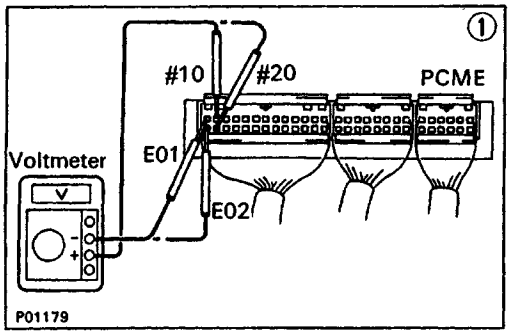

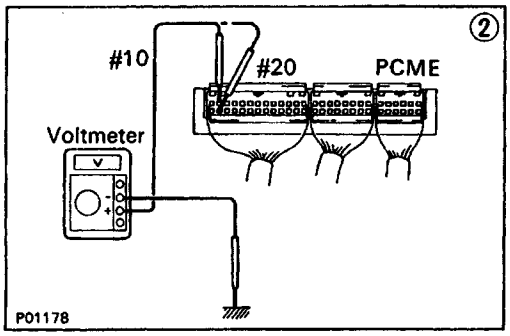

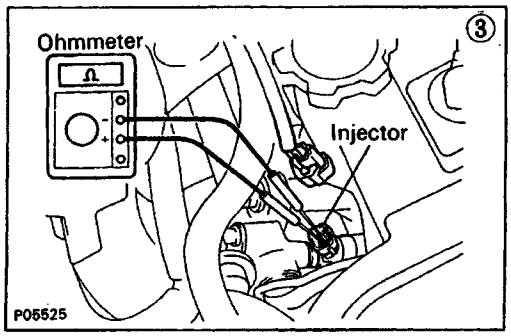

(1) There is no voltage between PCME terminals #10 and/or #20 and E01 and/or E02. **(IG SW ON)**

↓

(2) Check that there is voltage between PCME terminal #10 and/or #20 and body ground.

NO → OK

↓

Check wiring between PCME terminal E01 and/or E02 and body ground.

OK → Try another PCME.

BAD → Repair or replace.

↓

Check fuse, H–fuse, fusible link, ignition switch and ignition main relay. BAD → Repair or Replace.

↓ OK

(3) Check resistance of each injector.
STD resistance: Approx. 13.8Ω

OK → ↓

BAD → Replace injector.

↓

Check wiring between PCME terminal No.10 and/or No.20 and battery. BAD → Repair or replace.

No.	Terminals	Trouble	Condition		STD voltage
6	THA – E2	No voltage	IG SW ON	Intake air temperature 20°C (68°F)	0.5 – 3.4 V

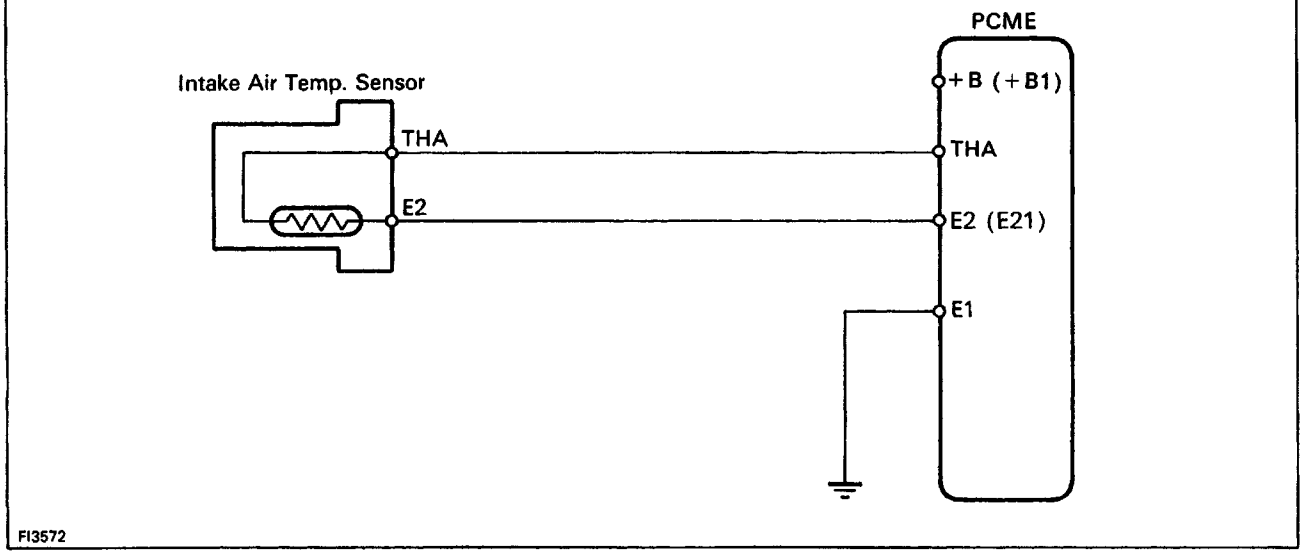

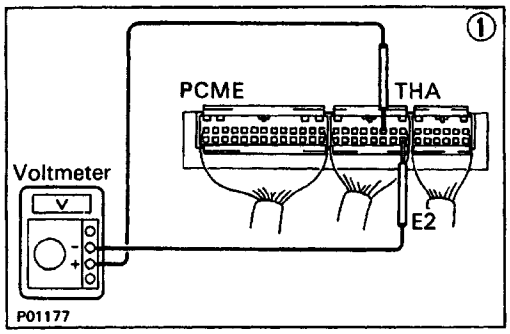

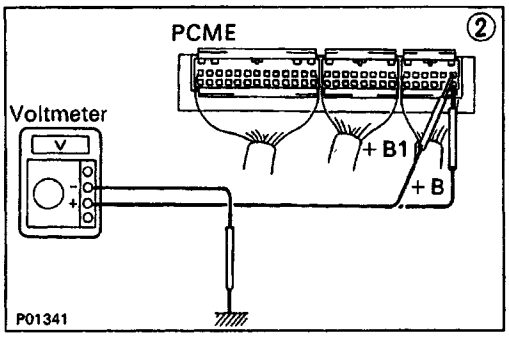

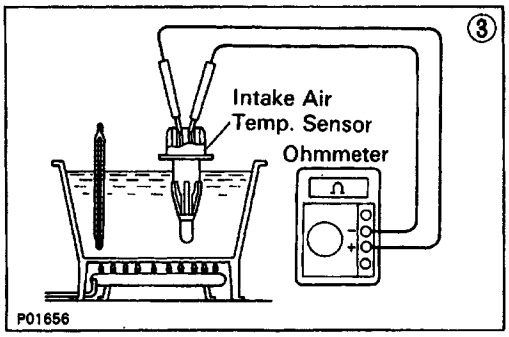

(1) There is no voltage between PCME terminals THA and E2 **(IG SW ON)**

↓

(2) Check that there is voltage between PCME terminal + B or + B1 and body ground. **(IG SW ON)**

OK → ↓

NO → Refer to No.1. (See page EG2–220)

↓

Check wiring between PCME terminal E1 and body ground.

OK → ↓

BAD → Repair or replace.

↓

(3) Check intake air temp. sensor. (See page EG2–306)

BAD → Replace intake air temp. sensor.

OK → ↓

Check wiring between PCME and air temp. sensor.

OK → ↓

BAD → Repair or replace.

↓

Try another PCME.

V00925

No.	Terminals	Trouble	Condition		STD voltage
7	THW – E2	No voltage	IG SW ON	Coolant temperature 80°C (176°F)	0.2 – 1.0 V

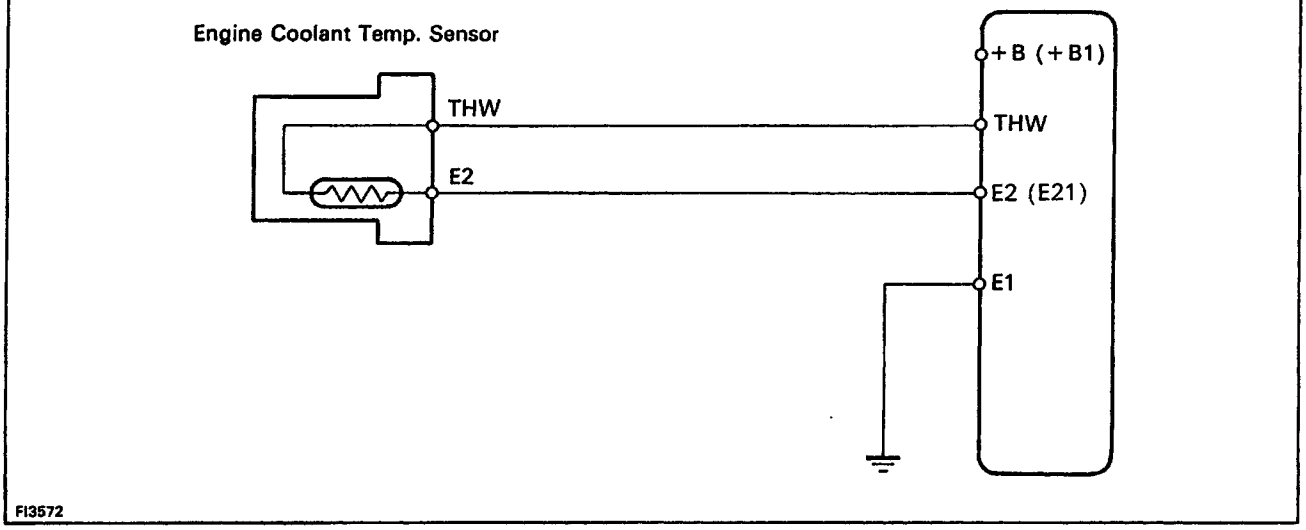

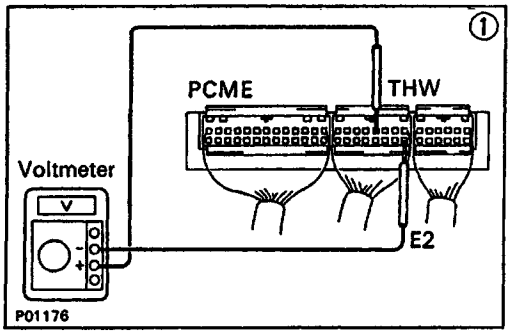

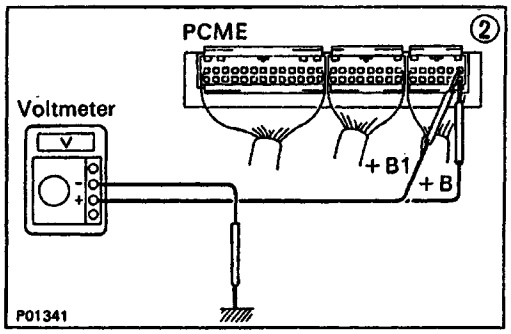

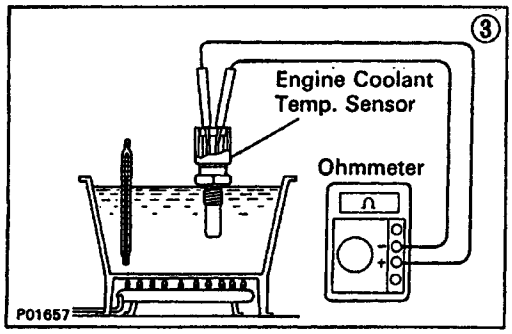

(1) There is no voltage between PCME terminals THW and E2. **(IG SW ON)**

(2) Check that there is voltage between PCME terminal + B (+B1) and body ground. **(IG SW ON)**

OK → Check wiring between PCME terminal E1 and body ground.

NO → Refer to No.1. (See page EG2–220)

OK → (3)Check engine coolant temp. sensor. (See page EG2–305)

BAD → Repair or replace.

BAD → Repair engine coolant temp. sensor.

OK → Check wiring between PCME and engine coolant temp. sensor.

OK → Try another PCME.

BAD → Repair or replace.

V00926

No.	Terminal	Trouble	Condition	STD voltage
8	STA – E1	No voltage	Cranking	6 V or more

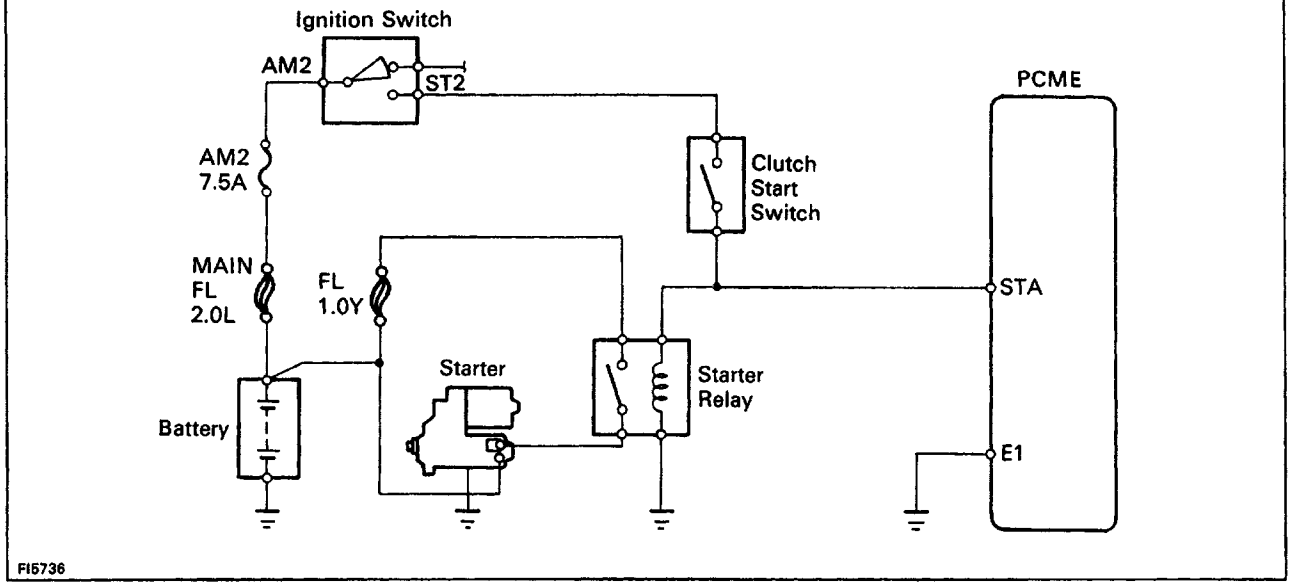

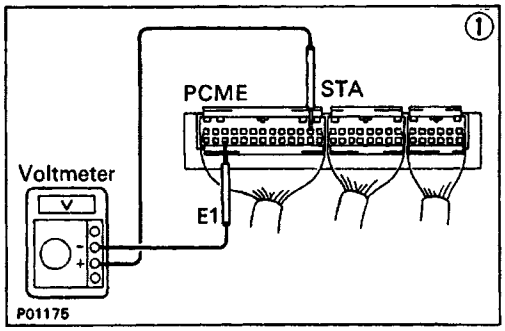

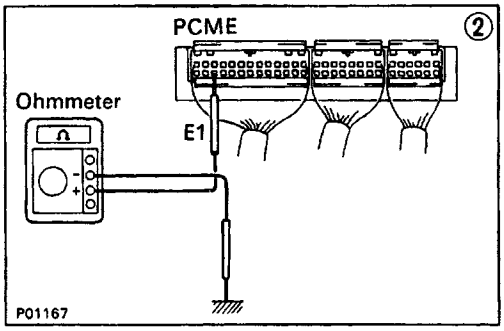

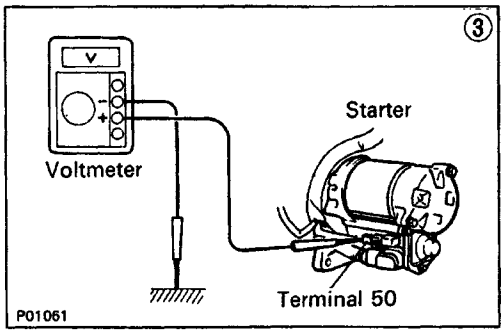

(1) There is no voltage between PCME terminals STA and E1.
(IG SW ON)

Check starter operation.
- OK → Check wiring between PCME terminal STA and ignition switch terminal ST2.
  - OK → (3) Check wiring between PCME terminal E1 and body ground.
    - OK → Try another PCME.
    - BAD → Repair or replace.
  - BAD → Repair or replace.
- BAD → Check fuse, H–fuse, fusible link, battery, wiring, ignition switch, clutch start switch and starter relay.
  - BAD → Repair or replace.
  - OK → (3) Check that there is voltage at starter terminal 50.
    (IG SW START) STD voltage: 6 V or more
    - OK → Check starter.
    - NO → Check wiring between ignition switch terminal ST2 and starter terminal 50.

V00927

No.	Terminals	Trouble	Condition	STD voltage
9	IGT – E1	No voltage	Idling	Pulse generation

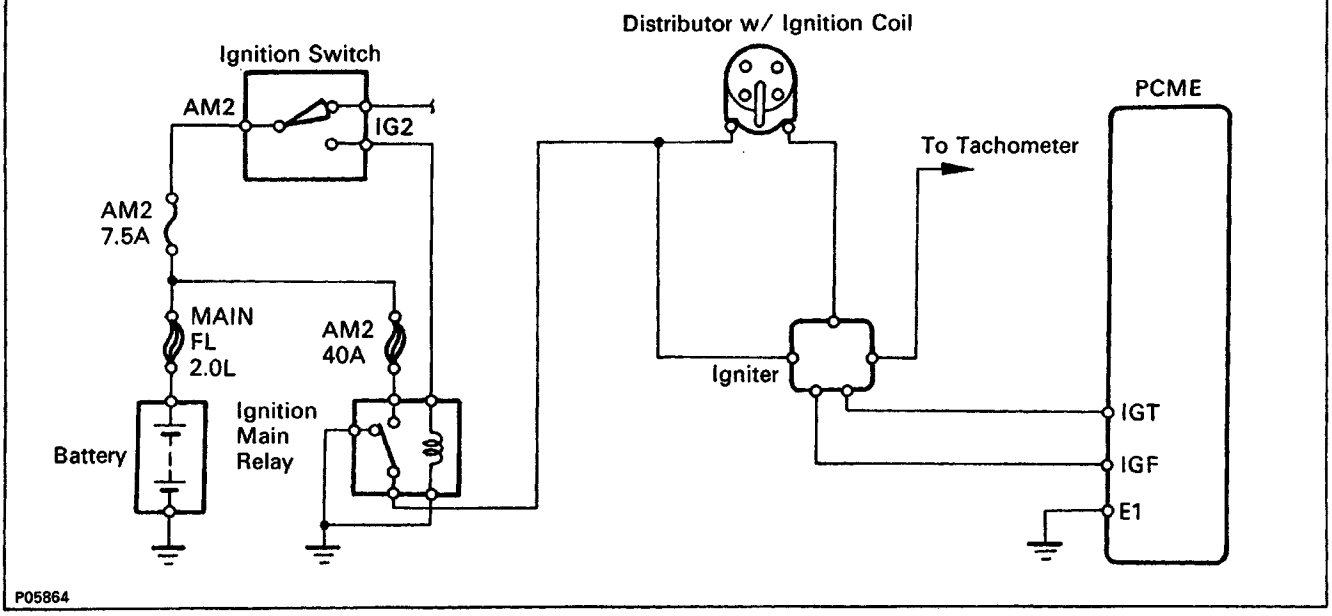

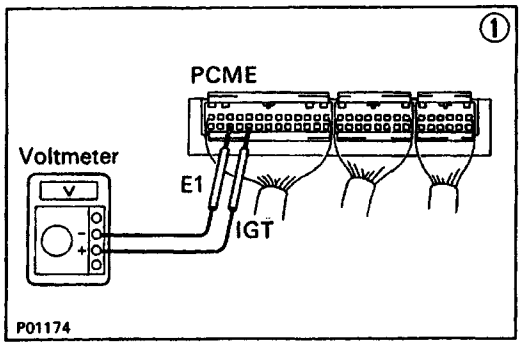

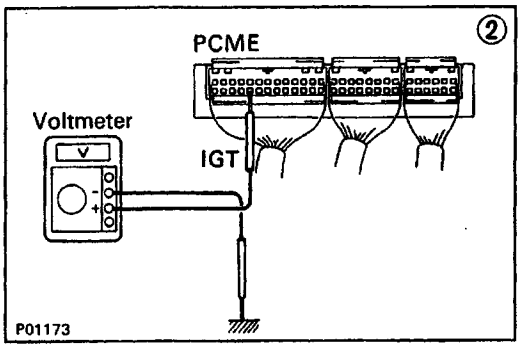

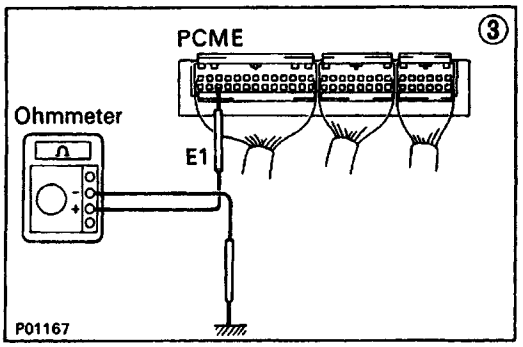

(1) There is no voltage between PCME terminals IGT and E1. **(Idling)**

↓

(2) Check that there is voltage between PCME terminal IGT and body ground. **(Idling)**

NO → (3) Check wiring between PCME terminal E1 and body ground. BAD → Repair or Replace.

(3) OK → Try another PCME.

(2) OK →

Check fuse, H–fuse, fusible link, ignition switch and ignition main relay. BAD → Repair or replace.

OK →

Check distributor. (See IG section) BAD → Repair or replace.

OK →

Check wiring between PCME and battery BAD → Repair or replace.

OK →

Check igniter. (See IG section) BAD → Repair or replace.

V00928

No.	Terminals	Trouble	Condition	STD voltage
10	ISCO – E1	No voltage	IG SW ON	9 – 14 V

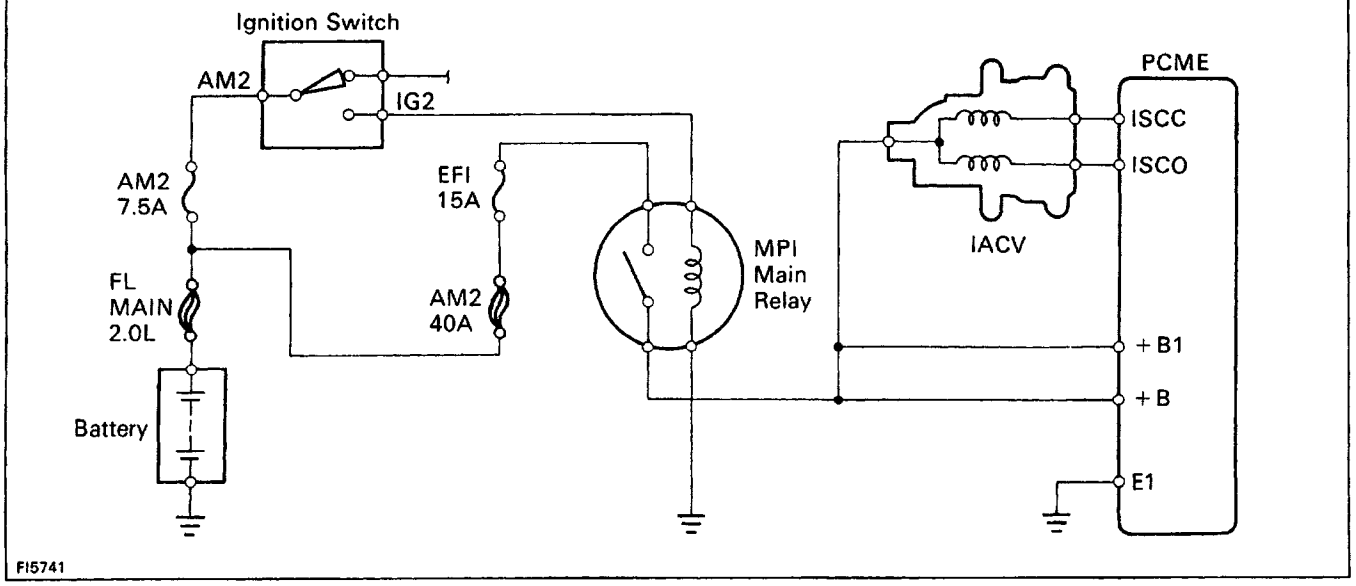

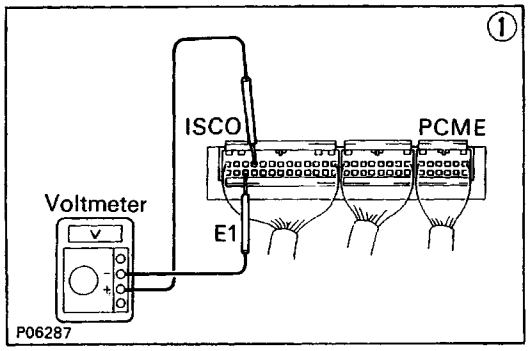

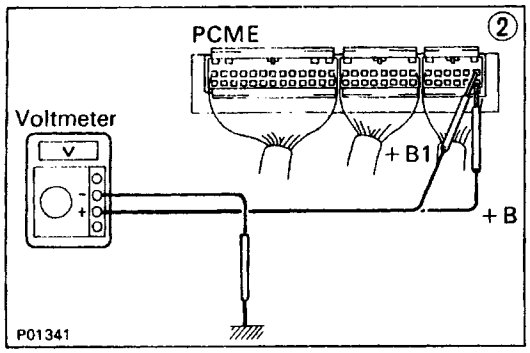

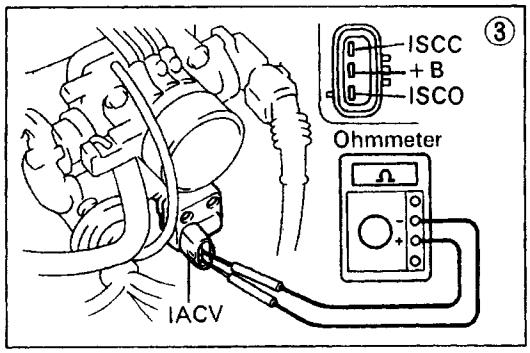

(1) There is no voltage between PCME terminals ISCO and E1. **(IG SW ON)**

↓

(2) Check that there is voltage between PCME terminal + B or + B1 and body ground. **(IG SW ON)**

OK ↓

NO → Refer to No.1. (See page EG2–220)

↓

(3) Check resistance between IACV terminals + B and ISCC or ISCO. **STD resistance: 19.3 – 22.3Ω**

BAD → Replace IACV.

OK ↓

Check wiring between PCME and IACV.

BAD → Repair or replace wiring.

OK ↓

Try another PCME.

V00929

No.	Terminals	Trouble	Condition	STD voltage
11	W – E1	No voltage	No trouble ("CHECK" engine warning light off) and engine running.	9–14V

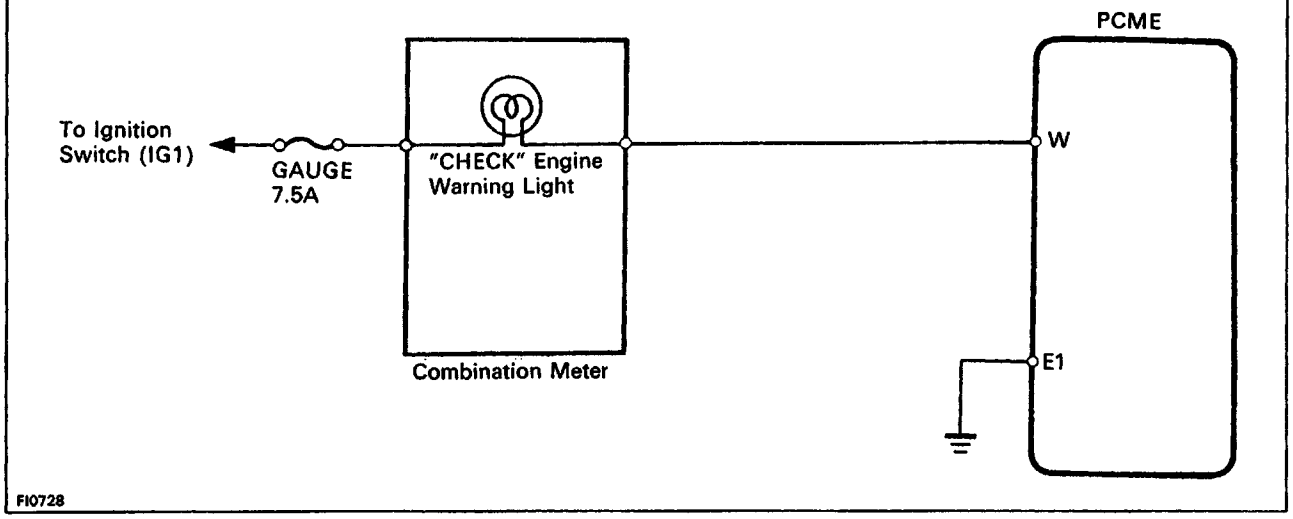

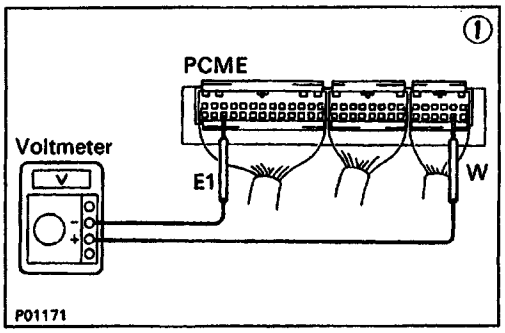

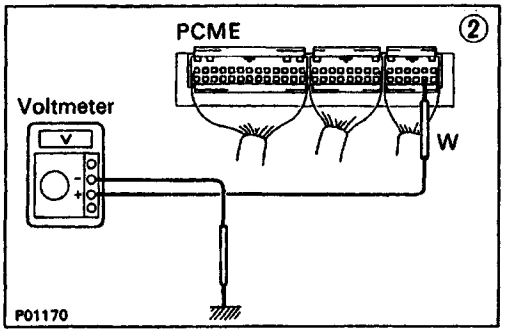

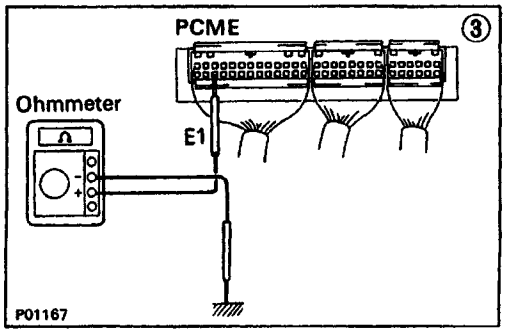

(1) There is no voltage between PCME terminals W and E1. **(Idling)**

↓

(2) Check that there is voltage between PCME terminal W and body ground.

NO → ↓ OK

(3) Check wiring between PCME terminal E1 and body ground.

↓ OK → Try another PCME.

→ BAD → Repair or replace.

Check fuse GAUGE (7.5A) and check engine warning light.

↓ OK

→ BAD → Repair or replace.

Repair or replace. → Fuse blows again

Check wiring between PCME terminal W and fuse. → BAD → Repair or replace.

V00930

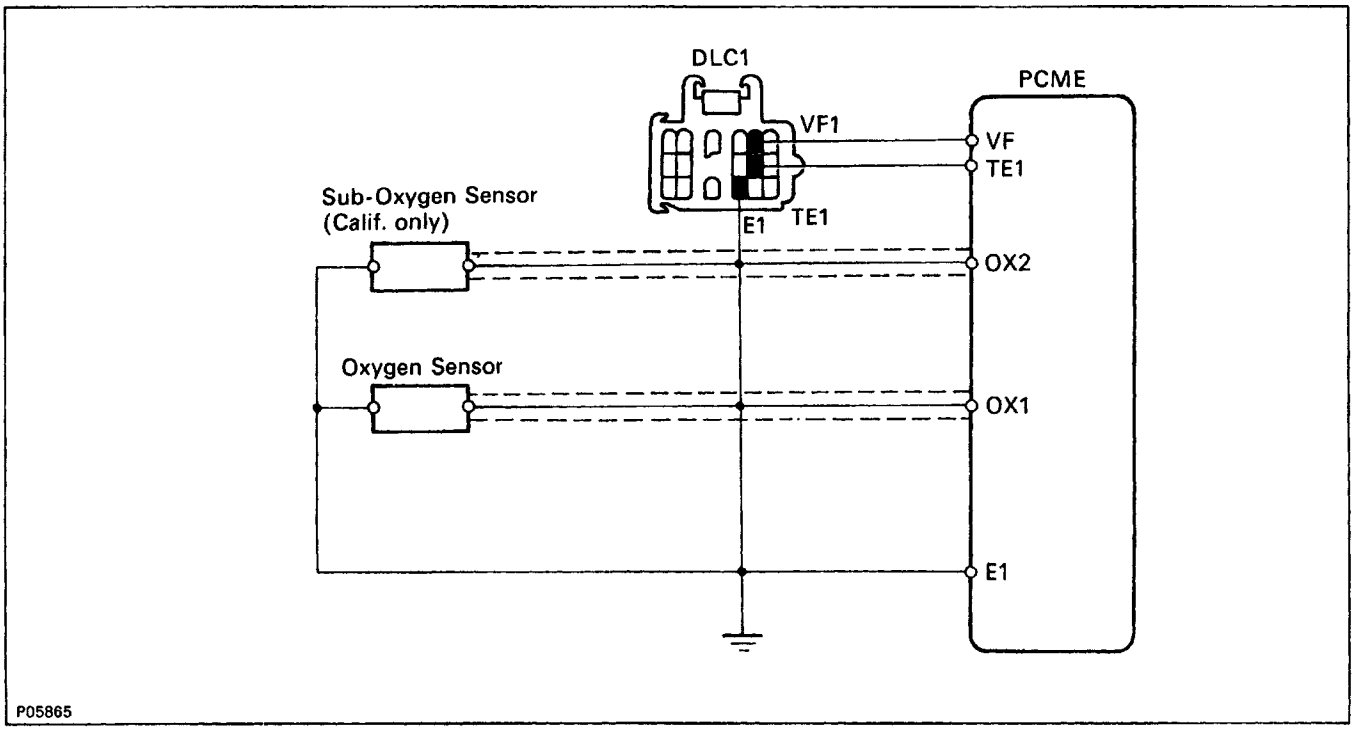

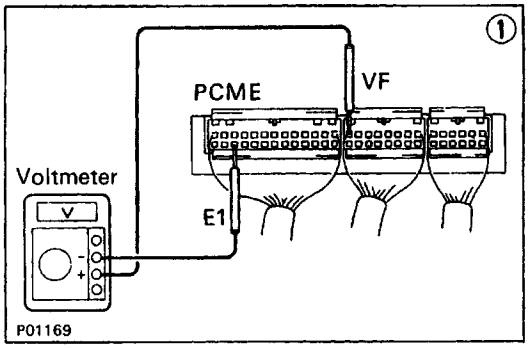

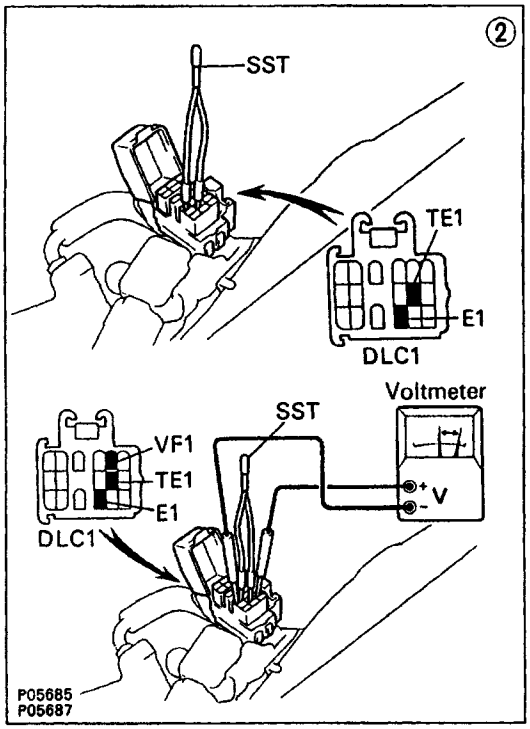

(1) There is no voltage between PCME terminals VF and E1.

Check that there is specified between PCME terminal VF and body ground.

NO → OK → Check wiring between PCME terminal E1 and body ground.

OK → Try another PCME.

BAD → Repair or replace.

Check for suction of air into exhaust system. BAD → Repair air suction.

OK

Check for air leak from air intake system. BAD → Repair air leak.

OK

Check spark plugs. BAD → Repair or replace.

OK

Check distributor w/ ignition coil and ignition system. BAD → Repair or replace.

OK

Check fuel pressure. BAD → Repair or replace.

OK

Check injectors. BAD → Repair or replace.

OK

Check manifold absolute pressure sensor. BAD → Repair or replace.

OK

Check operation of oxygen sensors. OK → System normal.

BAD

Check wiring between oxygen sensors and PCME connectors. BAD → Repair wiring.

OK

Repair oxygen sensors.

V00931

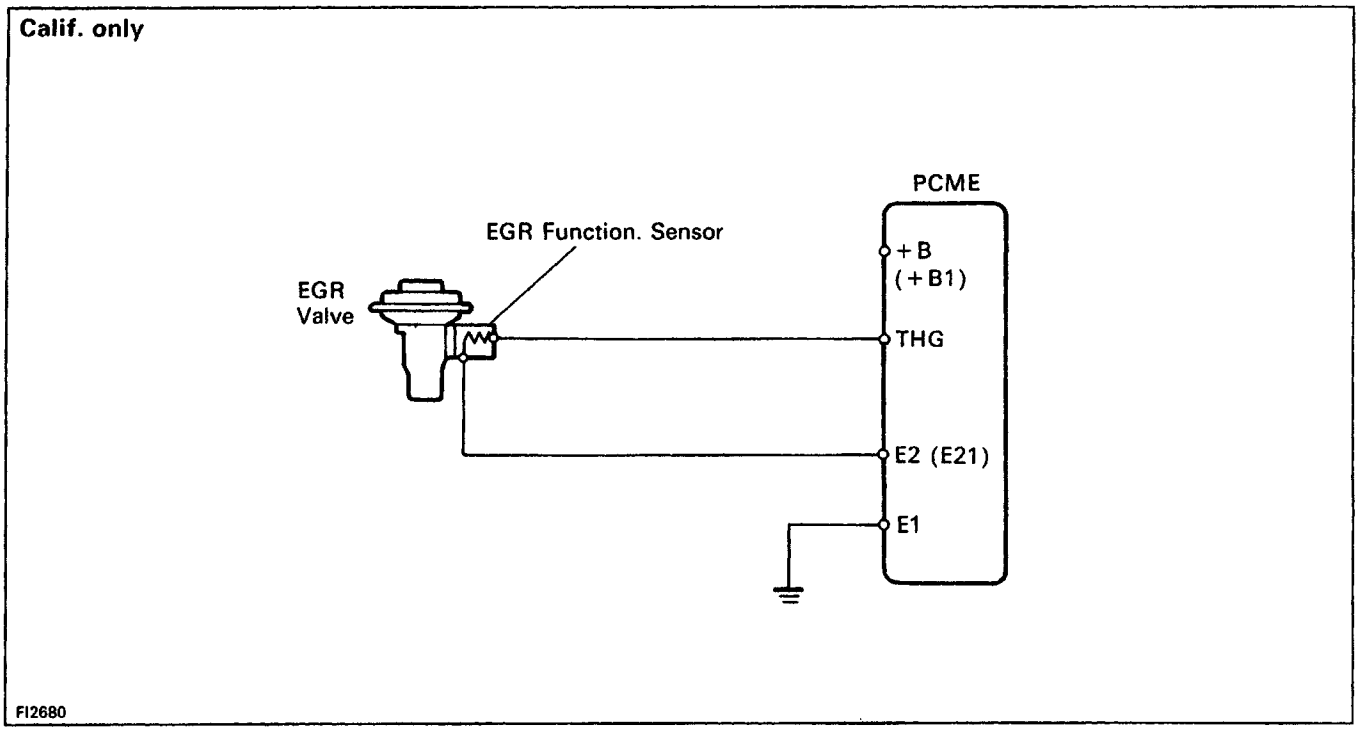

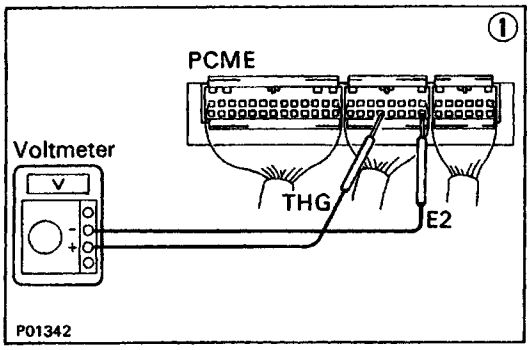

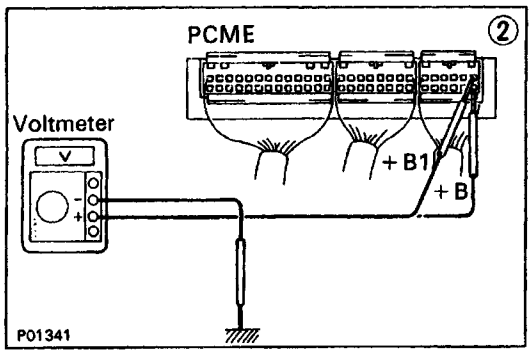

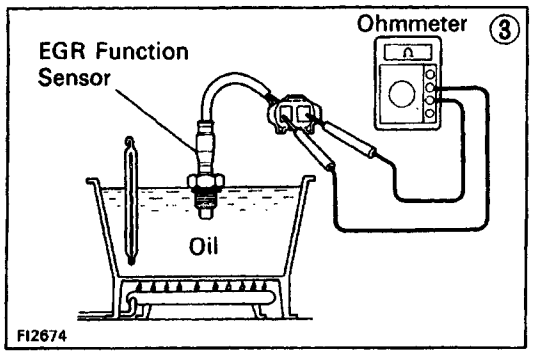

(1) There is no voltage between PCME terminals THG and E2. **(IG SW ON)**

↓

(2) Check that there is voltage between PCME terminal + B or + B1 and body ground. **(IG SW ON)**

OK ↓

NO → Refer to No.1 (See page EG2–220)

↓

Check wiring between PCME terminal E1 and body ground.

OK ↓

BAD → Repair or replace

↓

Check EGR system. (See page EG2–173)

BAD → Repair or replace.

↓ OK

(3) Check EGR function sensor. (See page EG2–321)

BAD → Replace EGR function sensor.

OK → Check wiring between PCME and EGR function sensor.

OK → Try another PCME.

BAD → Repair or replace.

V00932

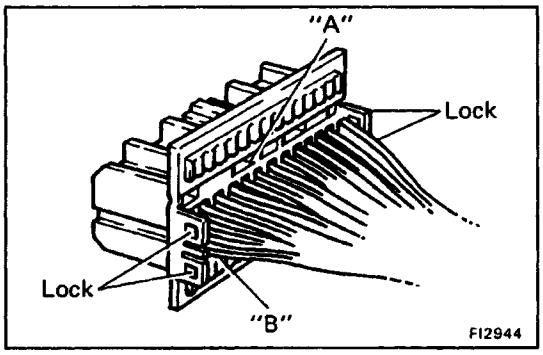

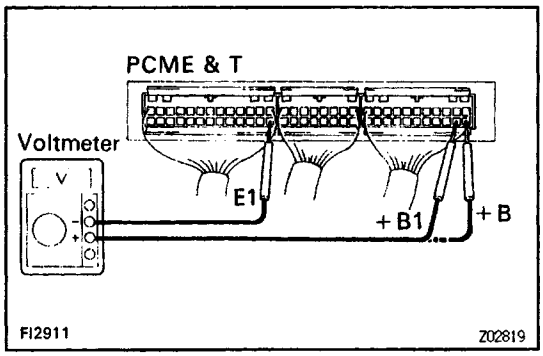

SYSTEM CHECK PROCEDURE (A/T)

PREPARATION

(a) Disconnect the connectors from the PCME&T.

(b) Remove the locks as shown in the illustration so that the tester probe(s) can easily come in.

NOTICE: Pay attention to sections 'A' and 'B' in the illustration which can be easily broken.

(e) Reconnect the connectors to the PCME&T.

HINT:

- Perform all voltage measurements with the connectors connected.
- Verify that the battery voltage is 1 1 V or more when the ignition switch is in the "ON" position.

Using a voltmeter with high impedance (10 kΩ/V minimum), measure the voltage at each terminal of the wiring connectors.

PCME & T Terminals (A/T)

Symbol	Terminal Name	Symbol	Terminal Name	Symbol	Terminal Name
E01	POWER GROUND	S1	ECT SOLENOID		–
E02	POWER GROUND	S2	ECT SOLENOID	ACT	A/C AMPLIFIER
#10	INJECTOR	SL	ECT SOLENOID	SP1	VSPG
	–	E1	ENGINE GROUND	OD1	OD OFF SWITCH
#20	INJECTOR	VF	DLC1	ACA	A/C AMPLIFIER
	–	E21	SENSOR GROUND		
ISCO	IDLE AIR CONTROL VALVE	TT	DLC1	OD2	OD MAIN SWITCH
EGR	EG R VSV	TE1	DLC1		–
ISCC	IDLE AIR CONTROL VALVE	OX1	OXYGEN SENSOR		
	–	TE2	DLC1		–
FPU	FUEL PRESSURE VSV	*OX2	SUB–OXYGEN SENSOR	W	WARNING LIGHT
	–	KNK	KNOCK SENSOR	PS	PS CONTROL MODULE
ISCV	A/C IDLE–UP VSV	THW	ECTS	B/K	STOP LIGHT SWITCH
IGT	IGNITER	IDL	THROTTLE POSITION SENSOR	PSCT	PS CONTROL MODULE
2	PARK/NEUTRAL SWITCH	THA	INTAKE AIR TEMP.SENSOR	THE	EVAPORATOR TEMP. SENSOR
L	PARK/NEUTRAL SWITCH	VTA	THROTTLE POSITION SENSOR	FC	CIRCUIT OPENING RELAY
NE–	DISTRIBUTOR	PIM	MAP	ELS	TAILLIGHT RELAY DEFOGGER SWITCH
G+	DISTRIBUTOR	*THG	EGR FUNCTION SENSOR	+B	MPI MAIN RELAY
NE+	DISTRIBUTOR	VC	MAP THROTTLE POSITION SENSOR	BATT	BATTERY
G–	DISTRIBUTOR	E2	SENSOR GROUND	+B1	MPI MAIN RELAY
IGF	IGNITER	STA	STARTER SWITCH	* Calif. only	
SP2	VSPG	NSW	PARK/NEUTRAL SWITCH		

PCME & T Terminals

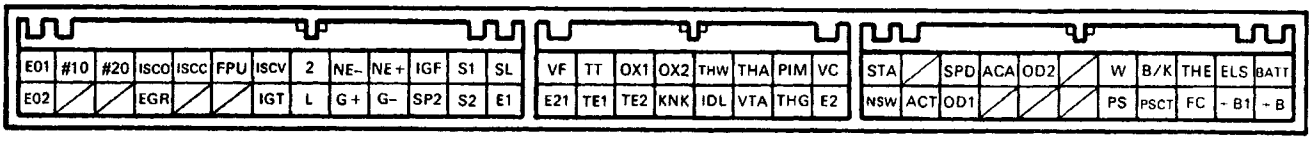

FI2796

V00946

PCME & T Wiring Connectors Voltage (A/T)

No.	Terminals	Condition		STD voltage (V)	See page
1	+B, +B1 – E1	IG SW ON		9 – 14	EG2–236
2	BATT – E1	—		9 – 14	EG2–237
3	IDL – E2	IG SW ON	Throttle valve open	9 – 14	EG2–238
	VC – E2		—	4.5 – 5.5	
	VTA – E2		Throttle valve fully closed (Throttle opener must be cancelled first)	0.3 – 0.8	
			Throttle valve fully open	3.2 – 4.9	
4	PIM – E2	IG SW ON		3.3 – 3.9	EG2–240
	VC – E2			4.5 – 5.5	
5	#10, #20 – E01, E02			9 – 14	EG2–241
6	THA – E2	IG SW ON	Intake air temp. 20°C (68°F)	0.5 – 3.4	EG2–242
7	THW – E2		Coolant temp. 80°C (176°F)	0.2 – 1.0	EG2–243
8	STA – E1	Cranking		6 or more	EG2–244
9	IGT – E1	Idling		Pulse generation	EG2–245
10	ISCO – E1	IG SW ON		9 – 14	EG2–246
11	W – E1	No trouble ("CHECK" engine warning light off) and engine running		9 – 14	EG2–247

PCME & T Terminals

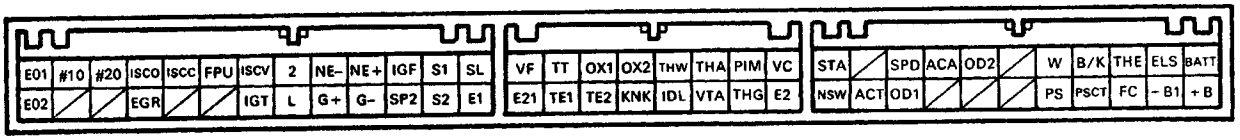

F12796

No.	Terminals	Trouble	Condition	STD voltage
1	+B, +B1 – E1	No voltage	IG SW ON	9 – 14 V

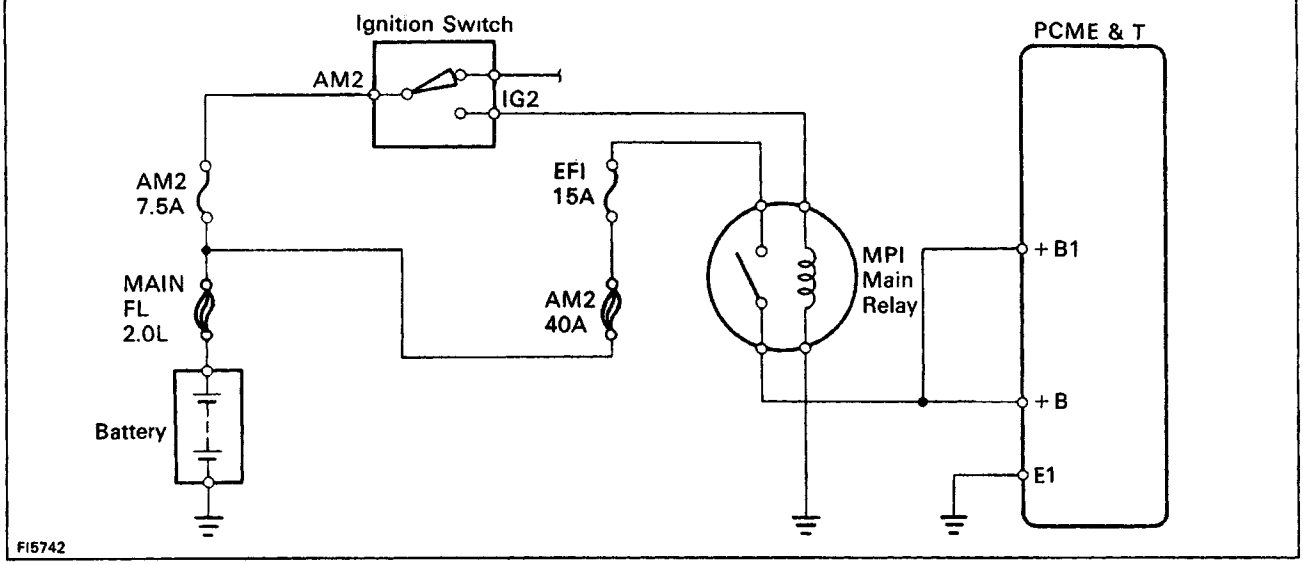

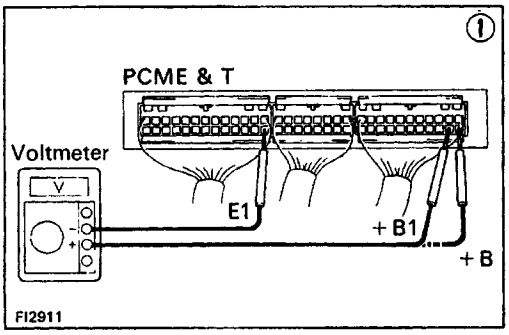

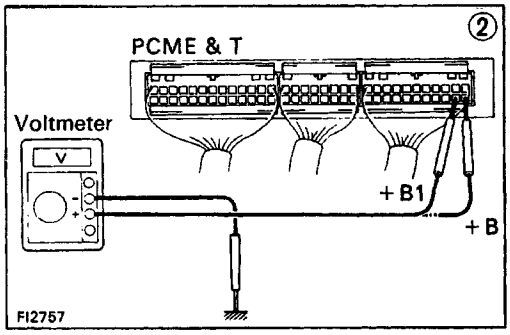

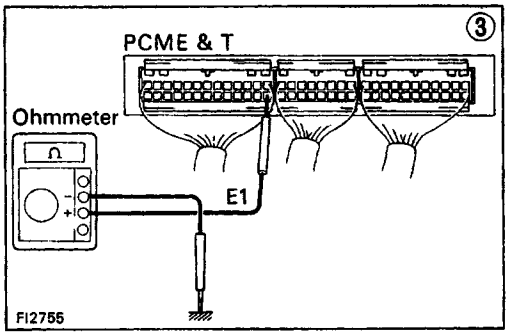

(1) There is no voltage between PCME & T terminals +B or +B1 and E1. **(IG SW ON)**

↓

(2) Check that there is voltage between PCME & T terminal + B or +B1 and body ground. **(IG SW ON)**

NO → (3) Check wiring between PCME & T terminal E1 and body ground.
- OK → Try another PCME & T.
- BAD → Repair or replace.

OK ↓

Check fuses, H–fuse, fusible link and ignition switch. BAD → Repair or replace.

OK ↓

Check MPI main relay. (See page EG2–302) BAD → Replace.

OK ↓

Check wiring between MPI main relay and battery. BAD → Repair or replace.

V00934

No.	Terminals	Trouble	Condition	STD voltage
2	BATT – E1	No voltage	–	9 – 14 V

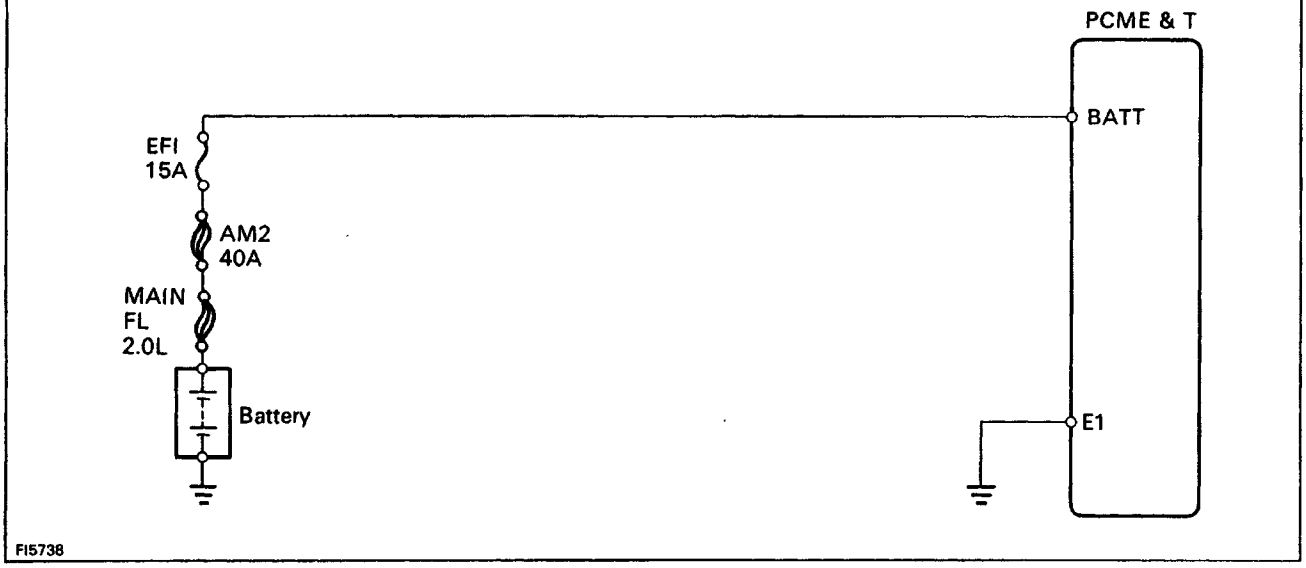

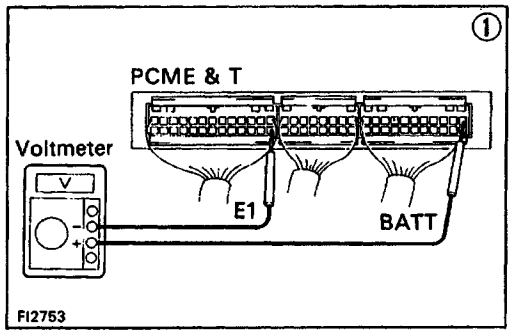

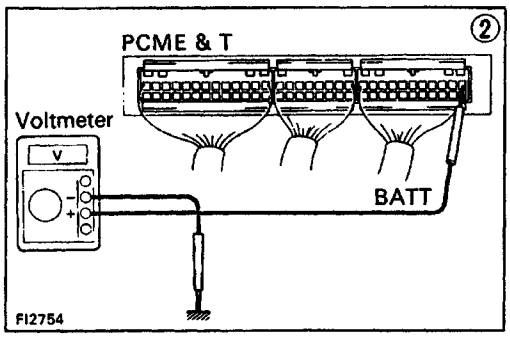

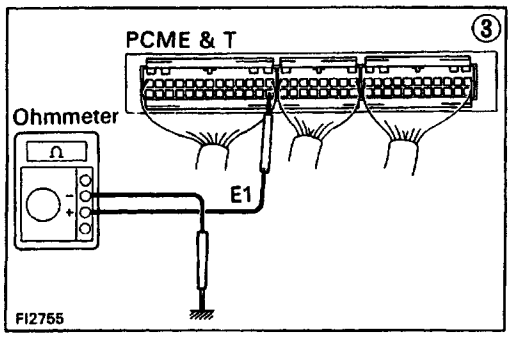

(1) There is no voltage between PCME & T terminals BATT and E1.

↓

(2) Check that there is voltage between PCME & T terminal BATT and body ground.

NO → Check fuse, H–fuse and fusible link.

OK → (3) Check wiring between PCME & T terminal E1 and body ground.

OK → Try another PCME & T.

BAD → Repair or replace.

Check fuse, H–fuse and fusible link. BAD → Replace.

OK ↓

Check wiring between PCME & T terminal and battery. BAD → Repair or replace.

V00950

No.	Terminals	Trouble	Condition		STD voltage
3	IDL – E2	No voltage	IG SW ON	Throttle valve open	9 – 14 V
	VC – E2			–	4.5 – 5.5 V
	VTA – E2			Throttle valve fully closed Throttle opener must be .(cancelled first	0.3 – 0.8 V
				Throttle valve fully open	3.2 – 4.9 V

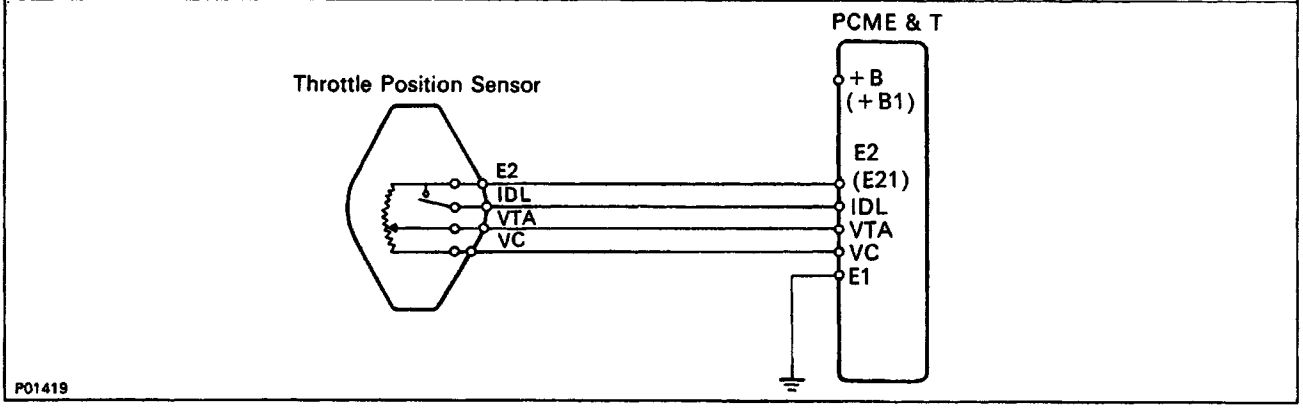

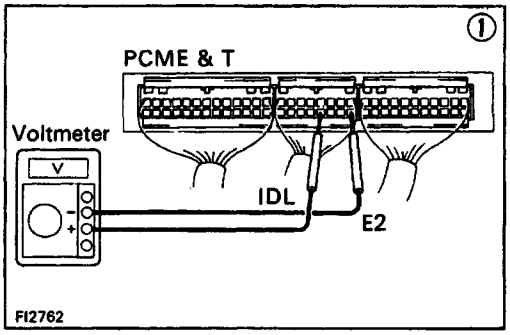

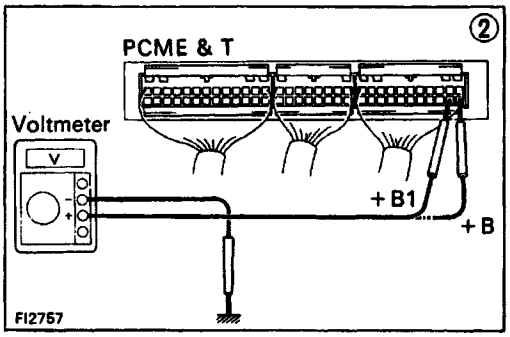

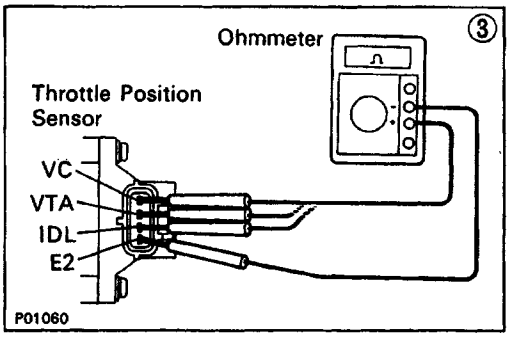

- **IDL– E2**

(1) There is no voltage between PCME & T terminals IDL and E2. **(IG SW ON)** (Throttle valve open)

↓

(2) Check that there is voltage between PCME & T terminal + B (+B1) and body ground. **(IG SW ON)**

NO → Refer to No.1. (See page EG2–236)

OK → Check wiring between PCME & T terminal E1 and body ground.

OK → Try another PCME & T.

BAD → Repair or replace.

Refer to No.1. (See page EG2–236) BAD → Repair or replace.

OK → (3) Check throttle position sensor. (See page EG2–288)

BAD → Repair or replace throttle position sensor.

OK → Check wiring between PCME & T and throttle position sensor.

BAD → Repair or replace.

OK → Try another PCME & T.

V00935

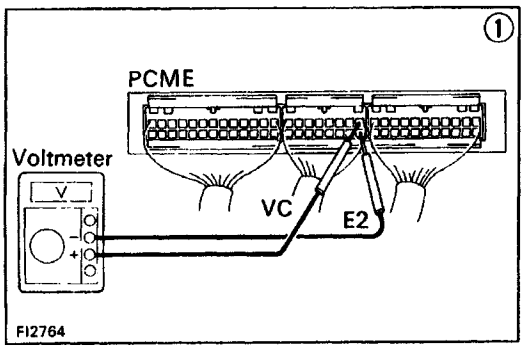

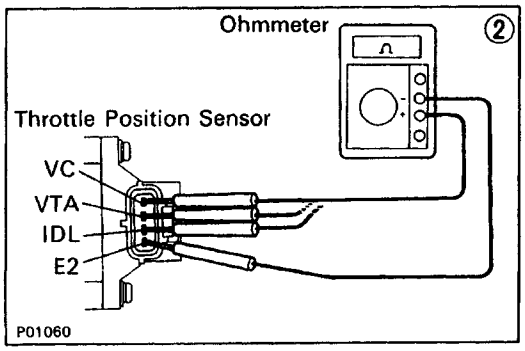

• VC–E2

(1) There is no voltage between PCME & T terminals VC and E2. **(IG SW ON)**

↓

Check that there is voltage between PCME & T terminal + B (+ B1) and body ground. **(IG SW ON)**

↓ OK

(2) Check throttle position sensor. (See page EG2–288)

↓ BAD

Repair or replace.

↓ OK

Check wiring between PCME & T and throttle position sensor.

↓ OK

Try another PCME & T.

NO → Refer to No–1 (See page EG2–236)

BAD → Repair or replace wiring

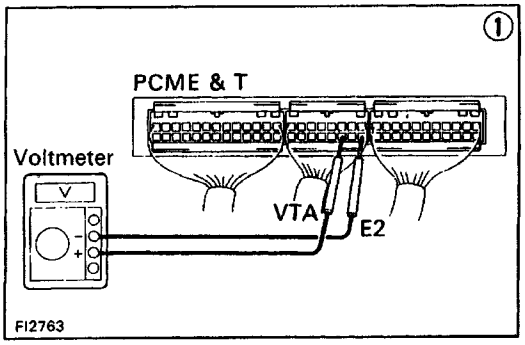

• VTA – E2

(1) There is no specified voltage at PCME & T terminals VTA and E2. **(IG SW ON)**

↓

(2) Check that there is voltage between PCME & T terminals VC and E2. **(IG SW ON)**

↓ NO

Refer to VC–E2 trouble section.

↓ OK

(3) Check throttle position sensor. (See page EG2–288)

BAD → Repair or replace.

↓ OK

Check wiring between PCME & T and throttle position sensor.

BAD → Repair or replace.

↓ OK

Try another PCME & T.

OK → (3) Check throttle position sensor. (See page EG2–288)

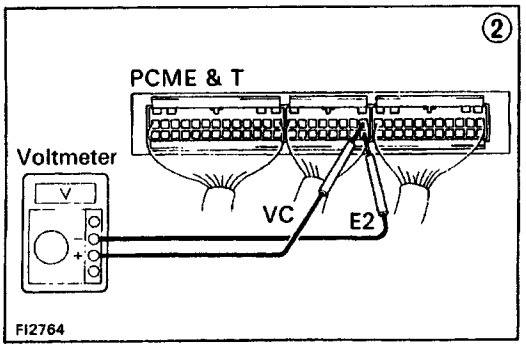

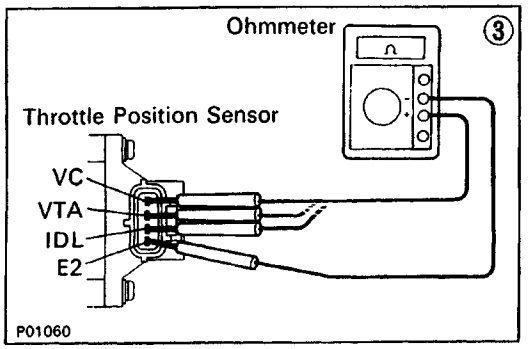

V00936

No.	Terminals	Trouble	Condition	STD voltage
4	PIM – E2	No voltage	IG SW ON	3.3 – 3.9 V
	VC – E2			4.5 – 5.5 V

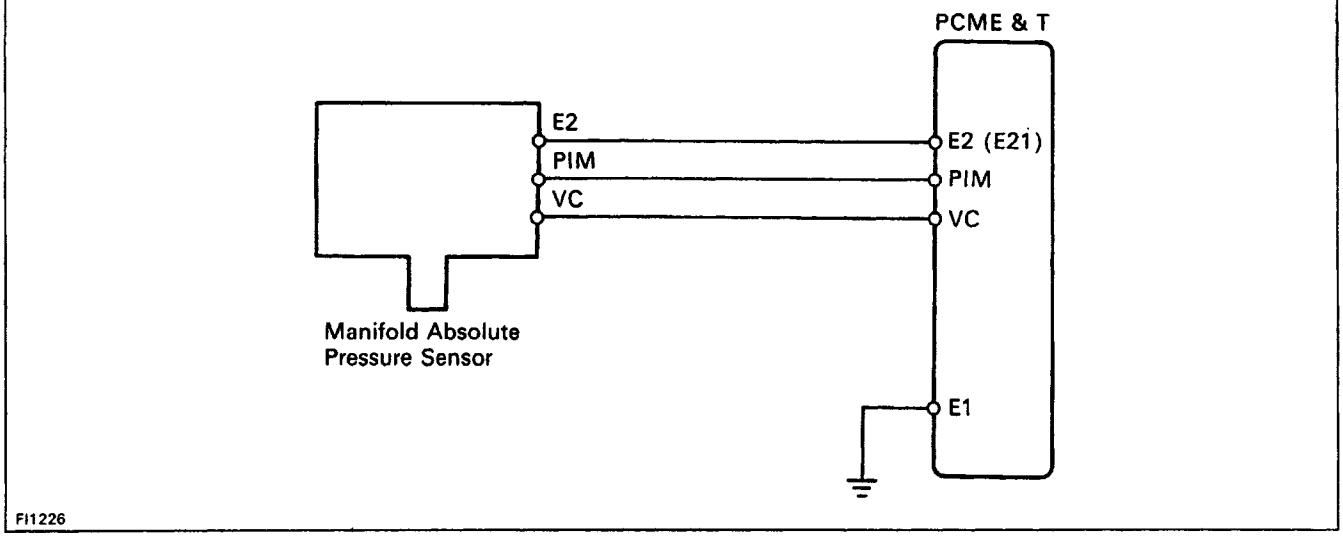

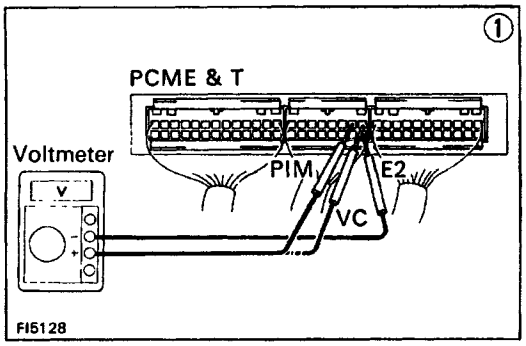

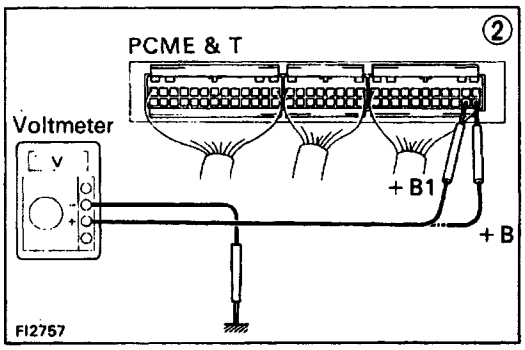

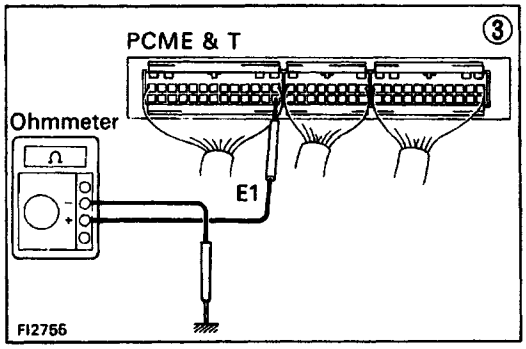

(1) There is no voltage between PCME & T terminals PIM or VC and E2. **(IG SW ON)**

↓

(2) Check that there is voltage between PCME & T terminal + B (+ B1) and body ground. **(IG SW ON)**

OK → ↓

NO → Refer to No.1 (See page EG2–236)

↓

(3) Check wiring between PCME & T terminal E1 and body ground.

OK → ↓

BAD → Repair or replace.

Check manifold absolute pressure (See page EG2–319)

BAD → Replace manifold absolute pressure sensor.

OK → ↓

Check wiring between PCME & T and manifold absolute pressure sensor.

OK → ↓

BAD → Repair or replace.

Try another PCME & T.

V00937

No.	Terminals	Trouble	Condition	STD voltage
5	#10 – E01 #20 – E02	No voltage	IG SW ON	9 – 14 V

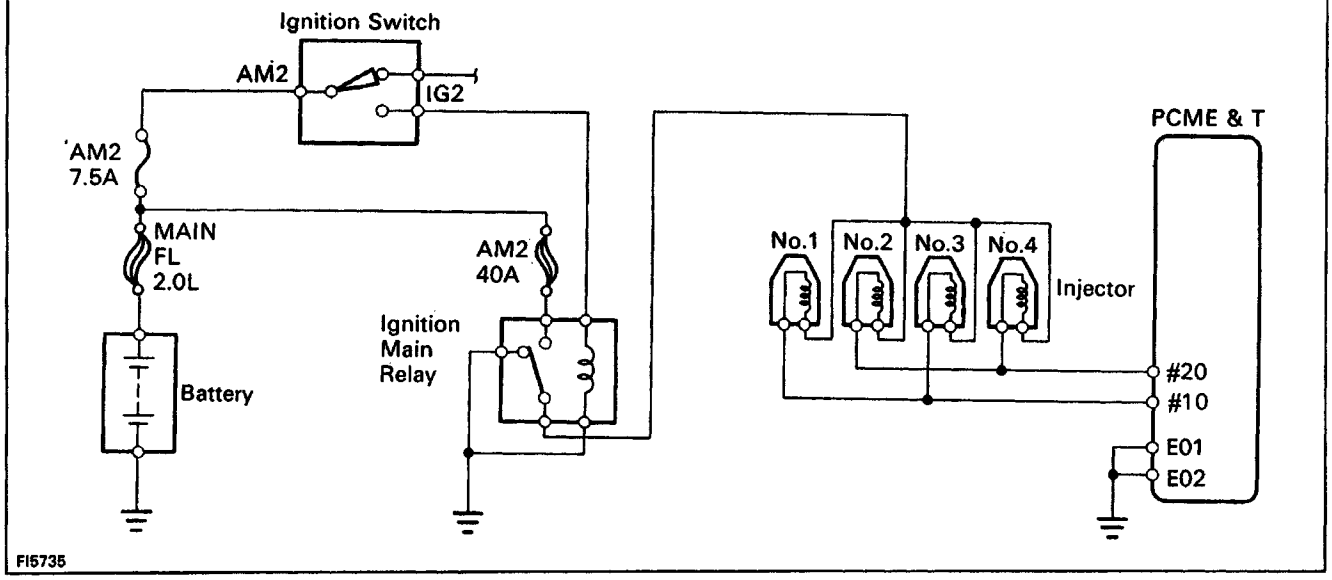

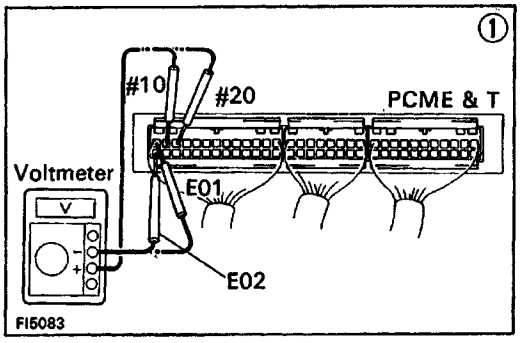

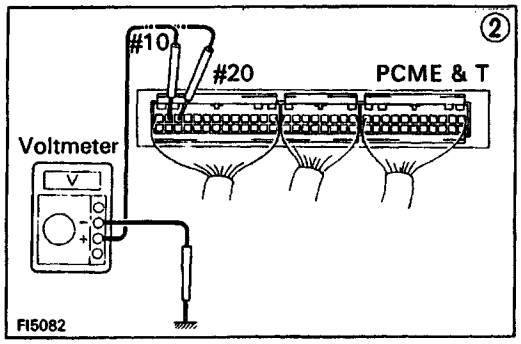

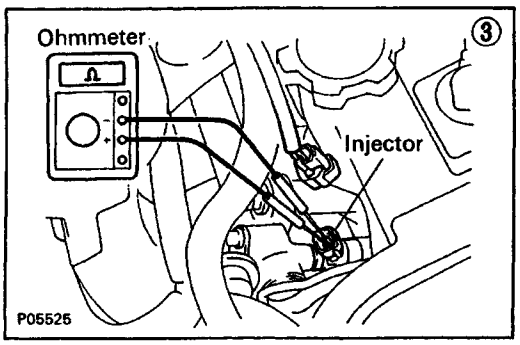

(1) There is no voltage between PCME & T terminals #10 and/or # 20 and E01 and/or E02. **(IG SW ON)**

↓

(2) Check that there is voltage between PCME & T terminal #10 and/or #20 and body ground.

NO → OK

Check wiring between PCME & T terminal E01 and/or E02 and body ground.

OK → Try another PCME & T.

BAD → Repair or replace.

↓

Check fuse, H–fuse, fusible link and ignition switch and ignition main relay. → BAD → Repair or replace.

↓ OK

(3) Check resistance of each injector.
STD resistance: Approx. 13.8Ω

OK → ↓

OK → Repair injector.

↓

Check wiring between PCME & T terminal No.10 and/or No.20 and battery. → BAD → Repair or replace.

V00938

No.	Terminals	Trouble	Condition		STD voltage
6	THA – E2	No voltage	IG SW ON	Intake air temperature 20°C (68°F)	0.5 – 3.4 V

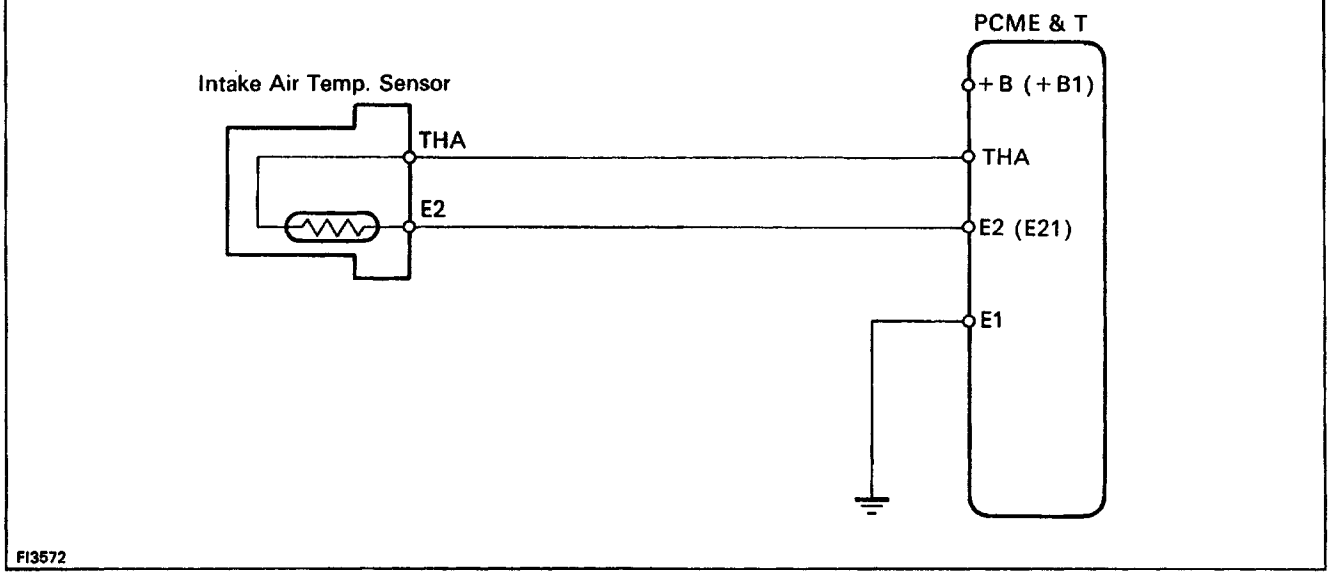

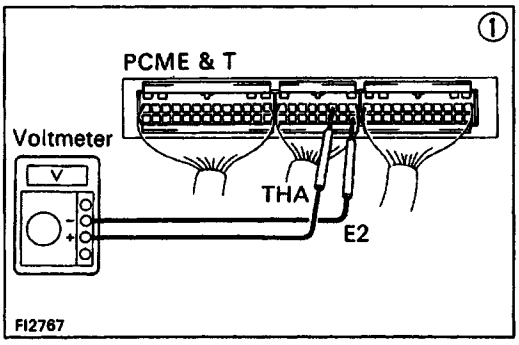

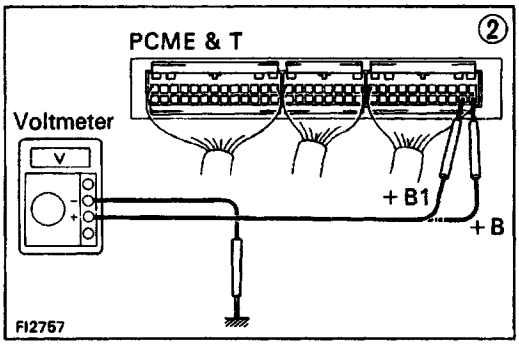

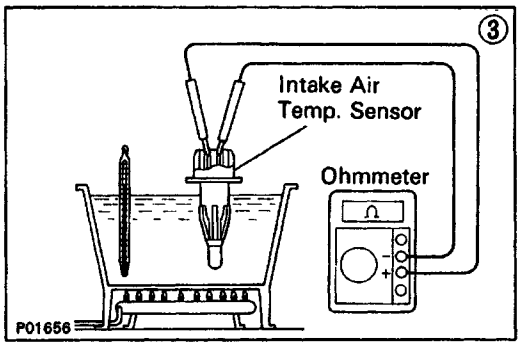

(1) There is no voltage between PCME & T terminals THA and E2. **(IG SW ON)**

↓

(2) Check that there is voltage between PCME & T terminal + B or +B and body ground. **(IG SW ON)**

OK → ↓

NO → Refer to No.1 (See page EG2–236)

↓

Check wiring between PCME & T terminal E1 and body ground.

OK → ↓

BAD → Repair or replace.

↓

(3) Check intake air temp. sensor. (See page EG2–306)

BAD → Replace intake air temp. sensor.

OK → ↓

Check wiring between PCME & T and air temp. sensor.

OK → ↓

BAD → Repair or replace.

↓

Try another PCME & T.

V00939

No.	Terminals	Trouble	Condition		STD voltage
7	THW – E2	No voltage	IG SW ON	Coolant temperature 80°C (176°F)	0.2 – 1.0 V

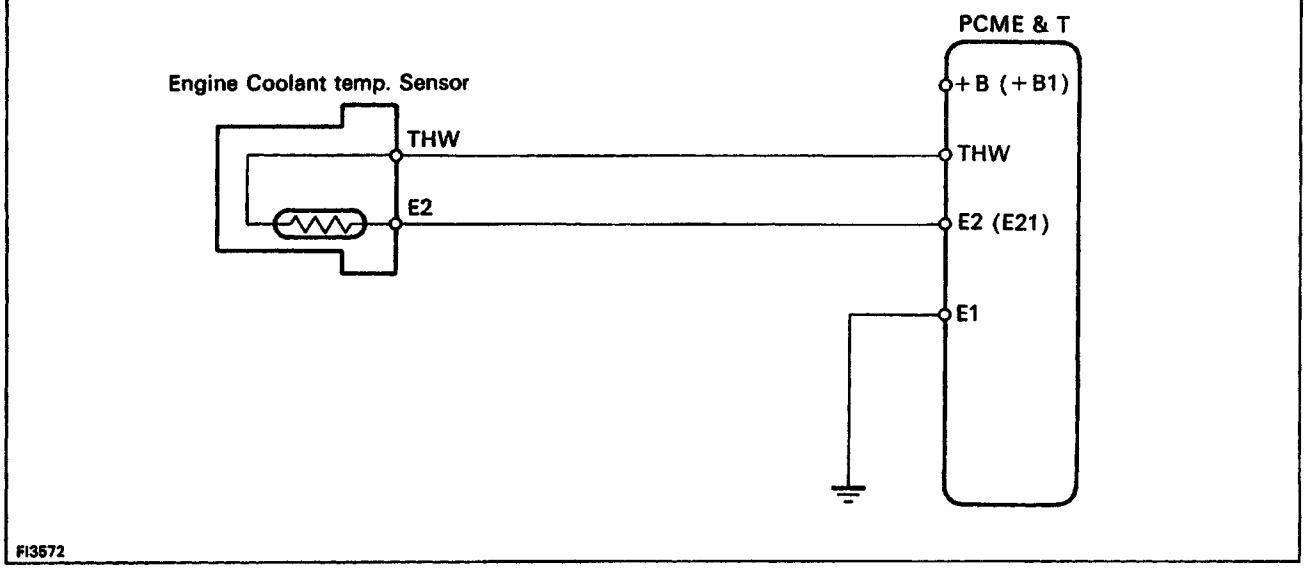

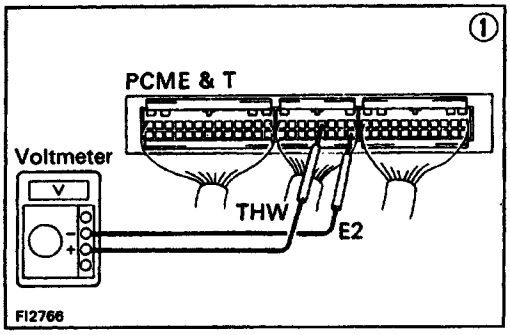

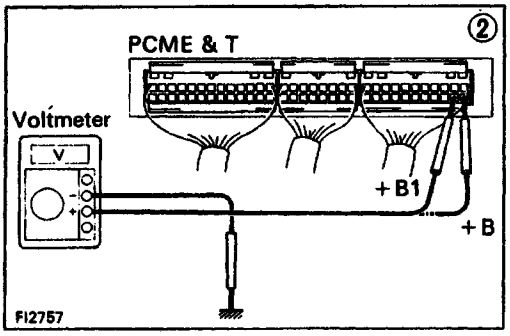

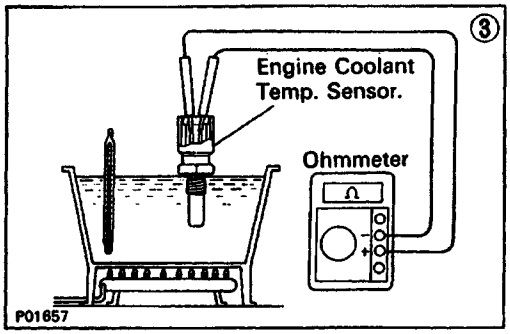

(1) There is no voltage between PCME & T terminals THW and E2. **(IG SW ON)**

↓

(2) Check that there is voltage between PCME & T terminal +B or +B and body ground. (IG SW ON)

OK → ↓

NO → Refer to No.1 (See page EG2–236)

↓

Check wiring between PCME & T terminal E1 and body ground.

OK → ↓

BAD → Repair or replace.

(3) Check engine coolant temp. sensor (See page EG2–305)

BAD → Replace engine coolant temp. sensor.

OK → Check wiring between PCME & T and engine coolant temp. sensor.

OK → Try another PCME & T.

BAD → Repair or replace.

V00940

No.	Terminals	Trouble	Condition	STD voltage
8	STA – E1	No voltage	Cranking	6 V or more

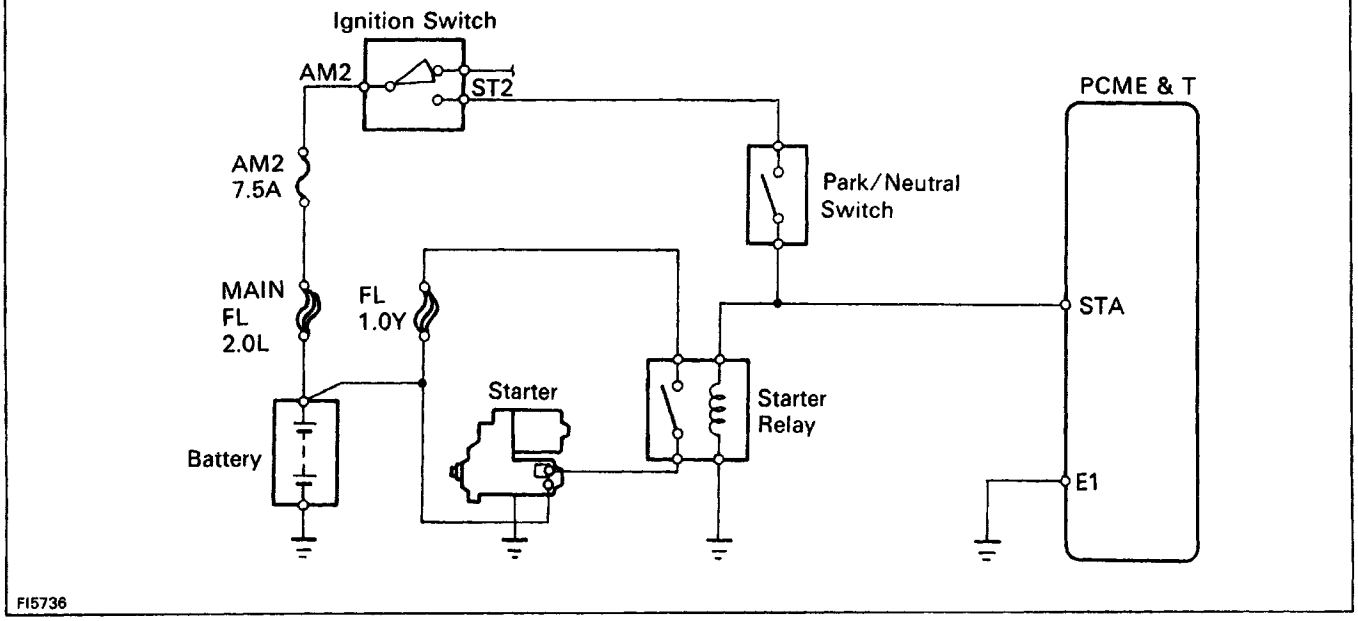

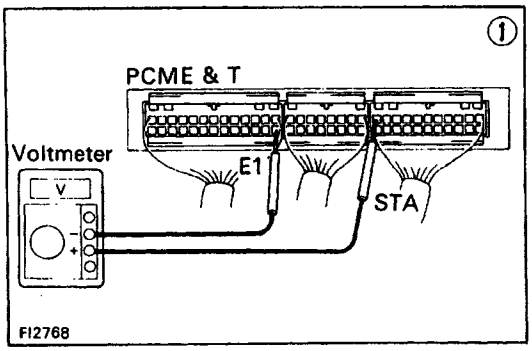

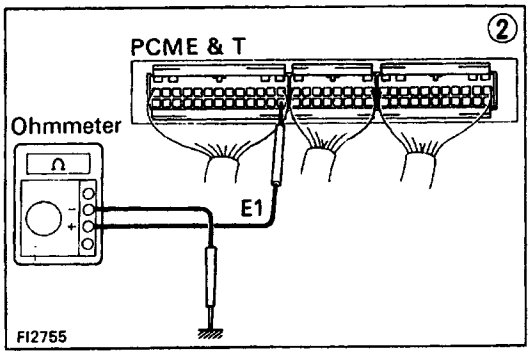

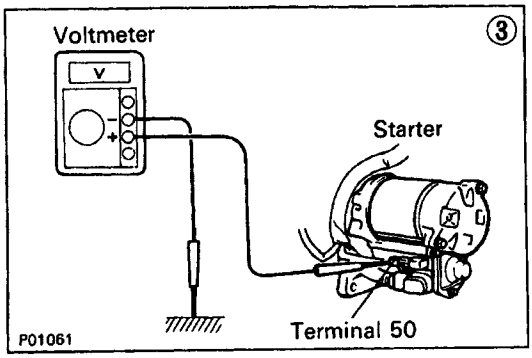

(1) There is no voltage between PCME & T terminals STA and E1.
(IG SW START)

Check starter operation.
- OK → Check wiring between PCME & T terminal STA and ignition switch terminal ST2.
  - OK → (2) Check wiring between PCME & T terminal E1 and body ground.
    - Try another PCME & T.
    - BAD → Repair or replace.
  - BAD → Repair or replace.
- BAD → Check fuse, H–fuse, fusible link, battery, wiring ignition switch and park/neutral switch.
  - BAD → Repair or replace.
  - OK → (3) Check that there is voltage at starter terminal 50.
    (IG SW ON) STD voltage: 6 V or more
    - OK → Check starter.
    - NO → Check wiring between ignition switch terminal ST2 and starter and starter terminal 50.

V00941

No.	Terminals	Trouble	Condition	STD voltage
9	IGT – E1	No voltage	Idling	Pulse generation

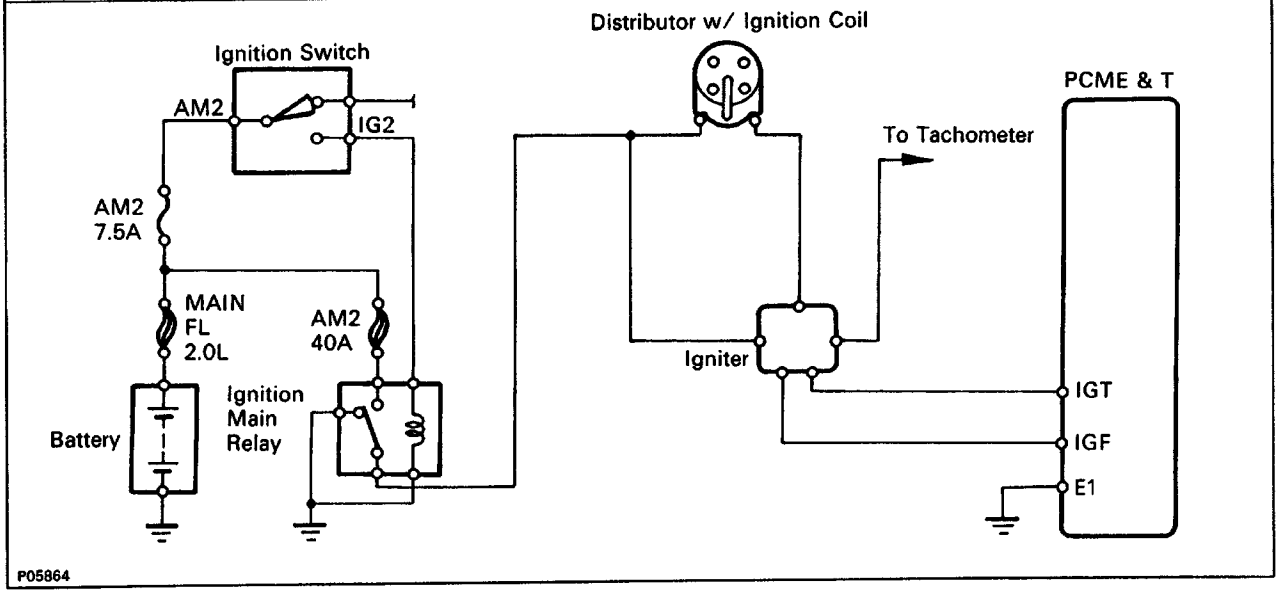

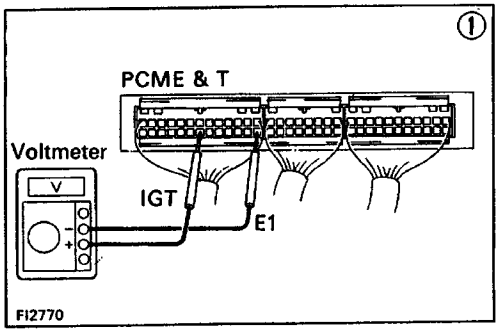

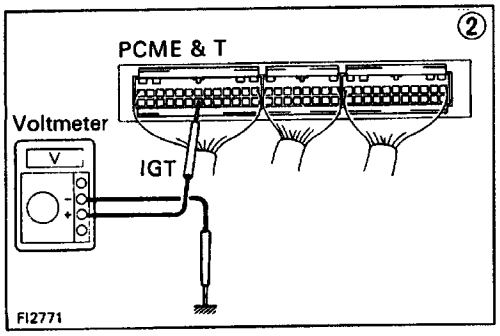

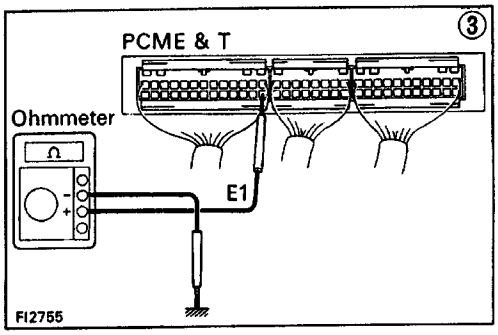

(1) There is no voltage between PCME & T terminals IGT and E1. **(Idling)**

↓

(2) Check that thee is voltage between PCME & T terminal IGT and body ground. **(Idling)**

NO → OK

(3) Check wiring between PCME & T terminal E1 and body ground. — BAD → Repair or Replace.

OK → Try another PCME & T.

↓

Check fuse, H–fuse, fusible link, ignition switch and ignition main relay. — BAD → Repair or replace.

OK ↓

Check distributor. (See IG section) — BAD → Repair or replace.

OK ↓

Check wiring between PCME & T and battery. — BAD → Repair or replace.

OK ↓

Check igniter. (See IG section) — BAD → Repair or replace.

V00942

No.	Terminals	Trouble	Condition	STD voltage
10	ISCO – E1	No voltage	IG SW ON	9 – 14 V

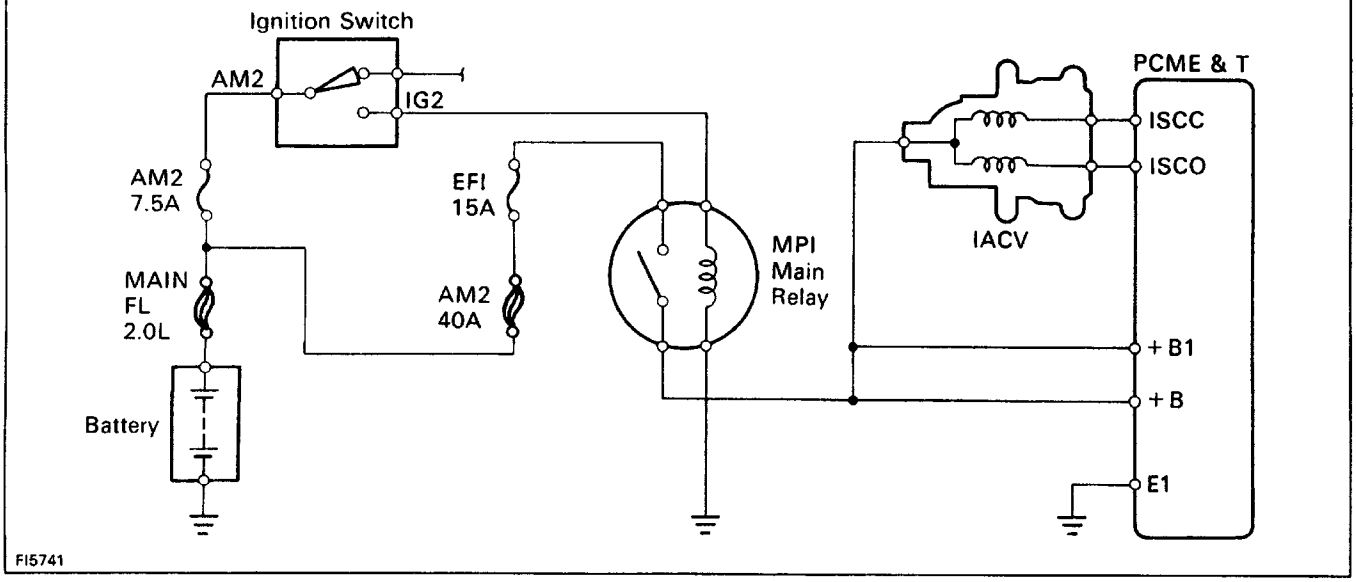

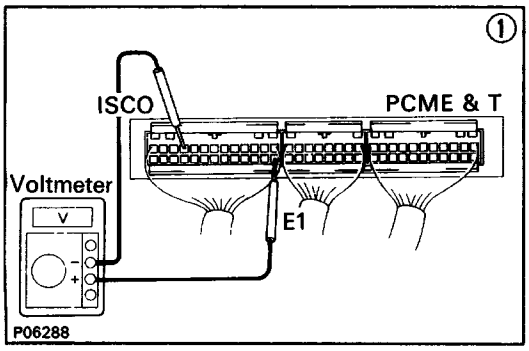

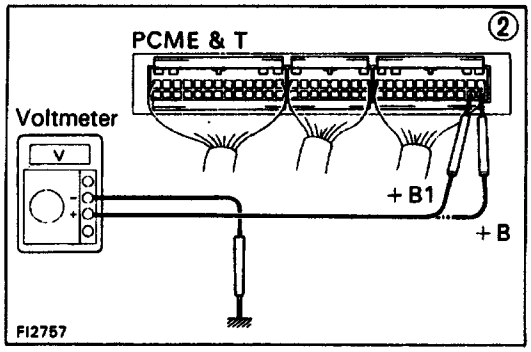

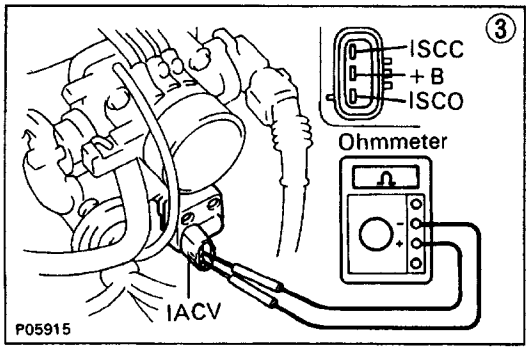

(1) There is no voltage between PCME & T terminals ISCO and E1. **(IG SW ON)**

↓

(2) Check that there is voltage between PCME & T terminal +B or +B and body ground. **(IG SW ON)**

OK ↓

NO → Refer to No.1. (See page EG2–236)

↓

(3) Check resistance between IACV terminals +B and ISCC or ISCO. **STD resistance: 19.3 – 22.3Ω**

BAD → Replace IACV.

OK ↓

Check wiring between PCME & T and IACV.

BAD → Repair or replace wiring.

OK ↓

Try another PCME & T.

V00943

No.	Terminals	Trouble	Condition	STD voltage
11	W – E1	No voltage	No trouble ("CHECK" engine warning light off) and engine running.	9 – 14 V

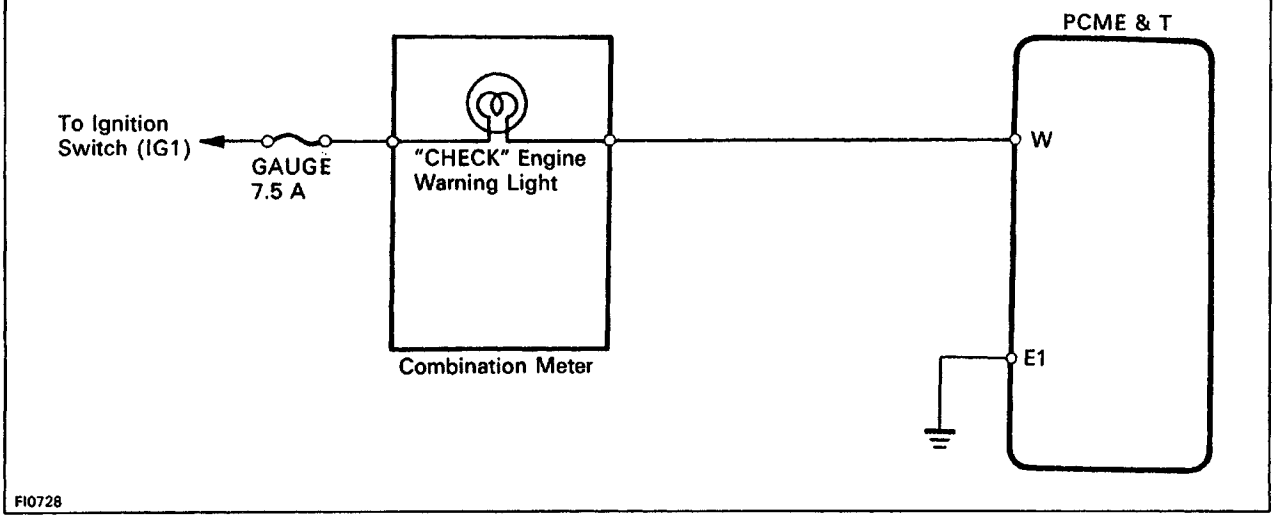

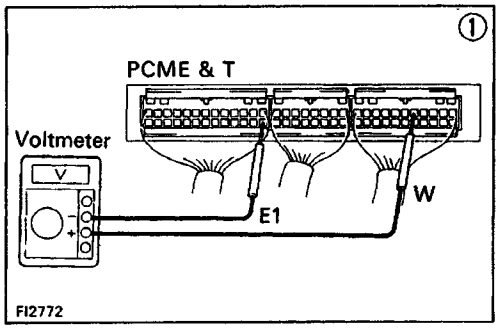

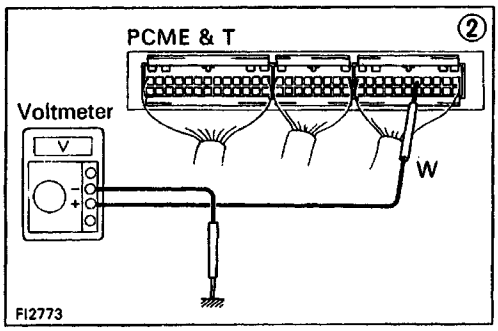

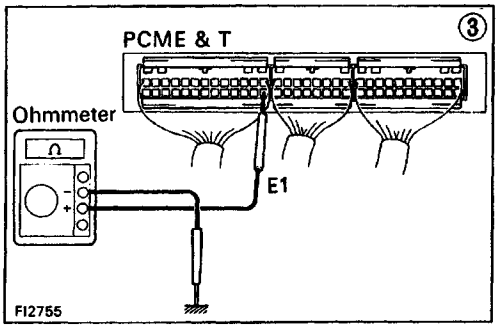

(1) There is no voltage between PCME & T terminals W and E1. **(Idling)**

↓

(2) Check that there is voltage between PCME & T terminal W and body ground.

NO → OK

↓

(3) Check wiring between PCME & T terminal E1 and body ground.

OK → Try another PCME & T.

BAD → Repair or replace.

NO → Check GAUGE fuse (7.5 A) and check engine warning light.

OK → BAD → Repair or replace.

↓

Fuse blows again

↓

Check wiring between PCME & T terminal W and fuse.

BAD → Repair or replace.

V00944

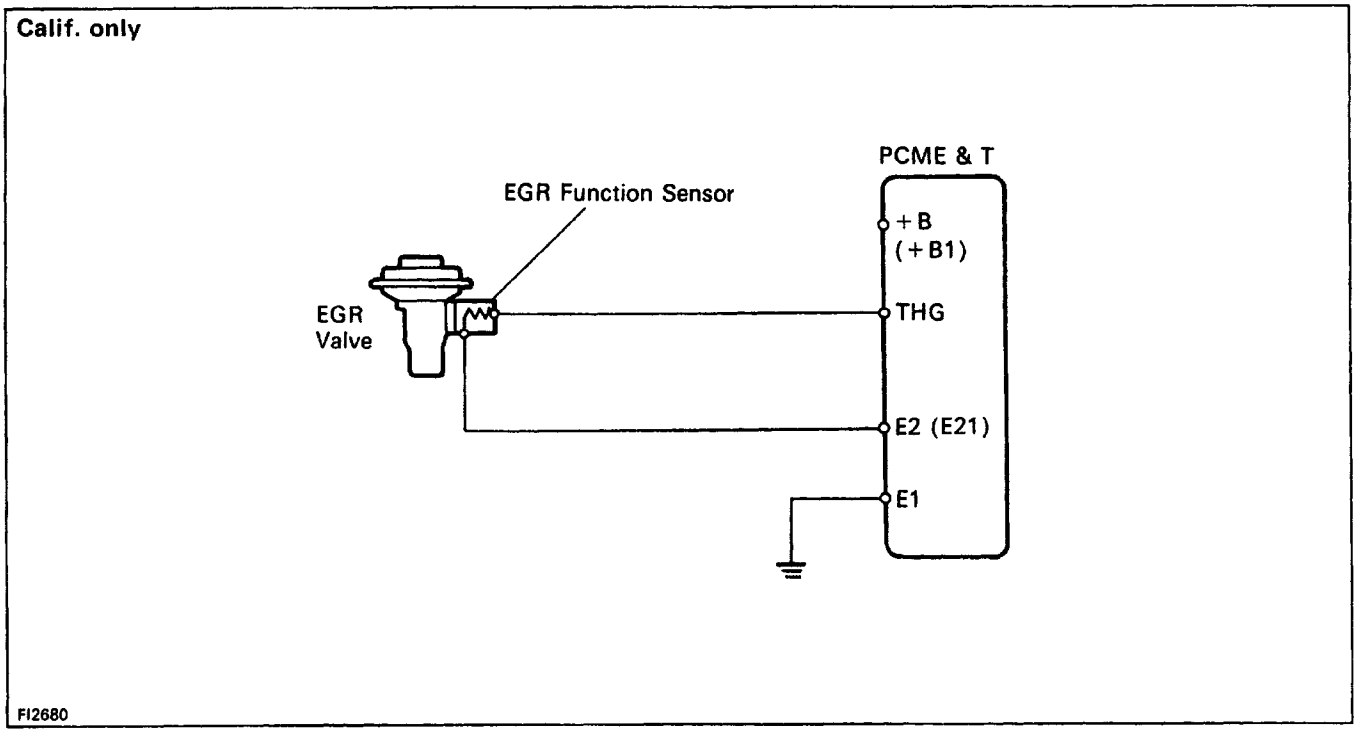

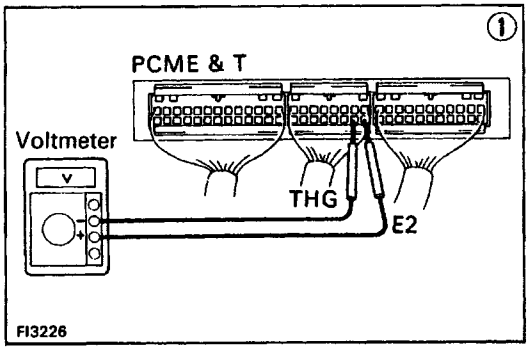

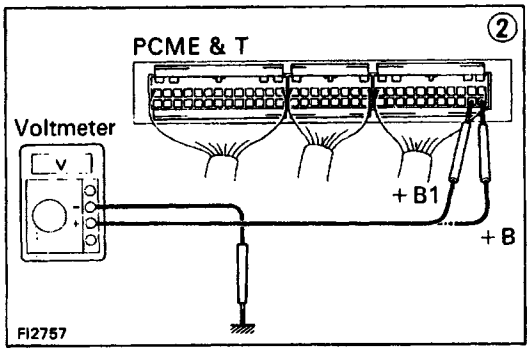

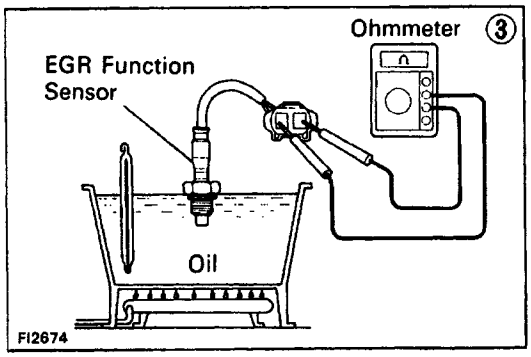

(1)There is no voltage between PCME & T terminals THG and E2. **(IG SW ON)**

↓

(2) Check that there is voltage between PCME & T terminal + B or +B and body ground. **(IG SW ON)**

OK ↓ / NO → Refer to No.1 (See page EG2–236)

↓

Check wiring between PCME & T terminal E1 and body ground.

OK ↓ / BAD → Repair or replace.

↓

Check EGR system. (See page EG2–173) — BAD → Repair or replace.

OK ↓

Check EGR function sensor. (See page EG2–321)

BAD → Replace EGR function sensor.

OK → Check wiring between PCME & T and EGR sensor.

OK → Try another PCME & T.

BAD → Repair or replace.

V00948

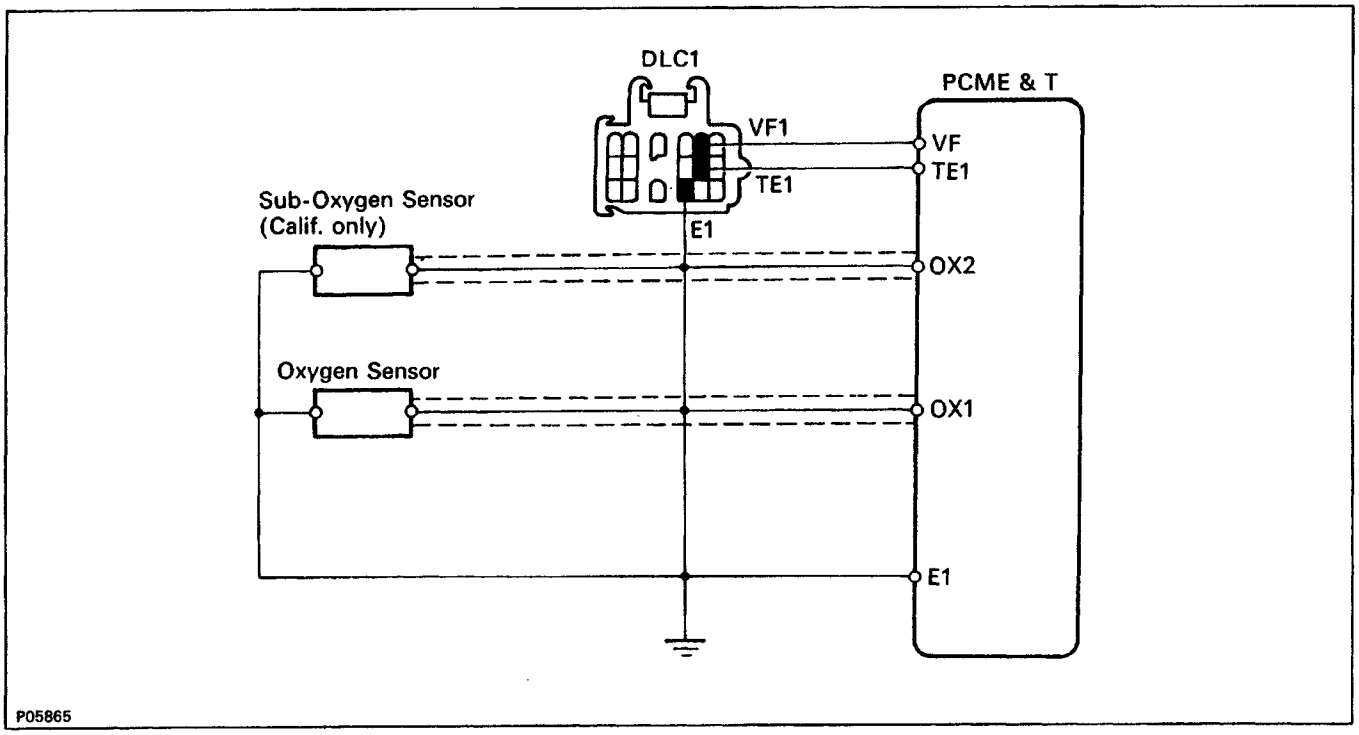

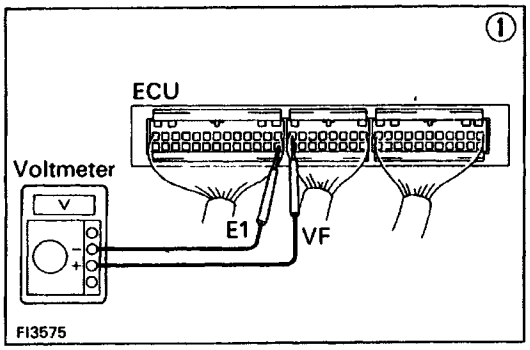

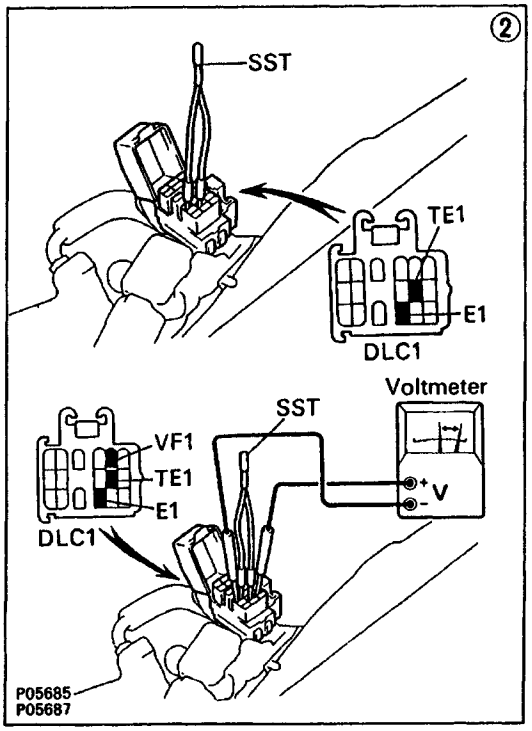

(1) There is no voltage between PCME & T terminals VF and E1.

Check that there is specified voltage between PCME & T terminal VF and body ground.

NO → OK: Check wiring between PCME & T terminal E1 and body ground.

OK → Try another PCME & T.

BAD → Repair or replace.

Check for suction of air into exhaust system. BAD → Repair air suction.

OK

Check for air leak from air intake system. BAD → Repair air leak.

OK

Check spark plugs. BAD → Repair or replace.

OK

Check distributor w/ ignition coil and ignition system. BAD → Repair or replace.

OK

Check fuel pressure. BAD → Repair or replace.

OK

Check injectors. BAD → Repair or replace.

OK

Check manifold absolute pressure sensor. BAD → Repair or replace.

OK

Check operation of oxygen sensors. OK → System normal.

BAD

Check wiring between oxygen sensors and PCME & T connectors. BAD → Repair wiring

OK

Repair oxygen sensors.

V00949

VSV
(For Fuel Pressure)

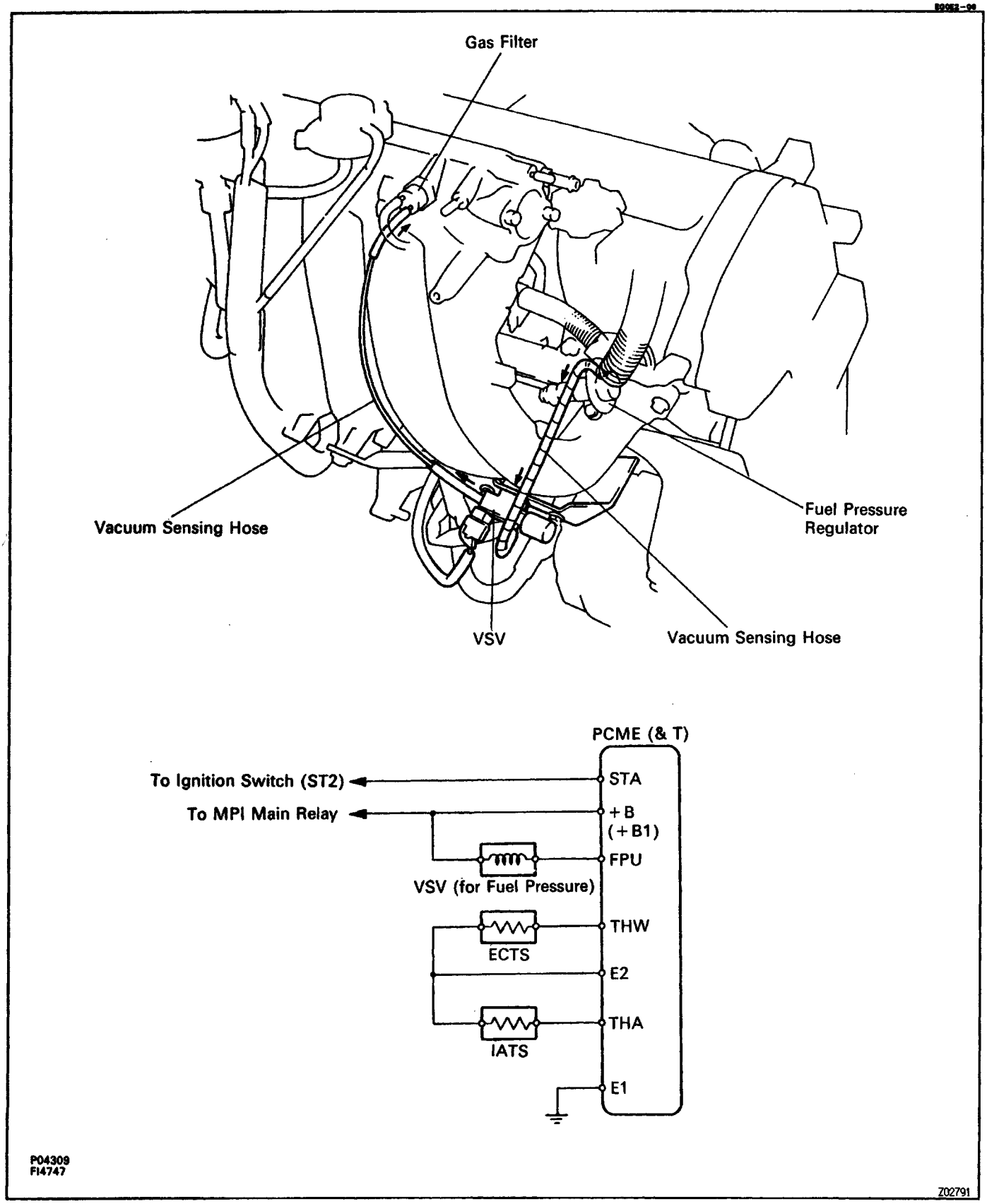

EG0E2–07

COMPONENTS FOR REMOVAL AND INSTALLATION

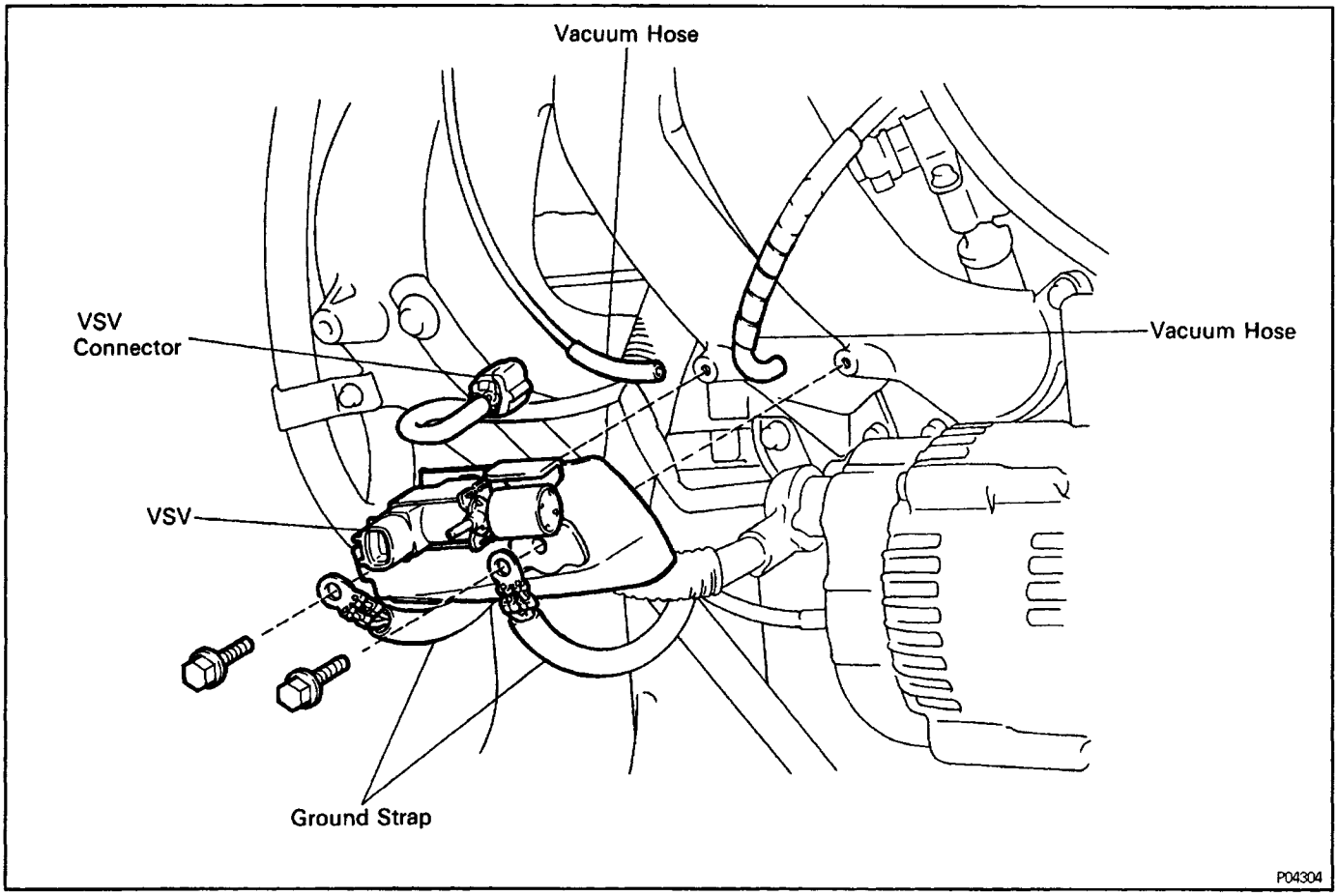

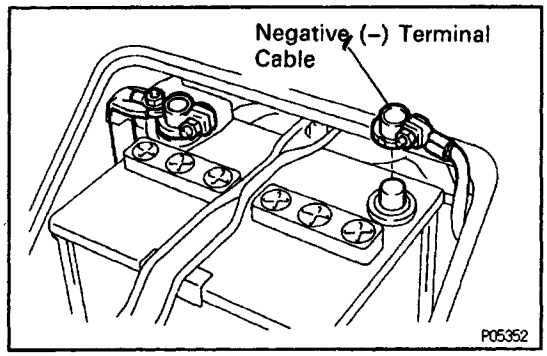

EG14B–01

VSV INSPECTION

(See Components for Removal and Installation)

1. DISCONNECT CABLE FROM NEGATIVE TERMINAL OF BATTERY

CAUTION: Turn the ignition switch to 'LOCK'. Disconnect the negative terminal from the battery. Wait at least 20 seconds before proceeding with work.

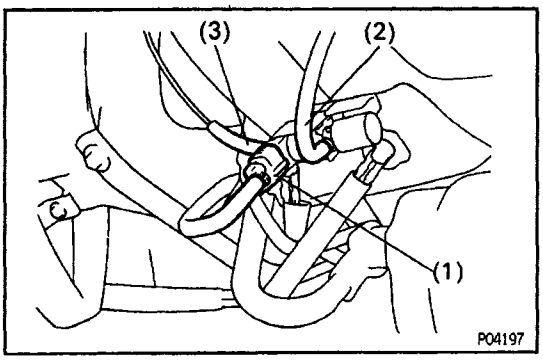

2. REMOVE VSV

(a) Disconnect the following connector and hoses:

(1) VSV connector

(2) Vacuum hose (from fuel pressure regulator) from port E of VSV

(3) Vacuum hose (from gas filter)from port G of VSV

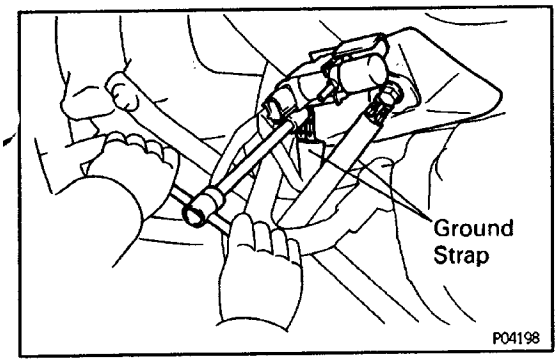

(b) Remove the two bolts and VSV. Disconnect the two ground straps.

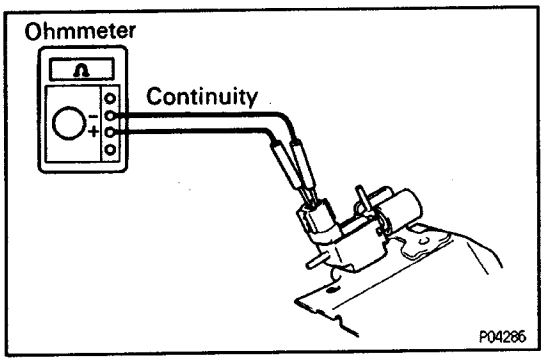

3. INSPECT VSV

A. Inspect VSV for open circuit

Using an ohmmeter, check that there is continuity between the terminals.

Resistance (Cold):

37–44Ω

If there is no continuity, replace the VSV.

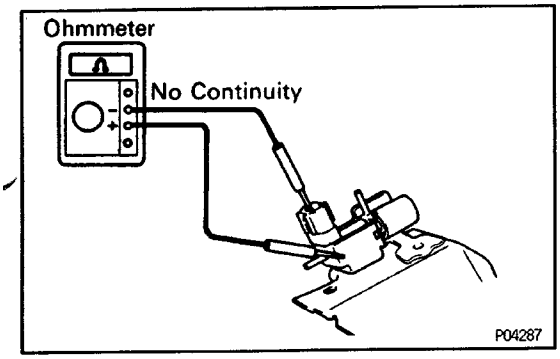

B. Inspect VSV for ground

Using an ohmmeter, check that there is no continuity between each terminal and the body.

If there is continuity, replace the VSV.

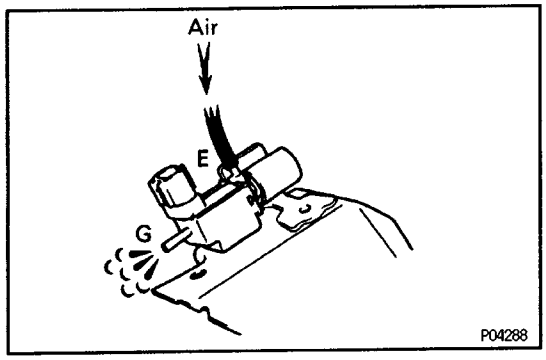

C. Inspect VSV operation

(a) Check that the air flows from port E to port G.

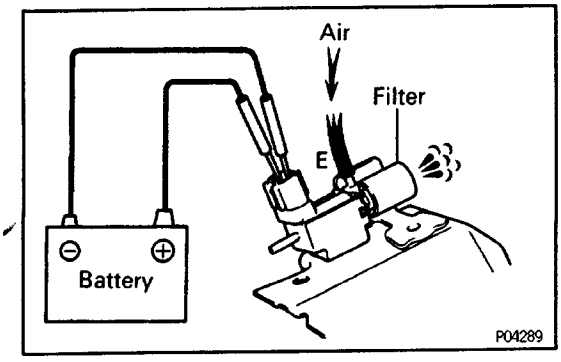

(b) Apply battery voltage across the terminals.

(c) Check that the air flows from port E to the filter.

If operation is not as specified, replace the VSV.

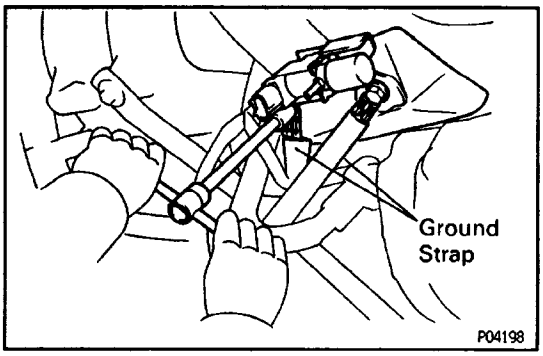

4. REINSTALL VSV

(a) Install the VSV with the bolt. Connect the two ground straps.

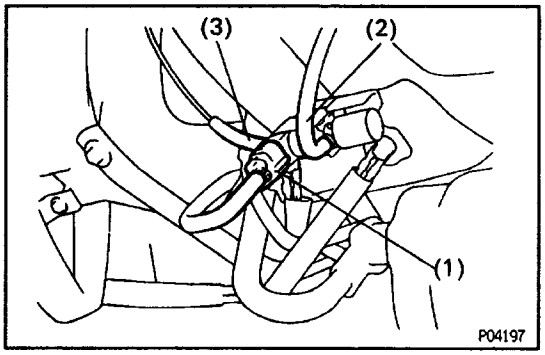

(b) Connect the following connector and hoses:
(1) VSV connector
(2) Vacuum hose (from fuel pressure regulator) from port E of VSV
(3) Vacuum hose (from gas filter)from port G of VSV

5. RECONNECT CABLE TO NEGATIVE TERMINAL OF BATTERY

VSV
(For EGR)

EG0E2–08

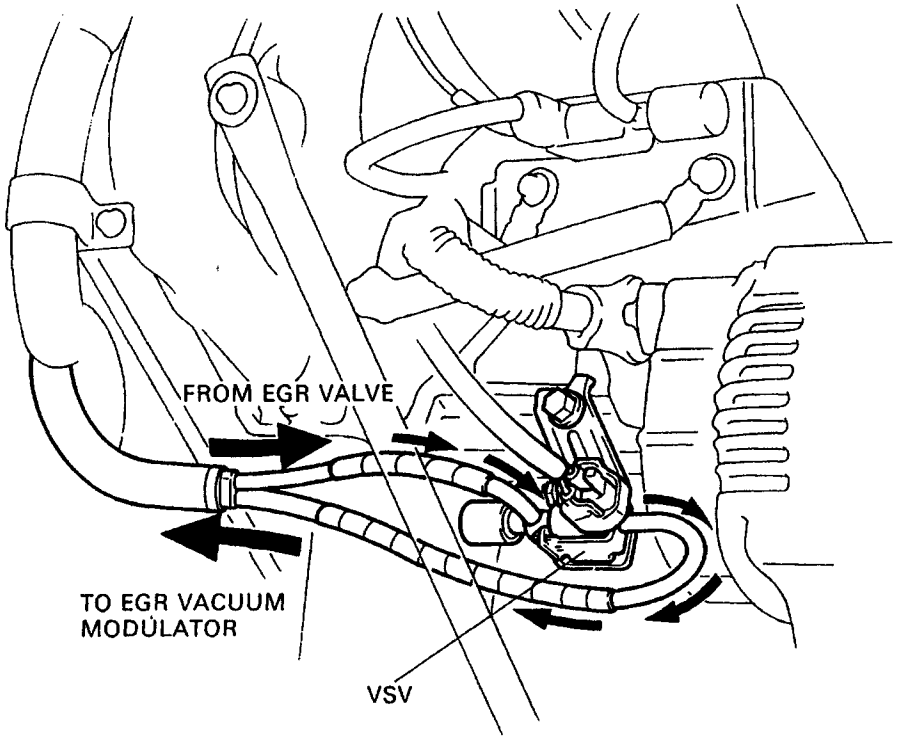

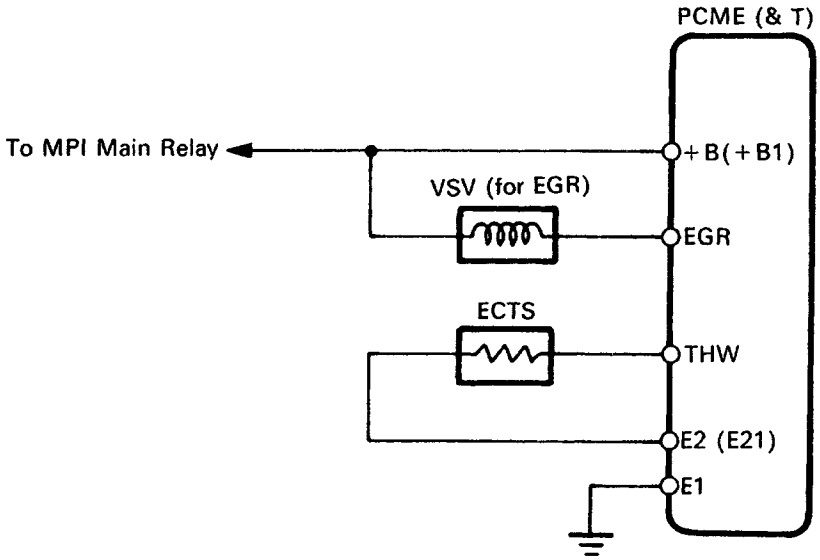

P06016
FI4901

Z02943

COMPONENTS FOR REMOVAL AND INSTALLATION

EG14F–01

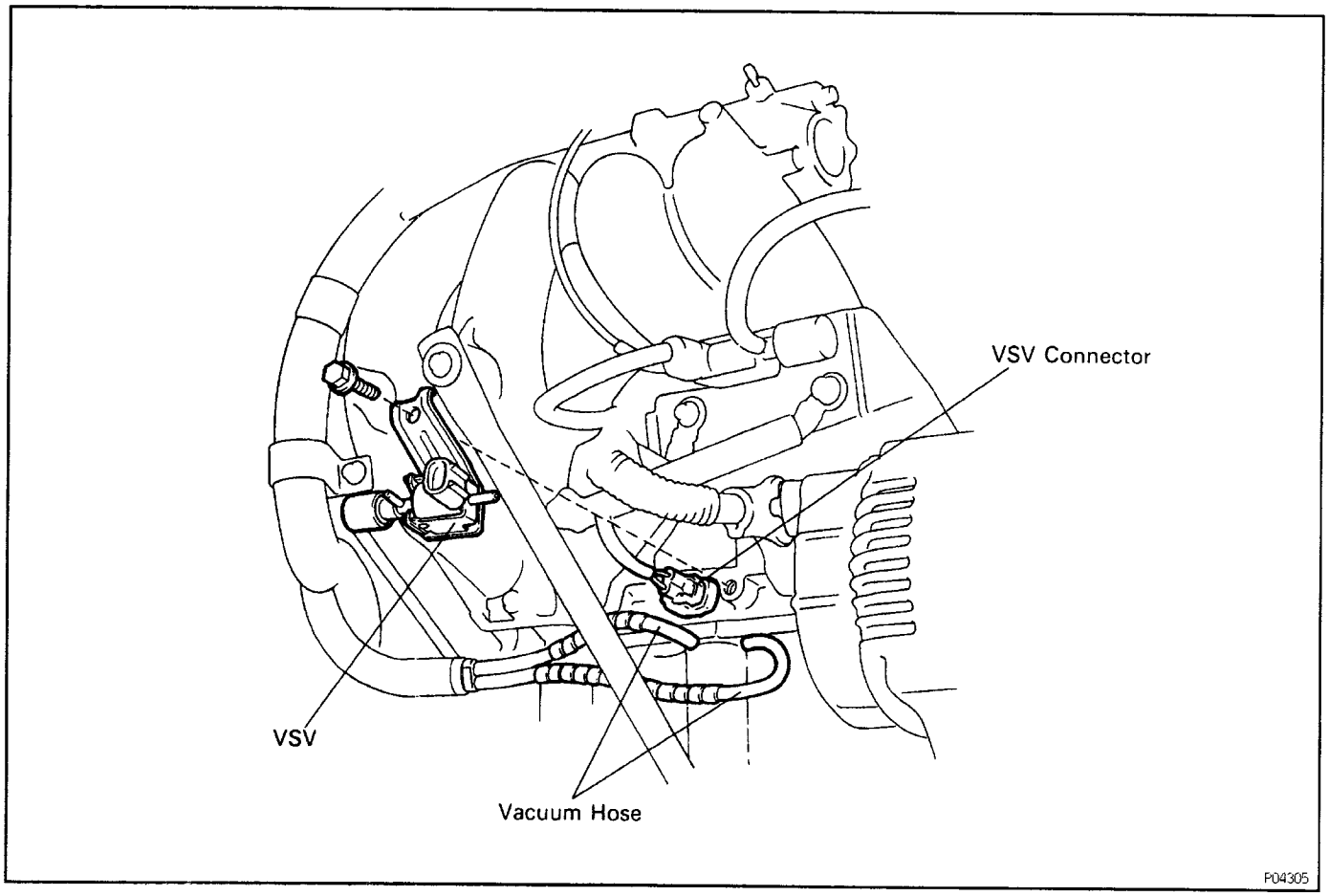

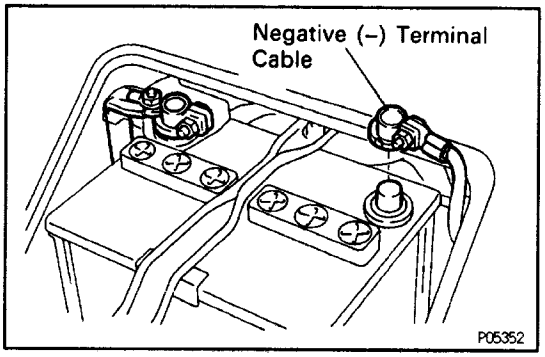

VSV INSPECTION

EG14H–01

(See Components for Removal and Installation)

1. DISCONNECT CABLE FROM NEGATIVE TERMINAL OF BATTERY

CAUTION: Turn the ignition switch to ”LOCK”. Disconnect the negative terminal from the battery. Wait at least 20 seconds before proceeding with work.

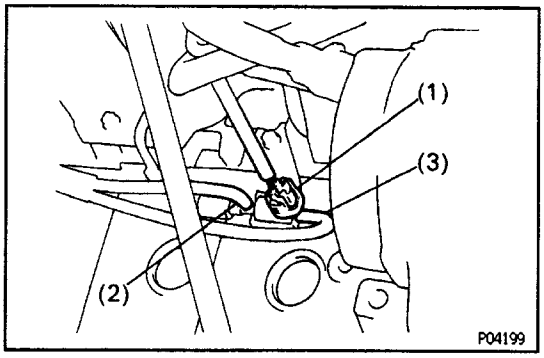

2. REMOVE VSV

(a) Disconnect the following connector and hoses:

(1) VSV connector

(2) Vacuum hose (from EGR valve) from port E of VSV

(3) Vacuum hose (from port ”Q” of EGR vacuum modulator) from port G of VSV

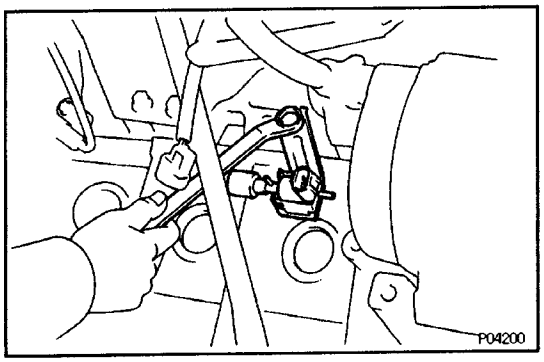

(b) Remove the bolt and VSV.

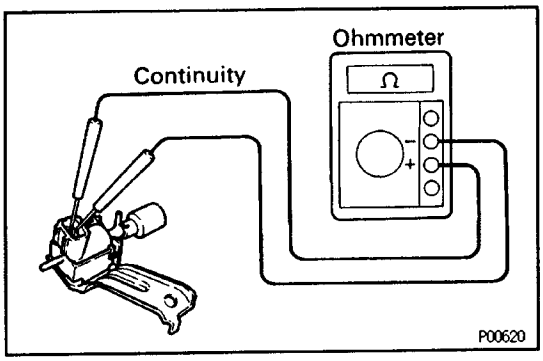

3. INSPECT VSV

A. Inspect VSV for open circuit

Using an ohmmeter, check that there is continuity between the terminals.

Resistance (Cold):

33–39Ω

If there is no continuity, replace the VSV.

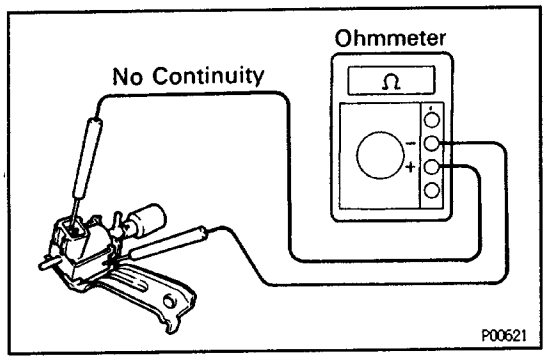

B. Inspect VSV for ground

Using an ohmmeter, check that there is no continuity between each terminal and the body.

If there is continuity, replace the VSV.

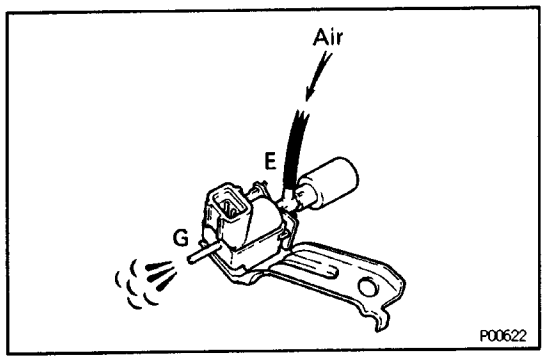

C. Inspect VSV operation

(a) Check that the air flows from port E to port G.

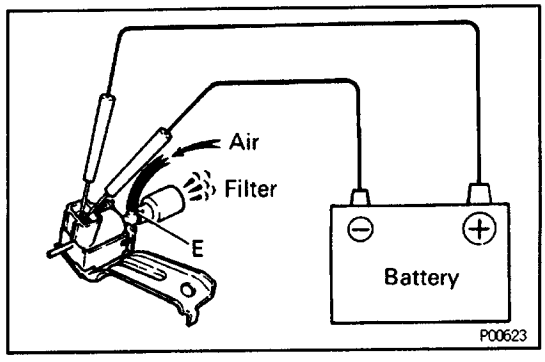

(b) Apply battery voltage across the terminals.

(c) Check that the air flows from port E to the filter.

If operation is not as specified, replace the VSV.

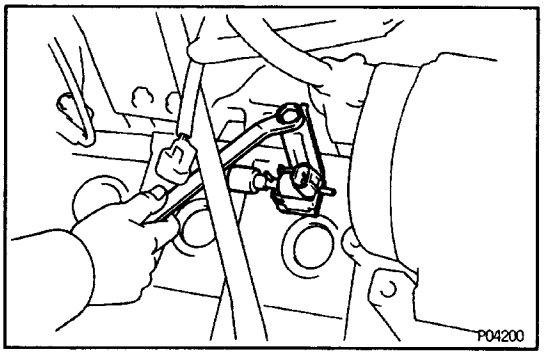

4. REINSTALL VSV

(a) Install the VSV with the bolt.

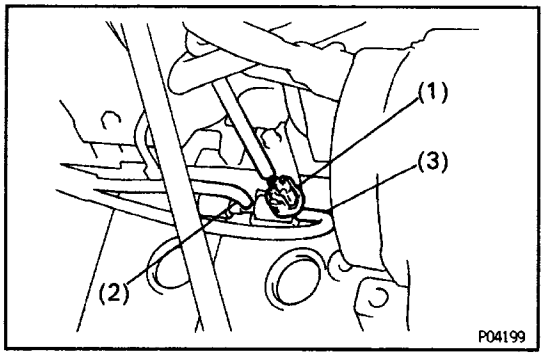

(b) Connect the following connector and hoses:
(1) VSV connector

5. RECONNECT CABLE TO NEGATIVE TERMINAL 4F BATTERY

IGNITION SYSTEM

(3S–GTE)

DESCRIPTION

The PCME is programmed with data for optimum ignition timing under any and all operating conditions. Using data provided by sensors which monitor various engine functions (rpm, intake air volume, eng, temperature, etc.), the microcomputer (PCME) triggers the spark at precisely the right instant.

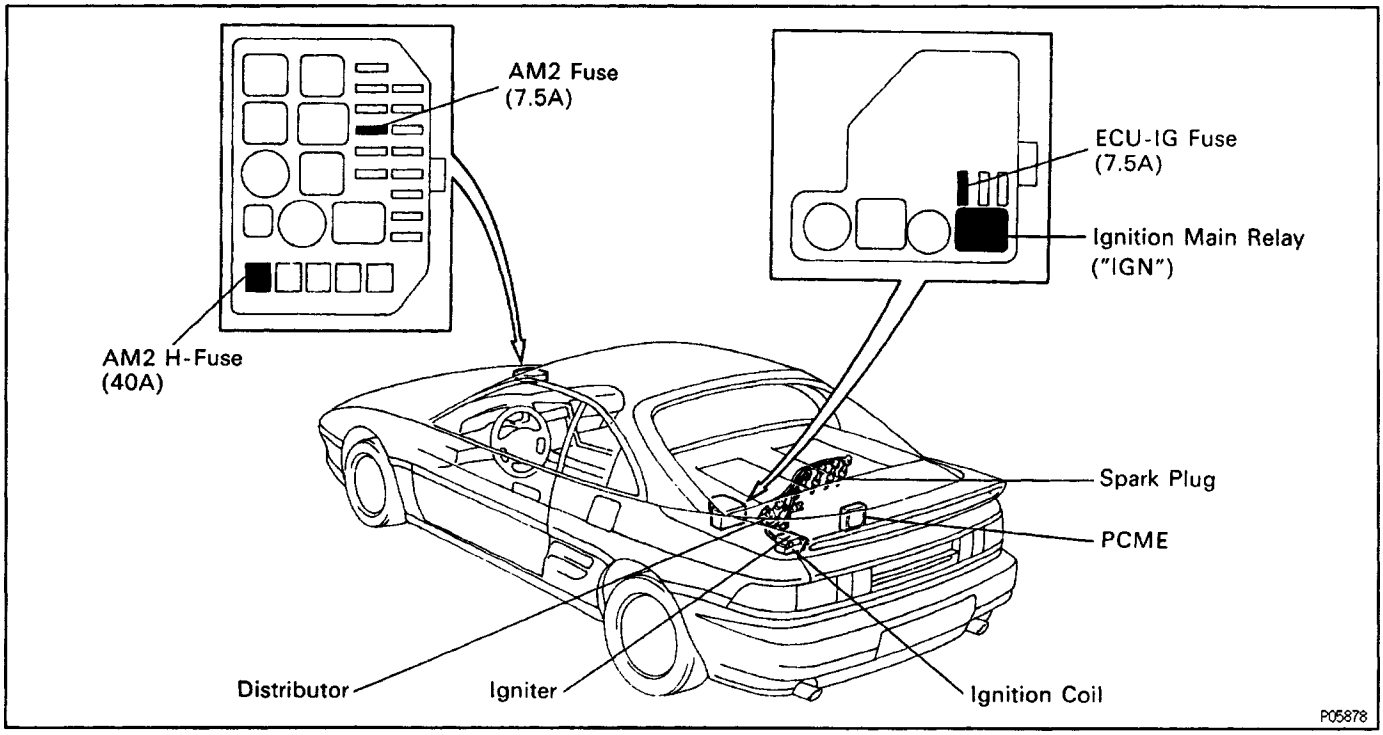

The PCME monitors the engine condition by signals from each sensor, calculates the ignition timing and sends an ignition signal to the igniter. High voltage from the ignition is distributed to each spark plug in the appropriate order to generate a spark between the electrodes, which ignites the air–fuel mixture.

IGNITER

The igniter temporarily interrupts the primary current with the ignition signal (IGT signal) from the PCME and generates sparks at the spark plug. Also, as a fail–safe measure, when ignition occurs an ignition confirmation signal (IGF signal) is sent to the PCME.

IGNITION COIL

The ignition coil uses a closed core coil with the primary coil wrapped around the core and the secondary coil wrapped around the primary coil. This allows the generation of a high voltage sufficient to cause a spark to jump across the spark plug gap.

DISTRIBUTOR

This correctly distributes high voltage to the spark plug of each cylinder in the specified ignition order.

PICKUP COILS

The NE coil detects the crank angle, and the G1 and G2 coils detect the cam angle.

DISTRIBUTOR

IG01K–02

COMPONENTS FOR REMOVAL AND INSTALLATION

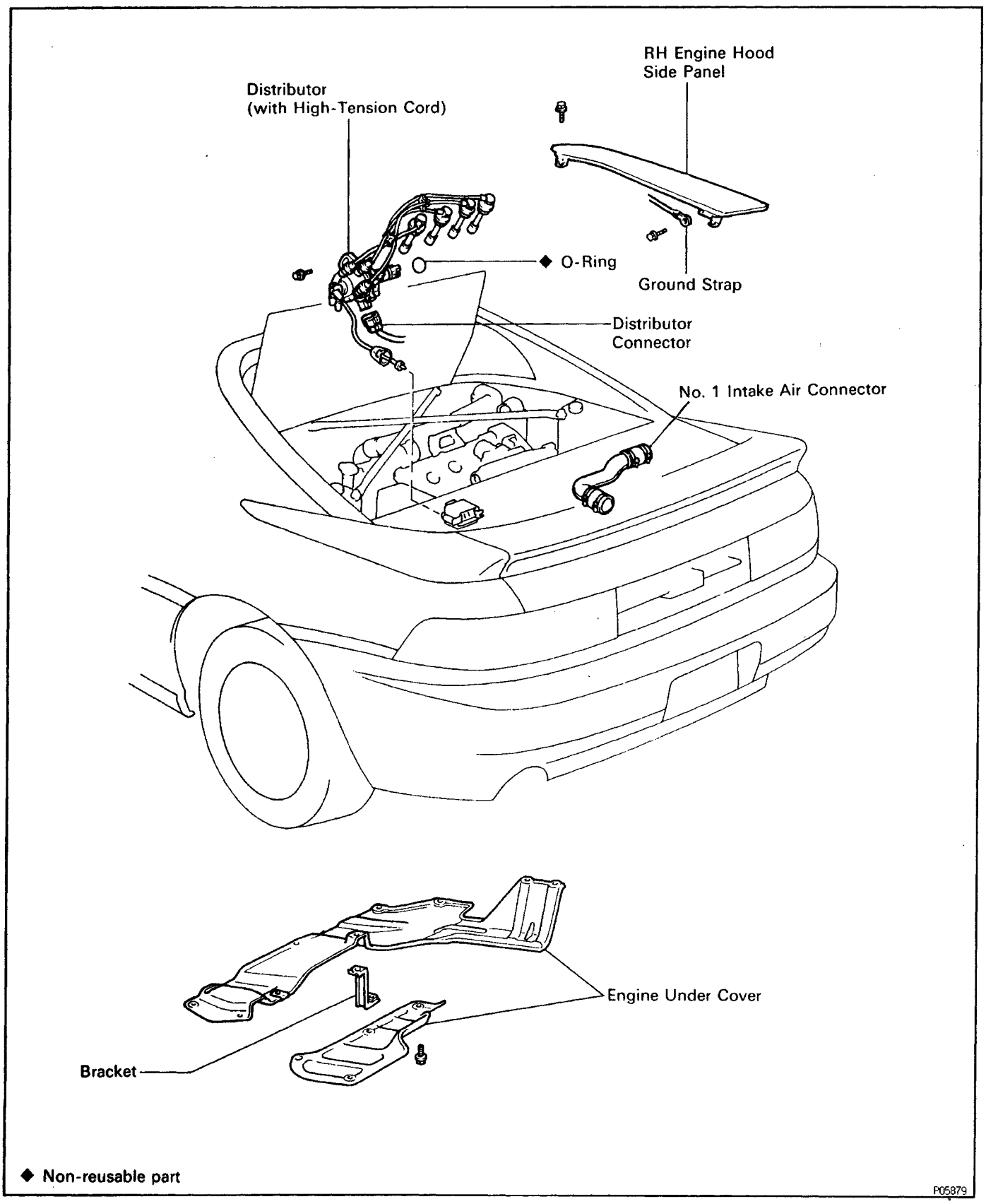

◆ Non-reusable part

P05879

IG03M – 01

DISTRIBUTOR REMOVAL

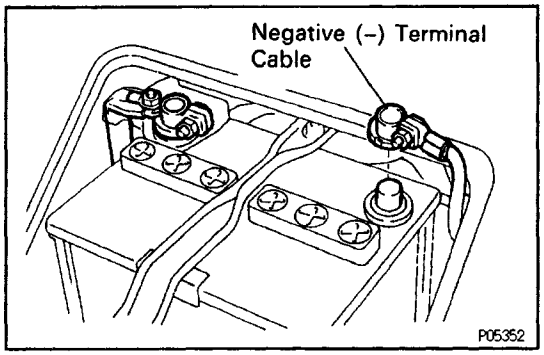

(See Components for Removal and Installation)

1. DISCONNECT CABLE FROM NEGATIVE TERMINAL OF BATTERY

CAUTION: Turn the ignition switch to “LOCK”. Disconnect the negative terminal from the battery. Wait at least 20 seconds before proceeding with work.

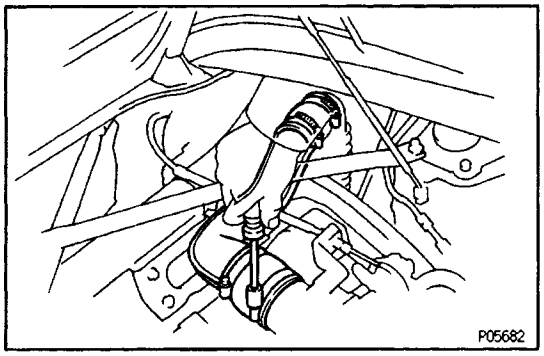

2. REMOVE N0.1 INTAKE AIR CONNECTOR

3. DISCONNECT DISTRIBUTOR CONNECTOR

4. DISCONNECT HIGH–TENSION CORD FROM IGNITION COIL

5. DISCONNECT HIGH–TENSION CORDS FROM SPARK PLUGS

(a) Disconnect the high–tension cords from the cord clamps.

(b) Disconnect the four high–tension cords from the spark plugs.

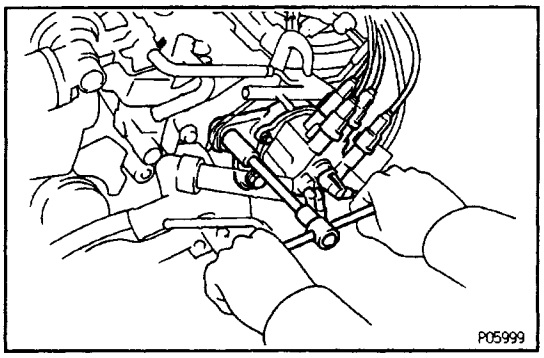

6. REMOVE DISTRIBUTOR

(a) Remove the two mounting bolts, and pull out the distributor.

(b) Remove the O–ring from the distributor housing.

COMPONENTS FOR DISASSEMBLY AND ASSEMBLY

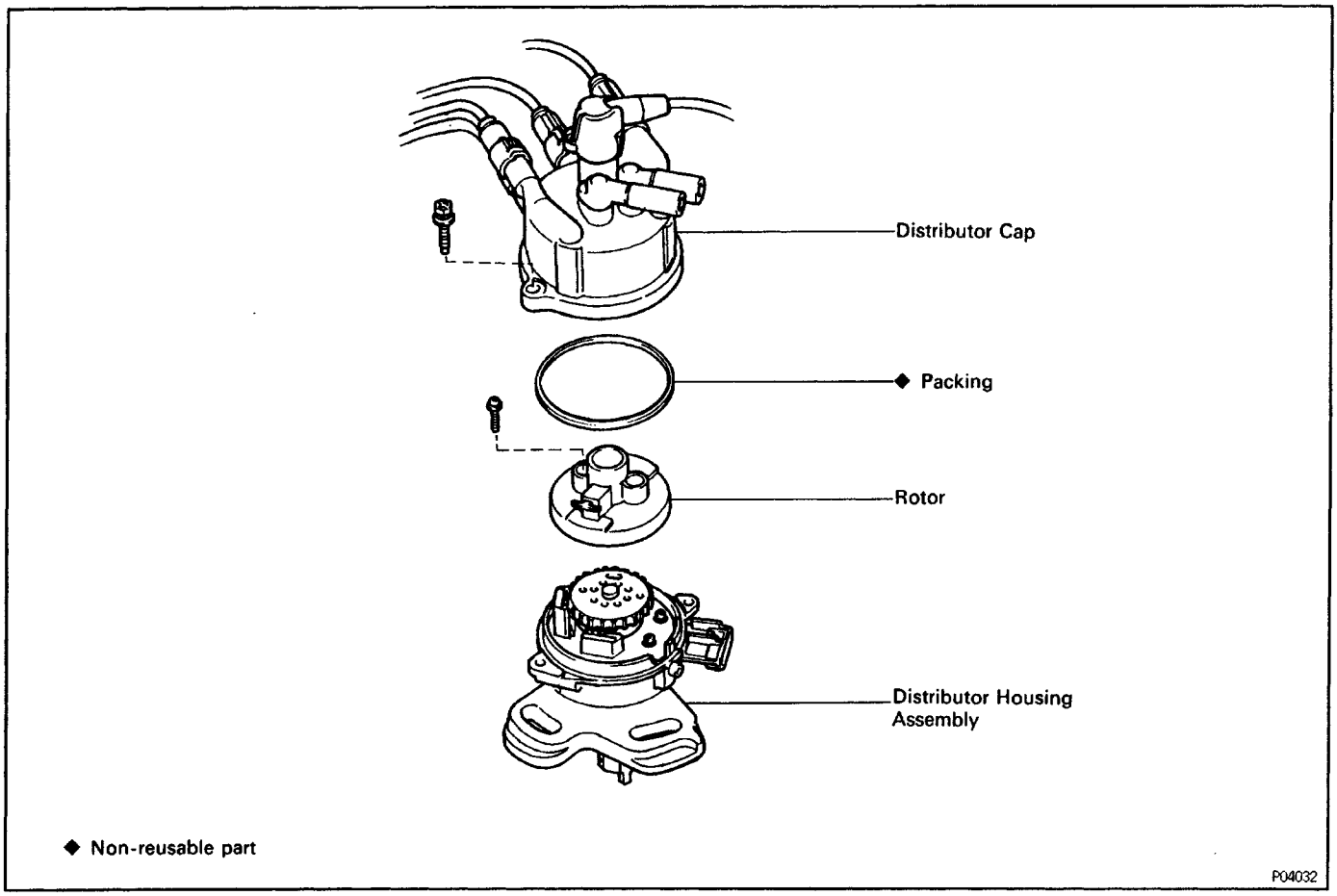

IG03N–01

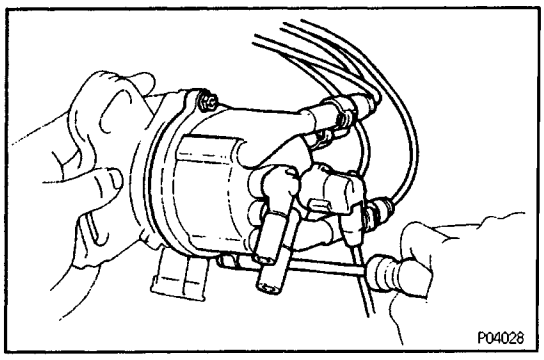

DISTRIBUTOR DISASSEMBLY

(See Components for Disassembly and Assembly)

1. REMOVE DISTRIBUTOR CAP

Remove the two bolts, distributor cap and packing.

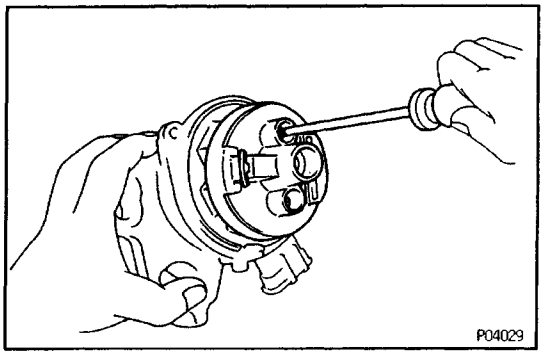

2. REMOVE ROTOR

Remove the two screws and rotor.

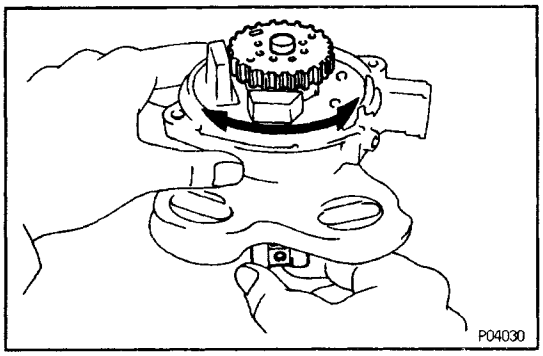

IG013-02

DISTRIBUTOR INSPECTION

INSPECT SHAFT

Turn the shaft and check that it is not rough or worn. If it feels rough or worn, replace the distributor housing assembly.

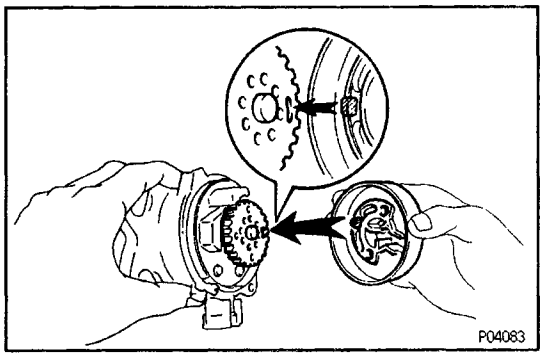

IG01M-03

DISTRIBUTOR ASSEMBLY

(See Components for Disassembly and Assembly)

1. INSTALL ROTOR

(a) Align the hollow of the signal rotor with the protrusion of the rotor.

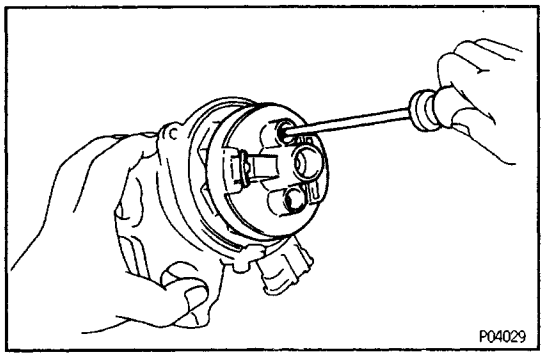

(b) Install the rotor with the two screws.

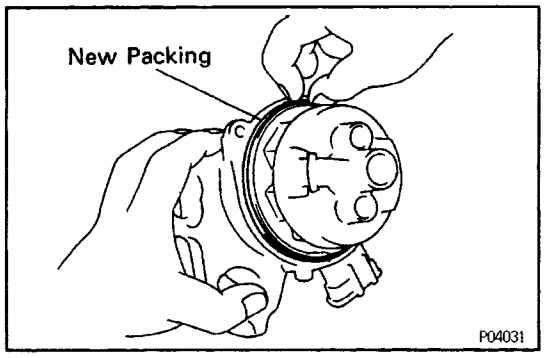

2. INSTALL DISTRIBUTOR CAP

(a) Install a new packing to the distributor housing.

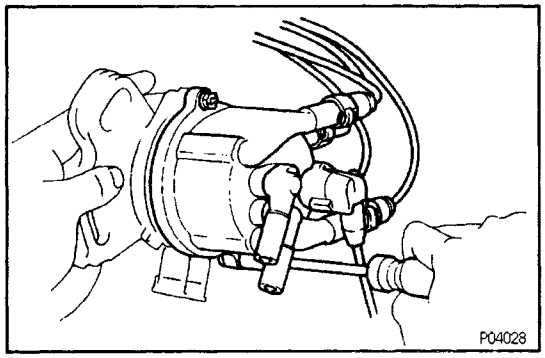

(b) Install the distributor cap with the two bolts.

IGGP–01

DISTRIBUTOR INSTALLATION

(See Components for Removal and Installation)

1. REMOVE ENGINE UNDER COVERS

2. REMOVE RH ENGINE HOOD SIDE PANEL

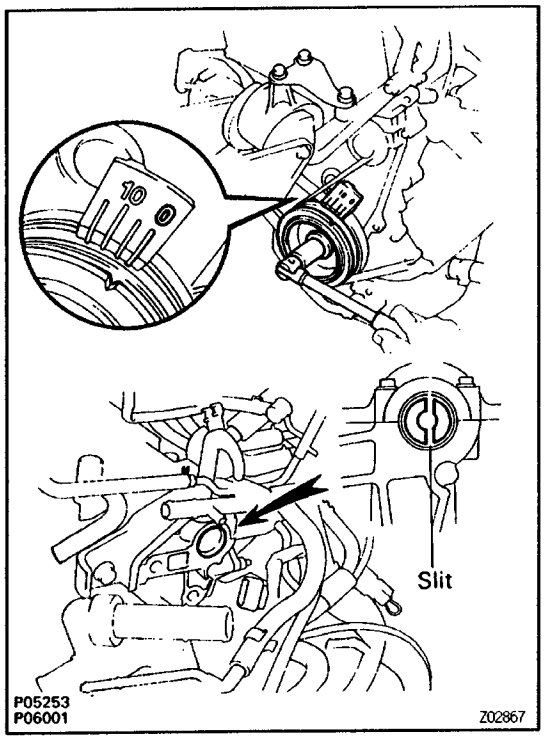

3. SET NO.1 CYLINDER TO TDC/COMPRESSION

Turn the crankshaft clockwise, and position the slit of the intake camshaft as shown in the illustration.

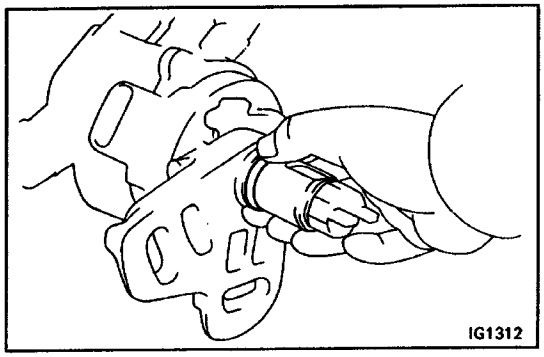

4. INSTALL DISTRIBUTOR

(a) Install a new O–ring to the distributor housing.

(b) Apply a light coat of engine oil on the 0– ring.

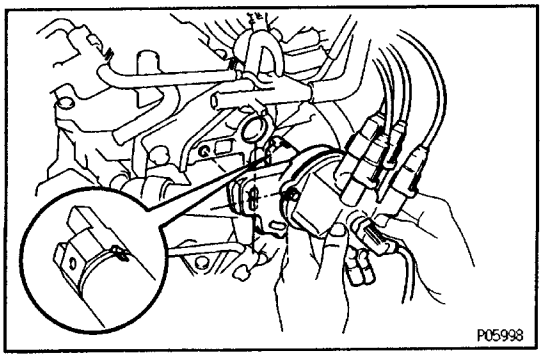

(c) Align the cutout portion of the coupling with the groove of the housing.

(d) Insert the distributor, aligning the center of the flange with that of the bolt hole on the cylinder head.

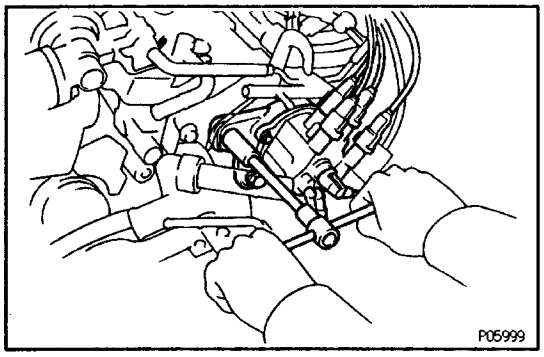

(e) Lightly tighten the two mounting bolts.

5. CONNECT HIGH–TENSION CORDS TO SPARK PLUGS

(a) Connect the four high–tension cords to the spark plugs.
Firing order:
1–3–4–2

(b) Install the four high – tension cords to the cord clamps.

6. CONNECT HIGH–TENSION CORD TO IGNITION COIL

7. CONNECT DISTRIBUTOR CONNECTOR

8. INSTALL NO.1 INTAKE AIR CONNECTOR

9. CONNECT CABLE TO NEGATIVE TERMINAL OF BATTERY

10. WARM UP ENGINE

Allow the engine to warm up to normal operating temperature.

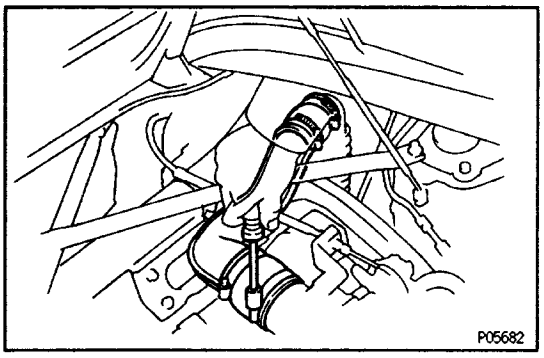

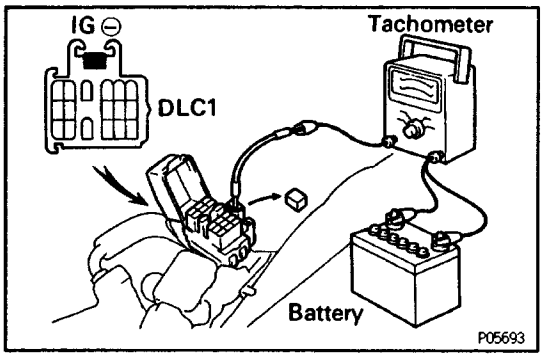

11. CONNECT TACHOMETER AND TIMING LIGHT TO ENGINE

Connect the test probe of a tachometer to terminal IG (–)of the data link connector 1.

NOTICE:

- **Never allow the tachometer terminal to touch ground as it could result in damage to the ignite and/or ignition coil.**
- **As some tachometers are not compatible with this ignition system, we recommend that you confirm the compatibility of your unit before use.**

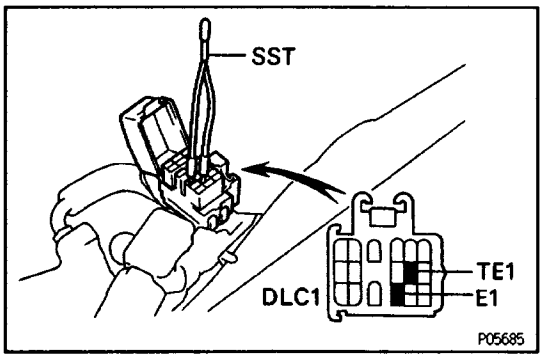

12. ADJUST IGNITION TIMING

(a) Using SST, connect terminals TE1 and E1 of the data link connector 1.
SST 09843–18020

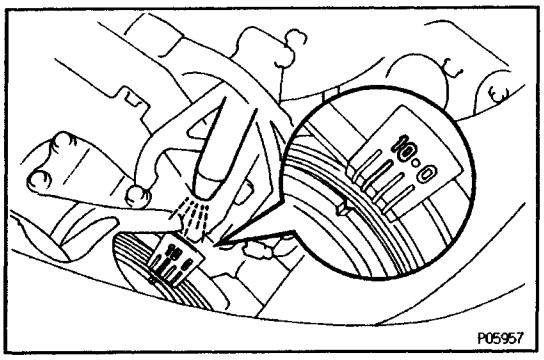

(b) Using a timing light, check the ignition timing.
Ignition timing:
10˚ BTDC @ idle
(Transmission in neutral position)

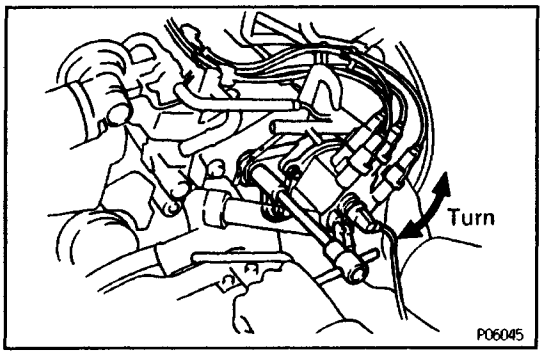

(c) Loosen the two mounting bolts, and adjust by turning the distributor.
(d) Tighten the mounting bolts, and recheck the ignition timing.

Torque: 39 N–m (400 kgf–cm, 29 ft–lbf)

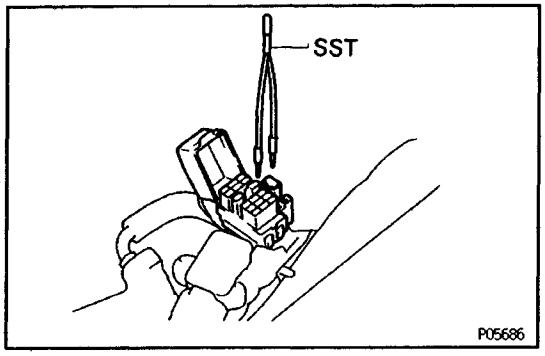

(e) Remove the SST from the data link connector 1.
SST 09843–18020

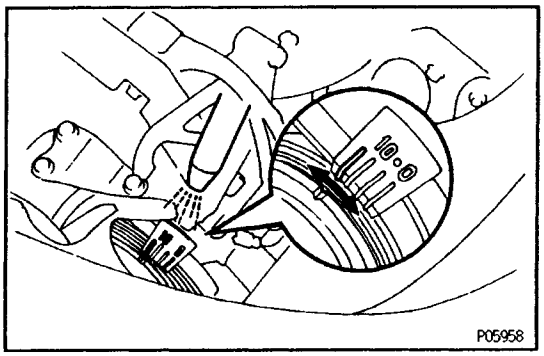

13. FURTHER CHECK IGNITION TIMING
Ignition timing:.
12 – 21° BTDC @ idle
(Transmission in neutral position)

HINT: The timing mark moves in a range between 12˚ and 21 ˚.

14. DISCONNECT TACHOMETER AND TIMING LIGHT FROM ENGINE
15. REINSTALL RH ENGINE HOOD SIDE PANEL
16. REINSTALL ENGINE UNDER COVERS

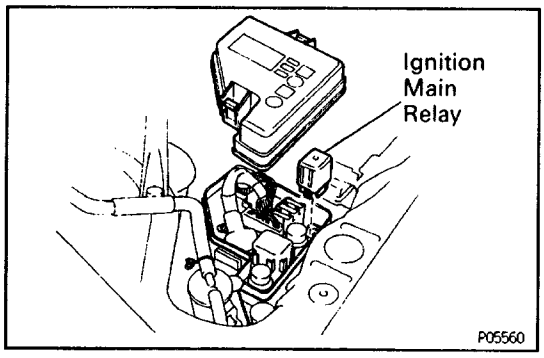

IGNITION MAIN RELAY

IG03Q–01

IGNITION MAIN RELAY ("IGN") INSPECTION

1. REMOVE IGNITION MAIN RELAY

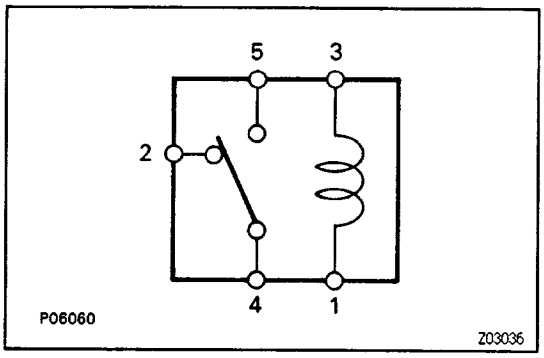

2. INSPECT IGNITION MAIN RELAY

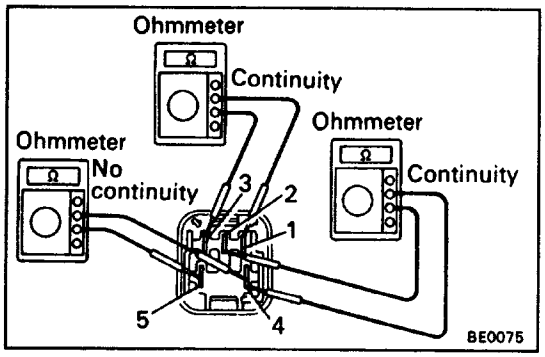

A. Inspect relay continuity

(a) Using an ohmmeter, check that there is continuity between terminals 1 and 3.

(b) Check that there is continuity between terminals 2 and 4.

(c) Check that there is no continuity between terminals 4 and 5.

If continuity is not as specified, replace the relay.

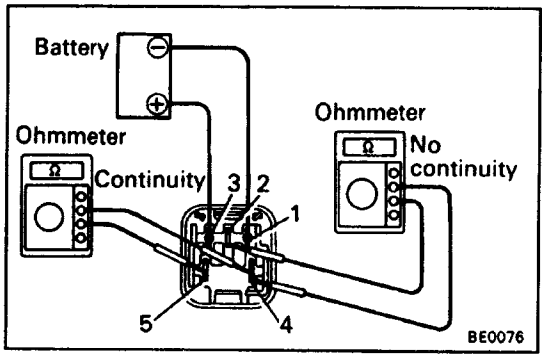

B. Inspect relay operation

(a) Apply battery voltage across terminals 1 and 3.

(b) Using an ohmmeter, check that there is continuity between the 2 and 4.

(c) Check that there is continuity between terminals 4 and 5.

If operation is not as specified, replace the relay.

3. REINSTALL IGNITION MAIN RELAY

ON–VEHICLE INSPECTION

IG01R–03

SPARK TEST

CHECK THAT SPARK OCCURS

(a) Disconnect the high–tension cord (from the ignition coil) from the distributor cap.

(b) Hold the end approx. 12.5 mm (0.50 in.) from the body ground.

(c) See if spark occurs while engine is being cranked.

HINT: To prevent gasoline from being injected from injectors during this test, crank the engine for no more than 1 – 2 seconds at time.

If the spark does not occur, perform the test as fol–lows:

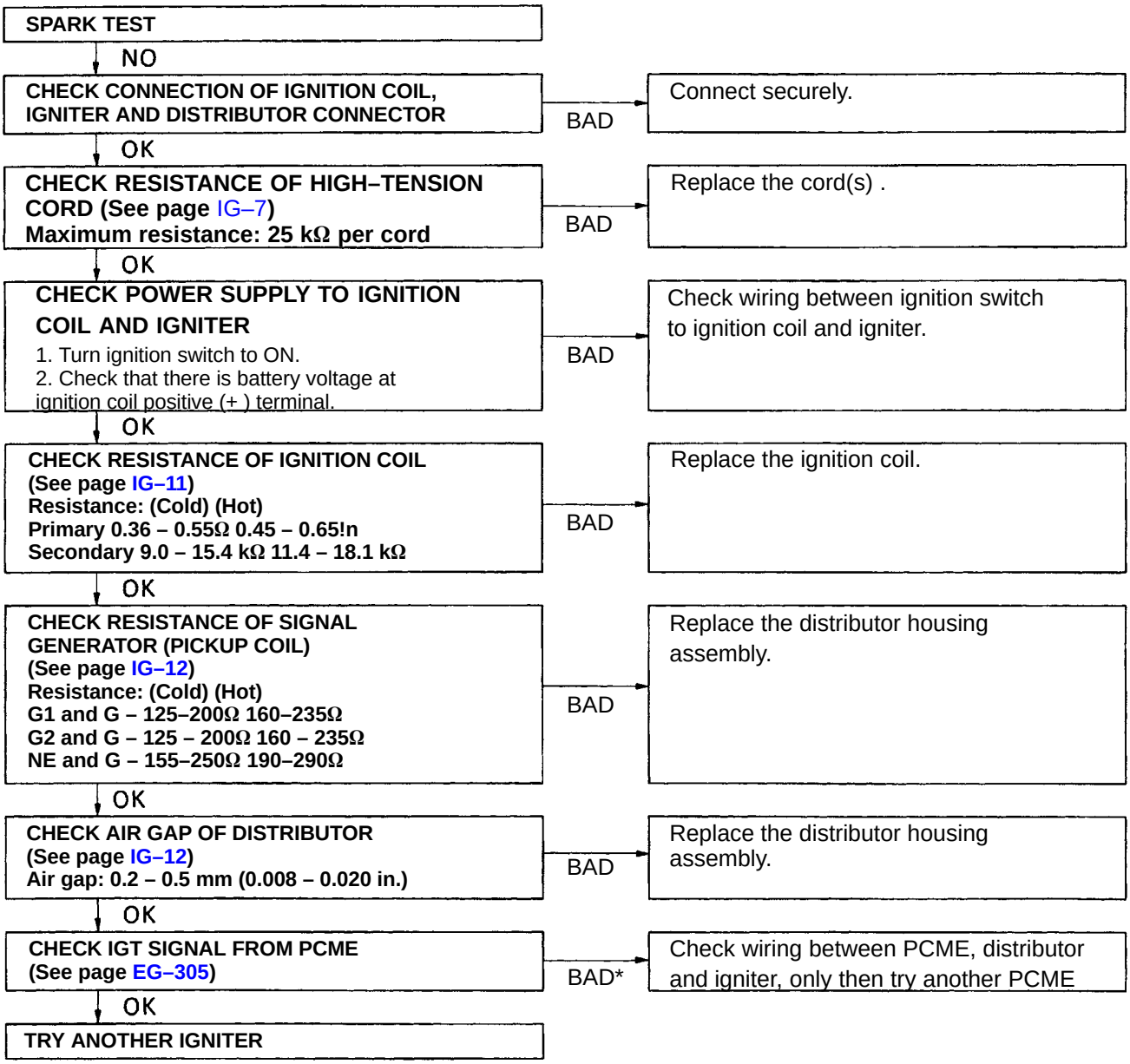

V00996

IG03J–01

HIGH–TENSION CORDS INSPECTION

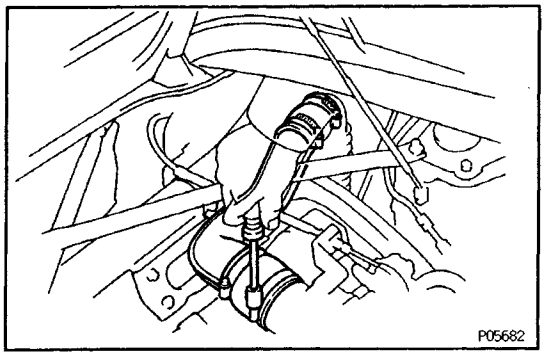

1. REMOVE N0.1 INTAKE AIR CONNECTOR

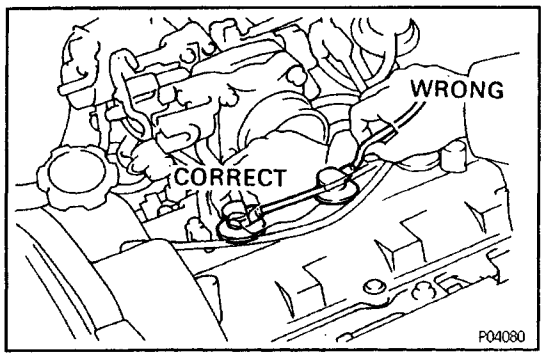

2. DISCONNECT HIGH–TENSION CORDS FROM SPARK PLUGS

Disconnect the high – tension cords at the rubber boot.

Do not pull on the high–tension cords.

NOTICE: Pulling on or bending the cords may damage the conductor inside.

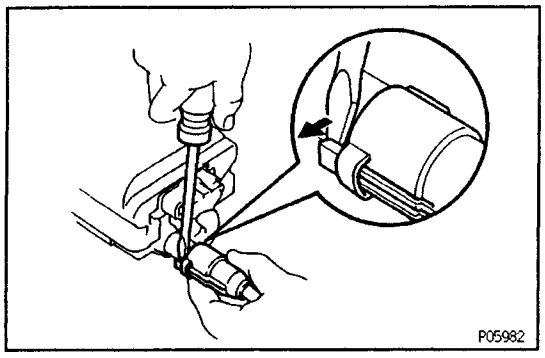

3. DISCONNECT HIGH–TENSION CORDS FROM IGNITION COIL

(a) Using a screwdriver, lift up the lock claw and dis–connect the holder from the ignition coil.

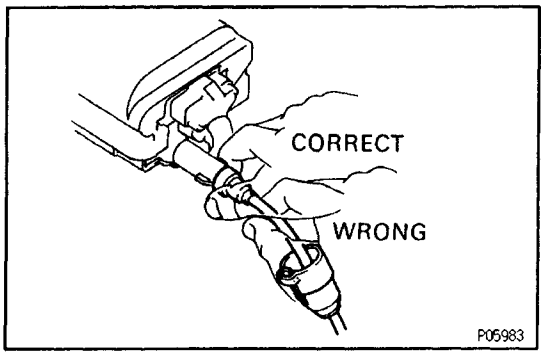

(b) Disconnect the high–tension cord at the grommet. Do not pull on the cord.

NOTICE: Pulling on or bending the cords may damage the conductor inside.

4. REMOVE DISTRIBUTOR CAP WITHOUT DISCONNECTING HIGH–TENSION CORDS

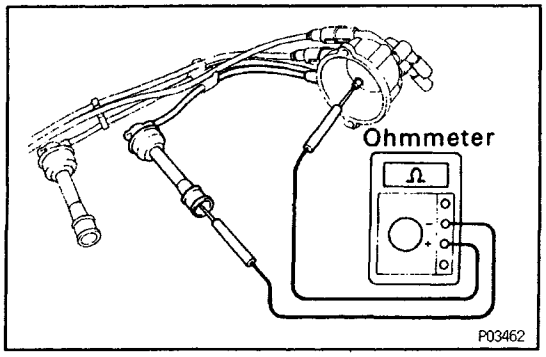

5. INSPECT HIGH–TENSION CORD RESISTANCE

Using an ohmmeter, measure the resistance without disconnecting the distributor cap.

Maximum resistance:
25 k Ω per cord

If the resistance is greater than maximum, check the terminals. If necessary, replace the high–tension cord and/or distributor cap.

6. REINSTALL DISTRIBUTOR CAP

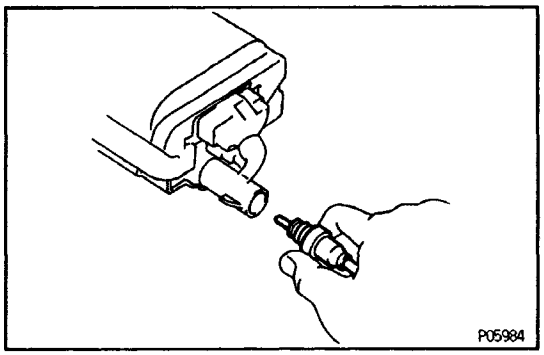

7. RECONNECT HIGH–TENSION CORDS TO IGNITION COIL

(a) Insert the grommet portion into the terminal hole hole of the ignition coil.

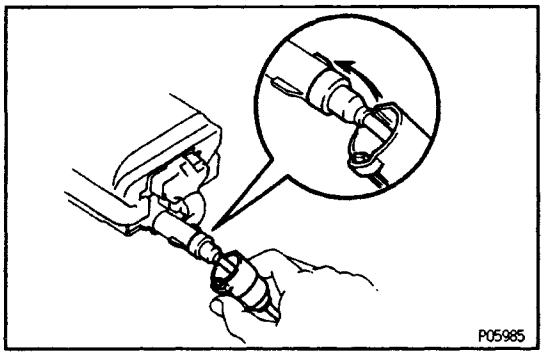

(b) Align the spline of the ignition coil with the spline of the holder, and slide on the holder.

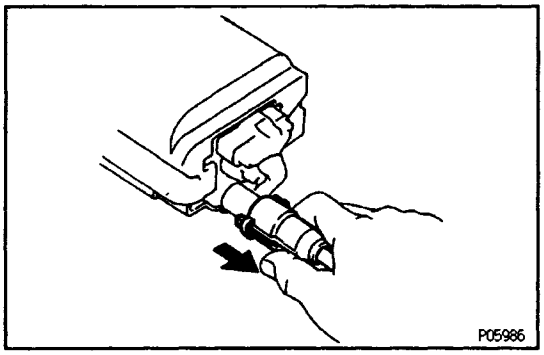

(c) Check that the lock claw of the holder is engaged by lightly pulling the holder.

8. RECONNECT HIGH–TENSION CORDS TO SPARK PLUGS

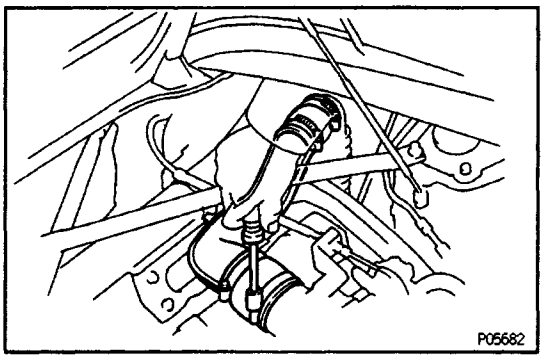

9. REINSTALL NO.1 INTAKE AIR CONNECTOR

IG09K–01

SPARK PLUGS INSPECTION

NOTICE:

- **Never use a wire brush for cleaning.**
- **Never attempt to adjust the electrode gap on used spark plug.**
- **Spark plug should be replaced every 100,000 km (60.000 miles).**

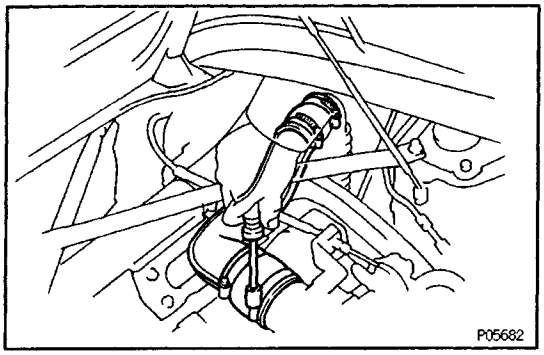

1. REMOVE NO.1 INTAKE AIR CONNECTOR

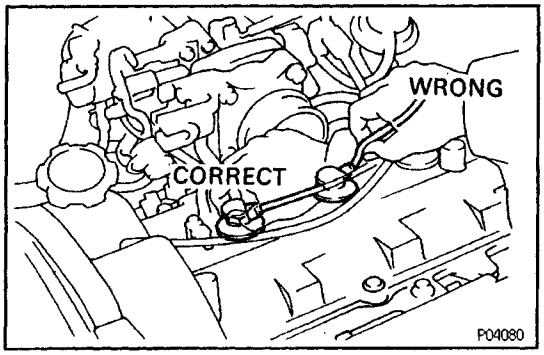

2. DISCONNECT HIGH–TENSION CORDS FROM SPARK PLUGS

Disconnect the high – tension cords at the rubber boot.

Do not pull on the cords.

NOTICE: Pulling on or bending the cords may damage the conductor inside.

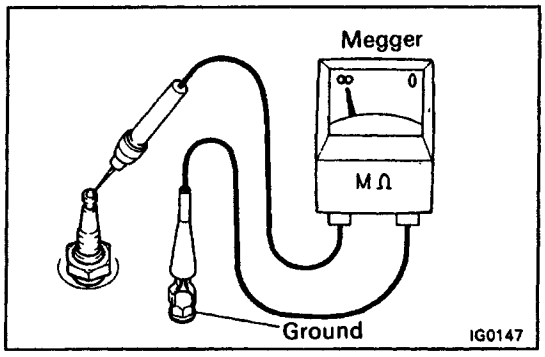

3. INSPECT ELECTRODE

Using a megger (insulation resistance meter), measure the insulation resistance.

Standard correct insulation resistance:

10 MΩ or more

If the resistance is less than specified, proceed to step 4.

HINT: If a megger is not available, the following simple method of inspection provides fairly accurate results.

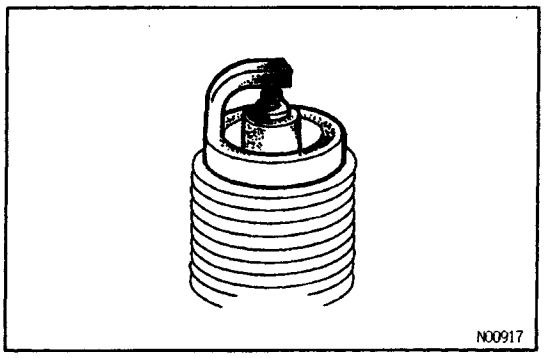

(Simple Method)

(a) Quickly race the engine to 4,000 rpm five times.

(b) Remove the spark plug. (See step 4)

(c) Visually check the spark plug.

If the electrode is dry ... Okey

If the electrode is wet ... Proceed to step 5

(d) Reinstall the spark plug. (See step 8)

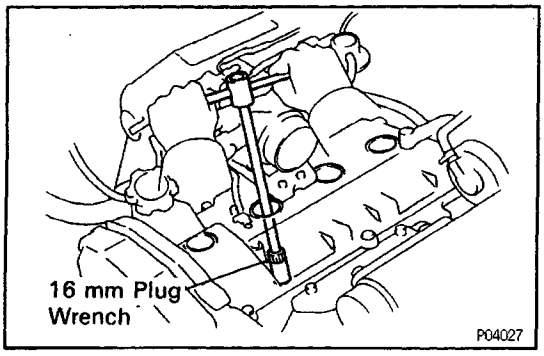

4. REMOVE SPARK PLUGS

Using a 16 mm plug wrench, remove the spark plug.

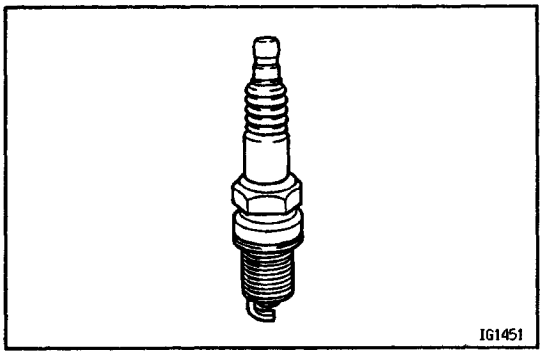

5. VISUALLY INSPECT SPARK PLUGS

Check the spark plug for thread damage and insulator damage.

If abnormal, replace the spark plug.

Recommended spark plug:

PK20R8 for ND

BKR6EP8 for NGK

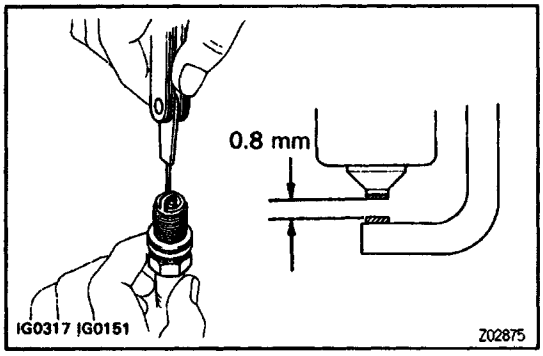

6. INSPECT ELECTRODE GAP

Maximum electrode gap:

1.0 mm (0.039 in.)

If the gap is greater than maximum, replace the spark plug.

Correct electrode gap of new spark plug:

0.8 mm (0.031 in.)

NOTICE: If adjusting the gap of a new spark plug, bend only the base of the ground electrode. Do not touch the tip. Never attempt to adjust the gap on the used plug.

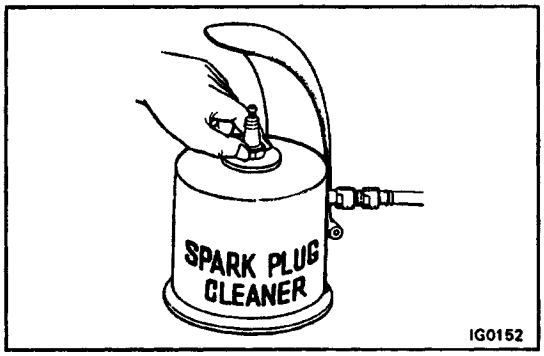

7. CLEAN SPARK PLUGS

If the electrode has traces of wet carbon, allow it to dry and then clean with a spark plug cleaner.

Air pressure:

Below 588 kPa (6 kgf/cm^2, 85 psi)

Duration:

20 seconds or less

HINT: If there are traces of oil, remove it with gasoline before using the spark plug cleaner.

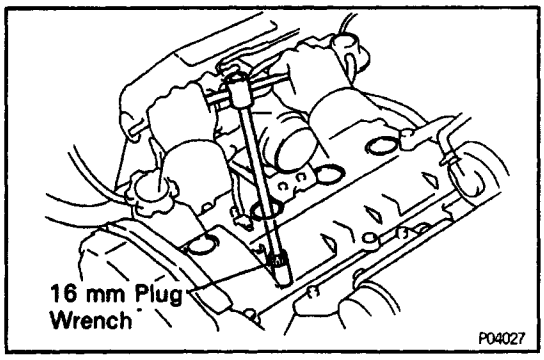

8. REINSTALL SPARK PLUGS

Using a 16 mm plug wrench, install the spark plug.

Torque: 18 N–m (180 kgf–cm, 13 ft–lbf)

9. RECONNECT HIGH–TENSION CORDS TO SPARK PLUGS

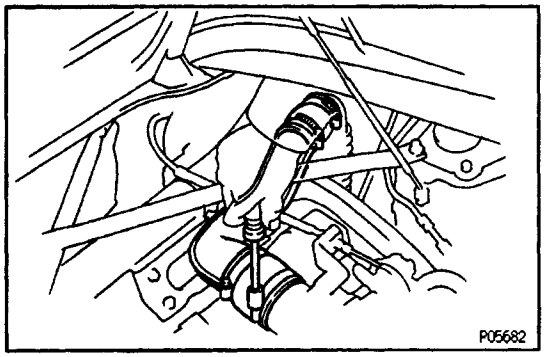

10. REINSTALL N0.1 INTAKE AIR CONNECTOR

IG01H–02

IGNITION COIL INSPECTION

NOTICE: ”Cold’ and ”Hot” in the following sentences express the temperature of the coils themselves. ”Cold” is from –10˚C (14˚F) to 50˚C (104˚F) and ”Hot’ is from 50˚C (104˚F) to 100˚C (212˚F).

1. DISCONNECT IGNITION COIL CONNECTOR

2. DISCONNECT HIGH–TENSION CORD FROM IGNITION COIL

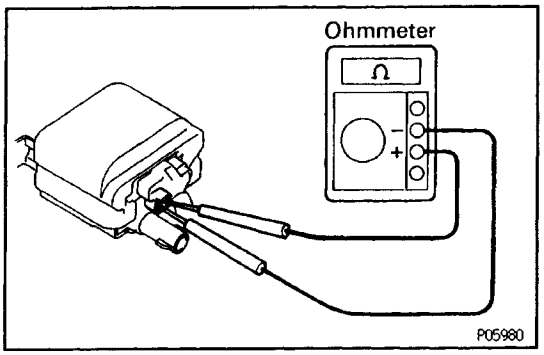

3. INSPECT PRIMARY COIL RESISTANCE

Using an ohmmeter, measure the resistance between the positive (+) and negative (–) terminals.

Primary coil resistance (Cold):

0.36–0.55Ω

Primary coil resistance (Hot):

0.45 – 0.65Ω

If the resistance is not as specified, replace the ignition coil.

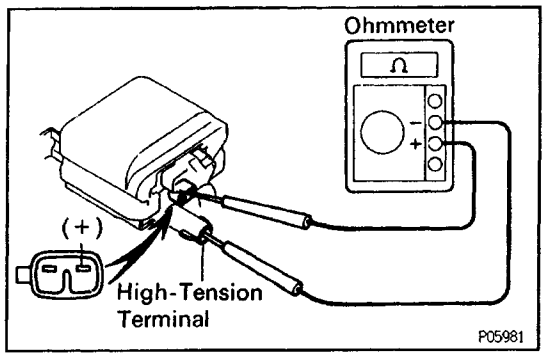

4. INSPECT SECONDARY COIL RESISTANCE

Using an ohmmeter, measure the resistance between the positive (+) and high–tension terminals.

Secondary coil resistance (Cold):

9.0 – 15.4 kΩ

Secondary coil resistance (Hot):

11.4 – 18.1 kΩ

If the resistance is not as specified, replace the ignition coil.

5. RECONNECT HIGH–TENSION CORD TO IGNITION COIL

6. RECONNECT IGNITION COIL CONNECTOR

DISTRIBUTOR INSPECTION

IG03L–01

NOTICE: ”Cold” and ”Hot’ in the following sentences express the temperature of the coils themselves. ”Cold” is from –10˚C (14˚F) to 50˚C (104˚F) and ”Hot” is from 50˚C (104˚ F) to 100˚C (212˚ F).

1. DISCONNECT DISTRIBUTOR CONNECTOR

2. REMOVE DISTRIBUTOR CAP

3. REMOVE ROTOR

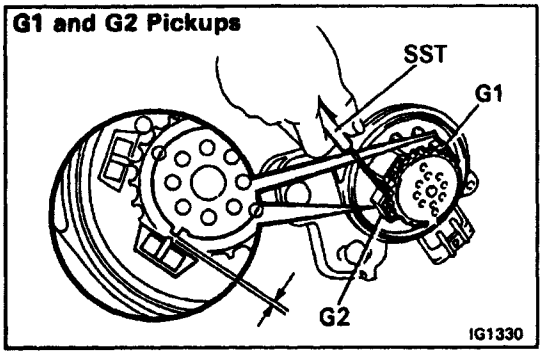

4. INSPECT AIR GAP

Using SST (G1 and G2 pickups) and a feeler gauge (NE pickup), measure the air gap between the signal rotor and pickup coil projection.

SST 09240–00020 for G1 and G2 pickups

Air gap:

0.2 – 0.5 mm (0.008 – 0.020 in.)

If the air gap is not as specified, replace the distributor housing assembly.

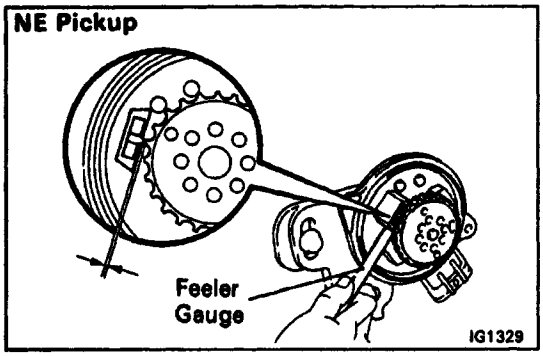

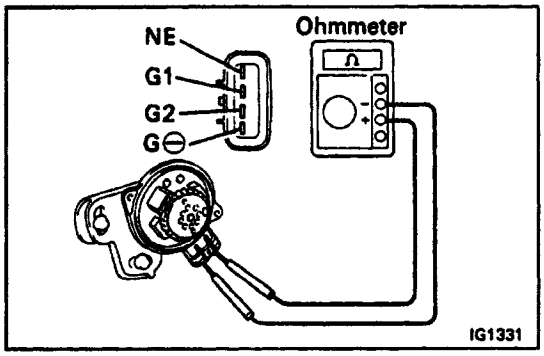

5. INSPECT SIGNAL GENERATOR (PICKUP COIL) RESISTANCE

Using an ohmmeter, measure the resistance between terminals.

Pickup coil resistance (Cold):

G1 and G (–)

125–200Ω

G2 and G (–)

125–200Ω

NE and G (–)

155–250Ω

Pickup coil resistance (Hot):

G1 end G (–)

160–235Ω

G2 and G (–)

160–235Ω

NE and G (–)

190–290Ω

If the resistance is not as specified, replace the dis–tributor housing assembly.

6. REINSTALL ROTOR

7. REINSTALL DISTRIBUTOR CAP

8. RECONNECT DISTRIBUTOR CONNECTOR

IG01S–03

IGNITER INSPECTION

(See procedure Spark Test)

SYSTEM CIRCUIT

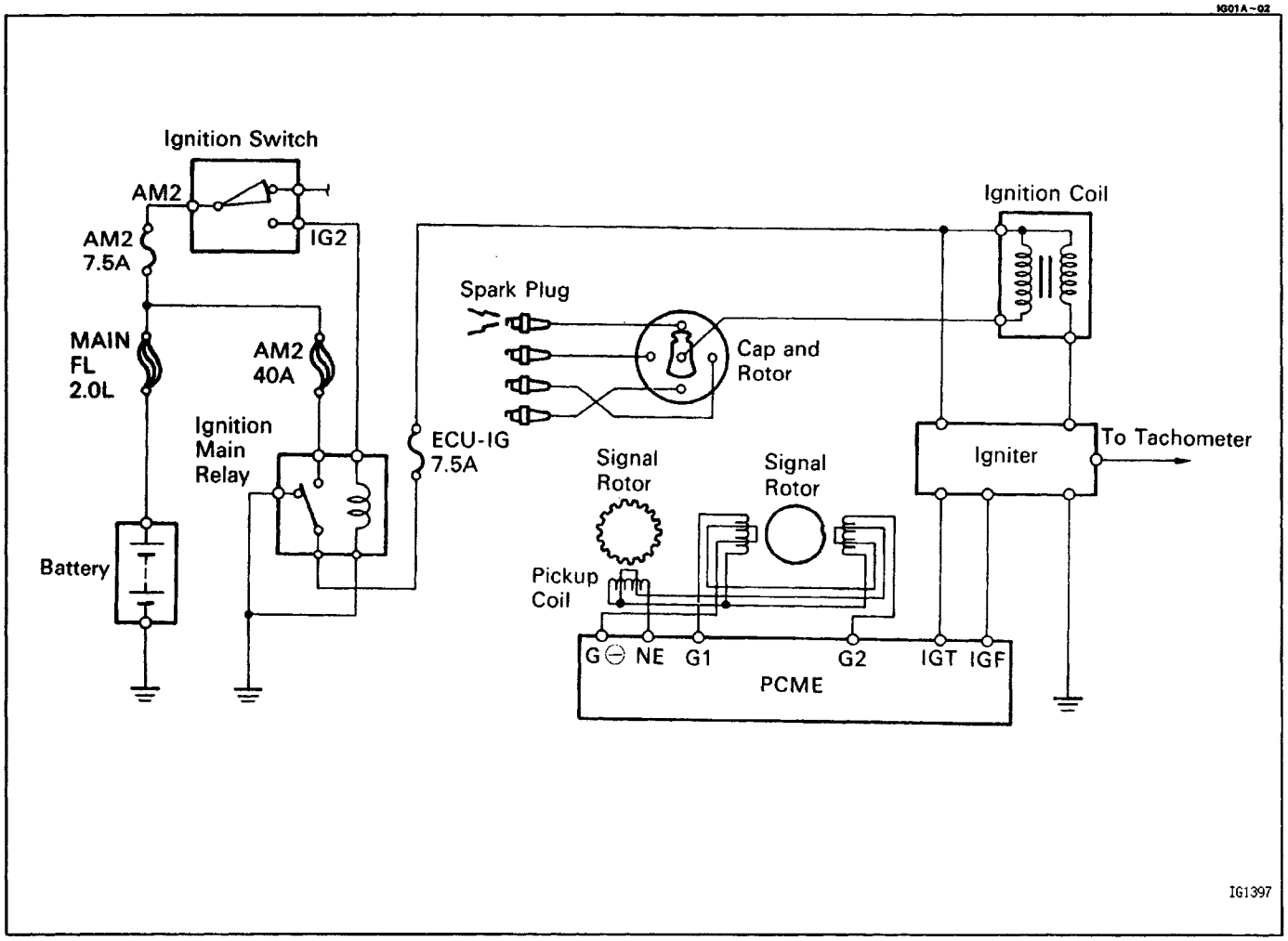

OPERATION

To maintain the most appropriate ignition timing, the PCME sends a control signal so that the igniter sends current to the ignition coil and the spark plugs produce a spark.

PRECAUTION

1. Do not leave the ignition switch on for more than 10 minutes if the engine does not start.

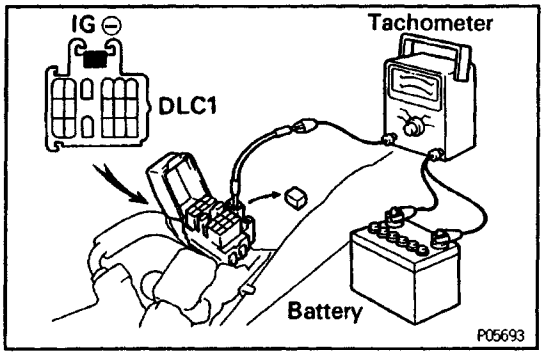

2. With a tachometer connected to the system, connect the test probe of the tachometer to terminal IG (–) of the data link connector 1.

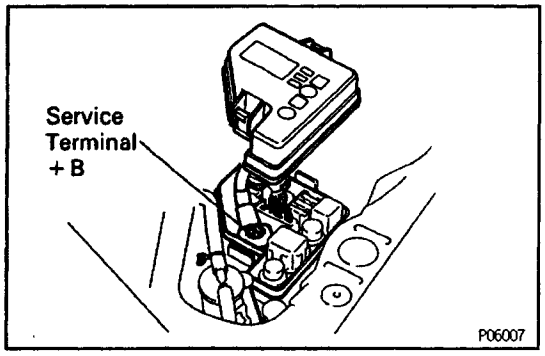

3. With a tachometer connected to the system, connect the power source probe of the tachometer to service terminal +B of the engine compartment relay box.

4. As some tachometers are not compatible with this ignition system, we recommend that you confirm the compatibility of your before use.
5. Never allow the tachometer terminals to touch ground as it could result in damage to the igniter and/or ignition coil.
6. Do not disconnect the battery while the engine is running.
7. Check that the igniter is properly grounded to the body.

PREPARATION

SST (SPECIAL SERVICE TOOLS)

IG01C–01

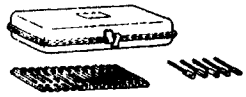	09240–00020 Wire Gauge Set	Air gap
	09843–18020 Diagnosis Check Wire	

RECOMMENDED TOOLS

IG01D–01

	09082–00015 TOYOTA Electrical Tester	
	09200–00010 Engine Adjust Kit	

EQUIPMENT

IG01E–01

Spark plug cleaner	
Tachometer	
Timing light	Ignition timing

SERVICE SPECIFICATIONS

IG01P–02

SERVICE DATA

Ignition timing	w/ Terminals TE1 and E1 connected		10° BTDC @ idle
Firing order	–		1 – 3 – 4 – 2
High–tension cord	Resistance (Maximum)		25 kΩ per cord
Spark plug	Recommended spark plug	ND	PK20R8
	Recommended spark plug	NGK	BKR6EP8
	Correct electrode gap		0.8 mm (0.031 in.)
	Maximum electrode gap of used plug		1.0 mm (0.039 in.)
Ignition coil	Primary coil resistsnce (Cold)		0.36 – 0.55 Ω
	Primary coil resistance (Hot)		0.45 – 0.65 Ω
	Secondary coil resistsnce (Cold)		9.0 – 15.4 kΩ
	Secondary coil resistance (Hot)		11.4 – 18.1 kΩ
Distributor	Air gap		0.2 – 0.5 mm (0.008 – 0.020 in.)
	Signal generator (pickup coil) resistance (Cold)		
	G1 – G(–)		125 – 200 Ω
	G2 – G(–)		125 – 200 Ω
	NE– G(–)		155 – 250 Ω
	Signal generator (pickup coil) resistance (Hot)		
	G1 – G(–)		160 – 235 Ω
	G2– G(–)		160 – 235 Ω
	NE – G(–)		195 – 290 Ω

TORQUE SPECIFICATIONS

IG01Q–02

Part tightened	N·m	kgf·cm	ft·lbf
Spark plug x Cylinder head	18	180	13
Distributor x Cylinder head	39	400	29

SYSTEM CIRCUIT

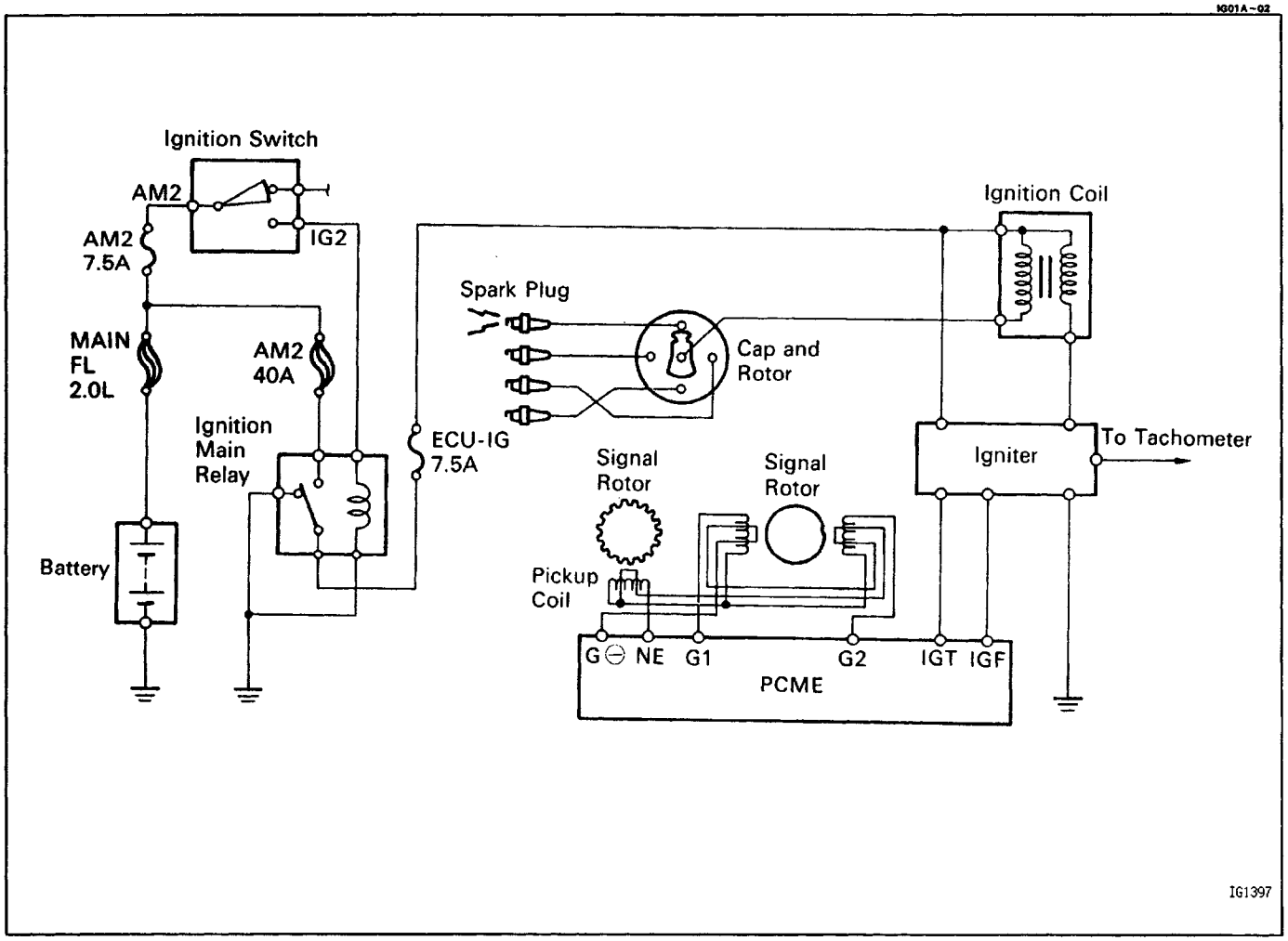

OPERATION

To maintain the most appropriate ignition timing, the PCME sends a control signal so that the igniter sends current to the ignition coil and the spark plugs produce a spark.

(5S–FE)

DESCRIPTION

The PCME (& T) is programmed with data for optimum ignition timing under any and all operating conditions.

Using data provided by sensors which monitor various engine functions (rpm, intake air volume, eng, temperature, etc.), the microcomputer (PCME (& T)) triggers the spark at precisely the right instant.

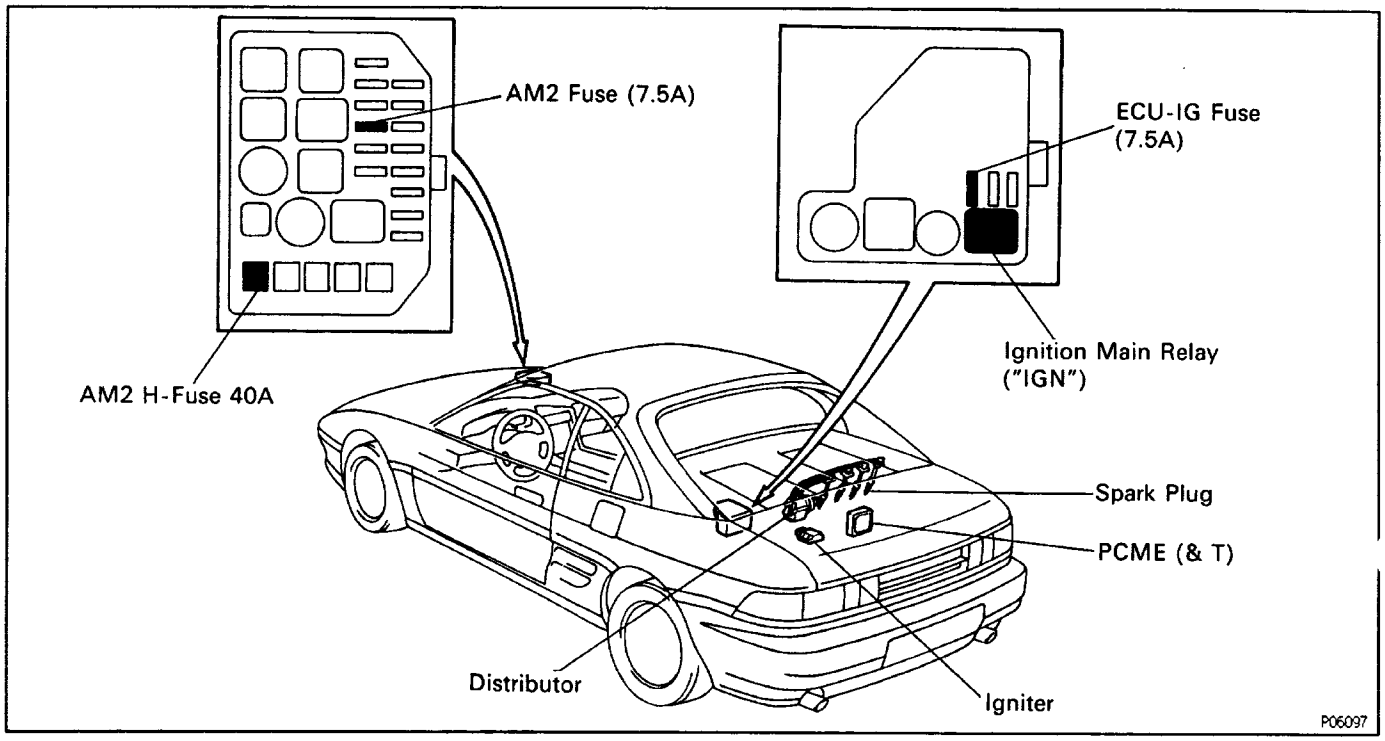

The PCME (& T) monitors the engine condition by signals from each sensor, calculates the ignition timing andsends an ignition signal to the igniter. High voltage from the ignition is distributed to each spark plug in the appropriate order to generate a spark between the electrodes, which ignites the air–fuel mixture.

IGNITER

The igniter temporarily interrupts the primary current with the ignition signal (IGT signal) from the PCM (& T) and generates sparks at the spark plug. Also, as a fail–safe measure, when ignition occurs an ignition confirmation signal (IGF signal) is sent to the PCME (& T).

IGNITION COIL

The ignition coil uses a closed core coil with the primary coil wrapped around the core and the secondary toil wrapped around the primary coil. This allows the generation of a high voltage sufficient to cause a spark to jump across the spark plug gap.

DISTRIBUTOR

This correctly distributes high voltage to the spark plug of each cylinder in the specified ignition order.

PICKUP COILS

The NE coil detects the crank angle, and the G coil detects the cam angle.

DISTRIBUTOR

IG011–02

COMPONENTS FOR REMOVAL AND INSTALLATION

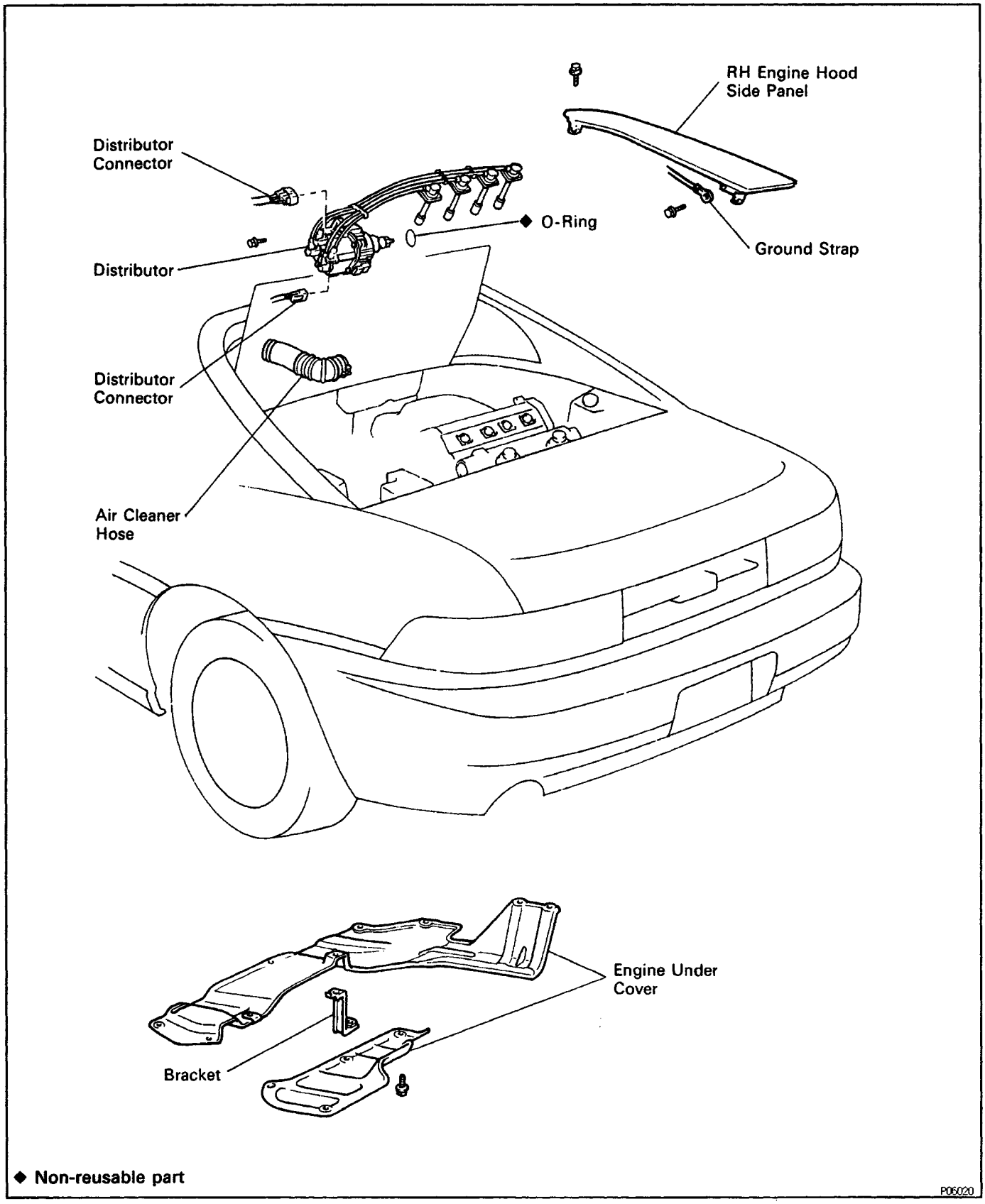

◆ Non-reusable part

P06020

IG03V–01

DISTRIBUTOR REMOVAL

(See Components for Removal and Installation)

1. DISCONNECT CABLE FROM NEGATIVE TERMINAL OF BATTERY

CAUTION: Turn the ignition switch to "LOCK". Disconnect the negative terminal from the battery. Wait at least 20 seconds before proceeding with work.

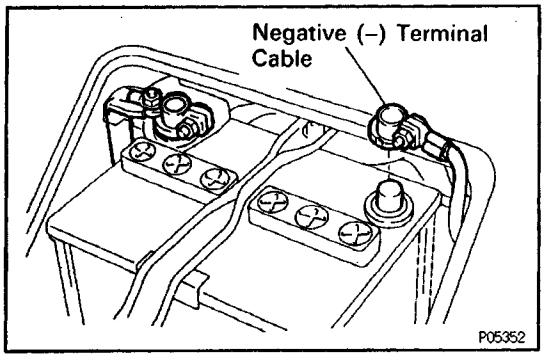

2. REMOVE AIR CLEANER HOSE

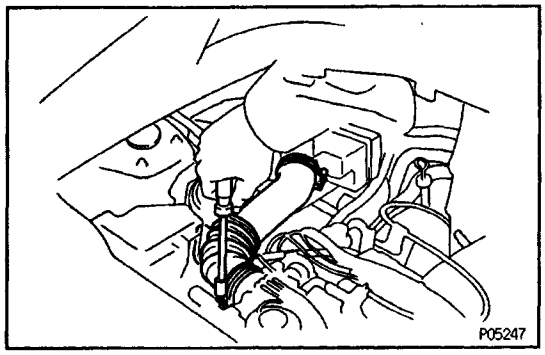

3. DISCONNECT DISTRIBUTOR CONNECTORS

4. DISCONNECT HIGH–TENSION CORDS FROM SPARK PLUGS

(a) Disconnect the four high–tension cords from the spark plugs.

(b) Disconnect the high–tension cords from the clamp on the cylinder head cover.

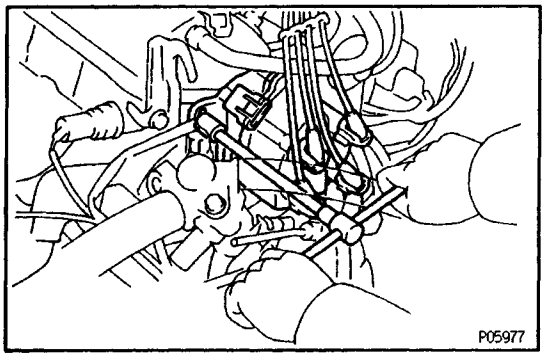

5. REMOVE DISTRIBUTOR WITH HIGH–TENSION CORDS

(a) Remove the two mounting bolts, and pull out the distributor.

(b) Remove the O–ring from the distributor housing.

COMPONENTS FOR DISASSEMBLY AND ASSEMBLY

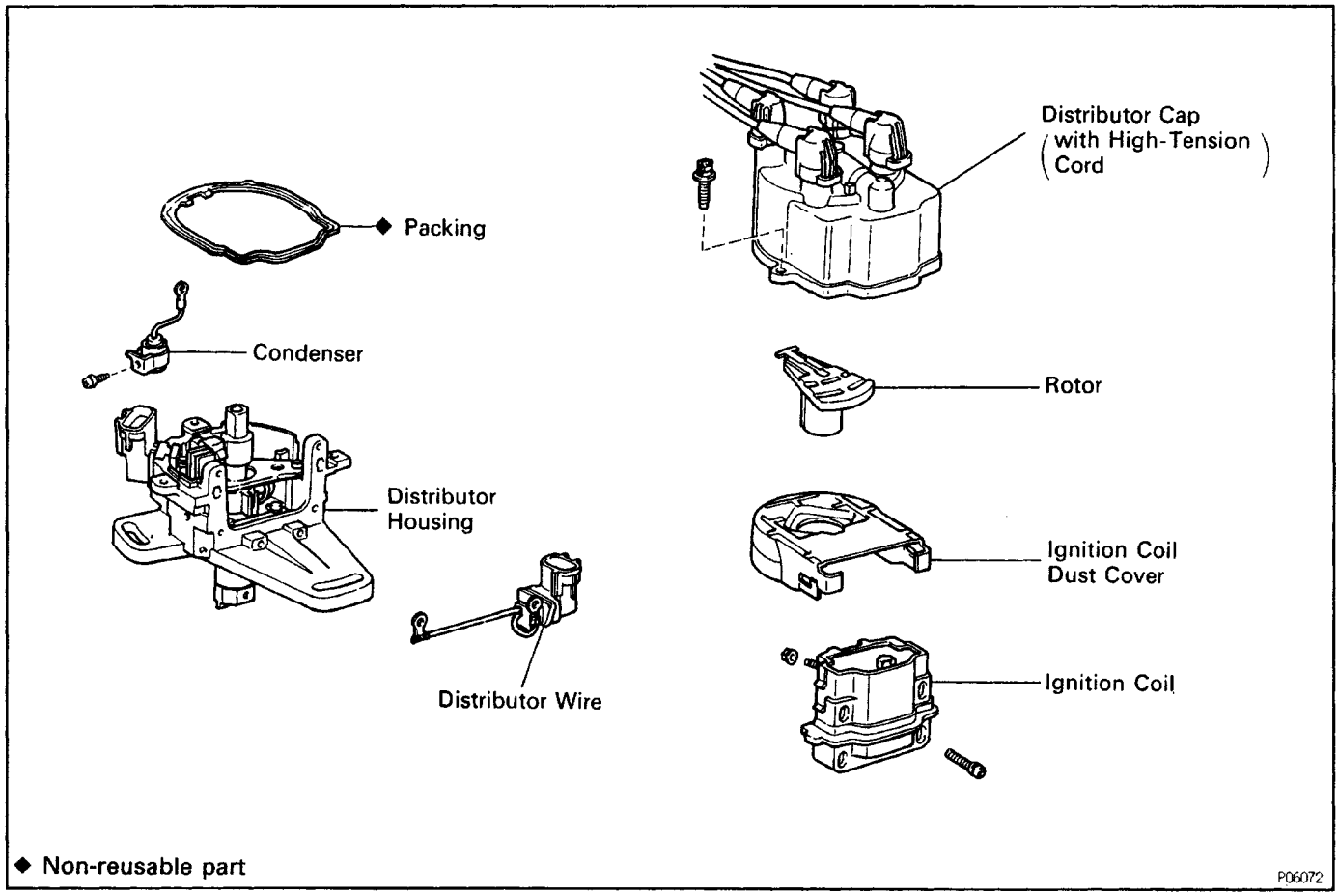

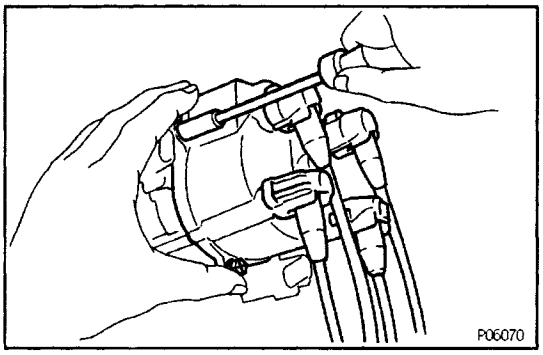

IG03W–01

DISTRIBUTOR DISASSEMBLY

(See Components for Disassembly and Assembly)

1. REMOVE DISTRIBUTOR CAP

Remove the three bolts and distributor cap.

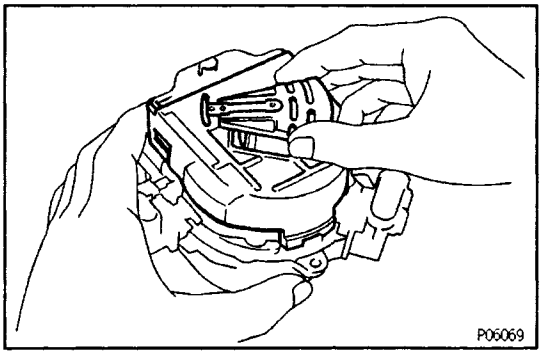

2. REMOVE ROTOR

3. REMOVE IGNITION COIL DUST COVER

(a) Remove the dust cover.

(b) Remove the packing.

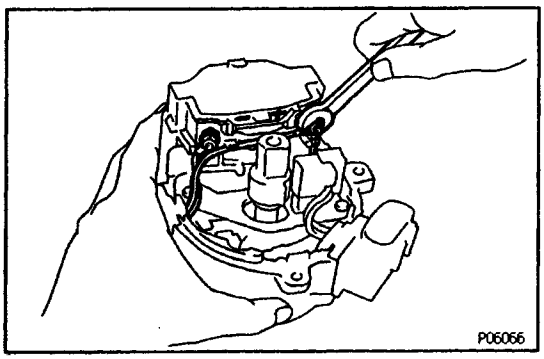

4. REMOVE DISTRIBUTOR WIRE

(a) Remove the two nuts, and disconnect the three wires from the ignition coil terminals.

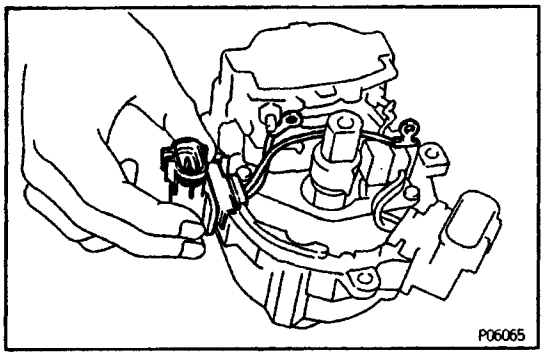

(b) Remove the distributor wire from the distributor housing.

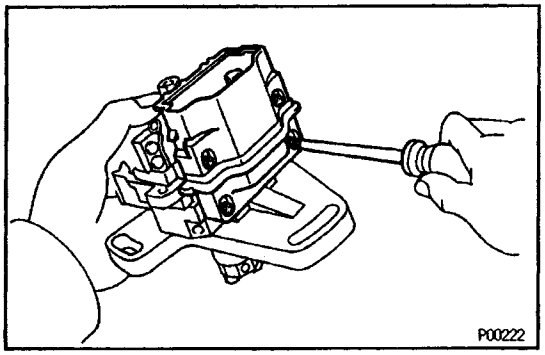

5. REMOVE IGNITION COIL

Remove the four screws and ignition coil.

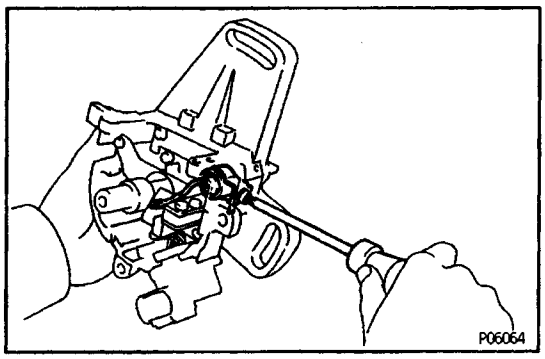

6. REMOVE CONDENSER

Remove the screw and condenser.

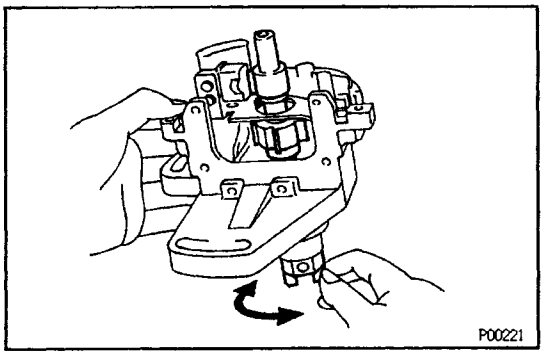

IG013–03

DISTRIBUTOR INSPECTION

INSPECT SHAFT

Turn the shaft and check that it is not rough or worn. It it feels rough or worn, replace the distributor hou–sing assembly.

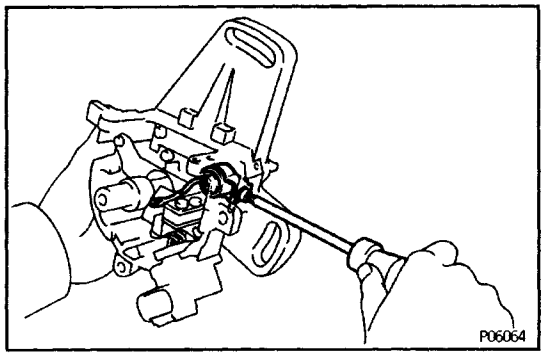

IG03X–01

DISTRIBUTOR ASSEMBLY

(See Components for Disassembly and Assembly)

1. INSTALL CONDENSER

Install the condenser with the screw.

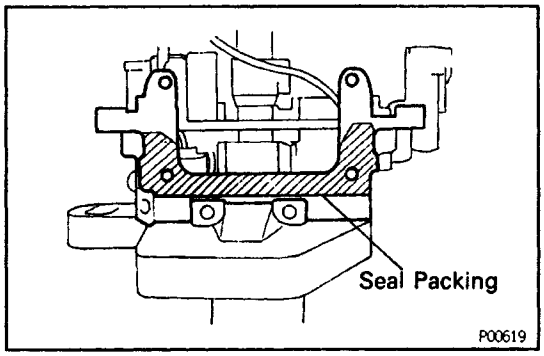

2. INSTALL IGNITION COIL

(a) Remove any old packing (FIPG) material.

(b) Apply seal packing to the ignition coil installing sur–face of the housing as shown in the illustration.

Seal packing:

Part No. 08826–00080 or equivalent

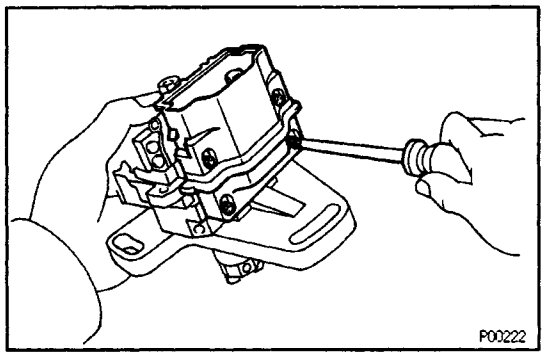

(c) Install the ignition coil with the four screws.

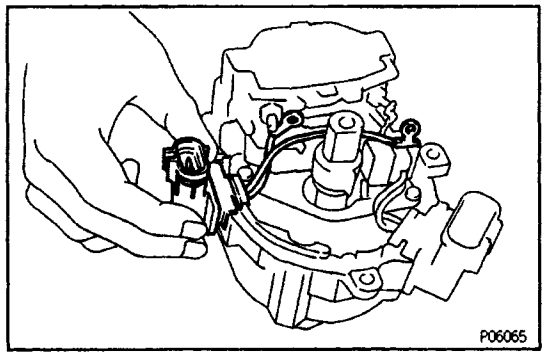

3. INSTALL DISTRIBUTOR WIRE

(a) Install the grommet of the wire to the distributor housing.

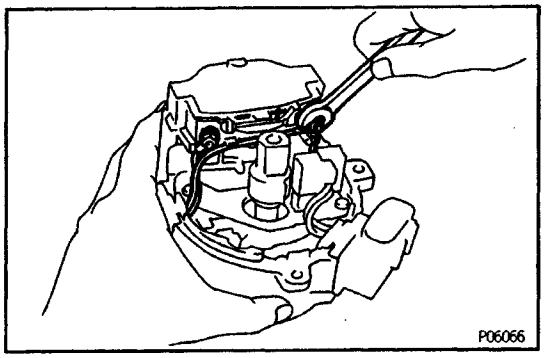

(b) Connect the three wires to the ignition coil terminals with the two nuts.

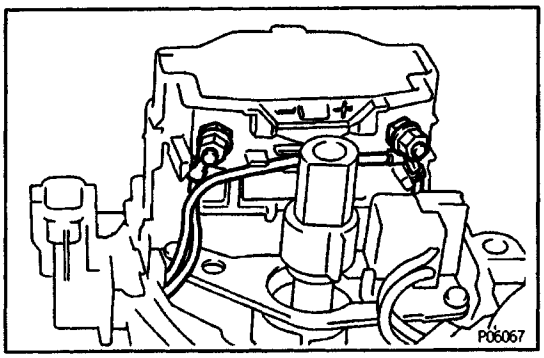

NOTICE:

- **When connecting the wires to the ignition coil, insert both properly into their grooves found on the side of the ignition coil.**
- **Be sure the wires do not contact with signal rotor or distributor housing.**

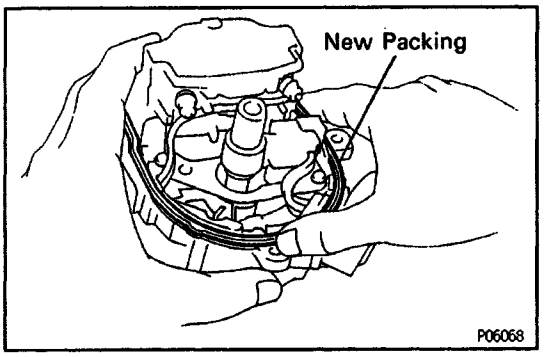

4. INSTALL IGNITION COIL DUST COVER

(a) Install a new packing to the distributor housing.

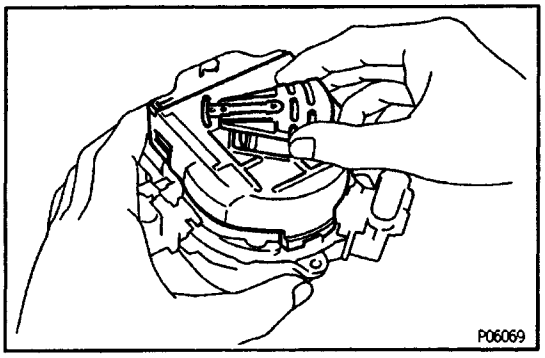

(b) Install the dust cover.

5. INSTALL ROTOR

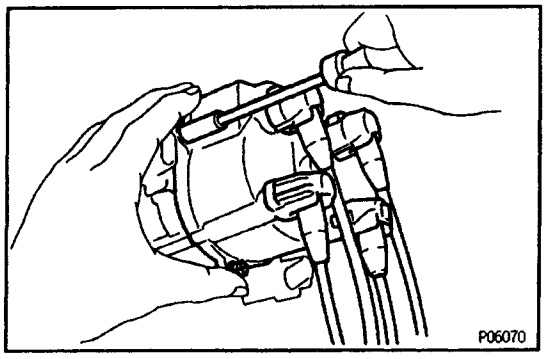

6. INSTALL DISTRIBUTOR CAP AND HIGH –TENSION CORDS

Install the distributor cap with the three bolts.

IG03Y–01

DISTRIBUTOR INSTALLATION

(See Components for Removal and Installation)

1. REMOVE ENGINE UNDER COVERS

2. REMOVE RH ENGINE HOOD SIDE PANEL

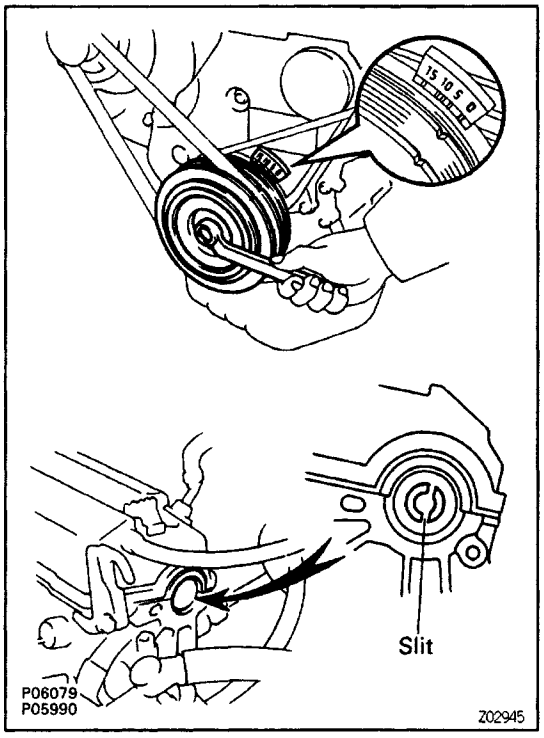

3. SET N0.1 CYLINDER TO TDC/COMPRESSION

Turn the crankshaft clockwise, and position the slit of the intake camshaft as shown in the illustration.

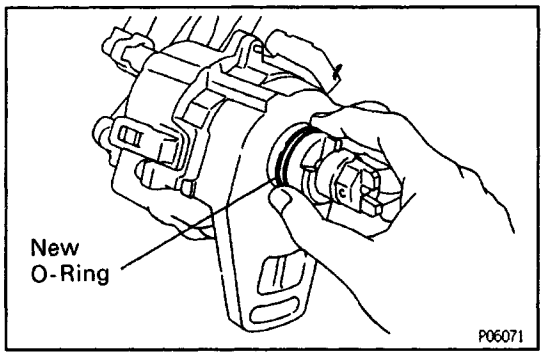

4. INSTALL DISTRIBUTOR

(a) Install a new 0–ring to the housing.

(b) Apply alight coat of engine oil on the 0–ring,

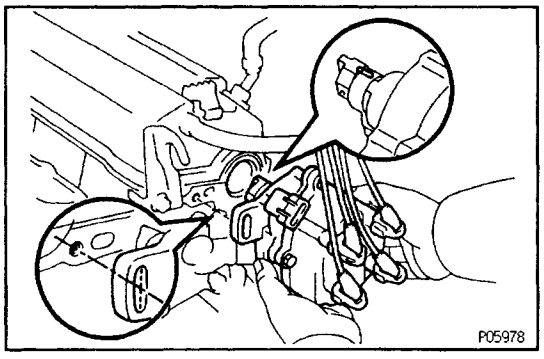

(c) Align the cutout portion of the coupling with the groove of the housing.

(d) Insert the distributor, aligning the center of the flange with that of the bolt hole on the cylinder head.

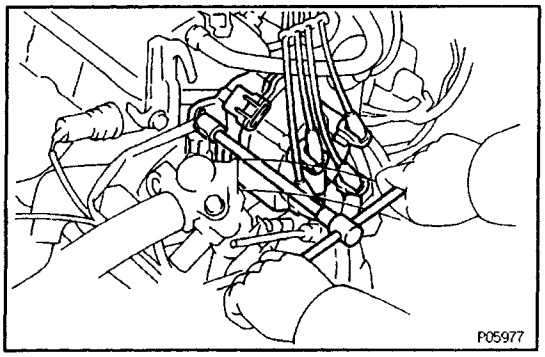

(e) Lightly tighten the two mounting bolts.

5. CONNECT HIGH–TENSION CORDS TO SPARK PLUGS

(a) Connect the four high–tension cords to the spark: plugs.

Firing order:

1 – 3 – 4 – 2

(b) Connect the high–tension cords to the clamp on the cylinder head cover.

6. CONNECT DISTRIBUTOR CONNECTORS

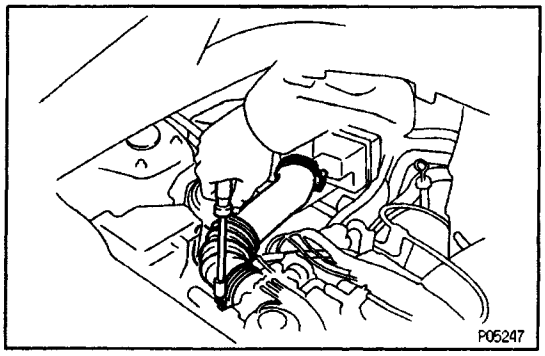

7. INSTALL AIR CLEANER HOSE

8. CONNECT CABLE TO NEGATIVE TERMINAL OF BATTERY

9. WARM UP ENGINE

Allow the engine to warm up to normal operating temperature.

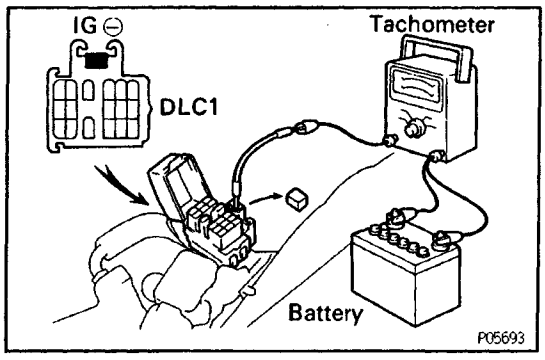

10. CONNECT TACHOMETER AND TIMING LIGHT TO ENGINE

Connect the test probe of a tachometer to terminal IG (–) of the check connector.

NOTICE:

- **Never allow the tachometer terminal to touch ground as it could result in damage to the igniter and/or ignition coil.**
- **As some tachometers are not compatible with this ignition system, we recommend that you confirm the compatibility of your unit before use.**

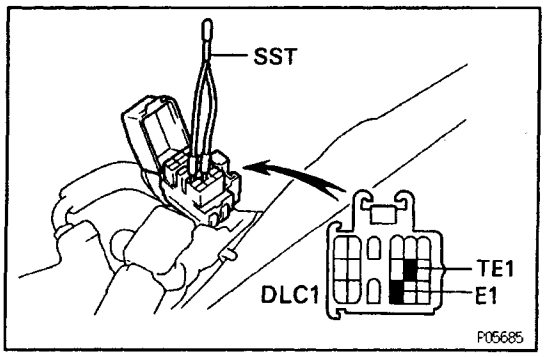

11. ADJUST IGNITION TIMING

(a) Using SST, connect terminals TE 1 and E 1 of the data link connector 1.

SST 09843–18020

HINT: After engine rpm is kept at 1,000 – 1,300 rpm for 5 seconds, check that it returns to idle speed.

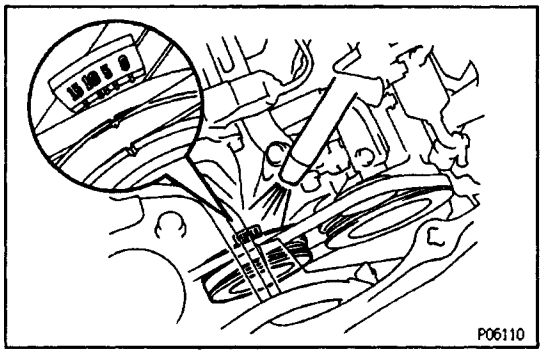

(b) Using a timing light, check the ignition timing.

Ignition timing:

10° BTDC @ idle

(Transmission in neutral position)

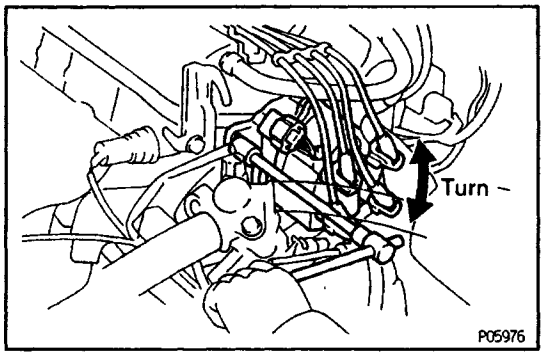

(c) Loosen the two mounting bolts, and adjust by turning the distributor.

(d) Tighten the mounting bolts, and recheck the ignition timing.

Torque: 19 N–m (195 kgf–cm, 14 ft–lbf)

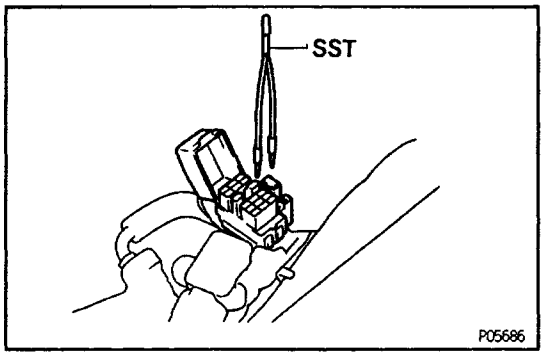

(e) Remove the SST from the data link connector 1.
SST 09843–18020

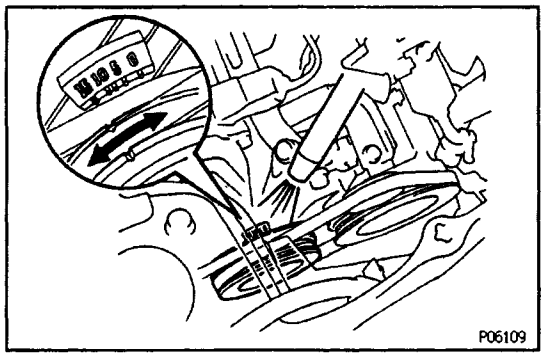

12. FURTHER CHECK IGNITION TIMING

Ignition timing:

13 – 22° BTDC @ idle

(Transmission in neutral position)

HINT: The timing mark moves in a range between 13° and 22°.

13. DISCONNECT TACHOMETER AND TIMING LIGHT FROM ENGINE

14. REINSTALL RH ENGINE HOOD SIDE PANEL

15. REINSTALL ENGINE UNDER COVERS

IGNITION MAIN RELAY

(See 3S–GTE Engine)

ST014–08

SERVICE SPECIFICATIONS

IG016–02

SERVICE DATA

Ignition timing	w/ Terminals TE1 and E1 connected		10° BTDC @ idle
Firing order	–		1 – 3 –4– 2
High–tension cord	Resistance (Maximum)		25 kΩ per cord
Spark plug	Recommended spark plug	ND	PK20R11
	Recommended spark plug	NGK	BKR6EP–11
	Correct electrode gap		1.1 mm (0.043 in.)
	Maximum electrode gap of used plug		1.3 mm (0.051 in.)
Ignition coil	Primary coil resistsnce (Cold)		0.36 – 0.55 Ω
	Primary coil resistance (Hot)		0.45–0.65 Ω
	Secondary coil resistsnce (Cold)		9.0 – 15.4 k Ω
	Secondary coil resistance (Hot)		11.4 – 18.1 k Ω
Distributor	Air gap		0.2 – 0.4 mm (0.008 – 0.016 in.)
	Signal generator (pickup coil) resistance (Cold)		
	G(+) – G(–)		185 – 275 Ω
	NE(+) – NE(–)		370 – 550 Ω
	Signal generator (pickup coil) resistance (Hot)		
	G(+) – G(–)		240 – 325 Ω
	NE(+) – NE(–)		475 – 650 Ω

IG017–01

TORQUE SPECIFICATIONS

Part tightened	N–m	kgf–cm	ft–lbf
Spark plug x Cylinder head	**18**	180	**13**
Distributor x Cylinder head	**19**	195	**14**

ON–VEHICLE INSPECTION

IG038–01

SPARK TEST

CHECK THAT SPARK OCCURS

(a) Disconnect the high–tension cords from the spark plugs.
(b) Remove the spark plugs.
(c) Install the spark plugs to the each high–tension cord.
(d) Ground the spark plug.
(e) Check if spark occurs while engine is being cranked.

HINT: To prevent gasoline from being injected from injectors during this test, crank the engine for no more than 1 – 2 seconds at a time.If the spark does not occur, perform the test as follows:

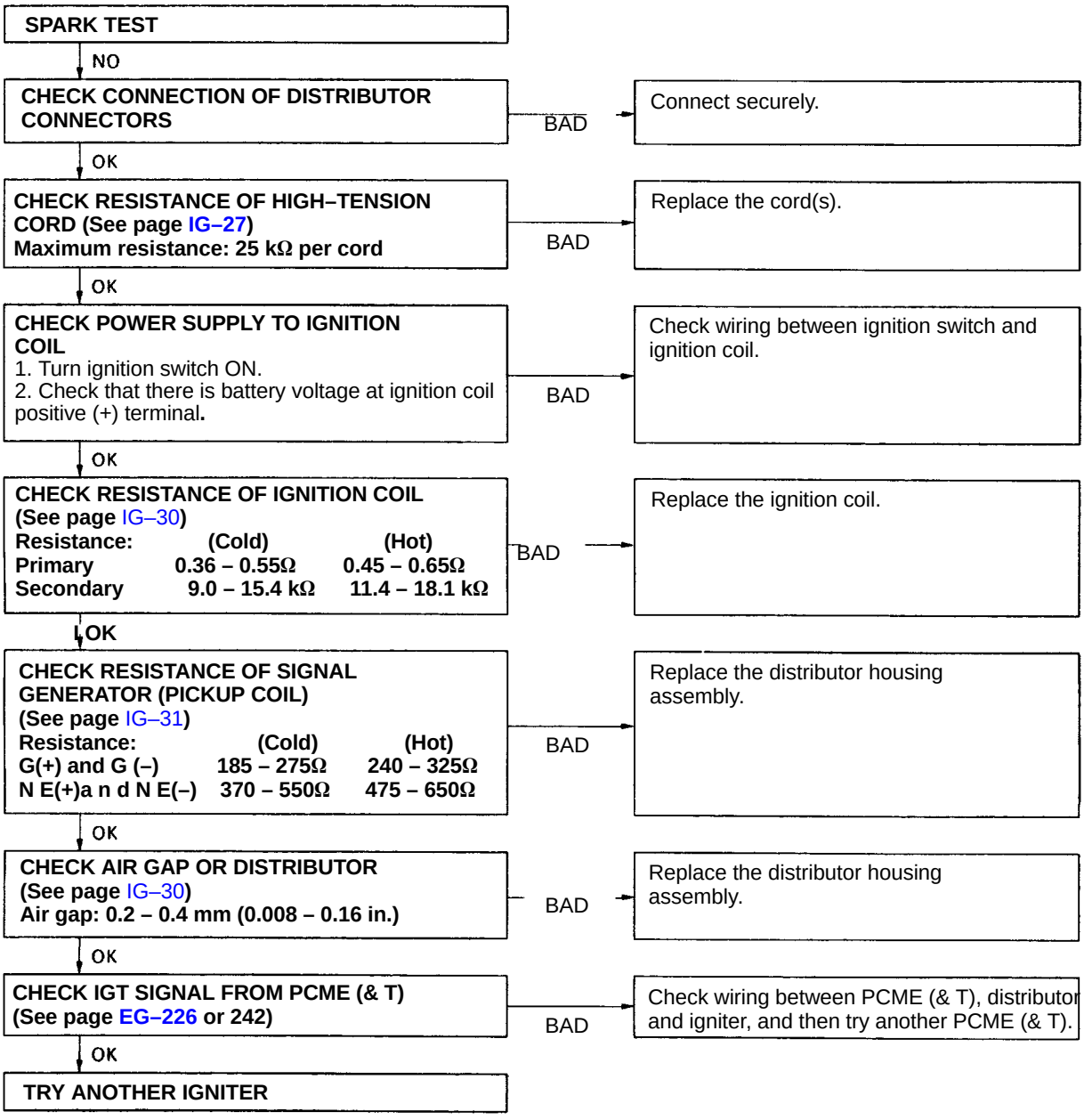

V01053

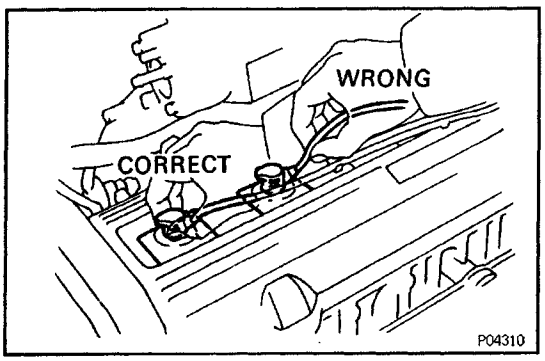

HIGH–TENSION CORDS INSPECTION

IG03T–01

1. DISCONNECT HIGH–TENSION CORDS FROM SPARK PLUGS

Disconnect the high – tension cords at the rubber boot.

Do not pull on the cords.

NOTICE: Pulling on or bending the cords may damage the conductor inside.

2. REMOVE DISTRIBUTOR CAP WITHOUT DISCONNECTING HIGH–TENSION CORDS

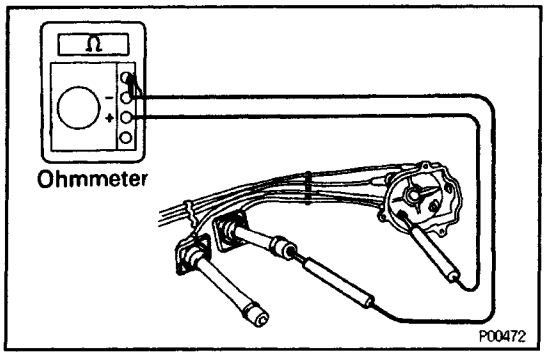

3. INSPECT HIGH –TENSION CORD RESISTANCE

Using an ohmmeter, measure the resistance without disconnecting the distributor cap.

Maximum resistance:

25 kΩ per cord

If the resistance is greater than maximum, check the terminals. If necessary, replace the high–tension cord and/or distributor cap.

4. REINSTALL DISTRIBUTOR CAP

5. RECONNECT HIGH–TENSION CORDS TO SPARK PLUGS

IG00X–02

SPARK PLUGS INSPECTION

NOTICE:

- **Never use a wire brush for cleaning.**
- **Never attempt to adjust the electrode gap on used spark plug.**
- **Spark plug should be replaced every 100,000 km (60,000 miles).**

1. DISCONNECT HIGH–TENSION CORDS FROM SPARK PLUGS

2. INSPECT ELECTRODE

Using a megger (insulation resistance meter), measure the insulation resistance.

Standard correct insulation resistance:

10 MΩ or more

If the resistance is less than specified, proceed to step 3.

HINT: If a megger is not available, the following simple method of inspection provides fairly accurate results.

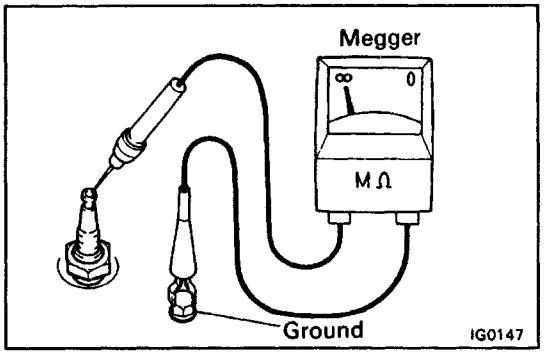

(Simple Method)

(a) Quickly race the engine to 4,000 rpm five times.
(b) Remove the spark plug. (See step 3)
(c) Visually check the spark plug.
If the electrode is dry ... Okay
If the electrode is wet ... Proceed to step 4
(d) Reinstall the spark plug. (See step 7)

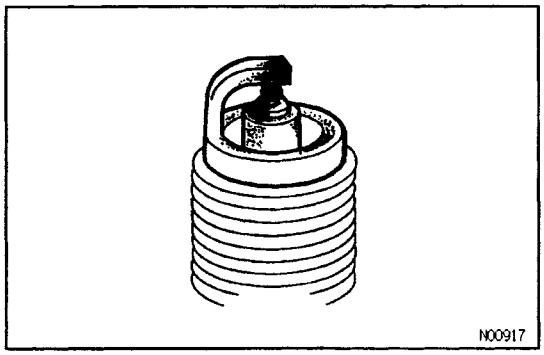

3. REMOVE SPARK PLUGS

Using a 16 mm plug wrench, remove the spark plug.

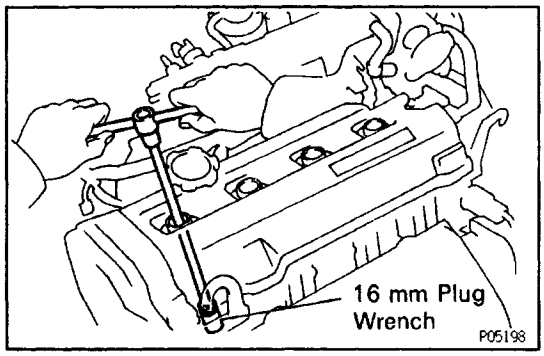

4. VISUALLY INSPECT SPARK PLUGS

Check the spark plug for thread damage and insulator damage.

If abnormal, replace the spark plug.

Recommended spark plug:

ND PK20R11

NGK BKR6EP–11

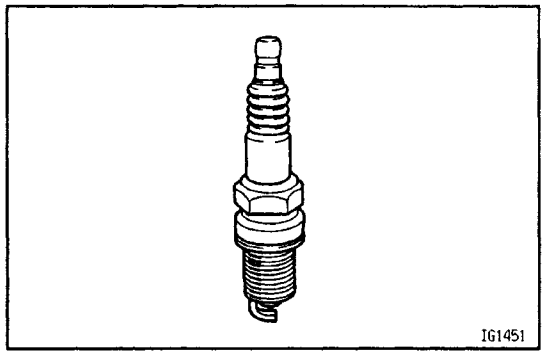

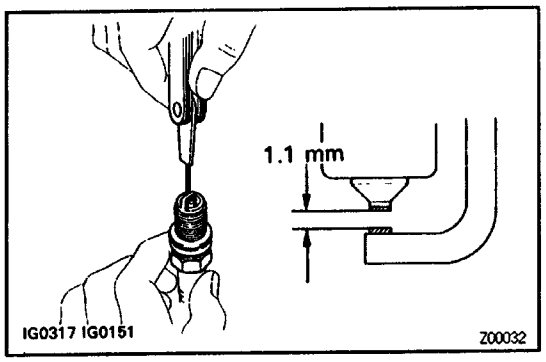

5. INSPECT ELECTRODE GAP

Maximum electrode gap:

1.3 mm (0.051 in.)

If the gap is greater than maximum, replace the spark plug.

Correct electrode gap of new spark plug:

1.1 mm (0.043 in.)

NOTICE: If adjusting the gap of a new spark plug, bend only the bas a of the ground electrode. Do not touch the tip. Never attempt to adjust the gap on the used plug.

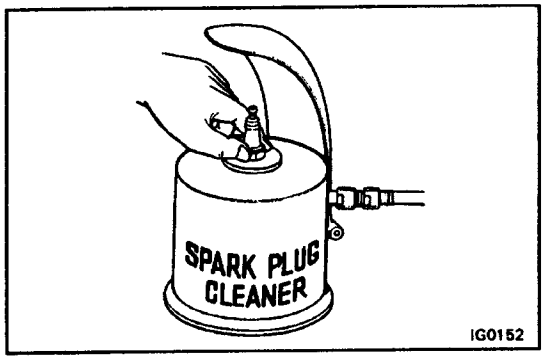

6. CLEAN SPARK PLUGS

If the electrode has traces of wet carbon, allow it to dry and then clean with a spark plug cleaner.

Air pressure:

Below 588 kPa (6 kgf/cm2, 85 psi)

Duration:

20 seconds or less

HINT: If there are traces of oil, remove it with gasoline before using the spark plug cleaner.

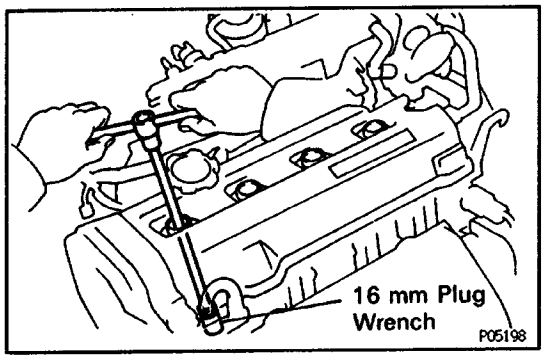

7. INSTALL SPARK PLUGS

Using a 1 6 mm plug wrench, install the spark plug.

Torque: 18 N–m (180 kgf–cm, 13 ft–tbf)

8. RECONNECT HIGH–TENSION CORDS TO SPARK PLUGS

IG03U–01

DISTRIBUTOR INSPECTION

NOTICE: "Cold" and "Hot' in the following sentences express the temperature of the coils themselves. 'Cold' is from –10˚C (14˚F) to 50˚C (104˚F) and 'Hot" is from 50˚C (104˚F) to 100˚C (212˚F).

1. DISCONNECT DISTRIBUTOR CONNECTORS

2. REMOVE DISTRIBUTOR CAP

3. REMOVE ROTOR

4. REMOVE IGNITION COIL DUST COVER

Ignition Coil

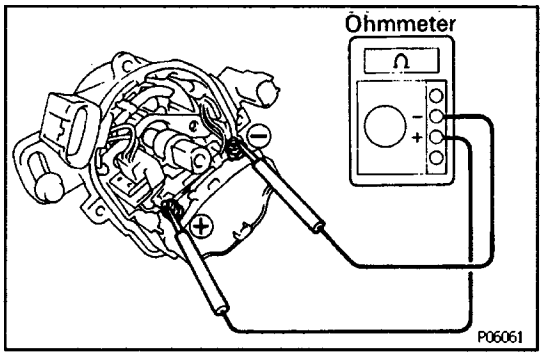

5. INSPECT PRIMARY COIL RESISTANCE

Using an ohmmeter, measure the resistance between the positive (+) and
negative (–) terminals.

Primary coil resistance (Cold):

0.36–0.55Ω

Primary coil resistance (Hot):

0.45 – 0.65Ω

If the resistance is not as specified, replace the ignition coil.

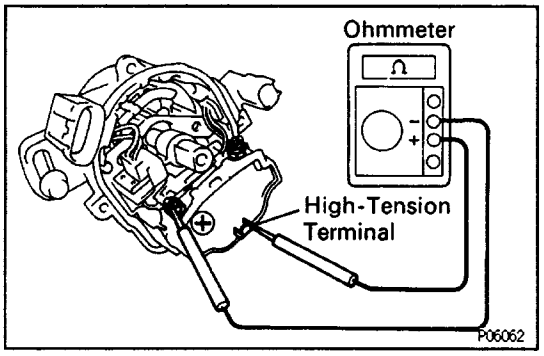

6. INSPECT SECONDARY COIL RESISTANCE

Using an ohmmeter, measure the resistance between positive (+) and high–tension terminals.

Secondary coil resistance (Cold):

9.0 – 15.4 kΩ

Secondary coil resistance (Hot):

11.4 – 18.1 kΩ

If the resistance is not as specified, replace the ignition coil.

Distributor

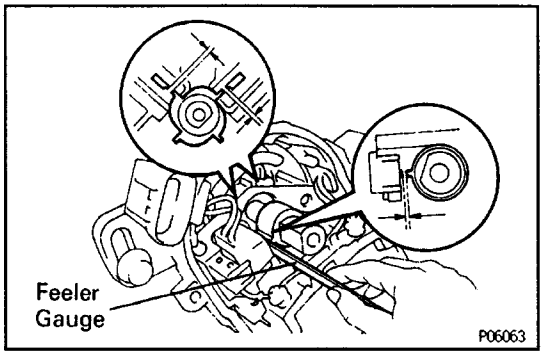

7. INSPECT AIR GAP

Using a feeler gauge, measure the air gap between the signal rotor and pickup coil projection.

Air gap:

0.2 – 0.4 mm (0.008 – 0.016 in.)

If the air gap is not as specified, replace the distributor housing assembly.

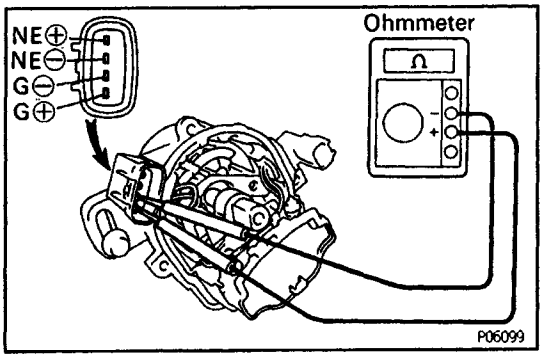

8. INSPECT SIGNAL GENERATOR (PICKUP COIL) RESISTANCE

Using an ohmmeter, measure the resistance between the terminals.

Pickup coil resistance (Cold):

G(+) and G(–)

185–275Ω

NE(+) and NE (–)

370–550Ω

Pickup coil resistance (Hot):

G(+) and G(–)

240–325Ω

NE(+) and G(–)

475–650Ω

If the resistance is not as specified, replace the distributor housing assembly.

9. REINSTALL IGNITION COIL DUST COVER

10. REINSTALL ROTOR

11. REINSTALL DISTRIBUTOR CAP

12. RECONNECT DISTRIBUTOR CONNECTORS

IG00Z–02

IGNITER INSPECTION

(See procedure Spark Plug)

SYSTEM CIRCUIT

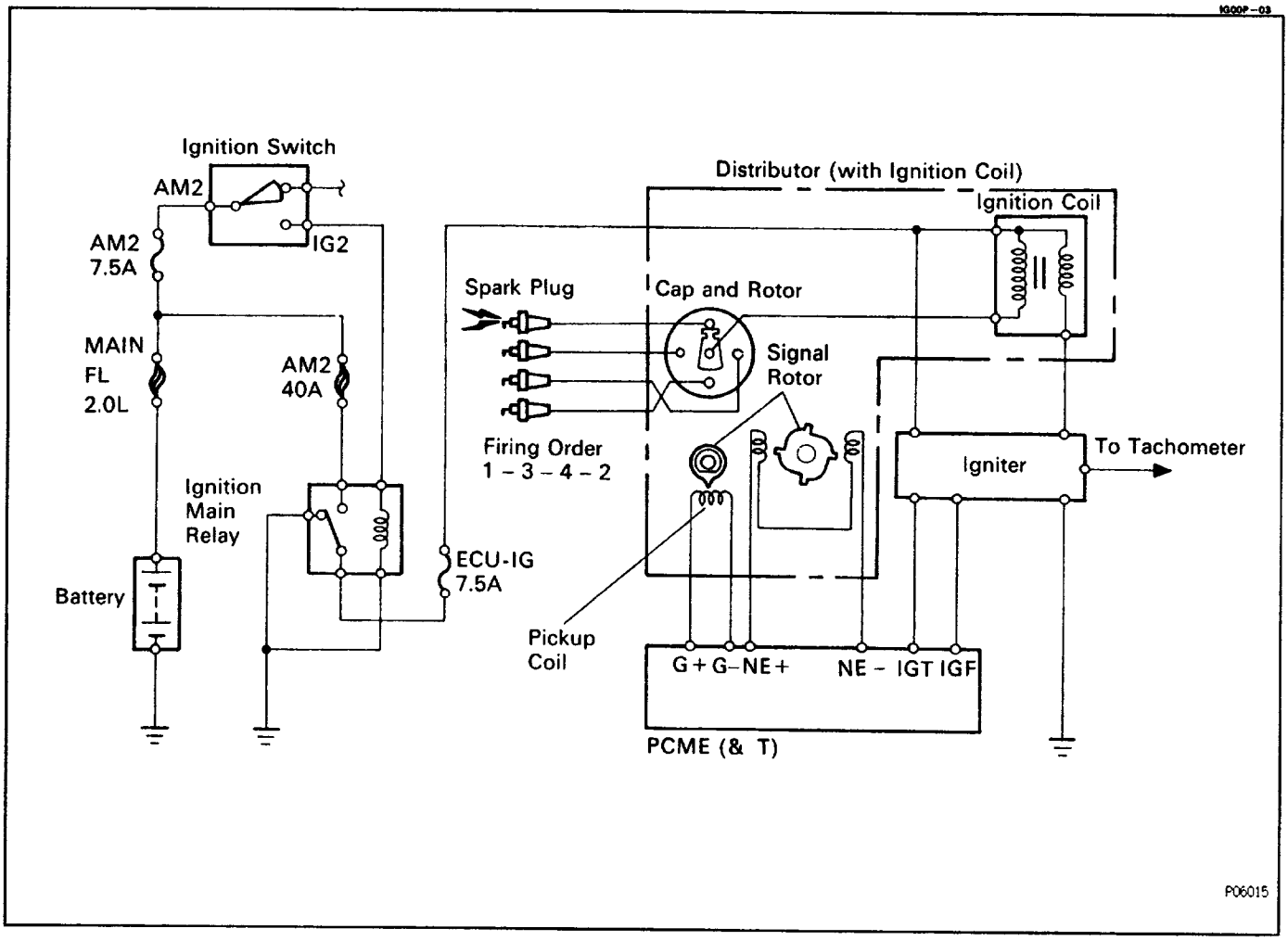

OPERATION

To maintain the most appropriate ignition timing, the PCME (& T) sends a control signal so that the igniter sends current to the ignition coil and the spark plugs produce a spark.

PRECAUTION

1. Do not leave the ignition switch on for more than 10 minutes if the engine does not start.

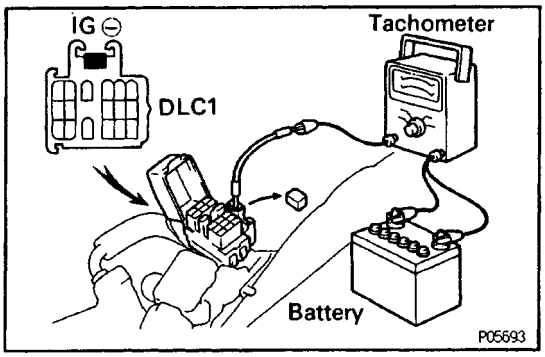

2. With a tachometer connected to the system, connect the test probe of the tachometer to terminal IG (–) of the data link connector 1.

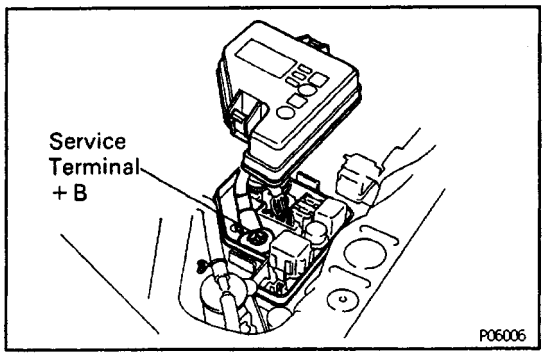

3. With a tachometer connected to the system, connect the power source probe of the tachometer to service terminal +B of the engine compartment relay box.

4. As some tachometers are not compatible with this ignition system, we recommend that you confirm the compatibility of your before use.

5. Never allow the tachometer terminals to touch ground as it could result in damage to the igniter and/or ignition coil.

6. Do not disconnect the battery while the engine is running.

7. Check that the igniter is properly grounded to the body.

PREPARATION

IG00R–01

SST (SPECIAL SERVICE TOOLS)

	09843–18020 Diagnosis Check Wire	

IG00S–01

RECOMMENDED TOOLS

	09062–00015 TOYOTA Electrical Tester	
	09200–00010 Engine Adjust Kit	

IG00T–01

EQUIPMENT

Megger insulation resistancemeter	Insulation resistance meter
Spark plug cleaner	
Tachometer	
Timing light	Ignition timing

IG00U–01

SSM (SPECIAL SERVICE MATERIALS)

0882–00080 Seal packing or equivalent	Ignition coil

IGNITION MAIN RELAY

(See 3S–GTE Engine)

ST014–08

SERVICE SPECIFICATIONS

IG016–02

SERVICE DATA

Ignition timing	w/ Terminals TE1 and E1 connected		10° BTDC @ idle
Firing order	–		1 – 3 –4– 2
High–tension cord	Resistance (Maximum)		25 kΩ per cord
Spark plug	Recommended spark plug	ND	PK20R11
	Recommended spark plug	NGK	BKR6EP–11
	Correct electrode gap		1.1 mm (0.043 in.)
	Maximum electrode gap of used plug		1.3 mm (0.051 in.)
Ignition coil	Primary coil resistsnce (Cold)		0.36 – 0.55 Ω
	Primary coil resistance (Hot)		0.45–0.65 Ω
	Secondary coil resistsnce (Cold)		9.0 – 15.4 k Ω
	Secondary coil resistance (Hot)		11.4 – 18.1 k Ω
Distributor	Air gap		0.2 – 0.4 mm (0.008 – 0.016 in.)
	Signal generator (pickup coil) resistance (Cold)		
	G(+) – G(–)		185 – 275 Ω
	NE(+) – NE(–)		370 – 550 Ω
	Signal generator (pickup coil) resistance (Hot)		
	G(+) – G(–)		240 – 325 Ω
	NE(+) – NE(–)		475 – 650 Ω

IG017–01

TORQUE SPECIFICATIONS

Part tightened	N–m	kgf–cm	ft–lbf
Spark plug x Cylinder head	**18**	180	**13**
Distributor x Cylinder head	**19**	195	**14**

SYSTEM CIRCUIT

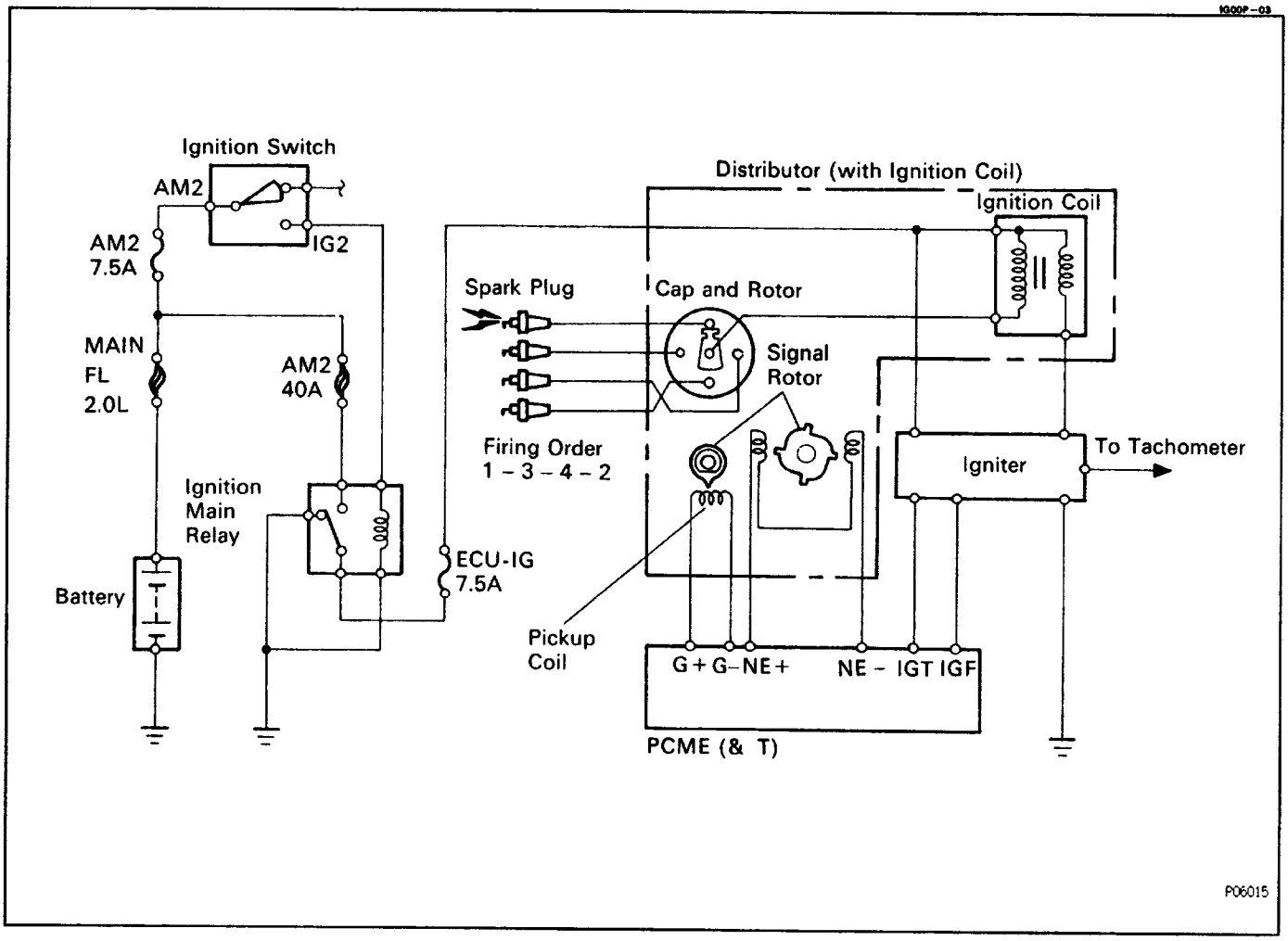

OPERATION

To maintain the most appropriate ignition timing, the PCME (& T) sends a control signal so that the igniter sends current to the ignition coil and the spark plugs produce a spark.

ABBREVIATIONS USED IN THIS MANUAL

IN008–01

ABS	Anti–Lock Brake System
A/C	Air Conditioner
Approx.	Approximately
A/T	Automatic Transaxle
ATF	Automatic Transmission Fluid
BTDC	Before Top Dead Center
CALI F.	Vehicles Sold in California
CB	Circuit Breaker
CD	Compact Disc
DP	Dash Pot
ECU	Electronic Control Unit
ELR	Emergency Locking Retractor
EX	Exhaust (manifold, valve)
Ex.	Except
Fl PG	Formed in Place Gasket
FL	Fusible Link
FR	Front
IN	Intake (manifold, valve)
IG	Ignition
J/B	Junction Block
LED	Light Emitting Diode
LH	Left–Hand
Max.	Maximum
M P	Multipurpose
M/T	Manual Transaxle
OD, O/D	Overdrive
O/S	Oversize
P & BV	Proportioning and Bypass Valve
PCV	Positive Crankcase Ventilation
PS	Power Steering
RH	Right–Hand
RR	Rear
SRS	Supplemental Restraint System
SSM	Special Service Materials
SST	Special Service Tools
STD	Standard
SW	Switch
TD C	Top Dead Center
T–VIS	Toyota–Variable Induction System
U / D	Underdrive
U /S	Undersize
VSV	Vacuum Switching Valve
w/	With
w/o	Without

V00851

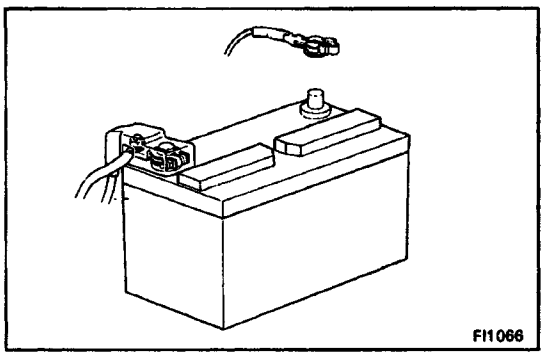

GENERAL REPAIR INSTRUCTIONS

woa–w

1. Use fender, seat and floor covers to keep the vehicle clean and prevent damage.
2. During disassembly, keep parts in the appropriate order to facilitate reassembly.
3. Observe the following:

   CAUTION: Work must be started after approx. 20 sec–onds or longer from the time the ignition switch is turned to the ”LOCK’ position and the negative (–) terminal cable is disconnected from the battery (See page AB–2).

   (a) Before performing electrical work, disconnect the negative cable from the battery terminal.
   (b) If it is necessary to disconnect the battery for inspection or repair, always disconnect the cable from the negative (–) terminal which is grounded to the vehicle body.
   (c) To prevent damage to the battery terminal post, loosen the terminal nut and raise the cable str–aight up without twisting or prying it.
   (d) Clean the battery terminal posts and cable ter–minals with a shop rag. Do not scrape them with a file or other abrasive objects.
   (e) Install the cable terminal to the battery post with the nut loose, and tighten the nut after installa–tion. Do not use a hammer to tap the terminal onto the post.
   (f) Be sure the cover for the positive (+) terminal is properly in place.
4. Check hose and wiring connectors to make sure that they are secure and correct.
5. Non–reusable parts
   (a) Always replace cotter pins, gaskets, 0 –rings and oil seals etc. with new ones.
   (b) Non–reusable parts are indicated in the com–ponent illustrations by the ”♦” symbol.

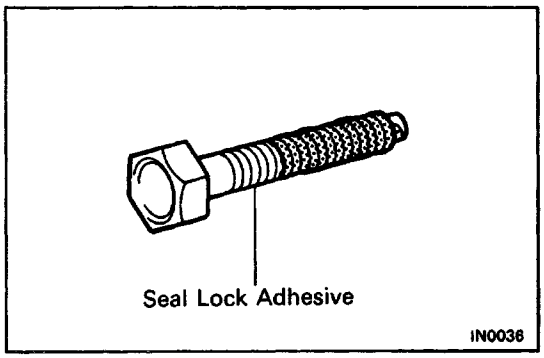

6. Precoated parts are bolts and nuts, etc. that are coated with a seal lock adhesive at the factory.
   (a) If a precoated part is retightened, loosened or caused to move in any way, it must be recoated with the specified adhesive.

(b) When reusing precoated parts, clean off the old adhesive and dry with compressed air. Then apply the specified seal lock adhesive to the bolt, nut or threads.

(c) Precoated parts are indicated in the component illustrations by the "★" symbol.

7. When necessary, use a sealer on gaskets to prevent leaks.
8. Carefully observe all specifications for bolt tightening torques. Always use a torque wrench.
9. Use of special service tools (SST) and special service materials (SSM) may be required, depending on the nature of the repair. Be sure to use SST and SSM where specified and follow the proper work proce–dure. A list of SST and SSM can be found in the preparation part at the front of each section in this manual.

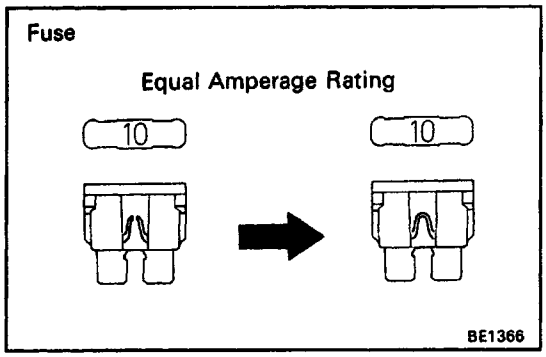

10. When replacing fuses, be sure the new fuse has the correct amperage rating. DO NOT exceed the rating or use one with a lower rating.

Illustration	Symbol	Part Name	Abbreviation
 BE5594	 IN0365	FUSE	FUSE
 BE5595	 IN0366	MEDIUM CURRENT FUSE	M–FUSE
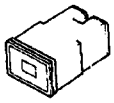 BE5596	 IN0367	HIGH CURRENT FUSE	H–FUSE
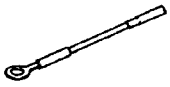 BE5597	 IN0367	FUSIBLE LINK	FL
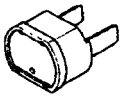 BE5598	 IN0368	CIRCUIT BREAKER	CB

11. Care must be taken when jacking up and supporting the vehicle. Be sure to lift and support the vehicle at the proper locations (See page IN–17)
    (a) If the vehicle is to be jacked up only at the front or rear end, be sure to block the wheels at the opposite end in order to ensure safety.
    (b) After the vehicle is jacked up, be sure to support it on stands. It is extremely dangerous to do any work on a vehicle raised on a jack alone, even for a small job that can be finished quickly.
12. Observe the following precautions to avoid damage to the parts:
    (a) Do not open the cover or case of the ECU unless absolutely necessary. (If the IC terminals are touched, the IC may be destroyed by static ele–ctricity.)

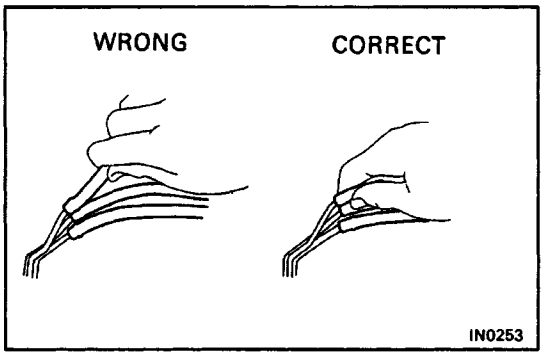

    (b) To disconnect vacuum hoses, pull on the end, not the middle of the hose.
    (c) To pull apart electrical connectors, pull on the connector itself, not the wires.
    (d) Be careful not to drop electrical components, such as sensors or relays. If they are dropped on a hard floor, they should be replaced and not reused.
    (e) When steam cleaning an engine, protect the distributor, air filter, and VCV from water.
    (f) Never use an impact wrench to remove or install temperature switches or temperature sensors.
    (g) When checking continuity at the wire connector, insert the tester probe carefully to prevent ter–minals from bending.
    (h) When using a vacuum gauge, never force the hose onto a connector that is too large. Use a step–down adapter instead. Once the hose has been stretched, it may leak.

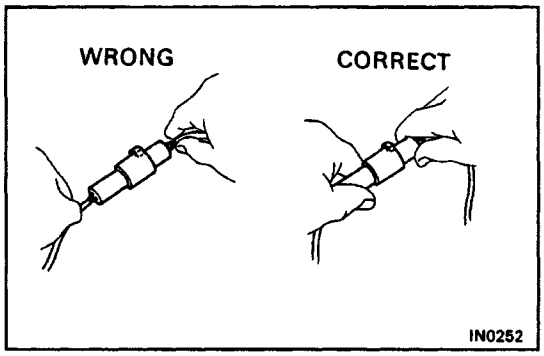

13. Tag hoses before disconnecting them:
    (a) When disconnecting vacuum hoses, use tags to identify how they should be reconnected.
    (b) After completing a job, double check that the vacuum hoses are properly connected. A label under the hood shows the proper layout.

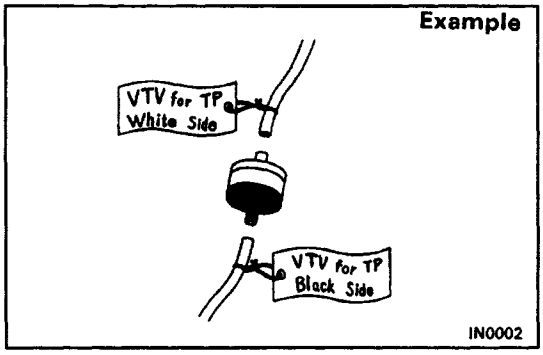

GLOSSARY OF SAE AND TOYOTA TERMS

This glossary lists all SAE–J 1930 terms and abbreviations used in this manual in compliance with SAE recommendations, as well as their Toyota equivalents.

SAE ABBRE–VIATIONS	SAE TERMS	TOYOTA TERMS ( ) – –ABBREVIATIONS
ACH	Air Cleaner Housing	Air Cleaner
ACS	Air Conditioning Sensor	Air Conditioner Switch
AFS	Air Flow Sensor	Air Flow Meter
AIR	Secondary Air Injection	Air Injection (AI)
ALT	Alternator	Alternator
B+	Battery Positive Voltage	+B, Battery Voltage
BARD	Barometric Absolute Pressure Sensor	HAC Sensor or P Sensor
CAC	Charge Air Cooler	Intercooler
CARB	Carburetor	Carburetor
CL	Closed Loop	Closed Loop
CLS	Closed Loop System	Closed Loop System
CPS	Crankshaft Position Sensor	Crank Angle Sensor
DI	Direct Injection (Diesel)	Direct Injection (D1)
DLC1 DLC2	Data Link Connector	1: Check Connector 2: TDCL
DLI	Distributorless Ignition	Distributorless Ignition (DLI)
OTC	Diagnostic Trouble Codes	Diagnostic Codes
ECTS	Engine Coolant Temperature Sensor	Coolant Temperature Sensor, Water Temperature Sensor or THW
EEPROM	Electrically Erasable Programmable Read Only Memory	Electrically Erasable Programmable Read Only Memory (EEPROM), Erasable Programmable Read Only Memory (EPROM)
EFE	Early Fuel Evaporation	Cold Mixture Heater (CMH), Heat Control Valve (HCV)
EG R	Exhaust Gas Recirculation	Exhaust Gas Recirculation (EGR)
EG RS	EGR Function Sensor	EGR Gas Temperature Sensor
EGRV	EGR Valve	EGR Valve
EI	Electronic Ignition	Electronic Spark Advance (ESA)
EM	Engine Modification	Engine Modification (EM)
EPROM	Electrically Programmable Read Only Memory	Programmable Read Only Memory (PROM)
EV AP	Fuel Evaporative System	Evaporative Emission Control (EVAP)
FPR	Fuel Pump Relay	Fuel Pump Relay
GND	Ground	Ground (GND)
H02S	Heated Oxygen Sensor	Heated Oxygen Sensor (H02S)
IACV	Idle Air Control Valve	ISC Valve
IATS	Intake Air Temperature Sensor	Intake or Inlet Air Temperature Sensor
IDI	Indirect Diesel Injection	Indirect Injection Diesel Engine
KS	Knock Sensor	Knock Sensor
MAP	Manifold Absolute Pressure Sensor	Manifold Pressure Sensor Turbocharger Pressure Sensor Vacuum Sensor
MCS	Mixture Control Solenoid	Electric Bleed Air Control Valve (EBCV) Electric Air Control Valve (EACV)
MPI	Multipoint Electronic Fuel Injection	Electronic Fuel Injection (EFI)

02s	Oxygen Sensor	Oxygen Sensor, 02 Sensor (02S)
OBD	On –Board Diagnostic System	On–Board Diagnostic System (OBD)
OC	Oxidation Catalyst	Oxidation Catalyst (0C), CCo
OL	Open Loop	Open Loop
PAIR	Pulsed Secondary Air	Air Suction (AS)
PCME	Powertrain Control Module (Engine)	Engine ECU
PCM E&T	Powertrain Control Module (Engine and Transmission)	Engine & ECT ECU
PCMT	Powertrain Control Module (Transmission)	ECT–ECU, Transmission ECU
PNS	Park/Neutral Switch	Neutral Start Switch (NSW)
PTCS	Powertrain Control Signals	Output Signals
PTIS	Powertrain Input Signals	Input Signals
RAM	Random Access Memory	Random Access Memory (RAM)
ROM	Read Only Memory	Read Only Memory (ROM)
SABFV	Secondary Air Anti –Backfire Valve	Check Valve
SABV	Secondary Air By–Pass Valve	Air By–Pass Valve (ABV)
SAPV	Secondary Air Pulse Valve	AS Reed Valve, Air Suction Valve
SASV	Secondary Air Switching Valve	Air Switching Valve (ASV)
SC	Supercharger	Supercharger
SMPI	Sequential Multipoint Electronic Fuel Injection	Electronic Fuel Injection (EFI), Sequential Injection
SPS	Steering Pressure Sensor	Air Control Valve (ACV)
TB	Throttle Body	Throttle Body
TBI	Throttle Body Electronic Fuel Injection	Single Point Injection Central Fuel Injection (Ci)
TC	Turbocharger	Turbocharger
TCC	Transmission/Transaxle Converter Clutch Switch	Lock –Up Solenoid
TGSS	Transmission Gear Selection Switch	Shift Position Switch
TOP	Trap Oxidizer–Periodic	Diesel Particulate Filter (DPF) Diesel Particulate Trap (DPT)
TPS	Throttle Position Sensor	Throttle Position Sensor
TVs	Thermal Vacuum Switch	Bimetal Vacuum Switching Valve (BVSV) Thermostatic Vacuum Switching Valve (TVSV)
TWC	Three Way Catalyst	Three Way Catalyst (TWC) CC_{RO}
VR	Voltage Regulator	Voltage Regulator
VSPG	Vehicle Speed Pulse Generator	Speed Sensor
VSS	Vehicle Speed Sensor	Vehicle Speed Sensor (Read Switch Type)
WOTS	Wide Open Throttle Switch	VL Switch Power Switch
WUTWC	Warm Up Three Way Catalyst	Manifold Converter

INTRODUCTION

HOW TO USE THIS MANUAL

IN002–01

INDEX

An INDEX is provided on the first page of each section to guide you to the item to be repaired. To assist you in finding your way through the manual, the Section Title and major heading are given at the top of every page.

GENERAL DESCRIPTION

At the beginning of each section, a General Description (Precautions) is given that pertains to all repair operations contained in that section.
Read these precautions before starting any repair task.

TROUBLESHOOTING

TROUBLESHOOTING tables are included for each system to help you diagnose the problem and find the cause.

PREPARATION

Preparation lists the SST (Special Service Tools), recommended tools, equipment, lubricant and SSM (Special Service Materials) which should be prepared before beginning the operation and explains the purpose of each one.

REPAIR PROCEDURES

Most repair operations begin with an overview illustration. It identifies the components and shows how the parts fit together.
Example:

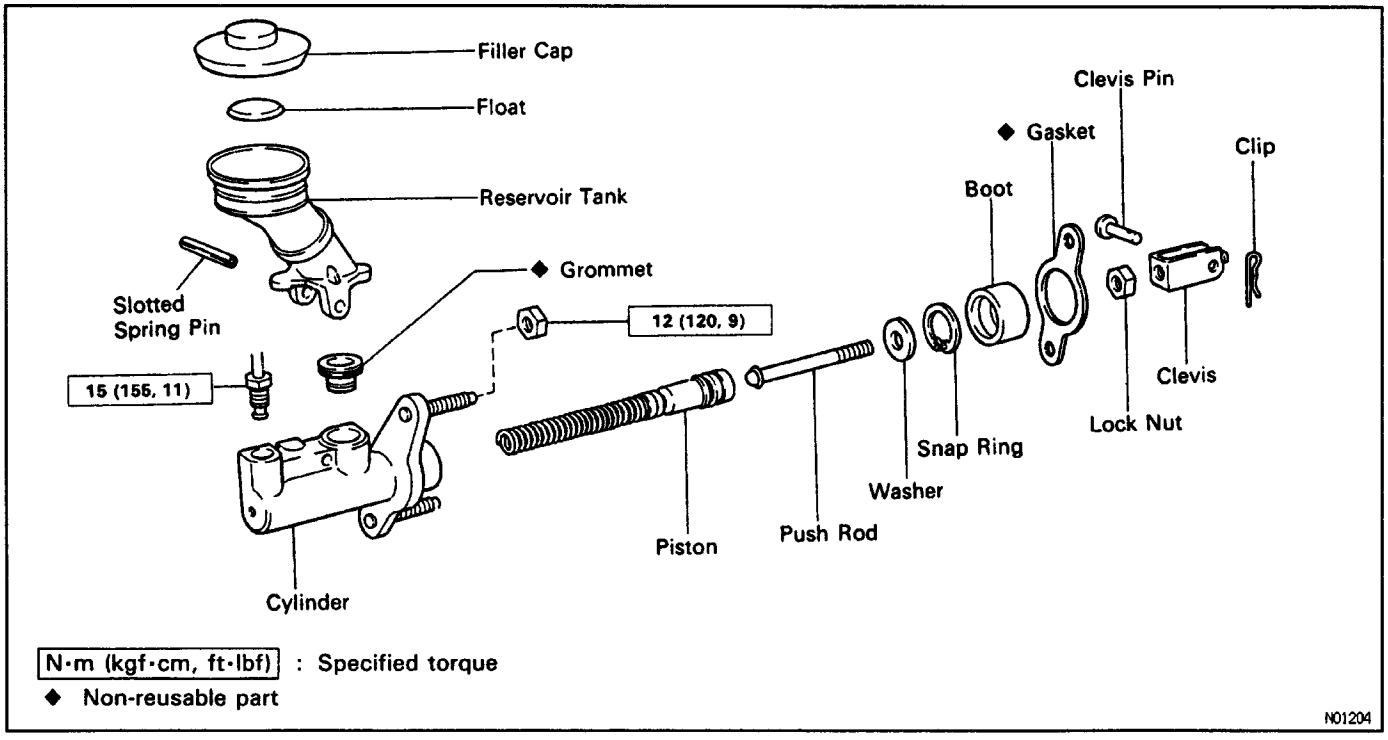

The procedures are presented in a step–by–step format:

- The illustration shows what to do and Where to do it.
- The task heading tells what to do.
- The detailed text tells how to perform the task and gives other information such as specifications and warnings.

Example:

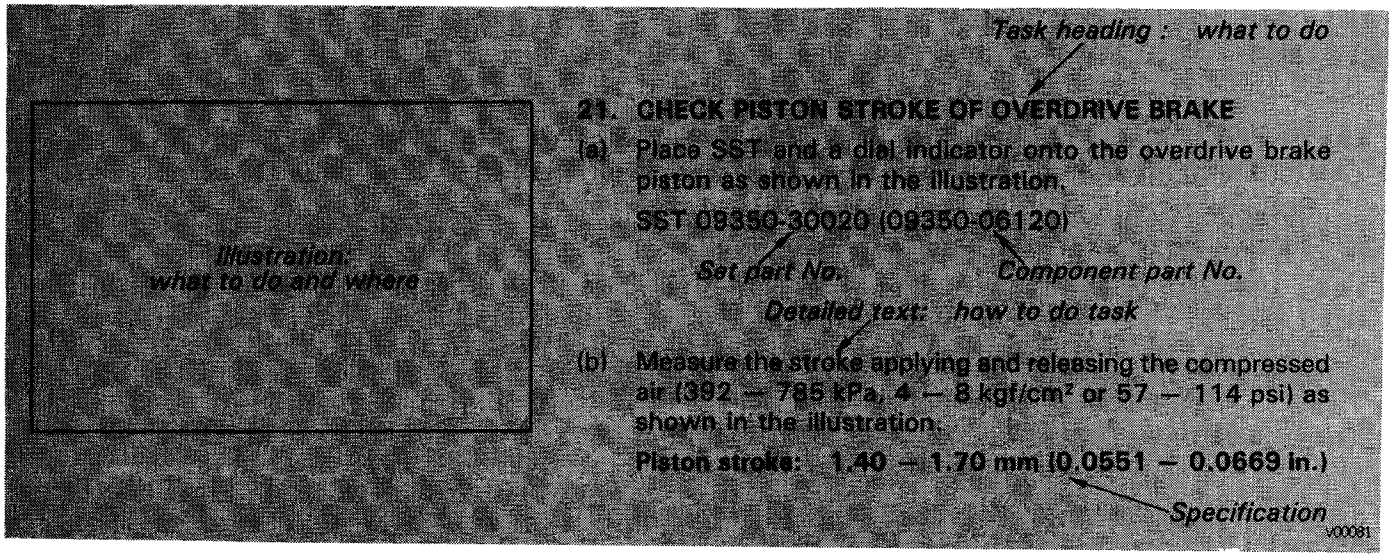

This format provides the experienced technician with a FAST TRACK to the information needed. The upper case task heading can be read at a glance when necessary, and the text below it provides detailed information. Important specifications and warnings always stand out in bold type.

REFERENCES

References have been kept to a minimum. However, when they are required you are given the page to refer to.

SPECIFICATIONS

Specifications are presented in bold type throughout the text where needed. You never have to leave the procedure to look up your specifications. They are also found at the end of each section, for quick reference.

CAUTIONS, NOTICES, HINTS:

- CAUTIONS are presented in bold type, and indicate there is a possibility of injury to you or other people.
- NOTICES are also presented in bold type, and indicate the possibility of damage to the components being repaired.
- HINTS are separated from the text but do not appear in bold. They provide additional information to help you efficiently perform the repair.

SI UNIT

The UNIT given in this manual are primarily expressed with the SI UNIT(International System of Unit), and alternately expressed in the metric system and in the yard/pound system.
Example:

Torque: 30 N–m (310 kgf–cm, 22 ft–lbf)

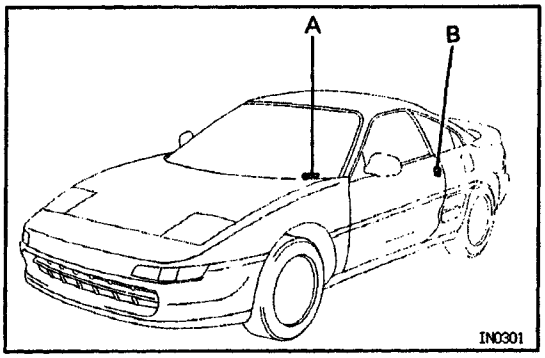

IDENTIFICATION INFORMATION

IN003-01

VEHICLE IDENTIFICATION NUMBER

The vehicle identification number is stamped on the vehicle identification number plate and certification label.

A. Vehicle Identification Number Plate

B. Certification Label

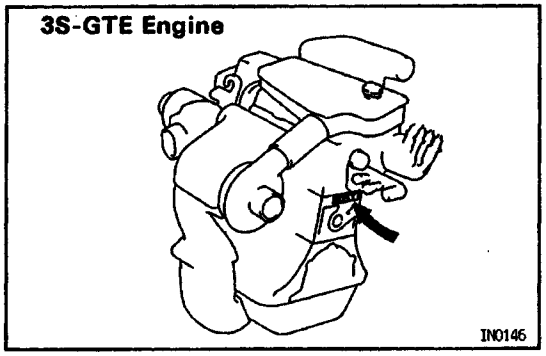

IN00A-01

ENGINE SERIAL NUMBER

The angina serial number is stamped on the engine block as shown.

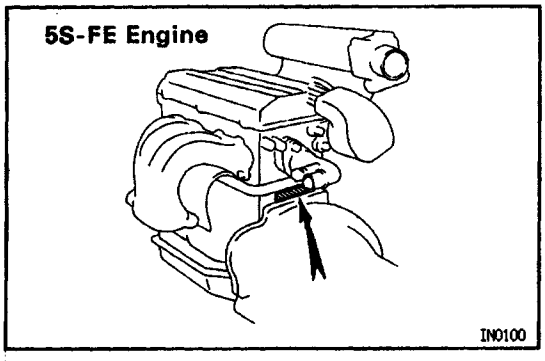

PRECAUTION

IN00E–05

FOR VEHICLES EQUIPPED WITH SRS AIRBAG

The 1993 MR2 specifications is equipped with an SRS (Supplemental Restraint System) airbag.
Failure to carry out service operations in the correct: sequence could cause the airbag system to unex–pectedly deploy during servicing, possibly leading to a serious accident.
Further, if a mistake is made in servicing the airbag system, it is possible the airbag may fail to operate when required. Before performing servicing (including removal or installation of parts, inspection or re–placement), be sure to read the following items care–fully, then follow the correct procedure described in this manual.

Locations of Airbag Components

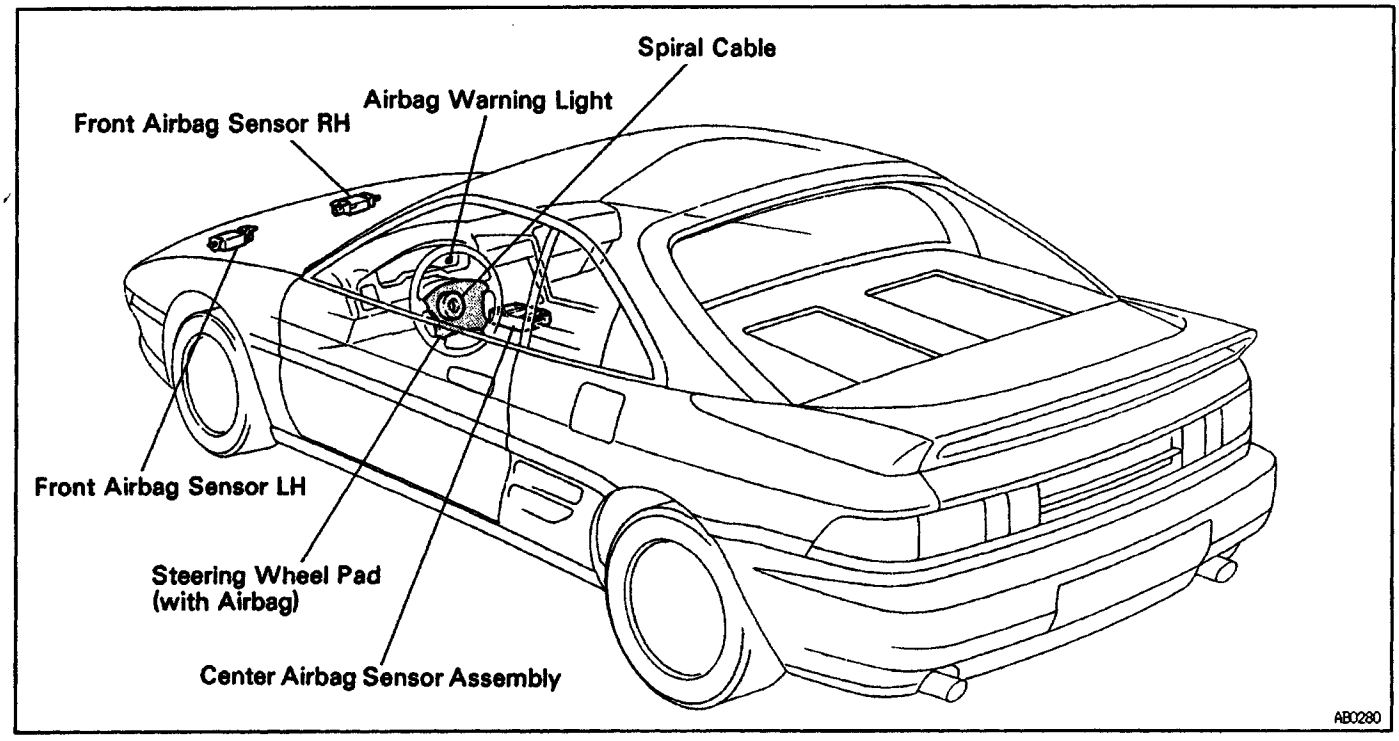

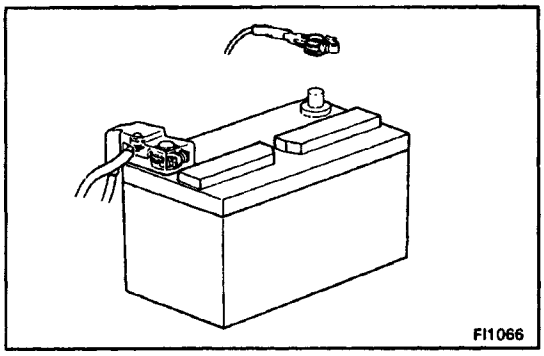

1. Malfunction symptoms of the airbag system are dif–ficult to confirm, so the diagnostic codes become the most important source of information when trouble–shooting. When troubleshooting the airbag system, always inspect the diagnostic codes before disconn–ecting the battery (See page AB–25).
2. **Work must be started after approx. 20 seconds or longer from the time the ignition switch is turned to the LOCK position and the negative (–) terminal cable is disconnected from the battery.**
   (The airbag system is equipped with a back–up power source so that if work is started within 20 seconds of disconnecting the negative (–) terminal cable of the battery, the airbag may be deployed.)
   When the negative (–) terminal cable is disconnected from the battery, memory of the clock and audio systems will be cancelled. So before starting work, make a record of the contents memorized by each memory system. Then when work is finished, reset the clock and audio systems as before.
   To avoid erasing the memory of each memory system, never use a back–up power supply from outside the vehicle.
3. Even in cases of a minor collision where the airbag does not deploy, the front airbag sensors and the steering wheel pad should be inspected (See page AB–11).
4. Never use airbag parts from another vehicle. When replacing parts, replace them with new parts.
5. Before repairs, remove the airbag sensors if shocks are likely to be applied to the sensors during repairs.
6. The center airbag sensor assembly contains mercury. After performing replacement, do not destroy the old part. When scrapping the vehicle or– replacing the center airbag sensor assembly itself, remove the center airbag sensor assembly and dispose of it as toxic waste.
7. Never disassemble and repair the front airbag sensors, center airbag sensor assembly or steering wheel pad in order to reuse it.
8. If the front airbag sensors, center airbag sensor as–sembly or steering wheel pad have been dropped, or if there are cracks, dents or other defects in the case, bracket or connector, replace them with new ones.
9. Do not expose the front airbag sensor–s, center airbag sensor assembly or steering wheel pad directly to hot air or flames.
10. Use a volt/ohmmeter with high impedance (10 kΩ/V minimum) for troubleshooting of the electrical circuit.

11. Information labels are attached to the periphery of the airbag components. Follow the notices.
12. After work on the airbag system is completed, perform the airbag warning light check (See page AB–30).

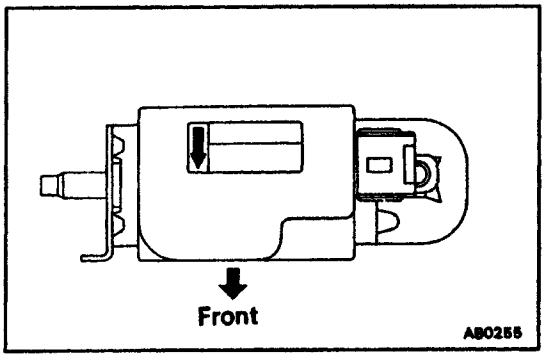

Front Airbag Sensor

1. Never reuse the front airbag sensors involved in a collision when the airbag has deployed. (Replace both left and right airbag sensors.)
2. Install the front airbag sensor with the arrow on the sensor facing toward the front of the vehicle.
3. The front airbag sensor set bolts have been anti–rust treated. When the sensor is removed, always replace the set bolts with new ones.
4. The front airbag sensor is equipped with an electrical connection check mechanism. Be sure to lock this mechanism securely when connecting the connector. If the connector is not securely locked, a malfunction code will be detected by the diagnosis system (See page AB–9).

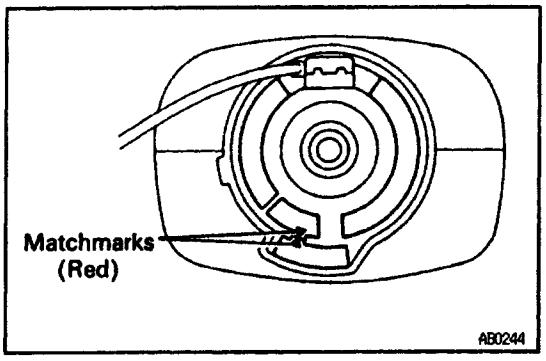

Spiral Cable (in Combination Switch)

The steering wheel must be fitted correctly to the steering column with the spiral cable at the neutral position; otherwise cable disconnection and other troubles may result. Refer to page **AB–16** concerning correct steering wheel installation.

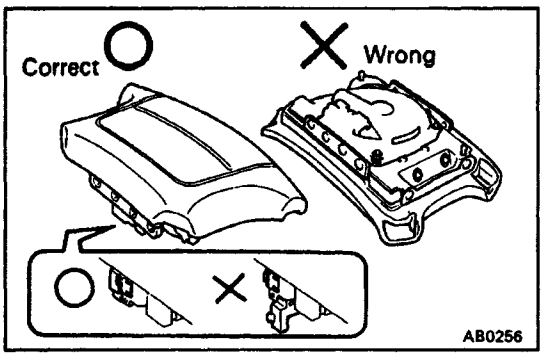

Steering Wheel Pad (with Airbag)

1. When removing the steering wheel pad or handling a new steering wheel pad, it should be placed with the pad top surface facing up.
   In this case, the twin–lock type connector lock lever should be in the locked state and care should be taken to place it so the connector will not be damaged. And do not store a steering wheel pad on top of another one. (Storing the pad with its metallic surface up may lead to a serious accident if the airbag inflates for some reason.)
2. **Never measure the resistance of the airbag squib. (This may cause the airbag to deploy, which is very dangerous.)**

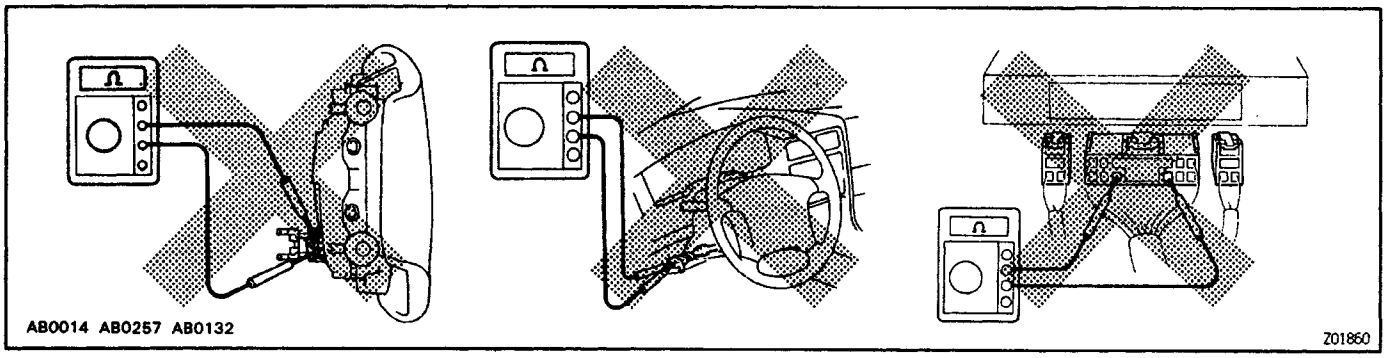

3. Grease should not be applied to the steering wheel pad and the pad should not be cleaned with deter–gents of any kind.
4. Store the steering wheel pad where the ambient temperature remains below 90* C (200˚ F), without high humidity and away from electrical noise.
5. When using electric welding, first disconnect the airbag connector (yellow color and 2 pins) under the steering column near the combination switch con–nector before starting work.
6. **When disposing of a vehicle or the steering wheel pad alone, the airbag should be deployed using an SST before disposal (See page AB–83). Perform the operation in a place away from electrical noise.**

Center Airbag Sensor Assembly

The connector to the center airbag sensor assembly should be connected or disconnected with the sensor mounted on the floor. If the connector is connected or disconnected while the center airbag sensor as–sembly is not mounted to the floor, it could cause undesired ignition of the airbag system.

Wire Harness and Connector

The airbag system's wire harness is integrated with the cowl wire harness assembly. The wires for the airbag wire harness are encased in a yellow corruga–ted tube. All the connectors for the system are also a standard yellow color. If the airbag system wire har–ness becomes disconnected or the connector bec–omes broken due to an accident, etc., repair or replace it as shown on page AB–22.

FOR VEHICLES EQUIPPED WITH A CATALYTIC CONVERTER

IN006–03

CAUTION: If large amounts of unburned gasoline flow into the converter, it may overheat and create a fire hazard. To prevent this, observe the following precautions and explain them to your customer.

1. Use only unleaded gasoline.

2. Avoid prolonged idling.

Avoid running the engine at idle speed for more than 20 minutes.

3. Avoid spark jump test.

(a) Perform spark jump test only when absolutely necessary. Perform this test as rapidly as possible.

(b) While testing, never race the engine.

4. Avoid prolonged engine compression measurement.

Engine compression tests must be done as rapidly as possible.

5. Do not run engine when fuel tank is nearly empty.

This may cause the engine to misfire and create an extra load on the converter.

6. Avoid coasting with ignition turned off and prolonged braking.

7. Do not dispose of used catalyst along with parts contaminated with gasoline or oil.

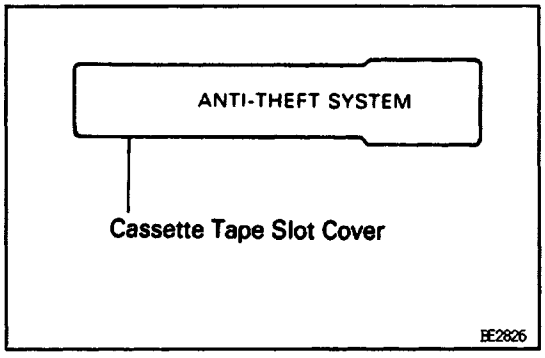

FOR VEHICLES WITH AN AUDIO SYSTEM WITH BUILT–IN ANTI–THEFT SYSTEM

Audio System displaying the sign ”ANTI – THEFT SYSTEM” shown on the left has a built–in anti–theft system which makes the audio system soundless if stolen.

If the power source for the audio system is cut even once, the anti–theft system operates so that even if the power source is reconnected, the audio system will not produce any sound unless the ID number selected by the customer is input again. Accordingly, when performing repairs on vehicles equipped with this system, before disconnecting the battery terminals or removing the audio system the customer should be asked for the ID number so that the technician can input the ID number afterwards, or else a request made to the customer to input the ID number. For the method to input the ID number or cancel the anti–theft system, refer to the Owner’s Manual.

..a

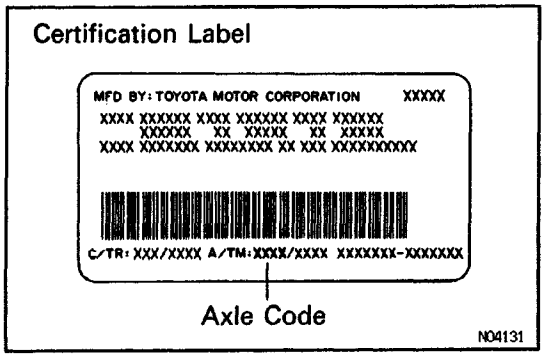

FOR VEHICLES EQUIPPED WITH VISCOUS COUPLING TYPE LIMITED SLIP DIFFERENTIAL

In the El 53 transaxle in the 1993 MR2, a viscous coupling type limited slip differential is offered as option. To determine whether the vehicle has this type of differential, refer to the Certification Label. On the bottom line of the label, if the last digit of the axle code is ”5”, the vehicle is equipped with limited slip differential. A variation in the rotation between the drive wheels creates viscous torque which results in decreased difference in driving rotation. For durability of the differential and safety reasons, observe the following procedures when performing on–the–car wheel balancing on the rear wheels of vehicles equ–ipped with this transaxle:

NOTICE:

(a) Lift the vehicle, making sure that all wheels are completely off the floor.

(b) Drive the wheels with the vehicle’s own engine, without the aid of any exterior power source.

(e) Release the parking brake lever completely.

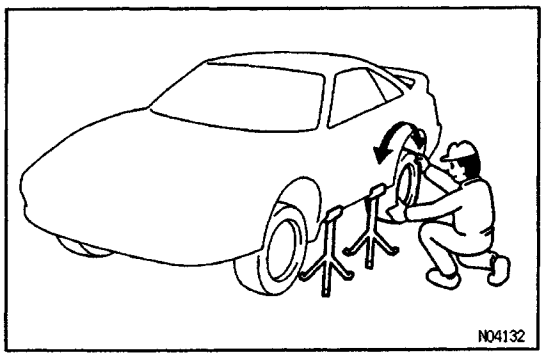

(d) Do not allow any of the brakes to drag.

(e) Avoid sudden acceleration, deceleration, and bra–king.

(f) Drive the wheels with transmission in 3rd or 4th gear.

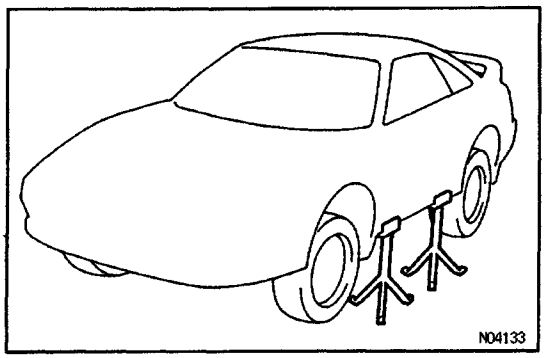

1. LIFT THE VEHICLE, MAKE SURE ALL WHEELS ARE OFF THE FLOOR, READY TO SPIN

Make sure the vehicle is firmly supported on stands, as the wheels will be spinning at high speed.

2. RELEASE THE PARKING LEVER COMPLETELY

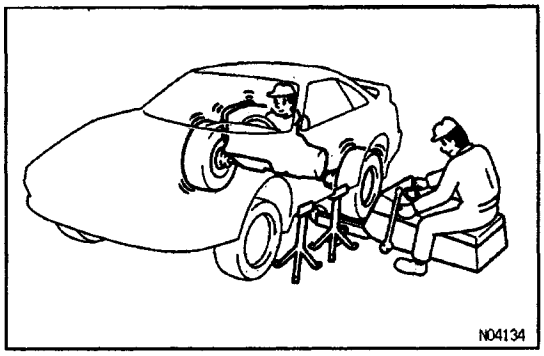

3. PLACE THE WHEEL BALANCER AGAINST THE WHEEL TO BE BALANCED

Follow the procedures specified by the manufacturer of the wheel balancer.

4. INSTALL THE PICK – UP STANDS UNDER THE REAR SUSPENSION

5. START THE ENGINE

6. PUT TRANSMISSION INTO 3RD OR 4TH GEAR

7. ENGAGE CLUTCH SLOWLY, AND GRADUALLY ACCELERATE TO TEST SPEED

NOTICE: Be careful of the other wheel which will be spinning at the same time.

STANDARD BOLT TORQUE SPECIFICATIONS

IN0C8–01

HOW TO DETERMINE BOLT STRENGTH

	Mark	Class		Mark	Class
Hexagon head bolt	 Bolt head No. 4– 5– 6– 7– 8– 9– 10– 11 –	4T 5T 6T 7T 8T 9T 10T 11T	Stud bolt	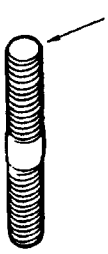 No mark	**4T**
	 No mark	**4T**		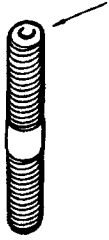 Grooved	**6T**
Hexagon flange bolt w/ washer hexagon bolt	 No mark	**4T**			
Hexagon head bolt	 Two protruding lines	**5T**			
Hexagon flange bolt w/ washer hexagon bolt	 Two protruding lines	**6T**	Welded bolt	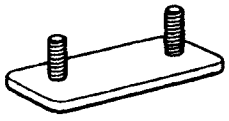	**4T**
Hexagon head bolt	 Three protruding lines	**7T**			
Hexagon head bolt	 Four protruding lines	**8T**			

V00078

SPECIFIED TORQUE FOR STANDARD BOLTS

Class	Diameter mm	Pitch mm	Specified torque					
			Hexagon head bolt			Hexagon flange bolt		
			N–m	kgf–cm	ft·lbf	N·m	kgf·cm	ft·lbf
4T	6	1	5	55	48 in.·lbf	6	60	52 in.·lbf
	8	1.25	12.5	130	9	14	145	10
	10	1.25	26	260	19	29	290	21
	12	1.25	47	480	35	53	540	39
	14	1.5	74	760	55	84	850	61
	16	1.5	115	1,150	83	–	–	–
5T	6	1	6.5	65	56 in.·lbf	7.5	75	65 in.·lbf
	8	1.25	15.5	160	12	17.5	175	13
	10	1.25	32	330	24	36	360	26
	12	1.25	59	600	43	65	670	48
	14	1.5	91	930	67	100	1,050	76
	16	1.5	140	1,400	101	–	–	–
6T	6	1	8	80	69 in.·lbf	9	90	78 in.·lbf
	8	1.25	19	195	14	21	210	15
	10	1.25	39	400	29	44	440	32
	12	1.25	71	730	53	80	810	59
	14	1.5	110	1,100	80	125	1,250	90
	16	1.5	170	1,750	127	–	–	–
7T	6	1	10.5	110	8	12	120	9
	8	1.25	25	260	19	28	290	21
	10	1.25	52	530	38	58	590	43
	12	1.25	95	970	70	105	1,050	76
	14	1.5	145	1,500	108	165	1,700	123
	16	1.5	230	2,300	166	–	–	–
8T	8	1.25	29	300	22	33	330	24
	10	1.25	61	620	45	68	690	50
	12	1.25	110	1,100	80	120	1,250	90
9T	8	1.25	34	340	25	37	380	27
	10	1.25	70	710	51	78	790	57
	12	1.25	125	1,300	94	140	1,450	105
10T	8	1.25	38	390	28	42	430	31
	10	1.25	78	800	58	88	890	64
	12	1.25	140	1,450	105	155	1,600	116
11T	8	1.25	42	430	31	47	480	35
	10	1.25	87	890	64	97	990	72
	12	1.25	155	1,600	116	175	1,800	130

VEHICLE LIFT AND SUPPORT LOCATIONS

IN007–01

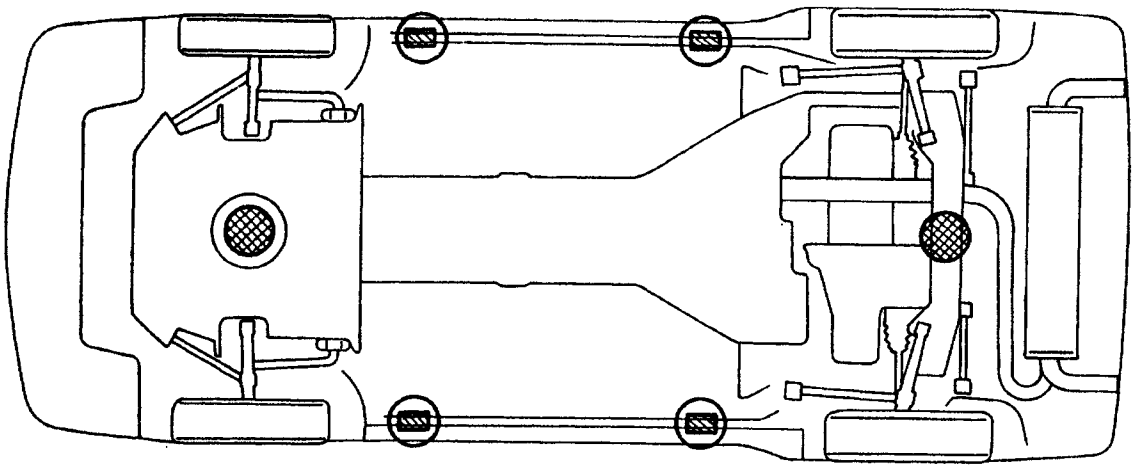

Front ⬅

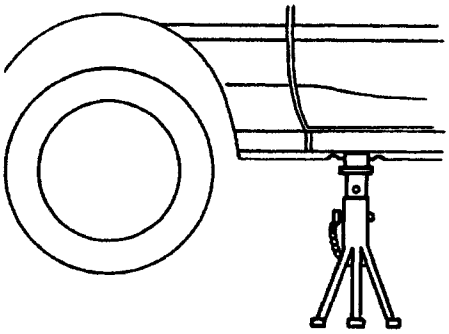

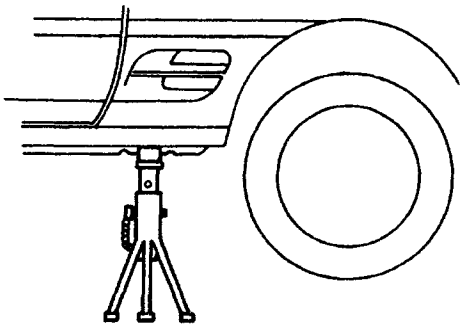

JACK POSITION ●

Front .... Jack up support of front under cover center
Rear ..... Rear suspension crossmember

PANTOGRAPH JACK POSITION ○

SUPPORT POSITION

Safety stand ▨

IN0299
IN0300

Z01861

GENERAL MAINTENANCE

M A00L-01

These are the maintenance and inspection items which are considered to be the owner's responsibility. They can be perfo–rmed by the owner or he can have them done at a service shop. These items in–clude those which should be checked on a daily basis, those which, in most cases, do not require (special) tools and those which are considered to be reasonable for the owner to perform. Items and procedures for general maintenance are as follows:

MA00N–02

OUTSIDE VEHICLE

1. TIRES

(a) Check the pressure with a gauge. Adjust if necessary.

(b) Check for cuts, damage or excessive wear.

2. WHEEL NUTS

When checking the tires, check the nuts for looseness or for missing nuts. If nec–essary, tighten them.

3. WINDSHIELD WIPER BLADES

Check for wear or cracks whenever they do not wipe clean. Replace if necessary.

4. FLUID LEAKS

(a) Check underneath for leaking fuel, oil, water or other fluid.

(b) If you smell gasoline fumes or notice any leak, have the cause found and corrected.

5. DOORS AND ENGINE HOOD

(a) Check that all doors including the trunk lid operate smoothly, and that all latches lock securely.

(b) Check that the engine hood secondary latch secures the hood from opening when the primary latch is released.

MA00Q–02

INSIDE VEHICLE

6. LIGHTS

(a) Check that the headlights, stop lights, tail–lights, turn signal lights, and other lights are all working.

(b) Check the headlight aim.

7. WARNING LIGHTS AND BUZZERS

Check that all warning lights and buzzers function properly.

8. HORN

Check that it is working.

9. WINDSHIELD GLASS

Check for scratches, pits or abrasions.

10. WINDSHIELD WIPER AND WASHER

(a) Check operation of the wipers and washer.

(b) Check that the wipers do not streak.

11. WINDSHIELD DEFROSTER

Check that the air comes out from the defroster outlet when operating the heater or air conditioner at defroster mode.

12. REAR VIEW MIRROR

Check that it is mounted securely.

13. SUN VISORS

Check that they more freely and mounted securely.

14. STEERING WHEEL

Check that it has the specified freeplay. Be alert for changes in steering condition, such as hard steering, excessive freeplay or strange noise.

15. SEATS

(a) Check that all seat controls such as seat adjusters, seat back recliner, etc. operate smoothly.

(b) Check that all latches lock securely in any position.

(c) Check that the locks hold securely in any latches position.

(d) Check that the head restraints move up and down smoothly and that the locks hold securely in any latched position.

16. SEAT BELTS

(a) Check that the seat belt system such as buckles, retractors and anchors operate properly and smoothly.

(b) Check that the belt webbing is not cut, frayed, worn or damaged.

17. ACCELERATOR PEDAL

Check the pedal for smooth operation and uneven pedal effort or catching.

18. CLUTCH PEDAL (See CL section)

Check the pedal for smooth operation.
Check that the pedal has the proper fre–eplay.

19. BRAKE PEDAL (See BR section)

(a) Check the pedal for smooth operation.

(b) Check that the pedal has the proper re–serve distance and freeplay.

(c) Check the brake booster function.

20. BRAKES

At a safe place, check that the brakes do not pull to one side when applied.

21. PARKING BRAKE (See BR section)

(a) Check that the lever has the proper travel.

(b) On a safe incline, check that the vehicle is help securely with only the parking brake applied.

MA008–02

UNDER HOOD

22. WINDSHIELD WASHER FLUID

Check that there is sufficient fluid in the tank.

23. ENGINE COOLANT LEVEL

Check that the coolant level is between the ”FULL” and ”LOW” lines on the see–through reservoir.

24. RADIATOR AND HOSES

(a) Check that the front of the radiator is clean and not blocked with leaves, dirt or bugs.

(b) Check that hoses for cracks, kinks, rot or loose connections.

25. BATTERY ELECTROLYTE LEVEL

Check that the electrolyte level of all bat–tery cells is between the upper and lower level lines on the case. If level low, add distilled water only.

26. BRAKE AND CLUTCH FLUID LEVELS

(a) Check that the brake fluid level is near the upper level line on the see–through res–ervoir.

(b) Check that the clutch fluid level is within ±5 mm (0.20 in.) of the reservoir hem.

27. ENGINE DRIVE BELTS

Check all drive belts for fraying, cracks, wear or oiliness.

28. ENGINE OIL LEVEL

Check the level on the dipstick with the engine turned off.

29. POWER STEERING FLUID LEVEL

Check the level.

The level should be in the ”HOT” or ”COLD” range depending on the fluid temperature.

30. EXHAUST SYSTEM

Visually inspect for cracks, holes or loose supports.

If any change in the sound of the exhaust or smell of the exhaust fumes is noticed, have the cause located and corrected.

MAINTENANCE OPERATIONS

MA01D–01

ENGINE

Cold Engine Operations

1. REPLACE TIMING BELT

(See Engine Mechanical in EG section)

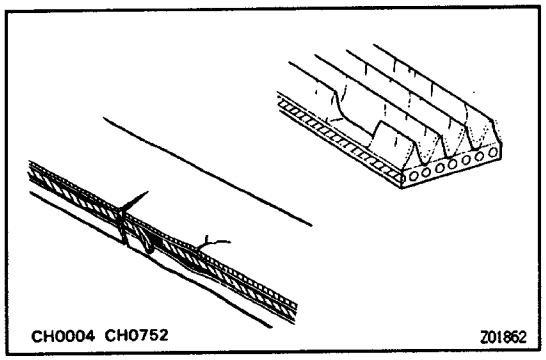

2. INSPECT DRIVE BELTS

(a) Visually check the belt for excessive wear, frayed cords etc.

If necessary, replace the drive belt.

HINT: Cranks on the rib side of a belt are considered acceptable. If the belt has chunks missing from the ribs, it should be replaced.

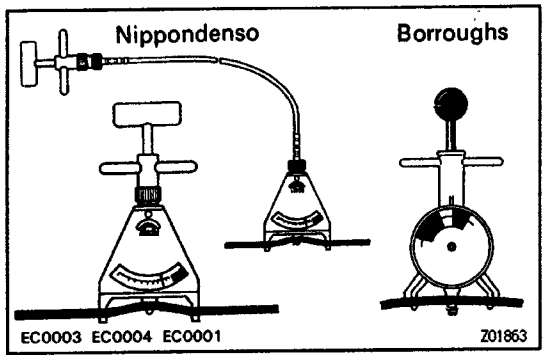

(b) Using a belt tension gauge, measure the belt tension.

Belt tension gauge:

Nippondenso BTG–20 (95506–00020)

Borroughs No. BT–33–73F

Drive belt tension:

Alternator

New belt

120 ± 20 lbf

Used belt

104 ± 20 lbf

A/C compressor

New belt

160 ± 25 lbf

Used belt

100 ± 20 lbf

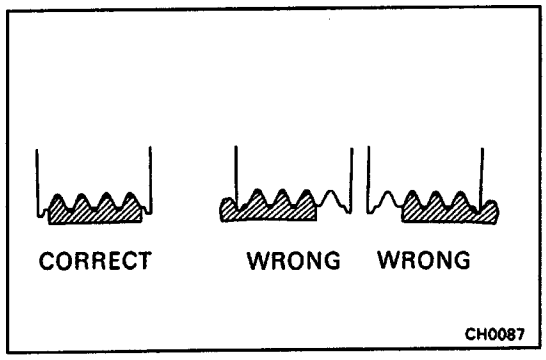

If necessary, adjust the belt tension.

HINT:

- “New belt” refers to a belt which has been used less than 5 minutes on a running engine.
- “Used belt” refers to a belt which has been used on a running engine for 5 minutes or more.
- After installing the belt, check that it fits properly in the ribbed grooves.
- Check by hand to confirm that the belt has not slipped out of the groove on the bottom of the pulley.
- After installing a new belt, run the engine for about 5 minutes and recheck the belt tension.

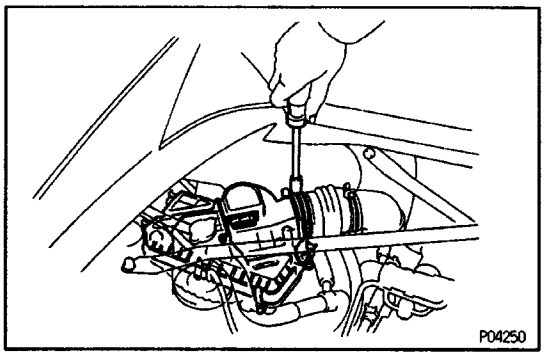

3. INSPECT AIR FILTER

(a) Remove the air cleaner cap and air filter.

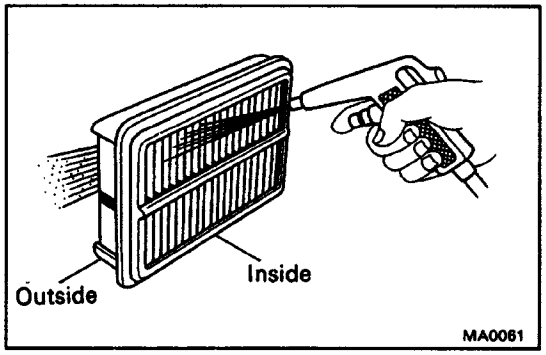

(b) Visually check that the air filter is not excessively damaged or only.
If necessary, replace the air filter.

(c) Clean the air filter with compressed air.
First blow from the inside thoroughly, then blow off the outside of the air filter.

(d) Reinstall the air filter and cleaner cap.

4. REPLACE AIR FILTER

Replace the air filter with a new one.

5. REPLACE SPARK PLUGS

(a) Disconnect the No.1 intake air connector from the throttle body.

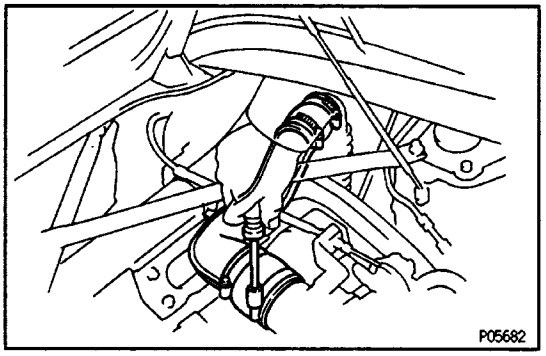

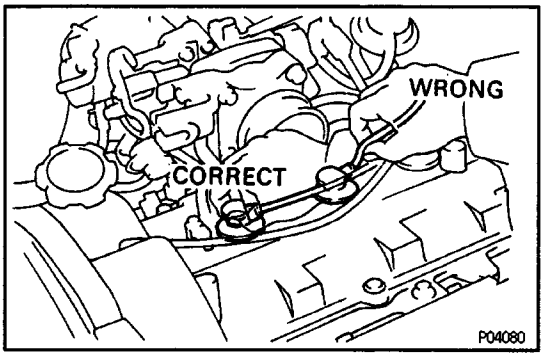

(b) Disconnect the high – tension cords at the rubber boot. Do not pull on the cords.

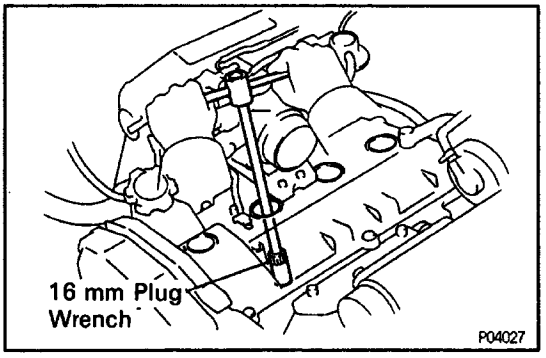

(c) Using a 16 mm plug wrench, remove the spark plugs.

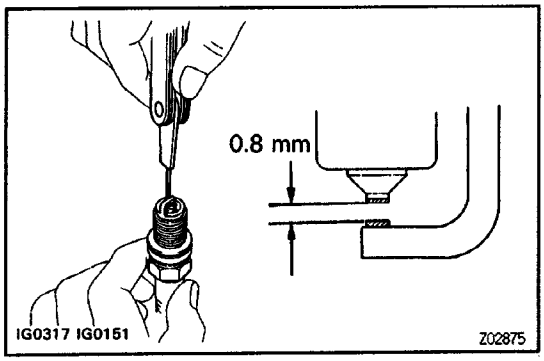

(d) Check the electrode gap of new spark plugs.

Correct electrode gap:

0.8 mm (0.0031 in.)

Recommended spark plugs:

PK20R8 for ND

BKR6EP8 for NGK

NOTICE: If adjusting the gap of a new plug, bend only the base of the ground electrode. Do not touch the tip. Never attempt to adjust the gap on a used plug.

(e) Using a 16 mm plug wrench, reinstall the spark plugs.

Torque: 18 N–m (180 kgf–cm, 13 ft–lbf)

(f) Reconnect the high–tension cords.

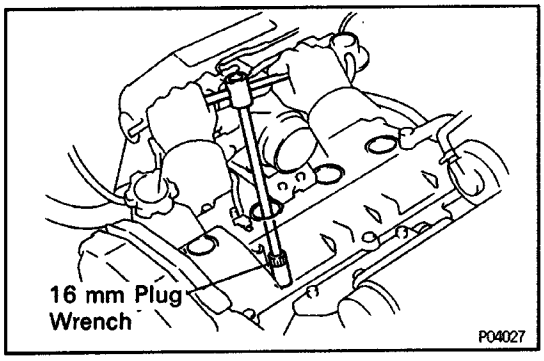

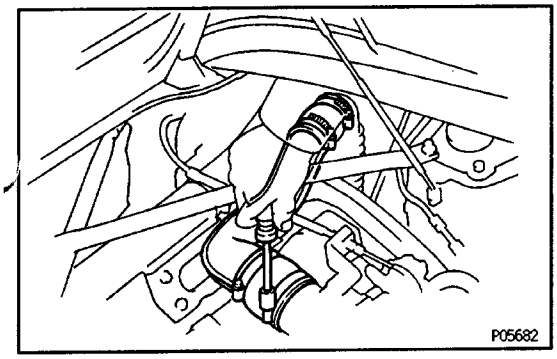

(g) Reconnect the No.1 intake air connector to the thr–ottle body.

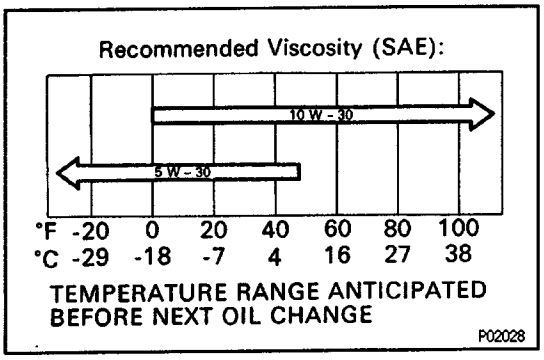

6. REPLACE ENGINE OIL AND OIL FILTER

(See Lubrication System in EG section)

Oil grade:

API grade SG Energy – Conserving II multigrade engine oil. Recommended viscosity is as shown.

Drain and refill capacity:

w/ Oil filter change

3.9 liters (4.1 US qts, 3.4 Imp. qts)

w/o Oil filter change

3.6 liters (3.8 US qts, 3.2 Imp. qts)

7. REPLACE ENGINE COOLANT

(See Cooling System in EG section)

HINT:

- Use a good brand of ethylene–glycol base coo–lant and mix it according to the manufacturer's instructions.
- Using coolant which includes more than 50% ethylene – glycol (but not more than 70%) is recommended.

NOTICE:

- **Do not use alcohol type coolant.**
- **The coolant should be mixed with demineralized water or distilled water.**

Coolant capacity (w/ Heater):

13.e liters (14.4 US qts. 12.0 Imp. qts)

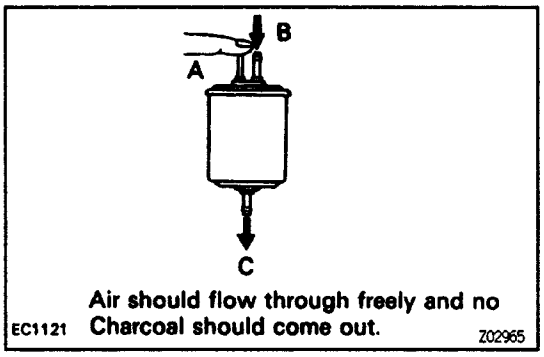

8. INSPECT CHARCOAL CANISTER

(a) Disconnect the hoses from the charcoal canister. Label hoses for correct installation.

(b) Plug port A with your finger, and blow compressed air (294 kPa (3 kgf/cm_2, 43 psi)) through port B (fuel tank side).

- Check that the air comes out of the bottom of port C without resistance.
- Check that no activated charcoal comes out.

If necessary, replace the charcoal canister.

NOTICE: Do not attempt to wash the charcoal.

(c) Reconnect the hoses to the charcoal canister.

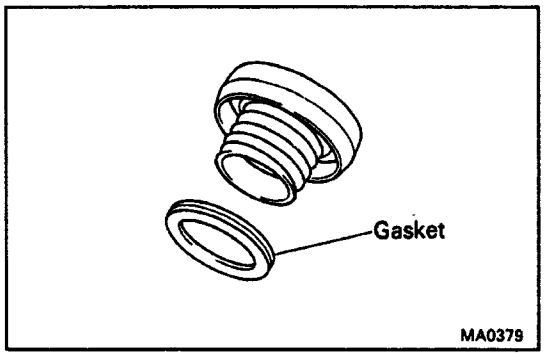

9. REPLACE GASKET IN FUEL TANK CAP

(a) Remove the old gasket from the tank cap.

NOTICE: Do not damage the tank cap.

(b) Install a new gasket by hand.

(c) Check the cap for damage or cracks.

(d) Reinstall the cap and check the torque limiter.

10. INSPECT FUEL LINES AND CONNECTIONS

Visually check the fuel lines for cracks, leakage, loose connections, deformation or tank band looseness.

11. INSPECT EXHAUST PIPES AND MOUNTINGS

Visually check the pipes, hangers and connections for severe corrosion, leaks or damage.

12. ADJUST VALVE CLEARANCE

(See Tune–Up in EG section)

Valve clearance (Cold):

Intake

0.15 – 0.25 mm (0.006 – 0.010 in.)

Exhaust

0.28 – 0.38 mm (0.011 – 0.015 in.)

MA01E–01

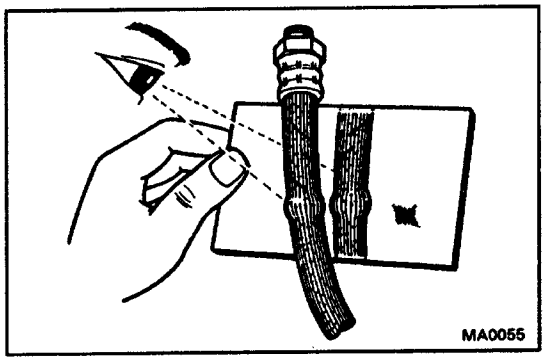

BRAKES

13. INSPECT BRAKE LINE PIPES AND HOSES

HINT: Check in a well lighted area. Check the entire circumference and length of the brake hoses using a mirror as required. Turn the front wheels fully right or left before checking the front brake.

(a) Check all brake lines and hoses for:

- Damage
- Wear
- Deformation
- Cracks
- Corrosion
- Leaks
- Bends
- Twists

(b) Check all clamps for tightness and connections for leakage.

(c) Check that the hoses and lines are clear of sharp edges, moving parts and the exhaust system.

(d) Check that the lines installed in grommets pass thr–ough the center of the grommets.

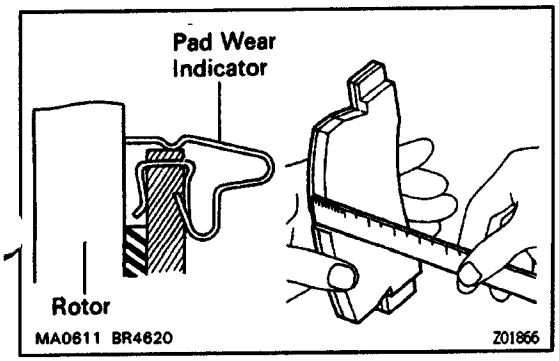

14. INSPECT BRAKE PADS AND DISCS (See BR section)

(a) Check the thickness of the disc brake pads and check for irregular wear.

Minimum pad thickness:

1.0 mm (0.039 in.)

HINT: If a squealing or scraping noise comes from the brake during driving, check the pad wear indicator to see if it is contacting the disc rotor. If so, the disc pad should be replaced.

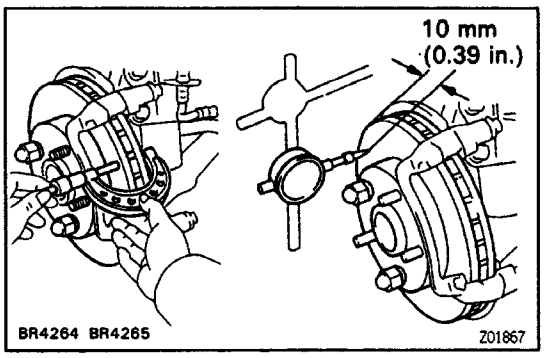

(b) Check the disc for wear or runout.

Minimum disc thickness:
Front
28.0 mm (1.102 in.)
Rear
21.0 mm (0.827 in.)
Maximum disc runout:
Front
0.07 mm (0.0028 in.)
Rear
0.10 mm (0.0039 in.)

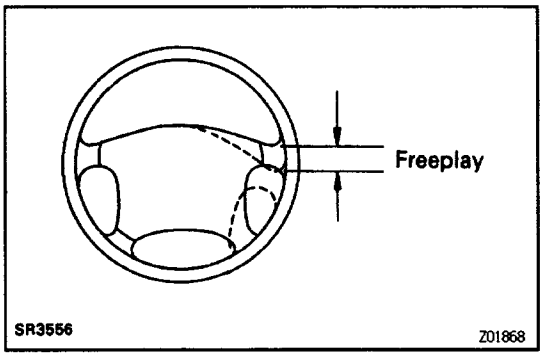

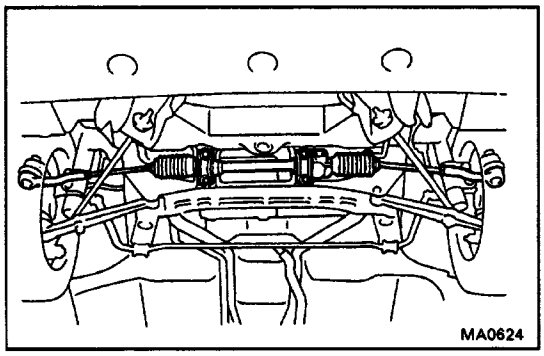

MA01F–01

CHASSIS

15. INSPECT STEERING LINKAGE

(a) Check the steering wheel freeplay.

Maximum steering wheel freeplay:
30 mm (1.18 in.)

With the vehicle stopped and pointed straight ahead, rock the steering wheel gently back and forth with light finger pressure.

(b) Check the steering linkage for looseness or damage.

Check that:

- Tie rod ends do not have excessive play.
- Dust seals and boots are not damaged.
- Boot clamps are not loose.

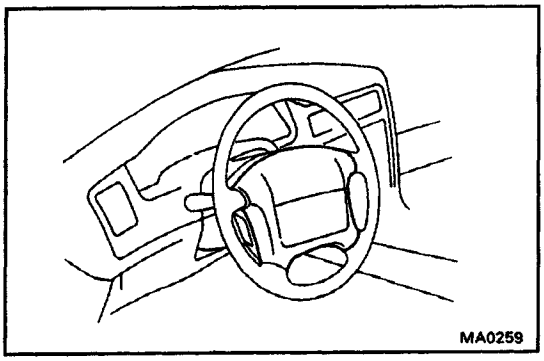

16. INSPECT SRS AIRBAG

Visually inspect the steering wheel pad (airbag and inflater).

- Use the diagnosis check to check if there are abnormalities.
- Check that there are no cuts, cracks or noticeable color changes on the surface of the steering wheel pad or in the center groove of the pad.
- Remove the steering wheel pad from the vehicle and check the wiring and steering wheel for damage and corrosion due to rusting, etc..
  If necessary, replace the steering wheel pad.

CAUTION:

- For removal and replacement of the steering wheel pad, see page SR section and be sure to perform the operation in the correct order.
- Before disposing of the steering wheel pad, the airbag must first be deployed by using SST (See AB section).

17. INSPECT STEERING GEAR HOUSING OIL

Check the steering gear housing for oil leakage.

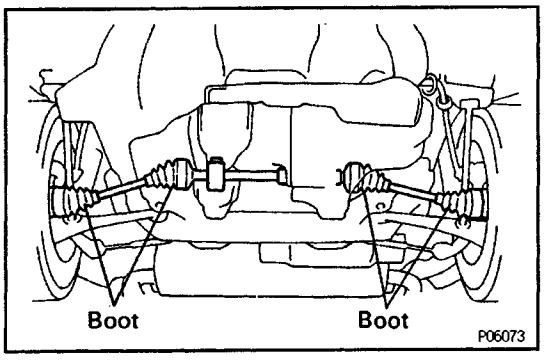

18. INSPECT DRIVE SHAFT BOOTS

Check the drive shaft boots for clamp looseness, leakage or damage.

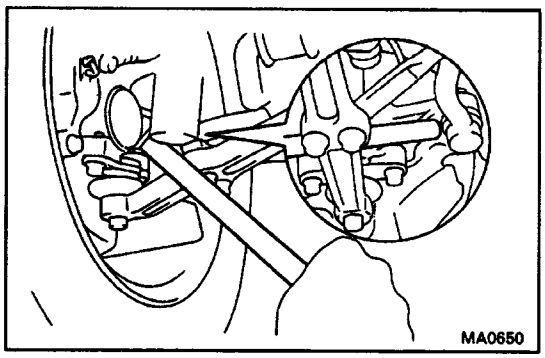

19. INSPECT BALL JOINTS AND DUST COVERS

(a) Inspect the ball joints for excessive looseness.

- Jack up the front of the vehicle and place wooden blocks with a height of 180 – 200 mm (7.09 – 7.87 in.) under the front tires.
- Lower the jack until there is about half a load on the front coil spring. Place stands under the ve–hicle for safety.
- Check that the front wheels are in a straight forward position, and block them with shocks.
- Using a lever, pry up the end of the lower arm, and check the amount of play.

Maximum ball joint vertical play:

0 mm (0 in.)

If there is play, replace the ball joint.

(b) Check the dust cover for damage.

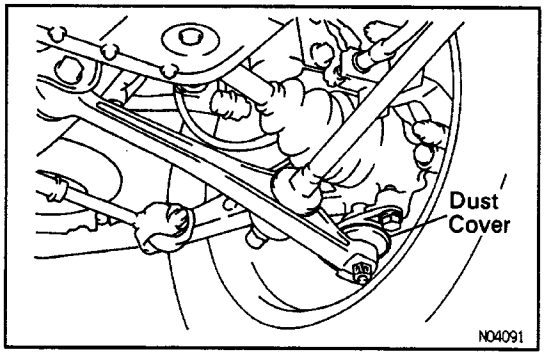

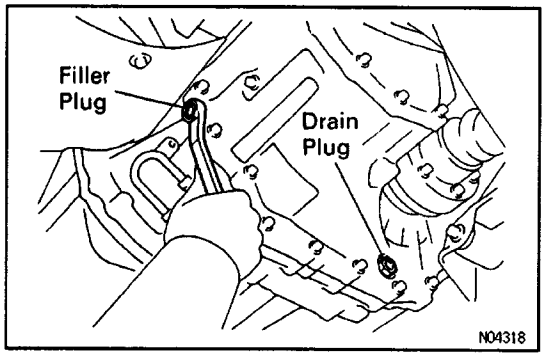

20. CHECK TRANSAXLE OIL

Visually check the transaxle for oil leakage.

If leakage is found, check for the cause and repair.

21. REPLACE TRANSAXLE OIL (INCL. DIFFERENTIAL OIL)

(a) Remove the filler and drain plugs, and drain the oil.

(b) Reinstall the drain plug securely.

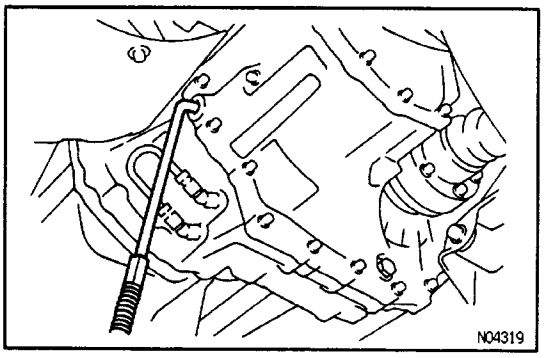

(c) Add new oil until it begins to run out of the filler hole.

Recommended oil

Oil grade:

API GL–3, GL–4 or GL–5

Viscosity:

SAE 75W – 90 or 80W – 90

Above –18˚ C (0˚ F) SAE 90

Below –18˚ C (0˚ F) SAE 80W

Standard Type

Capacity: 4.2 liters (4.4 US qts, 3.7 Imp.qts)

Viscous Coupling LSD Type

Capacity: 3.9 Liters (4.1 US qts, 3.4 Imp. qts)

(d) Reinstall the filler plug securely.

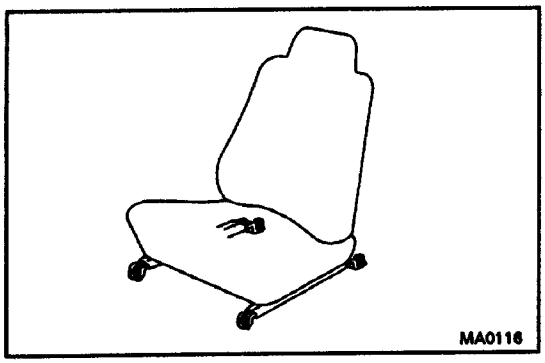

22. TIGHTEN BOLTS AND NUTS ON CHASSIS AND BODY

Tighten the following parts:

- Seat mount bolts

  Torque: 37 N–m (375 kgf–cm, 27 ft–lbf)

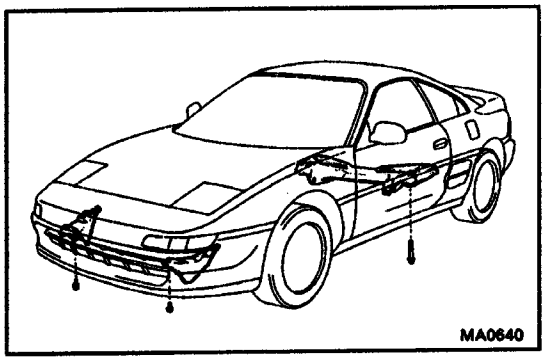

Strut bar bracket–to–body mounting bolts

Torque: 80 N–m (820 kgf–cm, 59 ft–lbf)

Rear suspension lower crossrnember–to – body mounting bolts

Torque: 113 N–m (1,150. kgf–cm, 83 ft–lbf)

23. FINAL INSPECTION

(a) Check the operation of the body parts:

- **Hood**
- **Auxiliary catch operates properly**
- **Hood locks securely when closed**
- **Doors**
- **Door lock operates properly**
- **Doors close properly**
- **Luggage compartment door**
- **Door lock operates properly**
- **Seats**

Seat adjusts easily and locks securely in any position

Seat back locks securely in any position

Folding–down rear seat backs lock securely

(b) Road test

- **Check the engine and chassis for abnormal noises.**
- **Check that the vehicle does not wander or pull to one side.**
- **Check that the brakes work properly and do not drag.**

(c) Be sure to deliver a clean car and especially check:

- **Steering wheel**
- **Shift lever knob**
- **All switch knobs**
- **Door handles**
- **Seats**

MAINTENANCE

(3S–GTE)

MAINTENANCE SCHEDULE

SCHEDULE A

Maintenance operations: A = Check and adjust if necessary;
R = Replace, change or lubricate;
I = Inspect and correct or replace if necessary

CONDITIONS:

- Towing a trailer, using a camper or car top carrier.
- Repeated short trips less than 8 km (5 miles) and outside temperature remains below freezing.
- Extensive idling and/or low speed driving for long distances such as police, taxi or door-to-door delivery use.
- Operating on dusty, rough muddy or salt spread roads.

System	Service interval (Odometer reading or months, whichever comes first) / Maintenance items	Maintenance services beyond 96,000 km (60,000 miles) should continue to be performed at the same intervals shown for each maintenance schedule.																	See page (item No.)
	km x 1,000	6	12	18	24	30	36	42	48	54	60	66	72	78	84	90	96	Months	
	Miles x 1,000	3.75	7.5	11.25	15	18.75	22.5	26.25	30	33.75	37.5	41.25	45	48.75	52.5	56.25	60		
ENGINE	Timing belt(1)																R	–	MA–5 (item 1)
	Valve clearance																A	A: Every 72 months	MA–9 (item 12)
	Drive belts	I: First period, 96,000 km (60,000 miles) or 72 months. I: After that every 12,000 km (7,500 miles) or 12 months																	MA–5 (item 2)
	Engine oil*	R: Every 4,000 km (2,500 miles) or 3 months																	MA–7 (item 6)
	Engine oil filter*	R: Every 8,000 km (5,000 miles) or 6 months																	MA–7 (item 6)
	Engine coolant	R: First period, 72,000 km (45,000 miles) or 36 months. R: After that every 48,000 (30,000 miles) or 24 months																	MA–7 (item 7)
	Exhaust pipes and mountings				I				I				I				I	I: Every 24 months	MA–8 (item 11)
FUEL	Air filter(2)*	I: Every 8,000 km (5,000 miles) or 6 months R: Every 48,000 km (30,000 miles) or 36 months																	MA–6 (item 3, 4)
	Fuel lines and connections(3)								I								I	I: Every 36 months	MA–8 (item 10)
	Fuel tank cap gasket																R	R: Every 72 months	MA–8 (item 9)
IGNITION	Spark plugs (Platinum tipped type)																R	R: Every 72 months	MA–6 (item 5)
EVAP	Charcoal canister																I	I: Every 72 months	MA–8 (item 8)
BRAKES	Brake pads and discs (Front and rear)		I		I		I		I		I		I		I		I	I: Every 12 months	MA–9 (item 14)
	Brake line pipes and hoses				I				I				I				I	I: Every 24 months	MA–9 (item 13)
CHASSIS	Steering linkage		I		I		I		I		I		I		I		I	I: Every 12 months	MA–10 (item 15)
	SRS airbag	I: First period, 10 years. I: After that every 2 years.																	MA–11 (item 16)
	Drive shaft boots		I		I		I		I		I		I		I		I	I: Every 12 months	MA–11 (item 18)
	Ball joints and dust covers		I		I		I		I		I		I		I		I	I: Every 12 months	MA–12 (item 19)
	Transaxle and differential				R				R				R				R	R: Every 24 months	MA–12 (item 21)
	Steering gear housing oil(4)				I				I				I				I	I: Every 24 months	MA–11 (item 17)
	Bolts and nuts on chassis and body(5)		I		I		I		I		I		I				I	I: Every 12 months	MA–13 (item 22)

Mark indicates maintenance which is part of the warranty conditions for the Emission Control System. The warranty period is in accordance with the owner's guide or the warranty booklet. (: California specification vehicles)

(1) Applicable to vehicles operated under conditions of extensive idling and/or low speed driving for a long distance such as police, taxi or door-to-door delivery use.

(2) Applicable when operating mainly on dusty road. If not, apply SCHEDULE B.

(3) Includes inspection of fuel tank band and vapor vent system.

(4) Check for oil leaks from steering gear housing.

(5) Applicable only when operating mainly on rough, muddy roads. The applicable parts are listed below. For other usage conditions, refer to SCHEDULE B.

- Front and rear suspension member to cross body
- Strut bar bracket to body bolts
- Bolts for sheet installation

SCHEDULE B

CONDITIONS: Conditions other than those listed for SCHEDULE A.

System	Service interval (Odometer reading or months, whichever comes first) / Maintenance items	Maintenance service beyond 96,000 km (60,000 miles) should continue to be performed at the same intervals shown for each maintenance schedule.									See page (item No.)
		km x 1,000	12	24	36	48	60	72	84	96	Months	
		Miles x 1,000	7.5	15	22.5	30	37.5	45	52.5	60		
ENGINE	Valve clearance									A	A: Every 72 months	MA–9 (item 12)
	Drive belts		I: First period, 96,000 km (60,000 miles) or 72 months. I: After that every 12,000 km (7,500 miles) or 12 months									MA–5 (item 2)
	Engine oil*		R: Every 8,000 km (5,000 miles) or 6 months									MA–7 (item 6)
	Engine oil filter*		R: Every 16,000 km (10,000 miles) or 12 months									MA–7 (item 6)
	Engine coolant		R: First period, 72,000 km (45,000 miles) or 36 months. R: After that every 48,000 (30,000 miles) or 24 months									MA–7 (item 7)
	Exhaust pipes and mountings					I				I	I: Every 36 months	MA–8 (item 11)
FUEL	Air filter*					R				R	R: Every 36 months	MA–6 (item 4)
	Fuel lines and connections(1)					I				I	I: Every 36 months	MA–8 (item 10)
	Fuel tank cap gasket									R	R: Every 72 months	MA–8 (item 9)
IGNITION	Spark plugs (Platinum tipped type)									R	R: Every 72 months	MA–6 (item 5)
EVAP	Charcoal canister									I	I: Every 72 months	MA–8 (item 8)
BRAKES	Brake pads and discs (Front and rear)			I		I		I		I	I: Every 24 months	MA–9 (item 14)
	Brake line pipes and hoses			I		I		I		I	I: Every 24 months	MA–9 (item 13)
CHASSIS	Steering linkage			I		I		I		I	I: Every 24 months	MA–10 (item 15)
	SRS airbag		I: First period, 10 years. I: After that every 2 years.									MA–11 (item 16)
	Drive shaft boots			I		I		I		I	I: Every 24 months	MA–11 (item 18)
	Ball joints and dust covers			I		I		I		I	I: Every 24 months	MA–12 (item 19)
	Transaxle and differential(2)			I		I		I		I	I: Every 24 months	MA–12 (item 20)
	Steering gear housing oil(3)			I		I		I		I	I: Every 24 months	MA–11 (item 17)
	Bolts and nuts on chassis and body(4)			I		I		I		I	I: Every 24 months	MA–13 (item 22)

Mark indicates maintenance which is part of the warranty conditions for the Emission Control System. The warranty period is in accordance with the owner's guide or the warranty booklet. (: California specification vehicles)

(1) Includes inspection of fuel tank band and vapor vent system.

(2) Check for leakage.

(3) Check for oil leaks from steering gear housing.

(4) The applicable parts are listed below.

- Front and rear suspension member to cross body
- Strut bar bracket to body bolt
- Bolts for sheet installation

PREPARATION

EQUIPMENT

MA008–01

Belt tension gauge	
Dial indicator or dial indicator with magnetic base	
Micrometer	
Mirror	Brake hose
Steel square	
Tachometer	
Torque wrench	
Vernier calipers	

COOLANT

MA00A–02

Item	Capacity	Classification
Engine coolant (w/ Heater)	13.6 liters (14.4 US qts, 12.0 Imp. qts)	Ethylene–glycol base

LUBRICANT

MA00C–02

Item	Capacity	Classification
Engine oil Drain and refill w/ Oil filter change w/o Oil filter change	 3.9 liters (4.1 US qts, 3.4 Imp. qts) 3.6 liters (3.8 US qts,3.2 Imp. qts)	 API grade SG Energy–Conserving n multigrade and recommended viscosity oil
Standard Type Manual transaxle oil (w/ Differential oil)	4.2 liters (4.4 US qts, 3.7 Imp. qts)	API GL–3, GL–4 or GL–5 SAE 75W–90 or 80W–90
Viscous Coupling LSD Type Manual transaxle oil (w/ Differential oil)	3.9 liters (4.1 US qts, 3.4 Imp. qts)	API GL–3, GL–4 or GL–5 SAE 75W –90 or 80W –90

SERVICE SPECIFICATIONS

SERVICE DATA

MA01C–01

Drive belt tension		
Alternator	New belt	120 ± 20 lbf
Alternator	Used belt	104 ± 20 lbf
A/C compressor	New belt	160 ± 25 lbf
A/C compressor	Used belt	100 ± 20 lbf
Spark plug Recommended spark plug	ND	PK20R8
Spark plug Recommended spark plug	NGK	BKR6EP8
Spark plug Correct electrode gap		0.8 mm (0.0031 in.)
Firing order		1 – 3 – 4 – 2
Valve clearance	Intake	0.15 – 0.25 mm (0.006 – 0.010 in.)
Valve clearance	Exhaust	0.28 – 0.38 mm (0.011 – 0.015 in.)
Front and rear brake		
Pad thickness	Minimum	1.0 mm (0.039 in.)
Disc thickness Front	Minimum	28.0 mm (1.102 in.)
Disc thickness Rear	Minimum	21.0 mm (0.827 in.)
Disc runout Front	Maximum	0.07 mm (0.0028 in.)
Disc runout Rear	Maximum	0.10 mm (0.0039 in.)
Front axle and suspension		
Ball joint vertical play	Maximum	0 mm (0 in.)
Steering wheel freeplay	Maximum	30 mm (1.18 in.)

TORQUE SPECIFICATIONS

MA00U–02

Pert tightened	N–m	kgf–cm	ft–lbf
Seat mounting bolts	37	375	27
Strut bar bracket–to–body mounting bolts	80	820	59
Rear suspension lower crossmember–to–body mounting bolts	113	1,150	83

GENERAL MAINTENANCE

woa–o

These are the maintenance and inspection items which are considered to be the owner's responsibility. They can be perfo–rmed by the owner or he can have them done at a service shop. These items in–clude those which should be checked on a daily basis, those which, in most cases, do not require (special) tools and those which are considered to be reasonable for the owner to perform. Items and procedures for general maintenance are as follows:

OUTSIDE VEHICLE

MA00M–08

1. TIRES

(a) Check the pressure with a gauge. Adjust if necessary.

(b) Check for cuts, damage or excessive wear.

2. WHEEL NUTS

When checking the tires, check the nuts for looseness or for missing nuts. If nec–essary, tighten them.

3. WINDSHIELD WIPER BLADES

Check for wear or cracks whenever they do not wipe clean. Replace if necessary.

4. FLUID LEAKS

(a) Check underneath for leaking fuel, oil, water or other fluid.

(b) If you smell gasoline fumes or notice any leak, have the cause found and corrected.

5. DOORS AND ENGINE HOOD

(a) Check that all doors including the trunk lid operate smoothly, and that all latches lock securely.

(b) Check that the engine hood secondary latch secures the hood from opening when the primary latch is released.

INSIDE VEHICLE

MA00Q–08

6. LIGHTS

(a) Check that the headlights, stop lights, tail–lights, turn signal lights, and other lights are all working.

(b) Check the headlight aim.

7. WARNING LIGHTS AND BUZZERS

Check that all warning lights and buzzers function properly.

8. HORN

Check that it is working.

9. WINDSHIELD GLASS

Check for scratches, pits or abrasions.

10. WINDSHIELD WIPER AND WASHER

(a) Check operation of the wipers and washer.

(b) Check that the wipers do not' streak.

11. WINDSHIELD DEFROSTER

Check that the air comes out from the¿defroster outlet when operating the heater or air conditioner at defroster mode.

12. REAR VIEW MIRROR

Check that it is mounted securely.

13. SUN VISORS

Check that they more freely and mounted securely.

14. STEERING WHEEL

Check that it has the specified freeplay. Be alert for changes in steering condition, such as hard steering, excessive freeplay or strange noise.

15. SEATS

(a) Check that all seat controls such as seat adjusters, seatback recliner, etc. operate smoothly.

(b) Check that all latches lock securely in any position.

(c) Check that the locks hold securely in any latches position.

(d) Check that the head restraints move up and down smoothly and that the locks hold securely in any latched position.

16. SEAT BELTS

(a) Check that the seat belt system such as buckles, retractors and anchors operate properly and smoothly.

(b) Check that the belt webbing is not cut, frayed, worn or damaged.

17. ACCELERATOR PEDAL

Check the pedal for smooth operation and uneven pedal effort or catching.

18. CLUTCH PEDAL (See CL section)

Check the pedal for smooth operation.
Check that the pedal has the proper fre–eplay.

19. BRAKE PEDAL (See BR section)

(a) Check the pedal for smooth operation.

(b) Check that the pedal has the proper re–serve distance and freeplay.

(c) Check the brake booster function.

20. BRAKES

A safe place, check that the brakes do not pull to one side when applied.

21. PARKING BRAKE (See BR section)

(a) Check that the lever has the proper travel.

(b) On a safe incline, check that the vehicle is help securely with only the parking brake applied.

22. AUTOMATIC TRANSMISSION PARK MECHANISM

(a) Check that lock release button of the se–lector lever for proper and smooth opera–tion.

(b) On a safe incline, check that the vehicle is help securely with the selector lever in the ”P” position and all brakes released.

UNDER HOOD

MA00S–03

23. WINDSHIELD WASHER FLUID

Check that there is sufficient fluid in the tank.

24. ENGINE COOLANT LEVEL

Check that the coolant level is between the ”FULL” and ”LOW” lines on the see–through reservoir.

25. RADIATOR AND HOSES

(a) Check that the front of the radiator is clean and not blocked with leaves, dirt or bugs.

(b) Check that hoses for cracks, kinks, rot or loose connections.

26. BATTERY ELECTROLYTE LEVEL

Check that the electrolyte level of all bat–tery cells is between the upper and lower level lines on the case. If level low, add distilled water only.

27. BRAKE AND CLUTCH FLUID LEVELS

(a) Check that the brake fluid level is near the upper level line on the see–through res–ervoir.

(b) Check that the clutch fluid level is within ± 5 mm (0.20 in.) of the reservoir hem.

28. ENGINE DRIVE BELTS

Check all drive belts for fraying, cracks, wear or oiliness.

29. ENGINE OIL LEVEL

Check the level on the dipstick with the engine turned off.

30. POWER STEERING FLUID LEVEL

Check the level.

The level should be in the ”HOT” or ”COLD” range depending on the fluid temperature.

31. AUTOMATIC TRANSMISSION FLUID LEVEL

(a) Park the vehicle on a level surface.

(b) With the engine idling and the parking brake applied, shift the selector into all positions from ”P” to ”L” and then shift into ”P”

(c) Pull out the dipstick and wipe off the fluid with a clean rag.
Re – insert the dipstick and check that the fluid level is in the HOT range.

(d) Perform this check with the fluid at normal driving temperature (70 – 80˚C (158 – 176˚F)).

HINT: Wait about 30 minutes before che–cking the fluid level after extended driving at high speeds in hot weather, driving in heavy traffic or with a trailer.

32. EXHAUST SYSTEM

Visually inspect for cracks, holes or loose supports.

If any change in the sound of the exhaust or smell of the exhaust fumes is noticed, have the cause located and corrected.

MAINTENANCE OPERATIONS

MA00E–02

ENGINE

Cold Engine Operations

1. REPLACE TIMING BELT

(See Engine Mechanical in EG section)

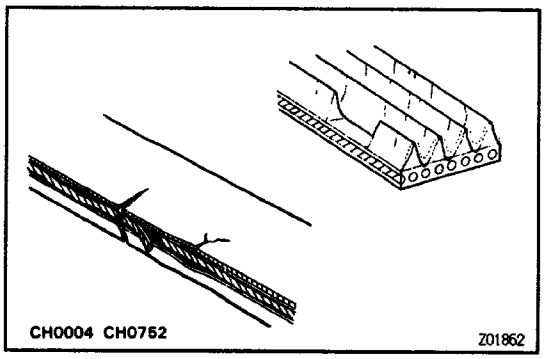

2. INSPECT DRIVE BELTS

(a) Visually check the belt for excessive wear, frayed cords etc.

If necessary, replace the drive belt.

HINT: Cranks on the rib side of a belt are considered acceptable. If the belt has chunks missing from the ribs, it should be replaced.

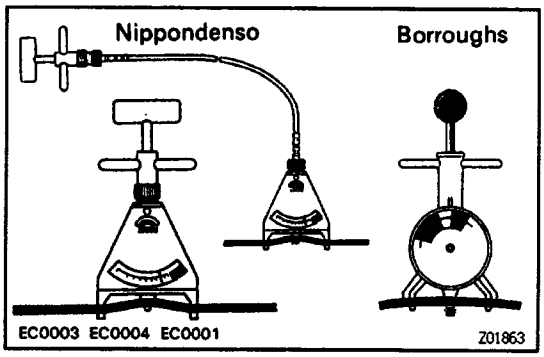

(b) Using a belt tension gauge, measure the belt tension.

Belt tension gauge:

Nippondenso BTG–20 (95506–00020)

Borroughs No. BT–33–73F

Drive belt tension:

Alternator

New belt

120 ± 20 lbf

Used belt

104 ± 20 lbf

A/C compressor

New belt

160 ± 25 lbf

Used belt

100 ± 20 lbf

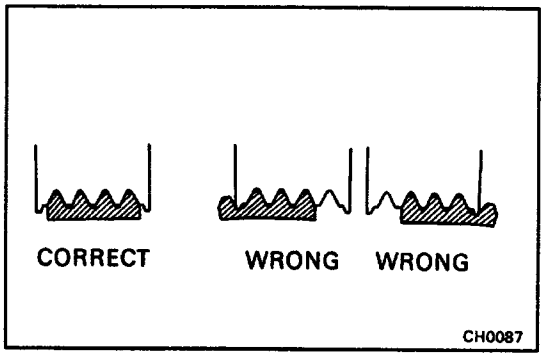

If necessary, adjust the belt tension.

HINT:

- ”New belt” refers to a belt which has been used less than 5 minutes on a running engine.
- ”Used belt” refers to a belt which has been used on a running engine for 5 minutes or more.
- After installing the belt, check that it fits properly in the ribbed grooves.
- Check by hand to confirm that the belt has not slipped out of the groove on the bottom of the pulley.
- After installing a new belt, run the engine for about 5 minutes and recheck the belt tension.

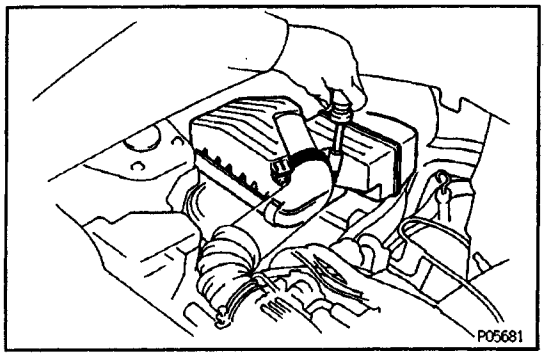

3. INSPECT AIR FILTER

(a) Remove the air cleaner cap and air filter.

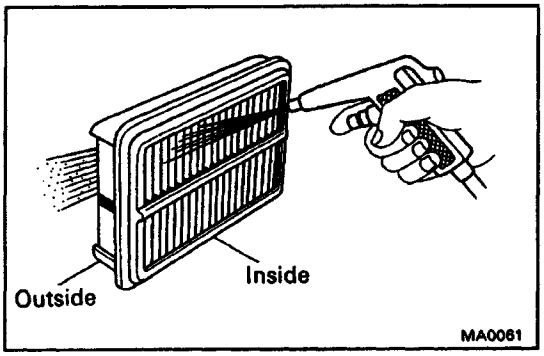

(b) Visually check that the air filter is not excessively damaged only.

If necessary, replace the air filter.

(c) Clean the air filter with compressed air.

First blow from the inside thoroughly, then blow off the outside of the air filter.

(d) Reinstall the air filter and cap.

4. REPLACE AIR FILTER

Replace the air filter with a new one.

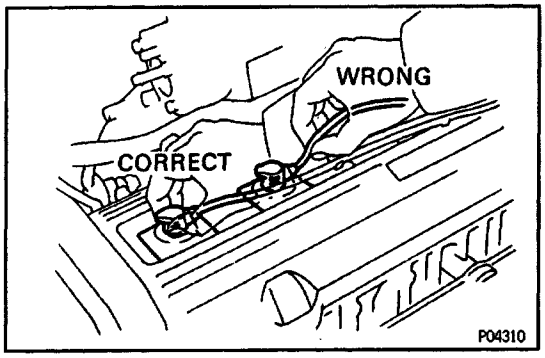

5. REPLACE SPARK PLUGS

(a) Disconnect the high–tension cords at the rubber boot. Do not pull on the cords.

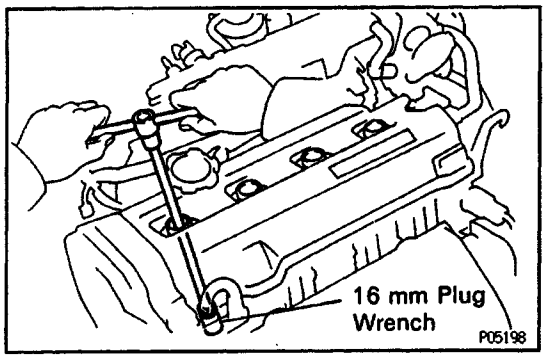

(b) Using a 16 mm plug wrench, remove the spark plugs.

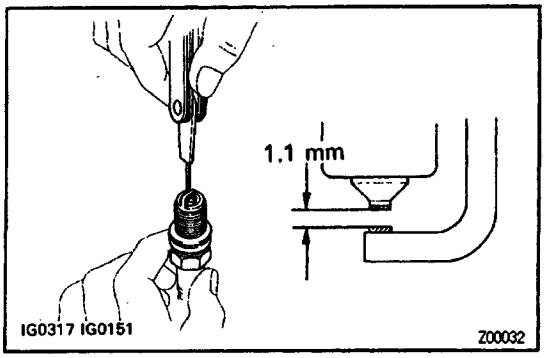

(c) Check the electrode gap of new spark plugs.

Correct electrode gap:

1.1 mm (0.0043 in.)

Recommended spark plugs:

PK20R11 for ND

BKR6EP–11 for NGK

NOTICE: If adjusting the gap of a new plug, bend only the base of the ground electrode. Do not touch the tip. Never attempt to adjust the gap on a used plug.

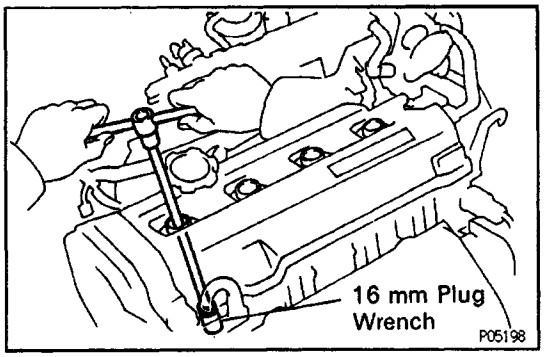

(d) Using a 16 mm plug wrench, reinstall the spark plugs.
Torque: 18 N–m (180 kgf–cm, 13 ft–lbf)
(e) Reconnect the high–tension cords.

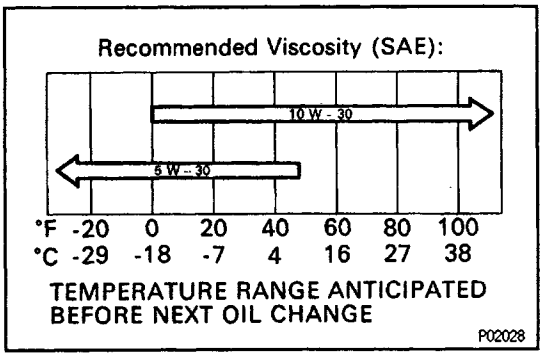

6. REPLACE ENGINE OIL AND OIL FILTER
(See Lubrication System in EG section)
Oil grade:
API grade SG Energy – Conserving II multigrade engine oil. Recommended viscosity is as shown.
Drain and refill capacity:
w/ oil filter change
4.2 liters (4.4 US qts, 3.7 Imp. qts)
w/o Oil filter change
3.8 liters (4.0 US qts, 3.3 Imp. qts)

7. REPLACE ENGINE COOLANT
(See Cooling System in EG section)
HINT:
- Use a good brand of ethylene–glycol base coo–lant and mix it according to the manufacturer's instructions.
- Using coolant which includes more than 50% ethylene – glycol (but not more than 74%) is recommended.

NOTICE:
- **Do not use alcohol type coolant.**
- **The coolant should be mixed with demineralized water or distilled water.**
- **Coolant capacity (w/ Heater):**
  13.0 liters (13.7 US qts, 11.0 Imp. qts)

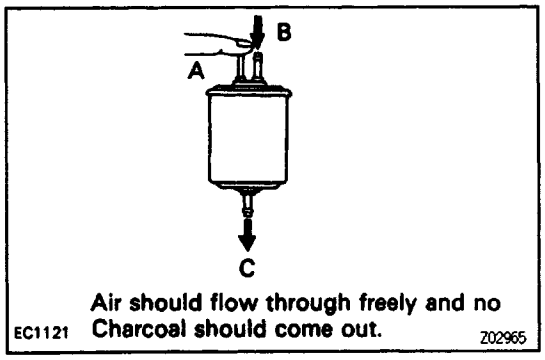

8. INSPECT CHARCOAL CANISTER
(a) Disconnect the hoses from the charcoal canister.
Label hoses for correct installation.
(b) Plug port A with your finger, and blow compressed air (294 kPa (3kgf/cm_2, 43 psi)) through port B (fuel tank side).
- Check that the air comes out of the bottom of port C without resistance.
- Check that no activated charcoal comes out.

If necessary, replace the charcoal canister–.

NOTICE: Do not attempt to wash the charcoal.

(c) Reconnect the hoses to the charcoal canister.

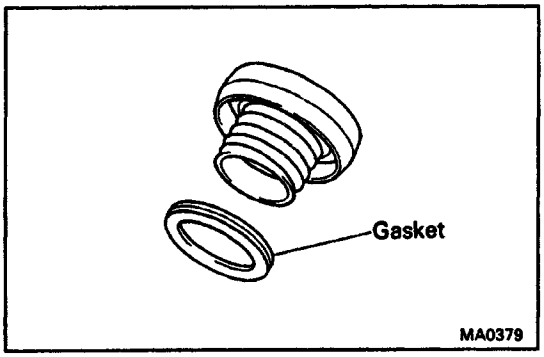

9. REPLACE GASKET IN FUEL TANK CAP

(a) Remove the old gasket from the tank cap.

NOTICE: Do not damage the tank cap.

(b) Install a new gasket by hand.

(c) Check the cap for damage or cracks.

(d) Reinstall the cap and check the torque limiter.

10. INSPECT FUEL LINES AND CONNECTIONS

Visually check the fuel lines for cracks, leakage, loose connections, deformation or tank band looseness.

11. INSPECT EXHAUST PIPES AND MOUNTINGS

Visually check the pipes, hangers and connections for severe corrosion, leaks or damage.

12. ADJUST VALVE CLEARANCE

(See Tune–Up in EG section)

Valve clearance (Cold):

Intake

0.19 – 0.29 mm (0.007 – 0.011 in.)

Exhaust

0.28 – 0.38 mm (0.011 – 0.015 in.)

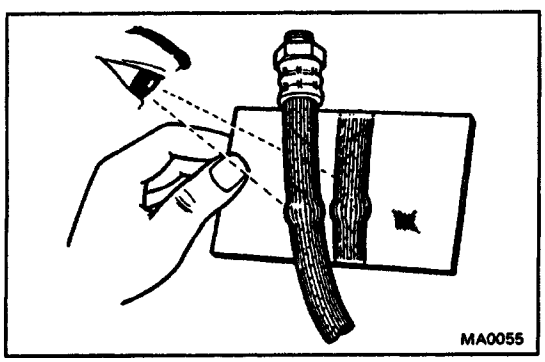

MA01H–01

BRAKES

13. INSPECT BRAKE LINE PIPES AND HOSES

HINT: Check in a well lighted area. Check the entire circumference and length of the brake hoses using a mirror as required. Turn the front wheels fully right or left before checking the front brake.

(a) Check all brake lines and hoses for:
- Damage
- Wear
- Deformation
- Cracks
- Corrosion
- Leaks
- Bends
- Twists

(b) Check all clamps for tightness and connections for leakage.

(c) Check that the hoses and lines are clear of sharp edges, moving parts and the exhaust system.

(d) Check that the lines installed in grommets pass thr–ough the center of the grommets.

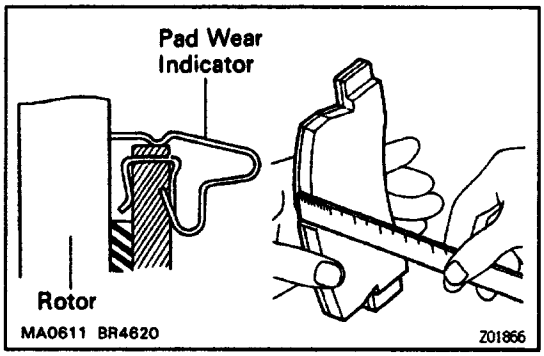

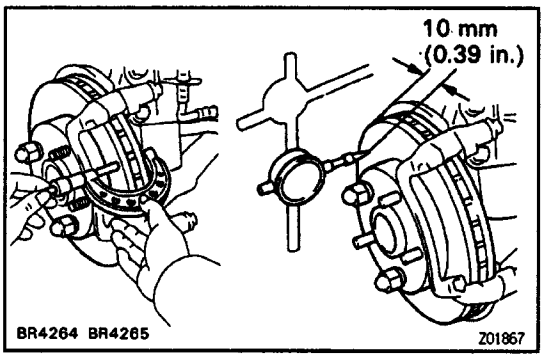

14. INSPECT BRAKE PADS AND DISCS (See BR section)

(a) Check the thickness of the disc brake pads and check for irregular wear.

Minimum pad thickness:

1.0 mm (0.039 in.)

HINT: If a squealing or scraping noise comes from the brake during driving, check the pad wear indicator to see if it is contacting the disc rotor. If so, the disc pad should be replaced.

(b) Check the disc for wear or runout.

Minimum disc thickness:

Front

24.0 mm (0.787 in.)

Rear

15.0 mm (0.590 in.)

Maximum disc runout:

Front

0.07 mm (0.0028 in.)

Rear

0.10 mm (0.0039 in.)

MA01J–01

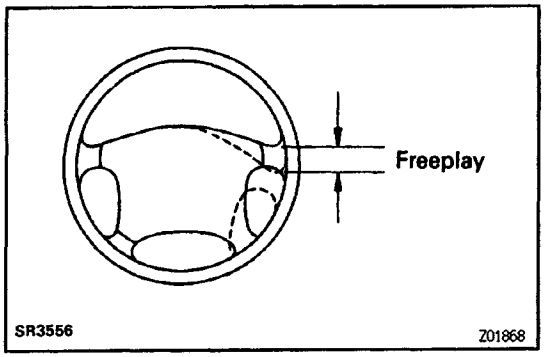

CHASSIS

15. INSPECT STEERING LINKAGE

(a) Check the steering wheel freeplay.

Maximum steering wheel freeplay:

30 mm (1.18 in.)

With the vehicle stopped and pointed straight ahead, rock the steering wheel gently back and forth with light finger pressure.

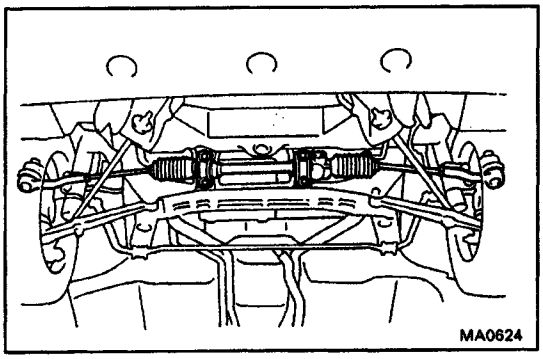

(b) Check the steering linkage for looseness or damage.

Check that:

- Tie rod ends do not have excessive play.
- Dust seals and boots are not damaged.
- Boot clamps are not loose.

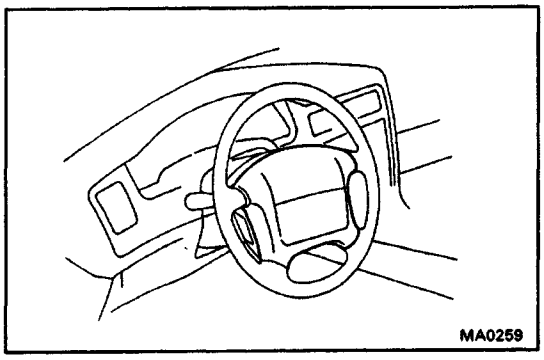

18. INSPECT SRS AIRBAG

Visually inspect the steering wheel pad (airbag and inflater).

- Use the diagnosis check to check if there are abnormalities.
- Check that there are no cuts, cracks or noticeable color changes on the surface of the steering wheel pad or in the center groove of the pad.
- Remove the steering wheel pad from the vehicle and check the wiring and steering wheel for damage and corrosion due to rusting, etc..
  If necessary, replace the steering wheel pad.

CAUTION:

- For removal and replacement of the steering wheel pad, see page SR section and be sure to perform the operation in the correct order.
- Before disposing of the steering wheel pad, the airbag must first be deployed by using an SST (See AB section).

17. INSPECT STEERING GEAR HOUSING OIL

Check the steering gear housing for oil leakage.

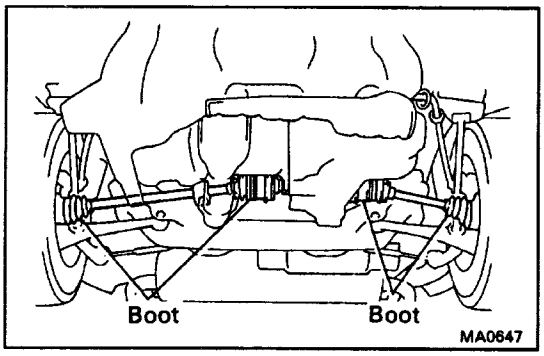

18. INSPECT DRIVE SHAFT BOOTS

Check the drive shaft boots for clamp looseness, leakage or damage.

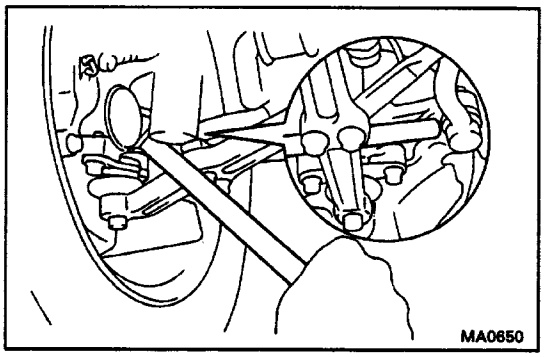

19. INSPECT BALL JOINTS AND DUST COVERS

(a) Inspect the ball joints for excessive looseness.

- Jack up the front of the vehicle and place wooden blocks with a height of 180 – 200 mm (7.09 – 7.87 in.) under the front tires.
- Lower the jack until there is about half a load on the front coil spring. Place stands under the ve–hicle for safety.
- Check that the front wheels are in a straight forward position, and block them with shocks.
- Using a lever, pry up the end of the lower arm, and check the amount of play.

Maximum ball joint vertical play:

0 mm (0 in.)

If there is play, replace the ball joint.

(b) Check the dust cover for damage.

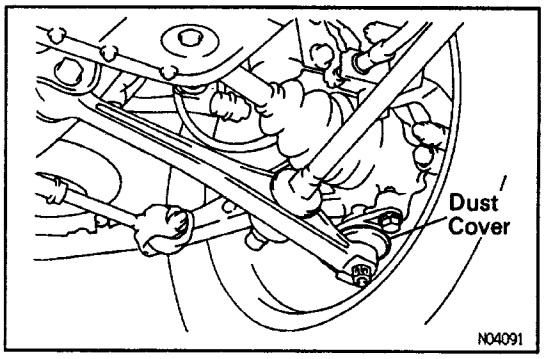

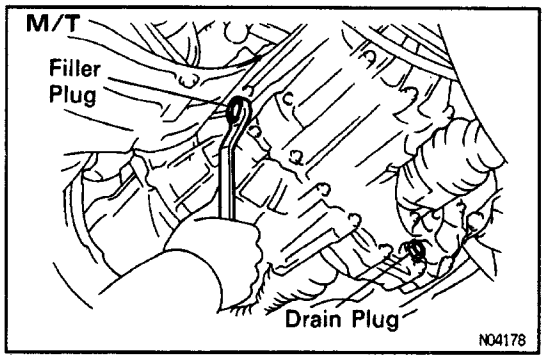

20. CHECK TRANSAXLE OIL (FLUID)

Visually check the transaxle for oil (fluid) leakage.

If leakage is found, check for the cause and repair.

21. REPLACE TRANSAXLE OIL (FLUID)
(INCL. DIFFERENTIAL OIL)

A. Replace transaxle oil (M/T)

(a) Remove the filler and drain plugs, and drain the oil.

(b) Reinstall the drain plug securely.

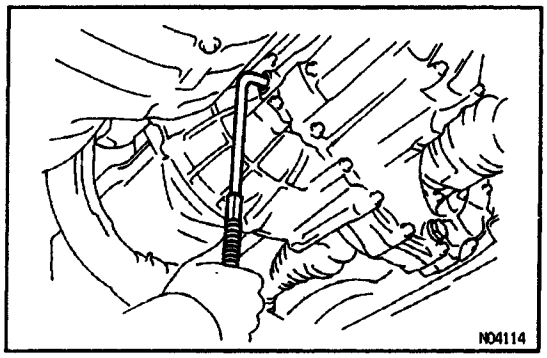

(c) Add new oil until it begins to run out of the filler hole.

Recommended transaxle oil:

Oil grade AN GL–3

Viscosity SAE 75W–90

Capacity:

2.6 liters (2.7 US qts, 2.3 Imp. qts)

In case the above oil grade is unavailable, use type A or B.

Type A:

Oil grade API GL–4

Viscosity SAE 75W–90

Type B:

oil grade AN GL–5

Viscosity SAE 75W–90

(d) Reinstall the filler plug securely.

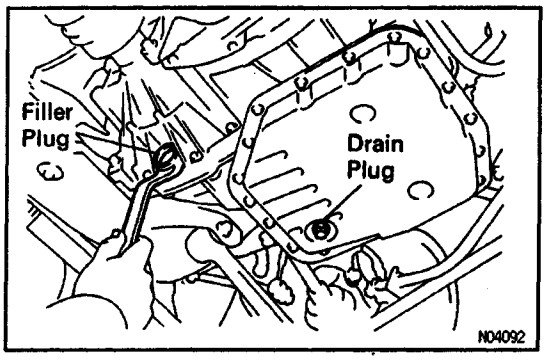

B. Replace transaxle fluid (A/T)

(a) Using a 10 mm hexagon wrench, remove the drain plug and drain the fluid.

(b) Reinstall the drain plug securely.

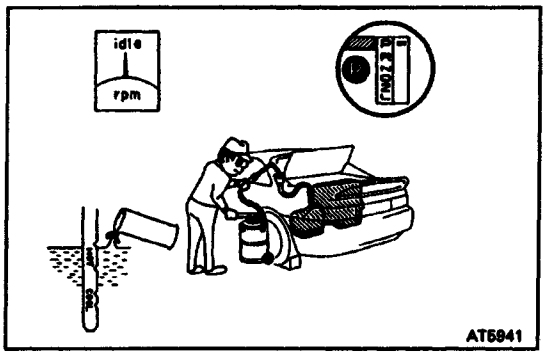

(c) With the engine OFF, and new fluid through the dip–stick tube.

Transmission fluid:

ATF DEXRON® II

Drain and refill capacity:

3.3 liters (3.6 US qts, 2.9 Imp. qts)

(d) Start the engine and shift the selector into all positions from ”P” through ”L”, and then shift into ”P”.

(e) With the engine idling, check the fluid level. Add fluid up to the ”COOL” level on the dipstick.

NOTICE: Do not over–fill. The transmission and differential are separate units.

(f) Recheck the fluid level with the normal temperature (70 – 80˚C (158 – 176˚ F)) and add as necessary.

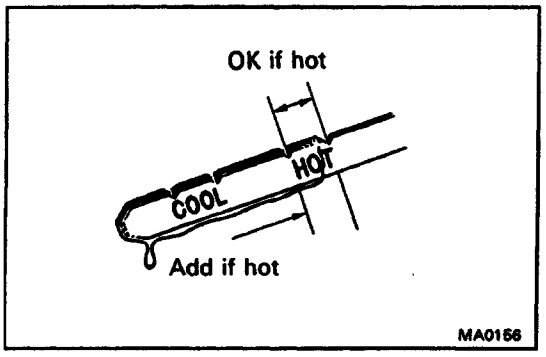

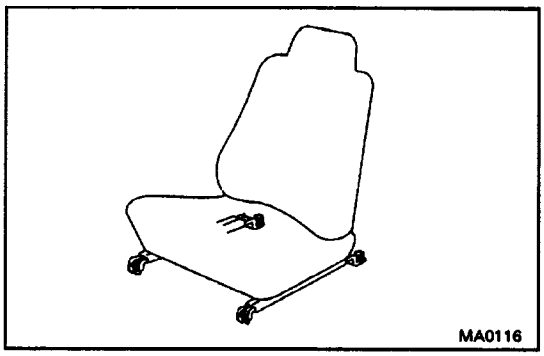

22. TIGHTEN BOLTS AND NUTS ON CHASSIS AND BODY

Tighten the following parts:

- Seat mount bolts

Torque: 37 N–m (375 kgf–cm, 27 ft–lbf)

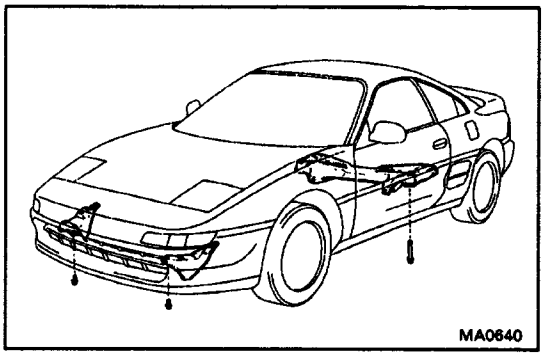

Strut bar bracket–to–body mounting bolts

Torque: 80 N–m (820 kgf–cm, 59 ft–lbf)

Rear suspension lower crossmember–to –body mounting bolts

Torque: 113 N–m (1,150 kgf–cm, 83 ft–lbf)

23. FINAL INSPECTION

(a) Check the operation of the body parts:

- Hood
  Auxiliary catch operates properly
  Hood locks securely when closed
- Doors
  Door lock operates properly
  Doors close properly
- Luggage compartment door
  Door lock operates properly
- Seats
  Seat adjusts easily and locks securely in any position
  Front seat back locks securely in any position
  Folding–down rear seat backs lock securely

(b) Road test

- Check the engine and chassis for abnormal noises.
- Check that the vehicle does not wander or pull to one side.
- Check that the brakes work properly and do not drag.

(c) Be sure to deliver a clean car and especially check:

- Steering wheel
- Shift lever knob
- All switch knobs
- Door handles
- Seats

(5S–FE)

MAINTENANCE SCHEDULE

SCHEDULE A

Maintenance operations: A = Check and adjust if necessary;
R = Replace, change or lubricate;
I = Inspect and correct or replace if necessary

CONDITIONS:

- Towing a trailer, using a camper or car top carrier.
- Repeated short trips less than 8 km (5 miles) and outside temperature remains below freezing.
- Extensive idling and/or low speed driving for long distances such as police, taxi or door-to-door delivery use.
- Operating on dusty, rough muddy or salt spread roads.

System	Service interval (Odometer reading or months, whichever comes first) / Maintenance items	Maintenance services beyond 96,000 km (60,000 miles) should continue to be performed at the same intervals shown for each maintenance schedule.																	See page (item No.)
	km x 1,000	6	12	18	24	30	36	42	48	54	60	66	72	78	84	90	96	Months	
	Miles x 1,000	3.75	7.5	11.25	15	18.75	22.5	26.25	30	33.75	37.5	41.25	45	48.75	52.5	56.25	60		
ENGINE	Timing belt(1)																R	–	MA–20 (item 1)
	Valve clearance																A	A: Every 72 months	MA–23 (item 12)
	Drive belts	I: First period, 96,000 km (60,000 miles) or 72 months. I: After that every 12,000 km (7,500 miles) or 12 months																	MA–20 (item 2)
	Engine oil and oil filter*	R	R	R	R	R	R	R	R	R	R	R	R	R	R	R	R	R: Every 6 months	MA–22 (item 6)
	Engine coolant	R: First period, 72,000 km (45,000 miles) or 36 months. R: After that every 48,000 (30,000 miles) or 24 months																	MA–22 (item 7)
	Exhaust pipes and mountings				I				I				I				I	I: Every 24 months	MA–23 (item 11)
FUEL	Air filter(2)*	I	I	I	I	I	I	I	R	I	I	I	I	I	I	I	R	I: Every 6 months R: Every 36 months	MA–21 (item 3, 4)
	Fuel lines and connections(3)								I								I	I: Every 36 months	MA–23 (item 10)
	Fuel tank cap gasket																R	R: Every 72 months	MA–23 (item 9)
IGNITION	Spark plugs (Platinum tipped type)																R	R: Every 72 months	MA–21 (item 5)
EVAP	Charcoal canister																I	I: Every 72 months	MA–22 (item 8)
BRAKES	Brake pads and discs (Front and rear)		I		I		I		I		I		I		I		I	I: Every 12 months	MA–24 (item 14)
	Brake line pipes and hoses				I				I				I				I	I: Every 24 months	MA–23 (item 13)
CHASSIS	Steering linkage		I		I		I		I		I		I		I		I	I: Every 12 months	MA–25 (item 15)
	SRS airbag	I: First period, 10 years. I: After that every 2 years.																	MA–25 (item 16)
	Drive shaft boots		I		I		I		I		I		I		I		I	I: Every 12 months	MA–26 (item 18)
	Ball joints and dust covers		I		I		I		I		I		I		I		I	I: Every 12 months	MA–26 (item 19)
	Manual transaxle, automatic transaxle and differential				R				R				R				R	R: Every 24 months	MA–26 (item 21)
	Steering gear housing oil(4)				I				I				I				I	I: Every 24 months	MA–26 (item 17)
	Bolts and nuts on chassis and body(5)		I		I		I		I		I		I		I		I	I: Every 12 months	MA–28 (item 22)

Mark indicates maintenance which is part of the warranty conditions for the Emission Control System. The warranty period is in accordance with the owner's guide or the warranty booklet. (: California specification vehicles)

(1) Applicable to vehicles operated under conditions of extensive idling and/or low speed driving for a long distance such as police, taxi or door-to-door delivery use.

(2) Applicable when operating mainly on dusty road. If not, apply SCHEDULE B.

(3) Includes inspection of fuel tank band and vapor vent system.

(4) Check for oil leaks from steering gear housing.

(5) Applicable only when operating mainly on rough, muddy roads. The applicable parts are listed below. For other usage conditions, refer to SCHEDULE B.

- Front and rear suspension member to cross body
- Strut bar bracket to body bolts
- Bolts for sheet installation

SCHEDULE B

CONDITIONS: Conditions other than those listed for SCHEDULE A.

System	Service interval (Odometer reading or months, whichever comes first) / Maintenance items	Maintenance service beyond 96,000 km (60,000 miles) should continue to be performed at the same intervals shown for each maintenance schedule.									See page (item No.)
	km x 1,000	12	24	36	48	60	72	84	96	Months	
	Miles x 1,000	7.5	15	22.5	30	37.5	45	52.5	60		
ENGINE	Valve clearance								A	A: Every 72 months	MA–23 (item 12)
	Drive belts	I: First period, 96,000 km (60,000 miles) or 72 months. I: After that every 12,000 km (7,500 miles) or 12 months									MA–20 (item 2)
	Engine oil and oil filter*	R	R	R	R	R	R	R	R	R: Every 12 months	MA–22 (item 6)
	Engine coolant	R: First period, 72,000 km (45,000 miles) or 36 months. R: After that every 48,000 km (30,000 miles) or 24 months									MA–22 (item 7)
	Exhaust pipes and mountings				I				I	I: Every 36 months	MA–23 (item 11)
FUEL	Air filter*				R				R	R: Every 36 months	MA–21 (item 4)
	Fuel lines and connections(1)				I				I	I: Every 36 months	MA–23 (item 10)
	Fuel tank cap gasket								R	R: Every 72 months	MA–23 (item 9)
IGNITION	Spark plugs (Platinum tipped type)								R	R: Every 72 months	MA–21 (item 5)
EVAP	Charcoal canister								I	I: Every 72 months	MA–22 (item 8)
BRAKES	Brake pads and discs (Front and rear)		I		I		I		I	I: Every 24 months	MA–24 (item 14)
	Brake line pipes and hoses		I		I		I		I	I: Every 24 months	MA–23 (item 13)
CHASSIS	Steering linkage		I		I		I		I	I: Every 24 months	MA–25 (item 15)
	SRS airbag	I: First period, 10 years. I: After that every 2 years.									MA–25 (item 16)
	Drive shaft boots		I		I		I		I	I: Every 24 months	MA–26 (item 18)
	Ball joints and dust covers		I		I		I		I	I: Every 24 months	MA–26 (item 19)
	Manual transaxle, automatic transaxle and differential(2)		I		I		I		I	I: Every 24 months	MA–26 (item 20)
	Steering gear housing oil(3)		I		I		I		I	I: Every 24 months	MA–26 (item 17)
	Bolts and nuts on chassis and body(4)		I		I		I		I	I: Every 24 months	MA–28 (item 22)

Mark indicates maintenance which is part of the warranty conditions for the Emission Control System. The warranty period is in accordance with the owner's guide or the warranty booklet. (: California specification vehicles)

(1) Includes inspection of fuel tank band and vapor vent system.

(2) Check for leakage.

(3) Check for oil leaks from steering gear housing.

(4) The applicable parts are listed below.

- Front and rear suspension member to cross body
- Strut bar bracket to body bolt
- Bolts for sheet installation

PREPARATION

EQUIPMENT

MA008–01

Belt tension gauge	
Dial indicator or dial indicator with magnetic base	
Micrometer	
Mirror	Brake hose
Steel square	
Tachometer	
Torque wrench	
Vernier calipers	

COOLANT

MA00A–03

Item	Capacity	Classification
Engine coolant (w/ Heater)	13.0 liters (13.7 US qts, 11.0 Imp. qts)	Ethylene–glycol base

LUBRICANT

MA00C–03

Item	Capacity	Classification
Engine oil Drain and refill w/ Oil filter change w/o Oil filter change	 4.2 liters (4.4 US qts, 3.7 Imp. qts) 3.8 liters (4.0 US qts, 3.3 Imp. qts)	 API grade SG Energy–Conserving II multigrade and recommended viscosity oil
Manual transaxle oil (Incl. Differential oil)	2.6 liters (2.7 US qts, 2.3 Imp. qts)	API GL–3 SAE 75W–90 In case the above is unavailable API GL–4 or GL–5 SAE 75W–90
Automatic transaxle fluid Drain and refill	3.3 liters (3.6 US qts, 2.9 Imp. qts)	ATF DEXRON’ 11

SERVICE SPECIFICATIONS

MA002–03

SERVICE DATA

Drive belt tension			
Alternator		New belt	120 ± 20 lbf
Alternator		Used belt	104 ± 20 lbf
A/C compressor		New belt	160 ± 25 lbf
A/C compressor		Used belt	100 ± 20 lbf
Spark plug	Recommended spark plug	ND	PK20R11
Spark plug	Recommended spark plug	NGK	BKR6EP–11
Spark plug	Correct electrode gap		1.1 mm (0.0043 in.)
Firing order			1 – 3 – 4 – 2
Valve clearance		Intake	0.19 – 0.29 mm (0.007 – 0.011 in.)
Valve clearance		Exhaust	0.28 – 0.38 mm (0.011 – 0.015 in.)
Front and rear brake			
Pad thickness		Minimum	1.0 mm (0.039 in.)
Disc thickness	Front	Minimum	24.0 mm (0.787 in.)
Disc thickness	Rear	Minimum	15.0 mm (0.590 in.)
Disc runout	Front	Maximum	0.07 mm (0.0028 in.)
Disc runout	Rear	Maximum	0.10 mm (0.0039 in.)
Front axle and suspension			
Bell joint vertical play		Maximum	0 mm (0 in.)
Steering wheel freeplay		Maximum	30 mm (1.18 in.)

TORQUE SPECIFICATIONS

MA00U–03

Part tightened	N–m	kgf–cm	ft–lbf
Seat mounting bolts	37	375	27
Strut bar bracket–to–body mounting bolts	80	820	59
Rear suspension lower crossmember–to–body mounting bolts	113	1,150	83

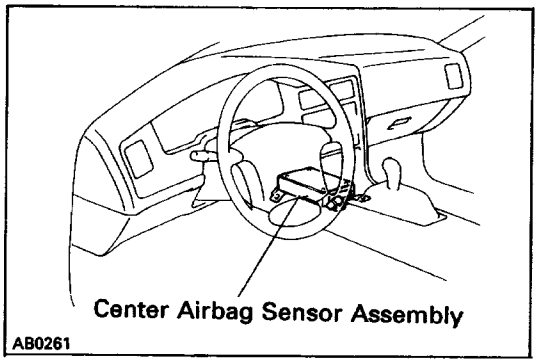

CENTER AIRBAG SENSOR ASSEMBLY DISPOSAL

The center airbag sensor assembly contains mercury. After performing replacement, do not destroy the old part. When scrapping the vehicle or replacing the center airbag sensor assembly itself, remove the center airbag sensor assembly and dispose of it as toxic waste.

CENTER AIRBAG SENSOR ASSEMBLY

Remove and install the parts as shown.

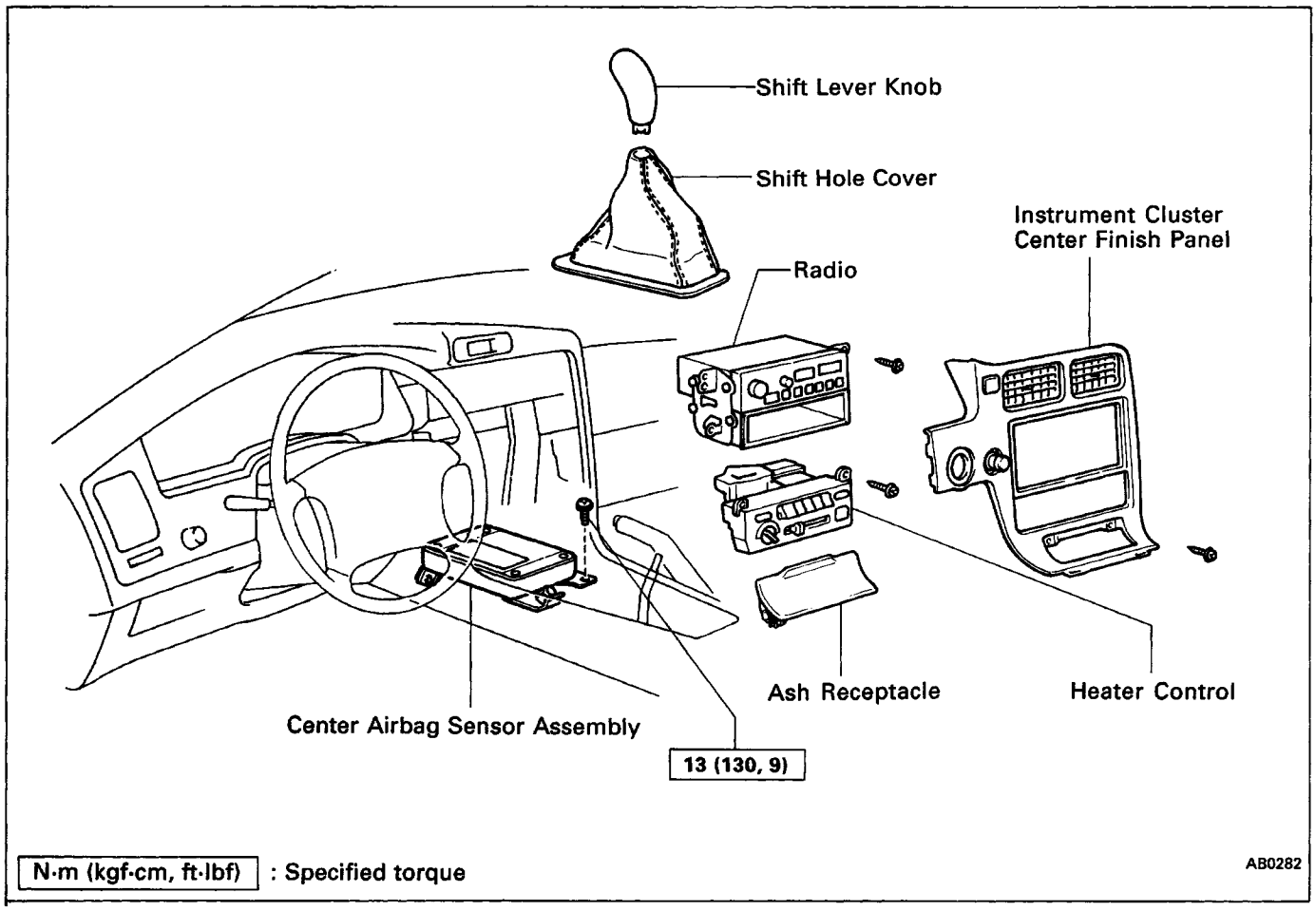

(MAIN POINTS OF REMOVAL AND INSTALLATION)

CAUTION: Work must be started after approx. 30 seconds or longer from the time the ignition switch is turned to the LOCK position and the negative (–) terminal cable is disconnected from the battery (See page AB–2).

NOTICE:

- **Do not open the cover or the case of the ECU and various computers unless absolutely necessary. (If the IC terminals are touched, the IC may be destroyed by static electricity.)**
- **Never use airbag parts from another vehicle. When replacing parts, replace with new parts.**
- **Never repair a sensor in order to reuse it.**

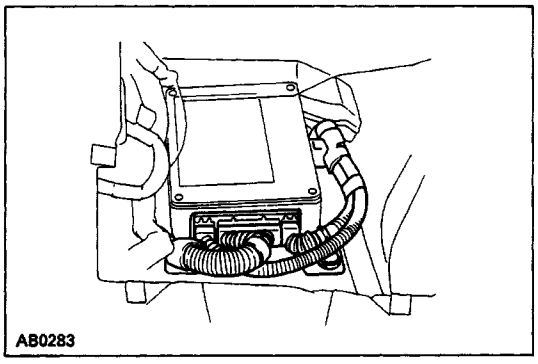

REMOVE AND INSTALL CENTER AIRBAG SENSOR ASSEMBLY

(a) Disconnect and connect the connectors.

NOTICE: Removal and installation of the connectors is done with the sensor assembly installed.

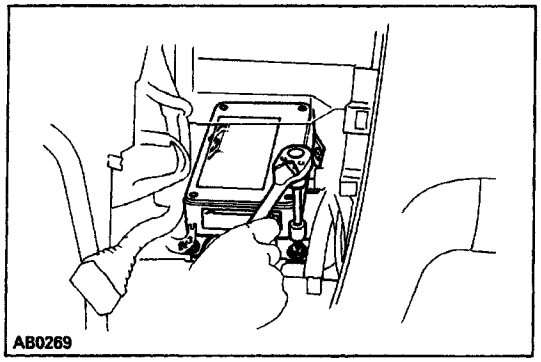

(b) Using a torx wrench, loosen and tighten the four screws.
Torx wrench: T40 (Part No. 09042–00020 or locally manufactured tool)
Torque: 13 N–m (130 kgf–cm, 9 ft–lbf)
NOTICE:

- **Make sure the sensor assembly is installed to the specified torque.**
- **If the sensor assembly has been dropped, or there are cracks, dents or other defects in the case, bracket or connector, replace the sensor assembly with a new one.**
- **when installing the sensor assembly, take care that the airbag wirings do not interfere with other parts and are not pinched between other parts.**
- **After installation, shake the sensor assembly to check that there is no looseness.**

FRONT AIRBAG SENSOR

Remove and install the parts as shown.

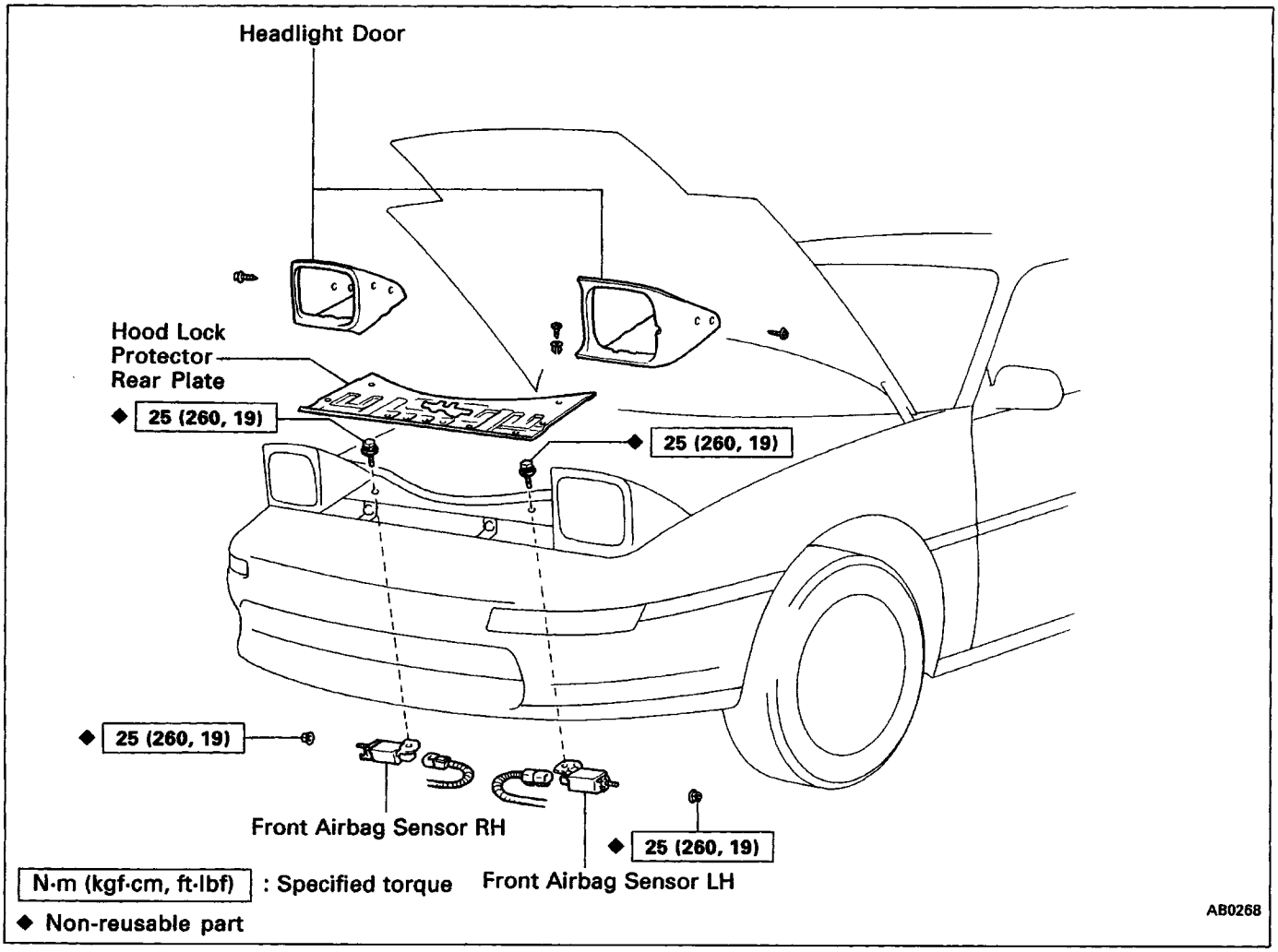

(MAIN POINTS OF REMOVAL AND INSTALLATION)

CAUTION: Work must be started after approx. 30 seconds or longer from the time the ignition switch is turned to the LOCK position and the negative (–) terminal cable is disconnected from the battery (See page AB–2).

NOTICE:

- **If the wiring connector of the airbag system is disconnected with the ignition switch at ON or ACC, diagnostic codes will be recorded.**
- **Never use airbag parts from another vehicle. When replacing parts, replace with new parts.**
- **Never reuse the sensor involved in a collision when the airbag has deployed.**
- **Never repair a sensor in order to reuse it.**

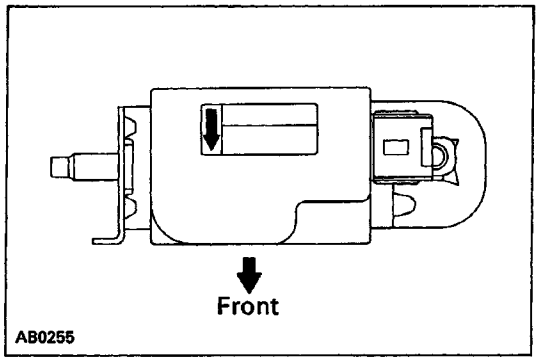

INSTALL FRONT AIRBAG SENSOR

Install the sensor with the arrow on the sensor facing toward the front of the vehicle.

Torque: 25 N–m (260 kgf–cm, 19 ft–lbf)

NOTICE:

- **Make sure the sensor is installed to the specified torque.**
- **If the sensor has been dropped, or there are cracks, dents or other defects in the case, bracket or connec–tor, replace the sensor with a new one.**
- **The sensor set bolts and nuts have been anti–rust treated.**
  When the sensor is removed, always replace the set bolt and nut with new ones.
- **After installation, shake the sensor to check that there is no looseness.**
- **The front sensor is equipped with an electrical connection check mechanism. Be sure to lock this mechanism securely when connecting the connector. If the connector is not securely locked, a malfunction code will be detected by the diagnosis system.**
- **Check that the dimensions of the body where the front airbag sensor is installed match those in the body dimension drawings on page BO–80.**
  (The airbag may malfunction, or may not work, if the mounting angle or dimensions of the sensor mount are not correct.)

COMPONENT PARTS REMOVAL AND INSTALLATION

STEERING WHEEL PAD AND SPIRAL CABLE

Remove and install the parts as shown.

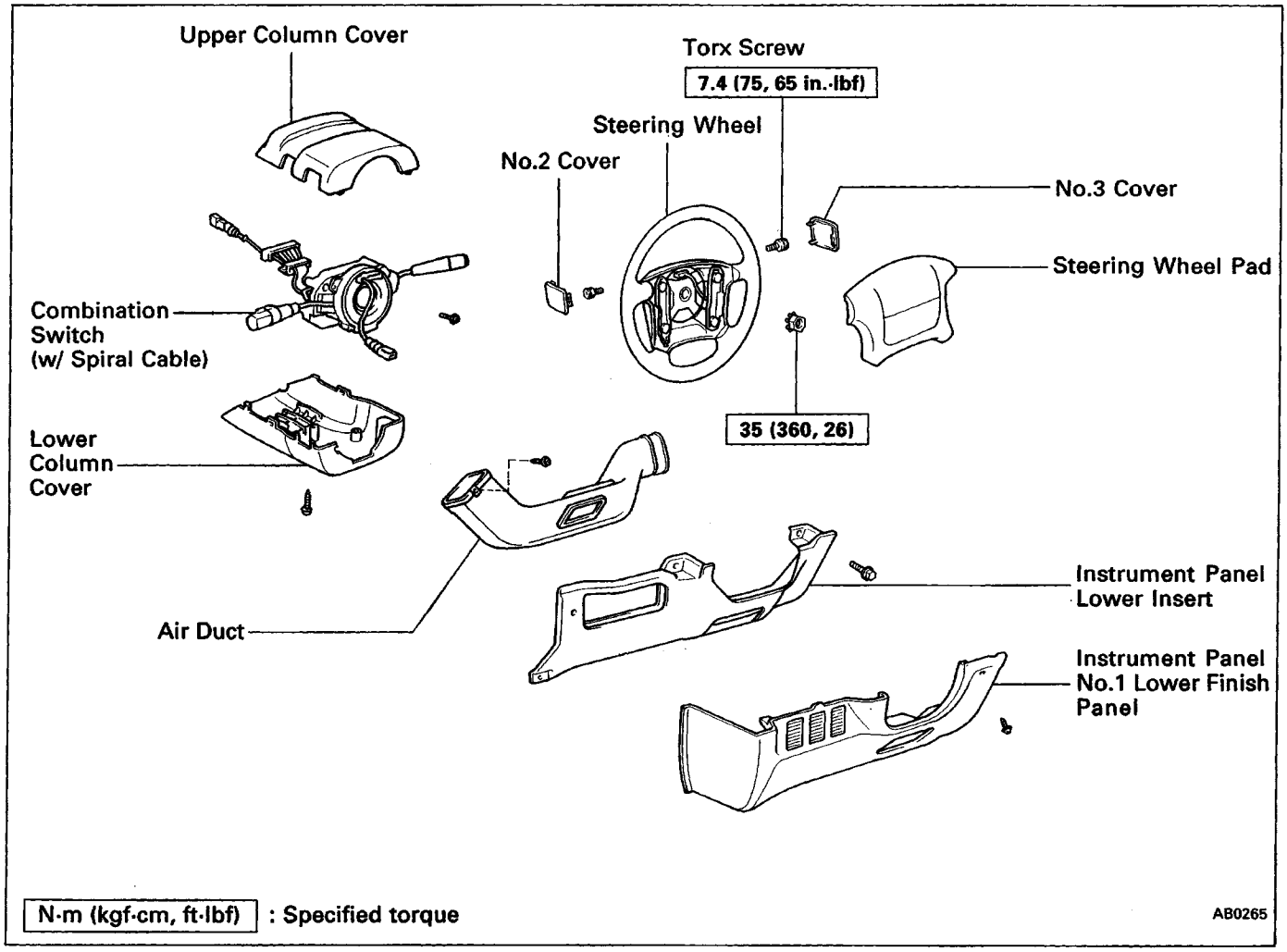

(MAIN POINTS OF REMOVAL AND INSTALLATION)

CAUTION: Work must be started after approx. 30 seconds or longer from the time the ignition switch is turned to the LOCK position and the negative (–) terminal cable is disconnected from the battery (See page AB–2).

NOTICE:

- **If the wiring connector of the airbag system is disconnected with the ignition switch at ON or ACC, diagnostic codes will be recorded.**
- **Never use airbag parts from another vehicle. When replacing parts, replace with new parts.**

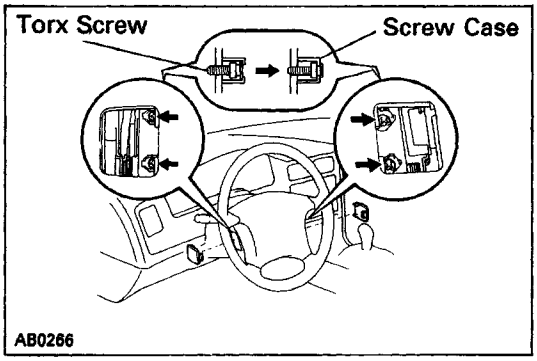

1. REMOVE STEERING WHEEL PAD

(a) Remove negative terminal H from the battery.

(b) Place the front wheels facing straight ahead.

(c) Using a torx wrench, loosen the four screws.

Torx wrench: T30 (Part No. 09042–00010 or locally manufactured tool

(d) Loosen the torx screws until the groove along the screw circumference catches on the screw case.

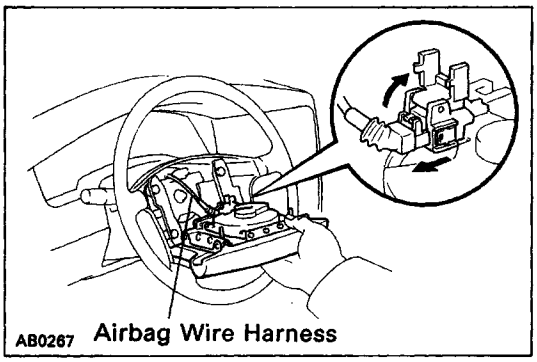

(e) Pull the wheel pad out from the steering wheel and disconnect the airbag connector.

NOTICE: When removing the wheel pad, take care not to pull the airbag wire harness.

CAUTION:

- **When storing the wheel pad, keep the upper surface of the pad facing upward (See pages AB–3, 4).**
- **Never disassemble the wheel pad.**

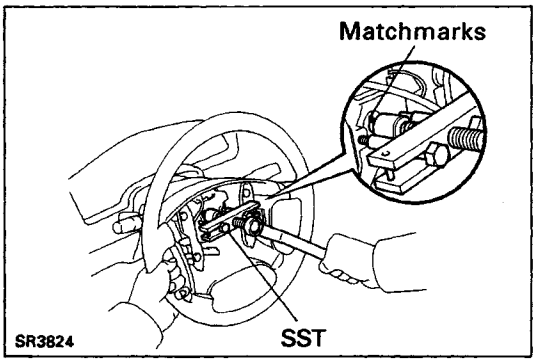

2. REMOVE STEERING WHEEL

(a) Disconnect the connector.

(b) Remove the set nut.

(c) Place matchmarks on the steering wheel and main shaft.

(d) Using SST, remove the steering wheel.

SST 09213–31021

3. REMOVE AND INSTALL SPIRAL CABLE FROM/TO COMBINATION SWITCH

(See page BE–26)

NOTICE: Do not disassemble the spiral cable or apply oil to it.

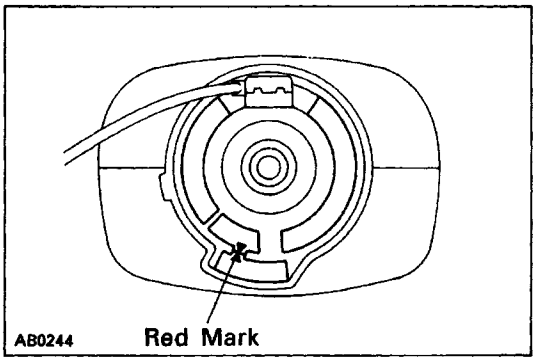

4. CENTER SPIRAL CABLE

(a) Check that the front wheels are facing straight ahead.

(b) Turn the spiral cable counterclockwise by hand until it becomes harder to turn the cable.

(c) Then rotate the spiral cable clockwise about 2 1/2 turns to align the red mark.

HINT: The spiral cable will rotate about 2 1/2 turns to either left or right of the center.

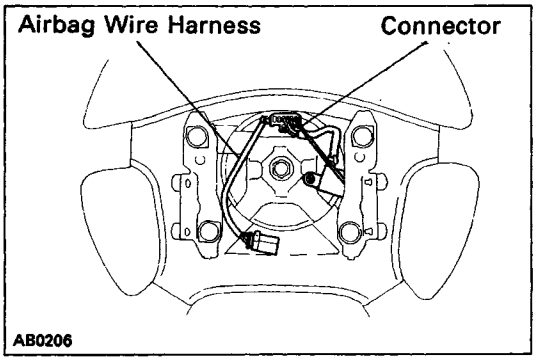

5. INSTALL STEERING WHEEL

(a) Align matchmarks on the steering wheel and main shaft, and install the steering wheel to the main shaft.

(b) Install and torque the set nut.

Torque: 35 N–m (360 kgf–cm, 26 ft–lbf)

(c) Connect the connector.

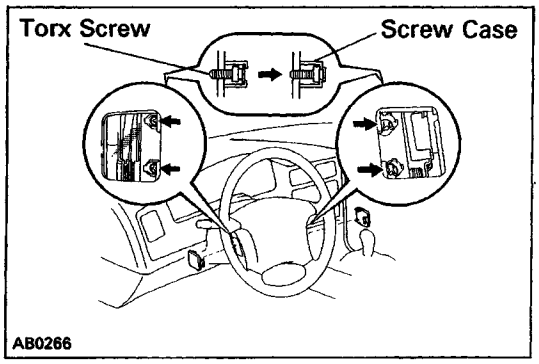

6. INSTALL STEERING WHEEL PAD

(a) Connect the airbag connector.

(b) Install the wheel pad after confirming that the circum–ference groove of the torx screws is caught on the screw case.

(c) Using a torx wrench, tighten the four screws.

Torque: 7.4 N–m (75 kgf–cm, 65 in.–lbf)

NOTICE:

- **Make sure the wheel pad is installed to the specified torque.**
- **If the wheel pad has been dropped, or there are cracks, dents or other defects in the case or connec–tor, replace the wheel pad with a new one.**
- **When installing the wheel pad, take care that the wirings do not interfere with other parts and are not pinched between other parts.**

7. CHECK STEERING WHEEL CENTER POINT

DESCRIPTION

The SRS (Supplemental Restraint System) airbag, together with the seat belt, is designed to help protect the driver. In a collision, the airbag sensors detect the shock, and if the front–to–rear shock is greater than a specified value, an airbag stored in the steering wheel pad is inflated instanta–neously to help reduce the shock to the driver.

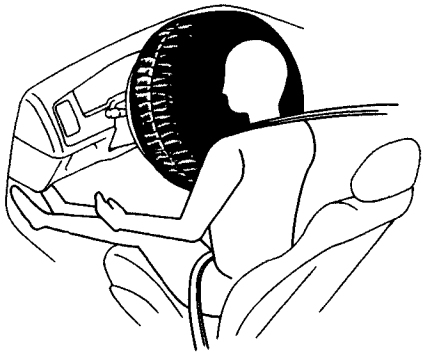

AB0279

LOCATION OF COMPONENTS

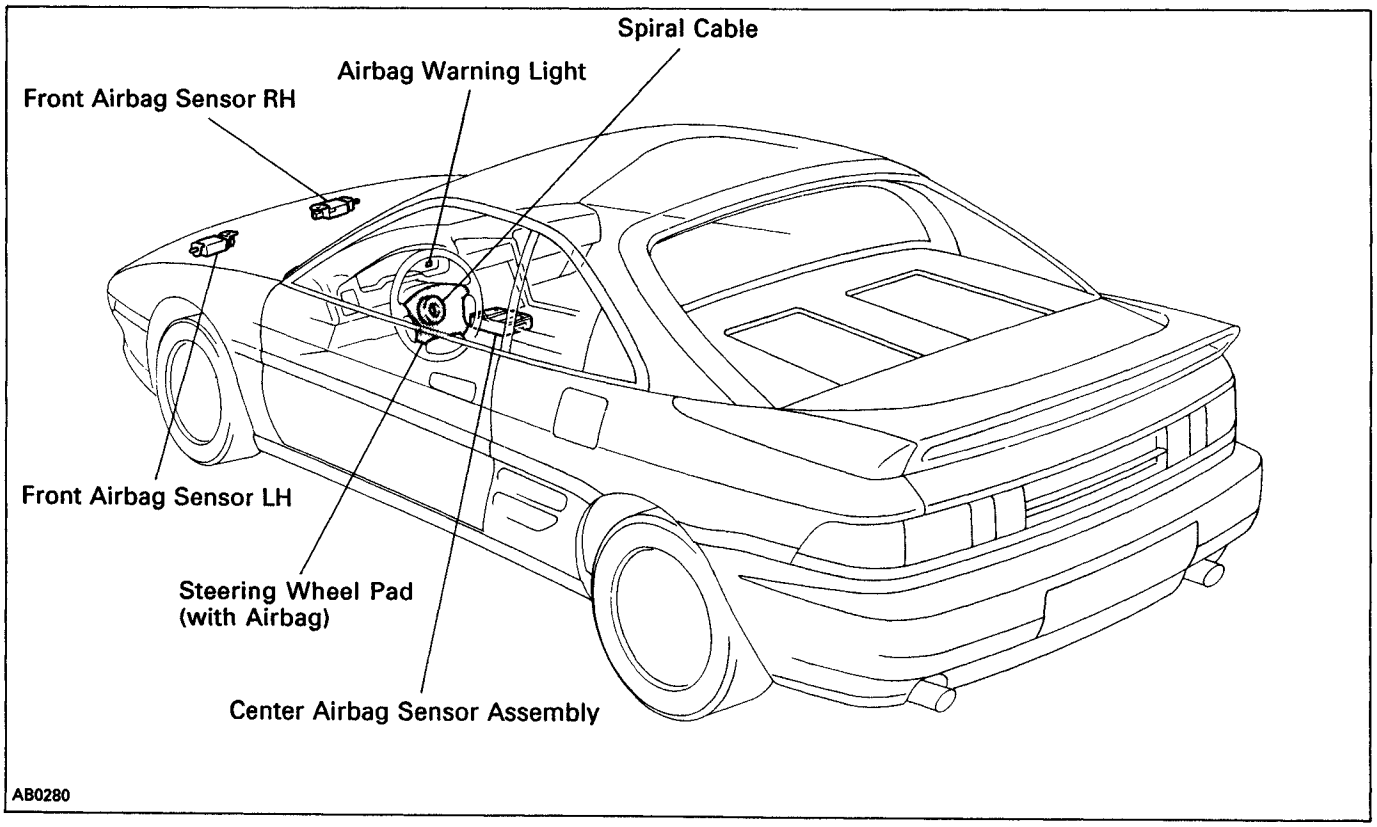

AB0280

WIRING DIAGRAM

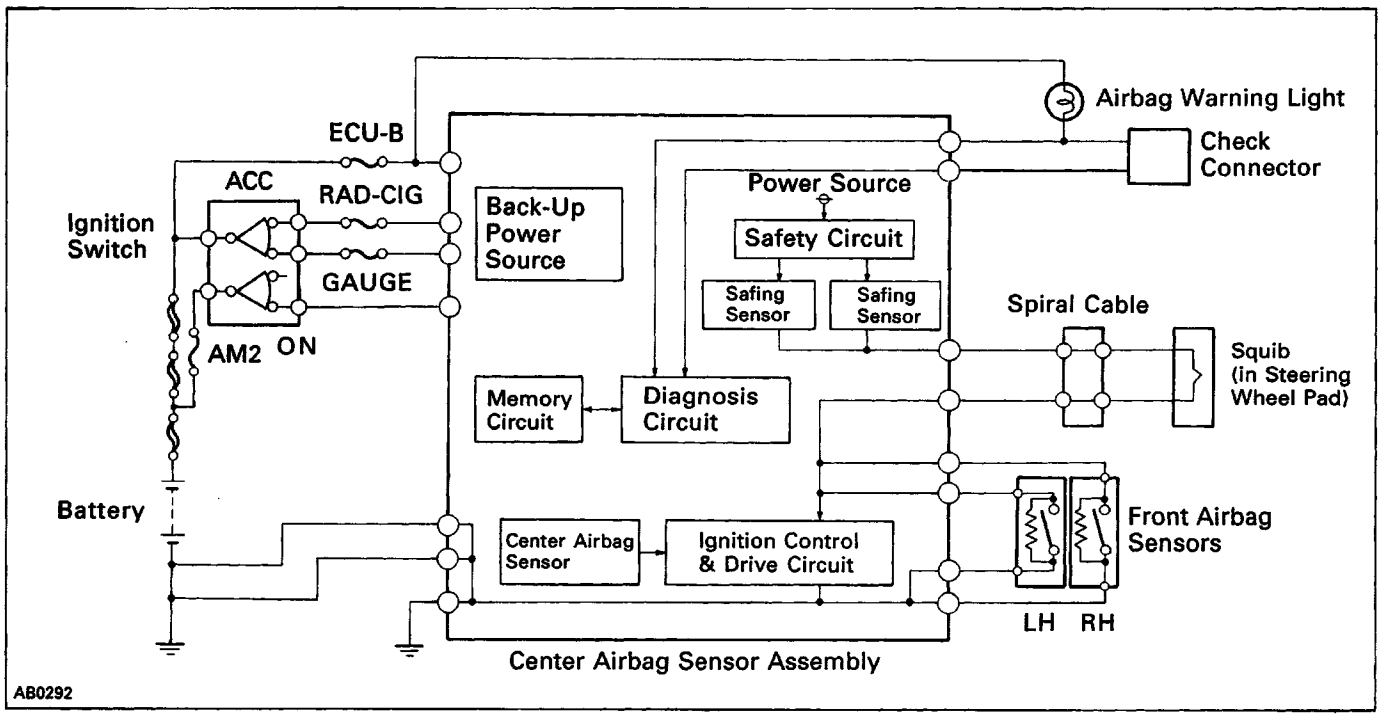

CENTER AIRBAG SENSOR ASSEMBLY CONNECTORS

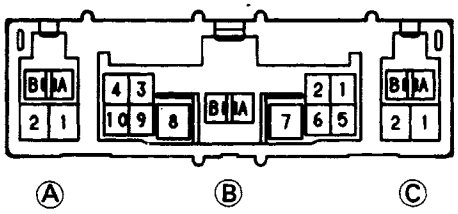

AB0055

Connector	No.	Symbol	Terminal Name
Ⓐ	1	–SL	LH Front Airbag Sensor (–)
	2	+SL	LH Front Airbag Sensor (+)
Ⓑ	1	IG_2	Power Source (AM2 Fuse)
	2	IG_1	Power Source (GAUGE Fuse)
	3	ACC	Power Source (RAD–CIG Fuse)
	4	+B	Battery (ECU–B Fuse)
	5	E2	Ground
	6	LA	Air–bag Warning Light
	7	D^-	Squib (–)
	8	D^+	Squib (+)
	9	Tc	Diagnosis
	10	E_1	Ground
Ⓒ	1	+SR	RH Front Airbag Sensor (+)
	2	–SR	RH Front Airbag Sensor (–)
Ⓐ Ⓑ Ⓒ	A	—	Electrical Connection Check Mechanism
	B	—	Electrical Connection Check Mechanism

SRS AIRBAG

GENERAL DESCRIPTION

The 1993 MR2 for USA specifications is equipped with an SRS (Supplemental Restraint System) airbag.
Failure to carry out service operations in the correct sequence could cause the airbag system to unexpectedly deploy during servicing, possibly leading to a serious accident.
Further, if a mistake is made in servicing the airbag system, it is possible the airbag may fail to operate when required.
Before performing servicing (including removal or installation of parts, inspection or replacement), be sure to read the following items carefully, then follow the correct procedure described in the repair manual.

1. Malfunction symptoms of the airbag system are difficult to confirm, so the diagnostic codes become the most important source of information when troubleshooting.
   When troubleshooting the airbag system, always inspect the diagnostic codes before disconnecting the battery (See page AB–25).
2. **Work must be started after approx. 20 seconds or longer from the time the ignition switch is turned to the LOCK position and the negative (–) terminal cable is disconnected from the battery. (The airbag system is equipped with a back–up power source so that if work is started within 20 seconds of disconnecting the negative (–) terminal cable of the battery, the airbag may be deployed.)**
   When the negative (–) terminal cable is disconnected from the battery, memory of the clock and audio systems will be cancelled. So before starting work, make a record of the contents memorized by the audio memory system. Then when work is finished, reset the audio system as before and adjust the clock.
   To avoid erasing the memory of each memory system, never use a back–up power supply from outside the vehicle.
3. Even in cases of a minor collision where the airbag does not deploy, the front airbag sensors and the steering wheel pad should be inspected (See page AB–11).
4. Never use airbag parts from another vehicle. When replacing parts, replace them with new parts.
5. Before repairs, remove the airbag sensors if shocks are likely to be applied to the sensors during repairs.
6. The center airbag sensor assembly contains mercury.
   After performing replacement, do not destroy the old parts. When scrapping the vehicle or replacing the center airbag sensor assembly itself, remove the center airbag sensor assembly and dispose of it as toxic waste.
7. Never disassemble and repair the front airbag sensors, center airbag sensor assembly or steering wheel pad in order to reuse it.
8. If the front airbag sensors, center airbag sensor assembly or steering wheel pad have been dropped, or if there are cracks, dents or other defects in the case, bracket or connector, replace them with new ones.
9. Do not expose the front airbag sensors, center airbag sensor assembly or steering wheel pad directly to hot air or flames.
10. Use a volt/ohmmeter with high impedance (10 kΩ/V minimum) for troubleshooting of the electrical circuit.
11. Information labels are attached to the periphery of the airbag components. Follow the instructions on the notices.
12. After work on the airbag system is completed, perform the airbag warning light check (See page AB–30).

FRONT AIRBAG SENSOR

1. Never reuse the front airbag sensors involved in a col–lision when the airbag has deployed. (Replace both the left and right airbag sensors.)
2. Install the front airbag sensor with the arrow on the sensor facing toward the front of the vehicle.
3. The front airbag sensor set bolts and nuts have been anti–rust treated.
   When the sensor is removed, always replace the set bolt and nut with new ones.

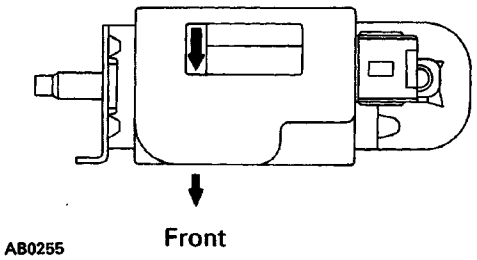

AB0255

4. The front airbag sensor is equipped with an electrical connection check mechanism. Be sure to lock this mechanism securely when connecting the connector. If the connector is not securely locked, a malfunction code will be detected by the diagnosis system (See page AB–9).

SPIRAL CABLE (in COMBINATION SWITCH)

The steering wheel must be fitted correctly to the steering column with the spiral cable at the neutral position, otherwise cable disconnection and other troubles may result. Refer to page AB–16 of this manual concerning correct steering wheel installation.

STEERING WHEEL PAD (with AIRBAG)

1. When removing the steering wheel pad or handling a new steering wheel pad, it should be placed with the pad top surface facing up.
In this case, the twin–lock type connector lock lever should be in the locked state and care should be taken to place it so the connector will not be damaged. And do not store a steering wheel pad on top of another one. (Storing the pad with its metallic surface up may lead to a serious accident if the airbag inflates for some reason.)

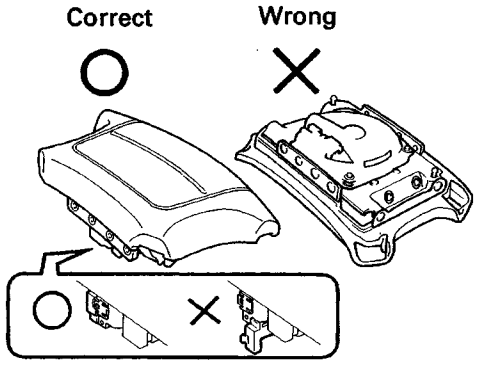

AB0256

2. Never measure the resistance of the airbag squib. (This may cause the airbag to deploy, which is very dangerous.)

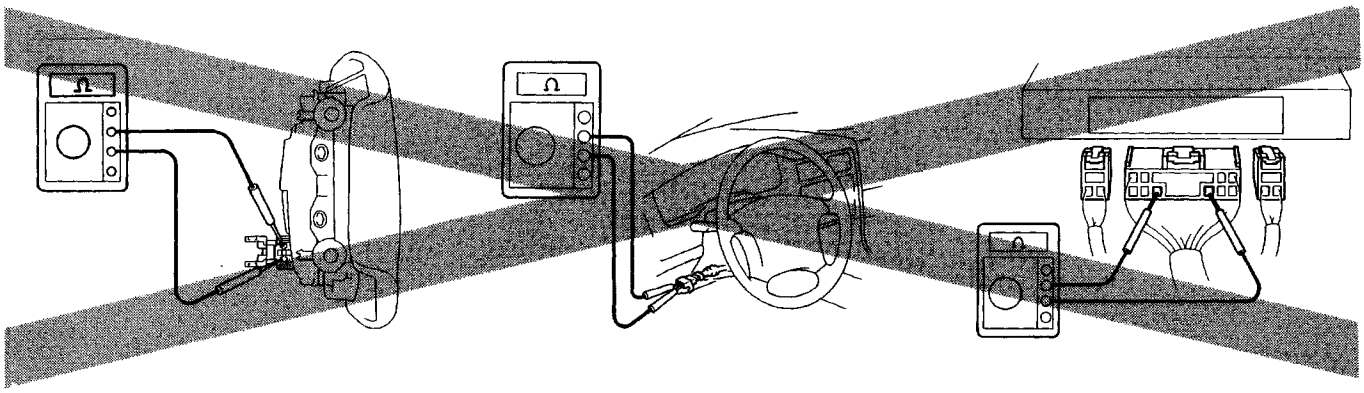

3. Grease should not be applied to the steering wheel pad and the pad should not be cleaned with detergents of any kind.
4. Store the steering wheel pad where the ambient temperature remains below 93˚C (200˚F), without high humidity and away from electrical noise.
5. When using electric welding, first disconnect the airbag connector (yellow color and 2 pins) under the steering column near the combination switch connector before starting work.
6. When disposing of a vehicle or the steering wheel pad alone, the airbag should be deployed using an SST before disposal (See page AB–83). Perform the operation in a place away from electrical noise.

CENTER AIRBAG SENSOR ASSEMBLY

The connectors to the center airbag sensor assembly should be connected or disconnected with the sensor mounted on the floor. If the connectors are connected or disconnected while the center airbag sensor assembly is not mounted to the floor, it could cause undesired ignition of the airbag system.

WIRE HARNESS AND CONNECTOR

The airbag system wire harness is integrated with the cowl wire harness assembly and luggage compartment wire harness assembly. The wires for the airbag wire harness are encased in a yellow corrugated tube. All the connectors for the system are also a standard yellow color. If the airbag system wire harness becomes disconnected or the connector becomes broken due to an accident, etc., repair or replace it as shown page AB–22.

INSPECTION ITEMS AND REPLACEMENT REQUIREMENTS

If a vehicle is brought in for an airbag system inspection, or if a vehicle which has been involved in a collision is inspected, perform the inspection in accordance with the following procedure. If any problems are discovered, replace the affected part with a new one.

Steering Wheel Pad (with Airbag), Steering Wheel and Spiral Cable

INSPECTION ITEMS

1. VEHICLES NOT INVOLVED IN A COLLISION

(a) Perform a diagnostic system check (See page AB–30).

(b) Perform a visual check which includes the following items with the steering wheel pad (with airbag) installed in the vehicle.

- Check for cuts, minute cracks or marked discoloration of the steering wheel pad top surface and grooved portion.

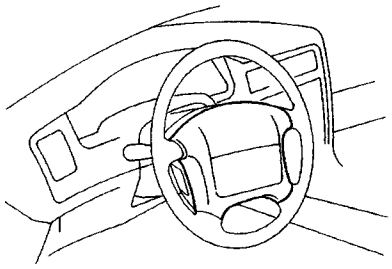
AB0259

2. VEHICLES INVOLVED IN A COLLISION
(IF THE AIRBAG IS NOT DEPLOYED)

(a) Perform a diagnostic system check (See page AB–30).

(b) Perform a visual check which includes the following items with the steering wheel pad (with airbag) removed from the vehicle.

- Check for cuts or cracks in, or marked discoloration of the steering wheel pad top surface and grooved portion.
- Check for cuts and cracks in, or chipping of connectors and wire harnesses.
- Check for deformation of the horn button contact plate of the steering wheel.

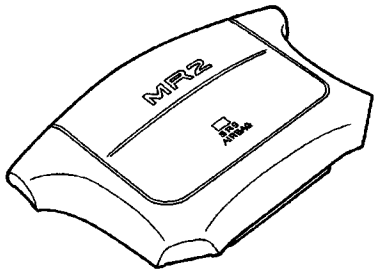

AB0263

HINT:

- If the horn button contact plate of the steering wheel is deformed, never repair it. Always replace the steering wheel with a new one.
- There should be no interference between the steering wheel pad and the steering wheel, and the clearance should be uniform all the way around when the new steering wheel pad is installed on the steering wheel.

CAUTION: For removal and installation of the steering wheel pad, see page AB–15, "REMOVAL AND INSTALLATION" and be sure to follow the correct procedure.

Horn Button Contact Plate

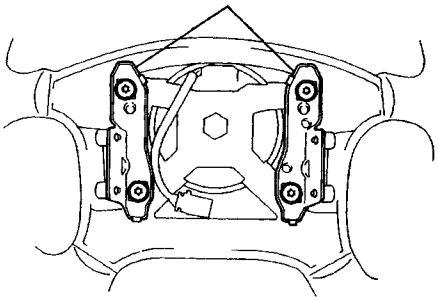
AB0204

(IF THE AIRBAG IS DEPLOYED)

(a) Perform a diagnostic system check (See page AB–30).

(b) Perform a visual check which includes the following items with the steering wheel pad (with airbag) removed from the vehicle.

- Check for deformation of the horn button contact plate of the steering wheel.
- Check for damage to the spiral cable connector and wire harness.

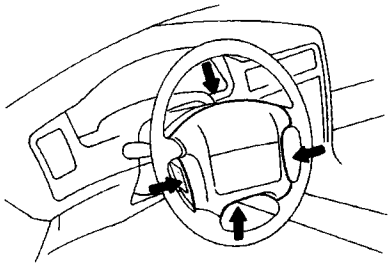
AB0259

HINT:

- If the horn button contact plate of the steering wheel is deformed, never repair it. Always replace the steering wheel with a new one.
- There should be no interference between the steering wheel pad and the steering wheel, and the clearance should be uniform all the way around when the new steering wheel pad is installed on the steering wheel.

REPLACEMENT REQUIREMENTS

In the following cases, replace the steering wheel pad, steering wheel or spiral cable.

CAUTION: For replacement of the steering wheel pad, see page AB–15, "REMOVAL AND IN–STALLATION" and be sure to follow the correct procedure.

- If the airbag has been deployed.
- If the steering wheel pad or spiral cable has been found to be faulty in troubleshooting.
- If the steering wheel pad, steering wheel or spiral cable has been found to be faulty during the check in item **1.** – (b) or **2.** – (b).
- If the steering wheel pad has been dropped.

Front Airbag Sensor

INSPECTION ITEMS

1. VEHICLES NOT INVOLVED IN A COLLISION

- Perform a diagnostic system check (See page AB–30).

2. VEHICLES INVOLVED IN A COLLISION

(a) Perform a diagnostic system check (See page AB–30).

(b) If the front bumper of the car or its periphery is dam–aged, perform visual check for damage to the front airbag sensor, which includes the following items even if the airbag was not deployed:

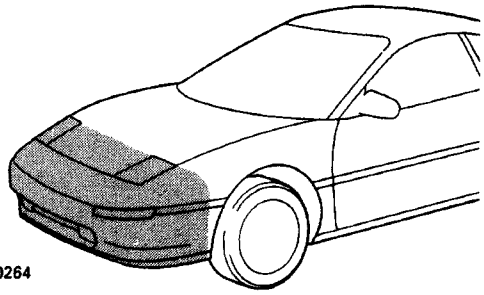
AB0264

- Bracket deformation.
- Peeling of paint from the bracket.
- Cracks, dents or chips in the case.
- Cracks and dents in, or chipping and scratches of the connector.
- Peeling off of the label or damage to the series number.

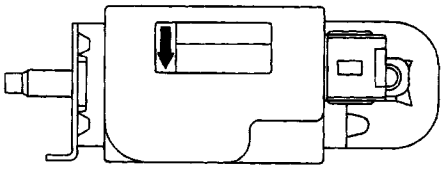
AB0255

Also refer to the body dimension drawings on page BO–78 and check the dimensions and mounting surface angle of the body area where the front airbag sensors are mounted.

(The airbag may malfunction, or may not work, if the mounting angle or dimensions of the sensor mount are not correct.)

REPLACEMENT REQUIREMENTS

In the following cases, replace the front airbag sensor.

NOTICE: For replacement of the front airbag sensor, see page AB–17, REMOVAL AND INSTALLATION".

- If the airbag has been deployed in a collision.
  (Replace both the left and right airbag sensors.)
- If the front airbag sensor has been found to be faulty in troubleshooting.
- If the front airbag sensor has been found to be faulty during the check in item **2.** – (b).
- If the front airbag sensor has been dropped.

Center Airbag Sensor Assembly

INSPECTION ITEMS

1. VEHICLES NOT INVOLVED IN A COLLISION

- Perform a diagnostic system check (See page AB–30).

2. VEHICLES INVOLVED IN A COLLISION

(IF THE AIRBAG IS NOT DEPLOYED)

- Perform a diagnostic system check (See page AB–30).

(IF THE AIRBAG IS DEPLOYED)

(a) Perform a diagnostic system check (See page AB–30).

(b) Check the following items in the center airbag sensor assembly:

- Deformation of the bracket or case.
- Vinyl seat broken.
- Damage to the connector.

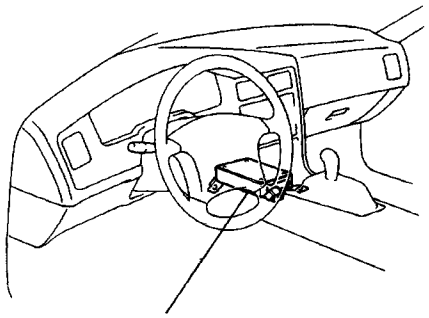

Center Airbag Sensor Assembly

AB0261

NOTICE: If the center airbag sensor assembly interferes with any other parts, perform a check after repairs.

REPLACEMENT REQUIREMENTS

In the following cases, replace the center airbag sensor assembly.

NOTICE: For replacement of the center airbag sensor assembly, see page AB–19, "REMOVAL AND INSTALLATION".

- If the center airbag sensor assembly has been found to be faulty in troubleshooting.
- If the center airbag sensor assembly has been found to be faulty during the check in item **2.** – (b).
- If the center airbag sensor assembly has been dropped.

Wire Harness and Connector

HINT: The airbag system wire harness is integrated with the cowl wire harness assembly and luggage compartment wire harness assembly. The wires for the airbag wire harness are encased in a yellow corrugated tube and all the connectors in the system are a standard yellow color.

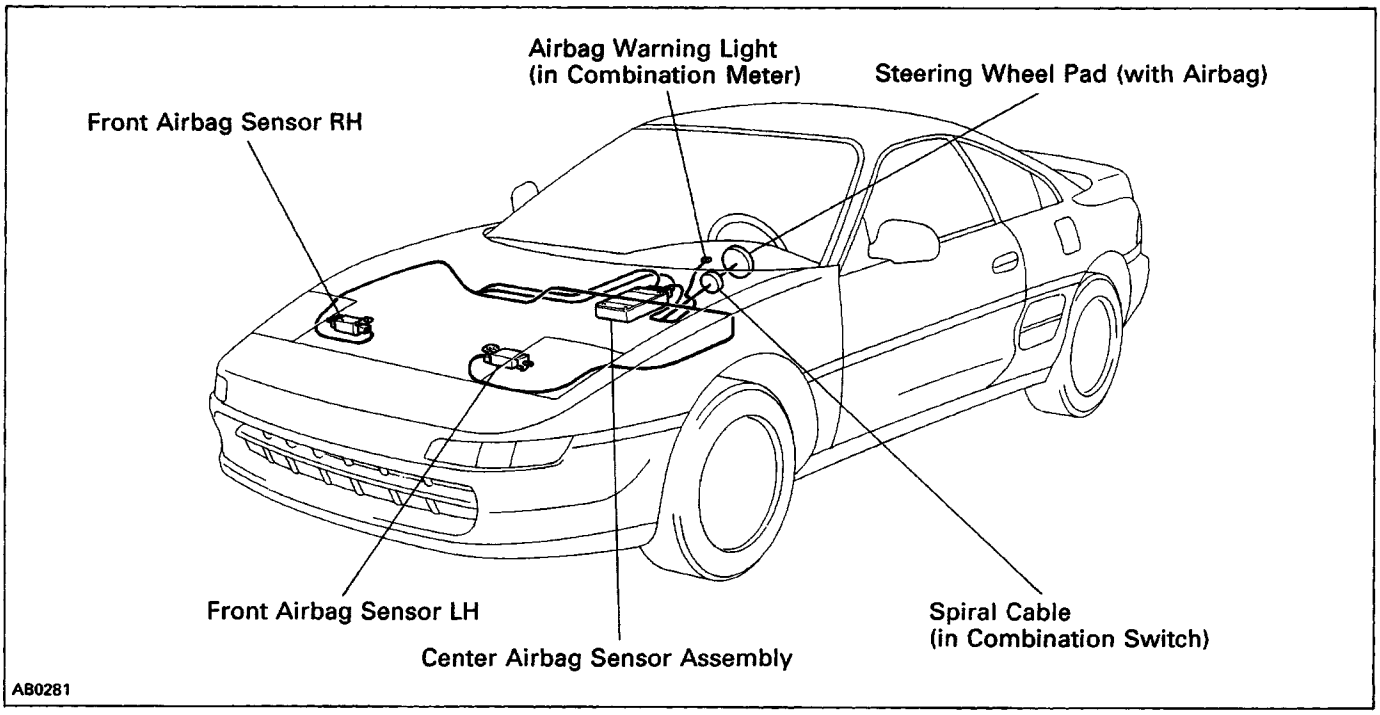

INSPECTION ITEMS

1. VEHICLES NOT INVOLVED IN A COLLISION

- Perform a diagnostic system check (See page AB–30).

2. VEHICLES INVOLVED IN A COLLISION

(a) Perform a diagnostic system check (See page AB–30).

(b) If there is a break in any of the wires in the airbag system wire harness, or if conductors are exposed.

(c) If the airbag system wire harness connectors are cracked or chipped.

REPLACEMENT REQUIREMENTS

In the following cases, replace the wire harness or connector.

- If any part of the airbag system wire harness or any connector has been found to be faulty in troubleshooting.
- If any part of the airbag system wire harness or any connector has been found to be faulty during the check in item **2.** – (b) or (c).

NOTICE: If the wire harness used in the airbag system is damaged. replace the whole wire harness assembly.

When the connector to the front airbag sensors can be repaired alone (when there is no damage to the wire harness), use the repair wire specially designed for the purpose (See page AB–22).

OPERATION

FUNCTION OF COMPONENTS

1. FRONT AIRBAG SENSOR

The front airbag sensors are mounted inside of the radiator upper support. The sensor unit is a mechanical type. When the sensor detects deceleration force above a predetermined limit in a collision, the contacts in the sensor make contact, sending a signal to the center airbag sensor assembly.
The sensor cannot be disassembled.

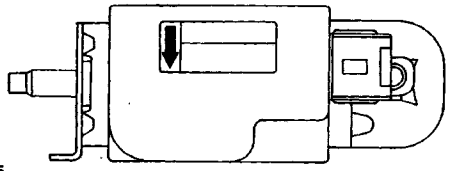

AB0255

2. SPIRAL CABLE (in COMBINATION SWITCH)

A spiral cable is used as an electrical joint from the vehicle body side to the steering wheel.

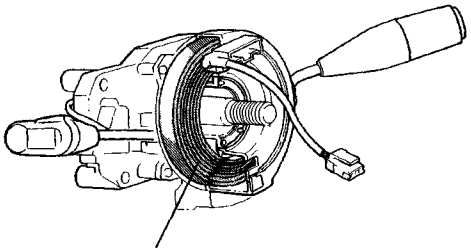

AB0258

3. STEERING WHEEL PAD (with AIRBAG)

The inflater and bag of the airbag system are stored in the steering wheel pad and cannot be disassembled. The inflater contains a squib, igniter charge, gas gener–ant, etc., and inflates the bag in case of a frontal collision.

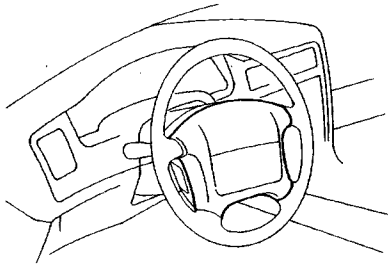

AB0259

4. AIRBAG WARNING LIGHT

The airbag warning light is located on the combination meter. It goes on to alert the driver of trouble in the system when a malfunction is detected in the center airbag sensor assembly self–diagnosis. In normal oper–ating condition when the ignition switch is turned to the ACC or ON position, the light goes on for about 6 seconds and then goes off.

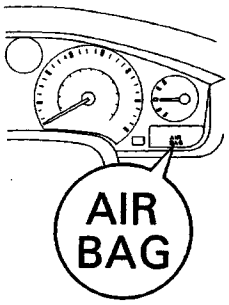

AB0260

5. CENTER AIRBAG SENSOR ASSEMBLY

The center airbag sensor assembly is mounted on the floor inside the center cluster. The center airbag sensor assembly consists of a center airbag sensor, safing sensors, ignition control and drive circuit, diagnosis circuit, etc. It receives signals from the airbag sensors, judges whether the airbag must be activated or not and diagnoses system malfunctions.

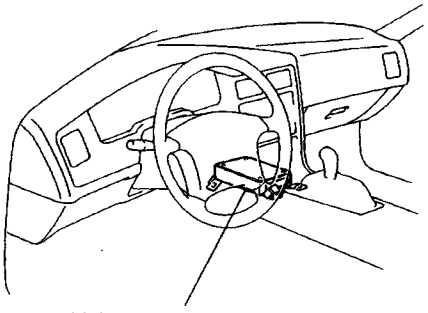

AB0261

6. AIRBAG CONNECTORS

All connectors in the airbag system are colored yellow. Connectors having special functions and specifically designed for airbags are used in the locations shown below to ensure high reliability. These connectors use durable gold–plated terminals.

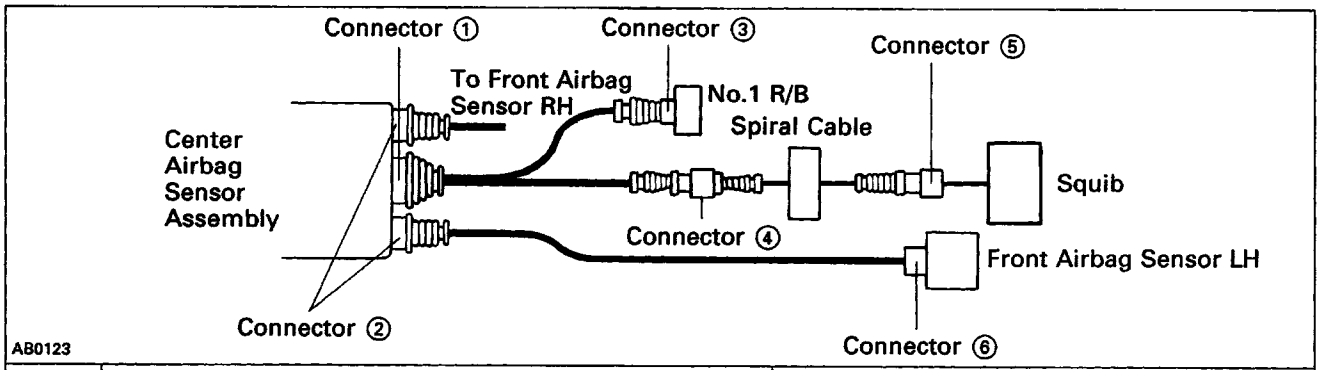

No.	Item	Application
(1)	Terminal Twin–Lock Mechanism	Connectors (1), (2), (3), (4), (5), (5),
(2)	Airbag Activation Prevention Mechanism	Connectors (1), (4), (5)
(3)	Electrical Connection Check Mechanism	Connectors (1), (2), (6)
(4)	Connector Twin–Lock Mechanism	Connectors (1), (5)

(1) Terminal Twin–Lock Mechanism

Each connector has a two–piece construction consisting of a housing and a spacer. This design secures the locking of the terminal by two locking devices (the spacer and the lance) to prevent terminals from coming out.

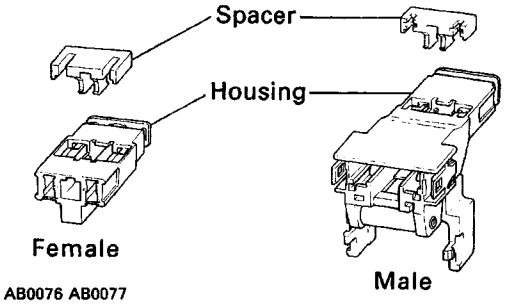

(2) Airbag Activation Prevention Mechanism

Each connector contains a short spring plate. When the connector is disconnected, the short spring plate automatically connects the power source and grounding terminals of the squib.

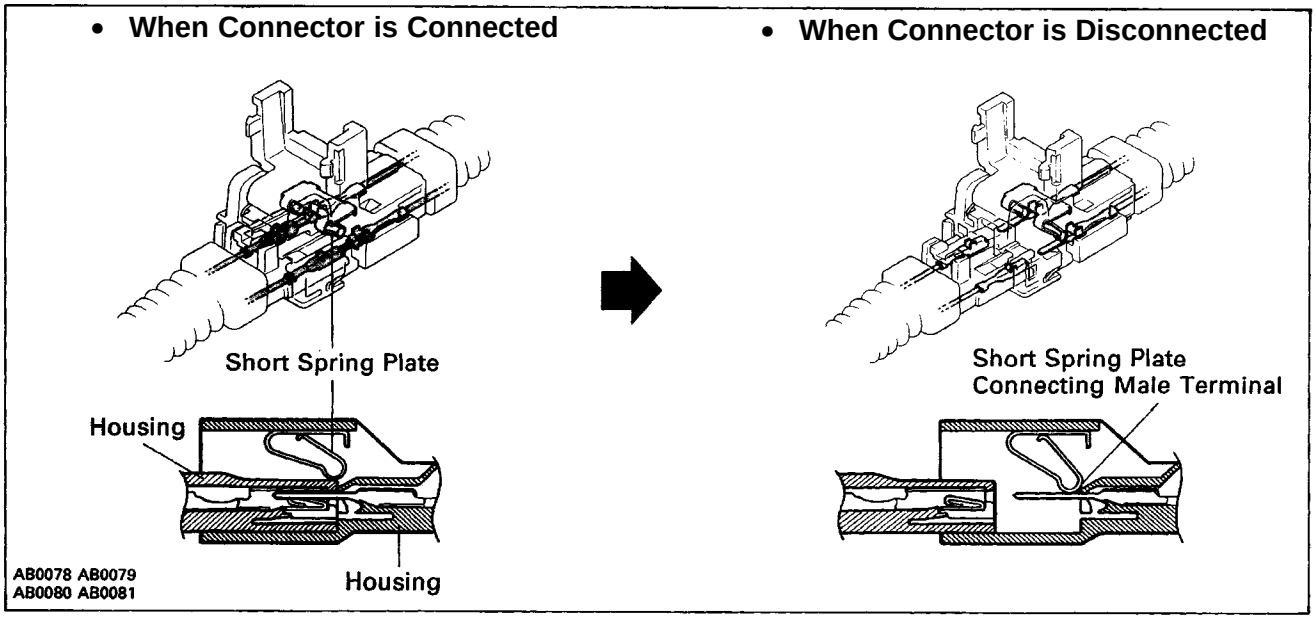

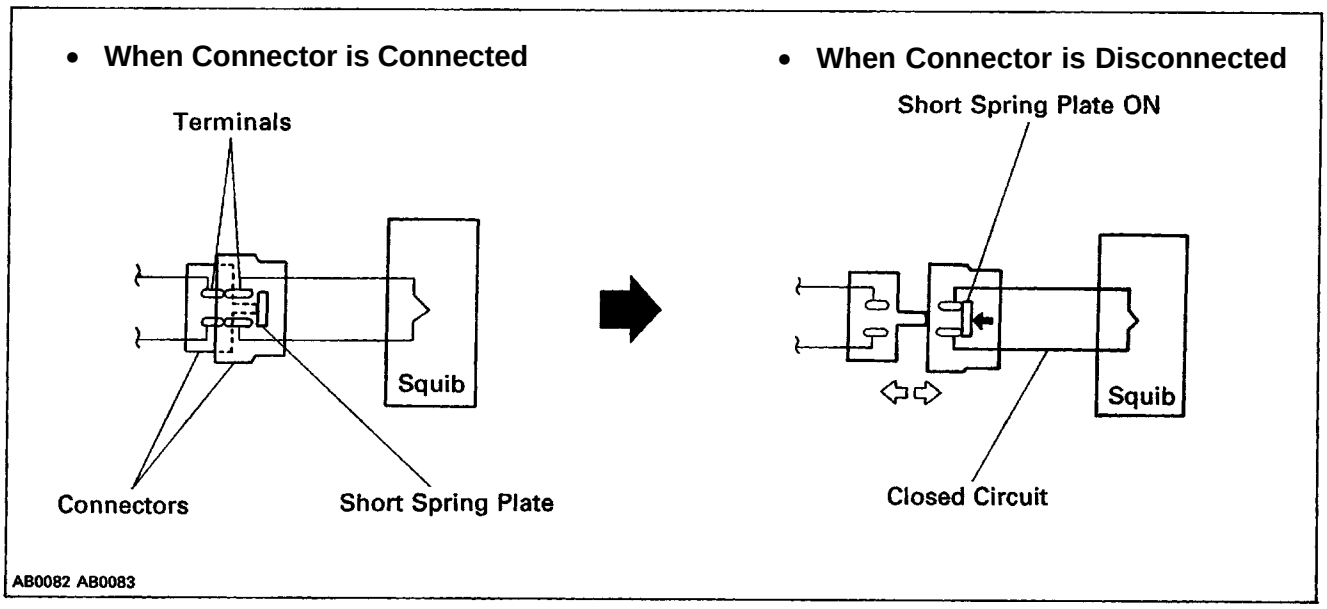

HINT: The illustration shows connectors (4) and (5). Connector (1) has a short spring plate on the female terminal side, but the operating principle is the same.

(3) Electrical Connection Check Mechanism

This mechanism is designed to electrically check if connectors are connected correctly and completely. The electrical connection check mechanism is designed so that the connection detection pin connects with the diagnosis terminals when the connector housing lock is in the locked condition.

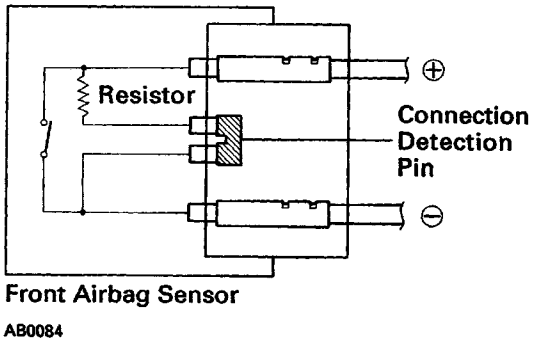

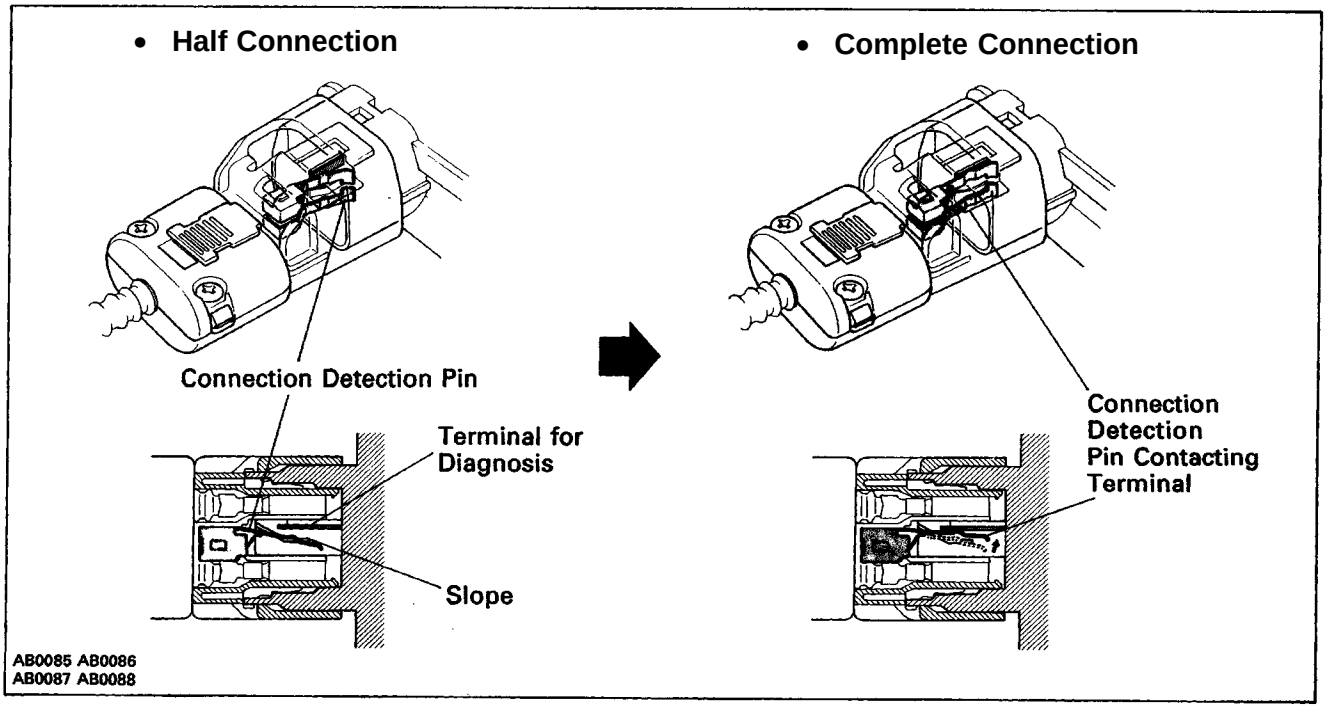

HINT: The illustration shows connector (6). Connectors (1) and (2) also have the same operating principle.

(4) Connector Twin–Lock Mechanism

With this mechanism connectors (male and female connectors) are locked by two locking devices to increase connection reliability.

If the primary lock is incomplete, ribs interfere and prevent the secondary lock.

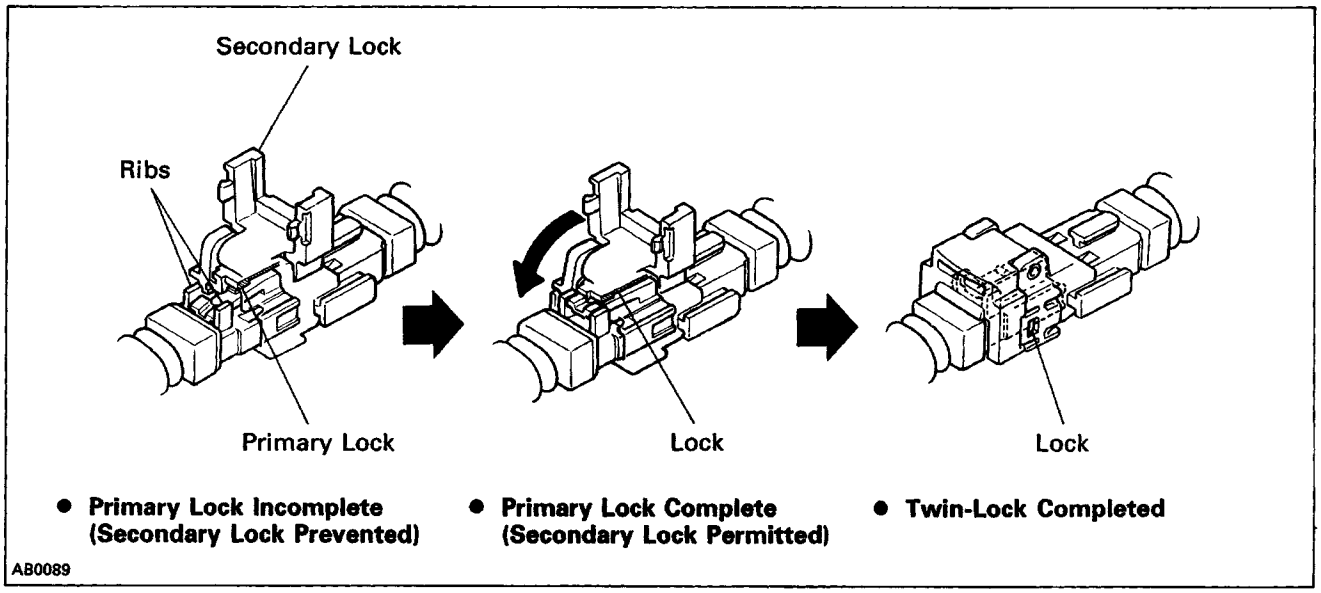

When the vehicle is involved in a frontal collision in the hatched area (Fig. 1) and the shock is larger than a predetermined level, the airbag is activated automatically. Safing sensors are designed to go on at a smaller deceleration rate than the front and center airbag sensors. As illustrated in Fig. 2 below, ignition is caused when current flows to the squib, which happens when a safing sensor and a front airbag sensor and/or the center airbag sensor go on simultaneously.

When a deceleration force acts on the sensors, it causes the squib to ignite. Gas is then generated, increasing the pressure inside the bag rapidly. The inflated bag breaks open the steering wheel pad. Bag inflation then ends, and the gas is discharged through discharge holes provided behind the bag. The bag becomes deflated as a result.

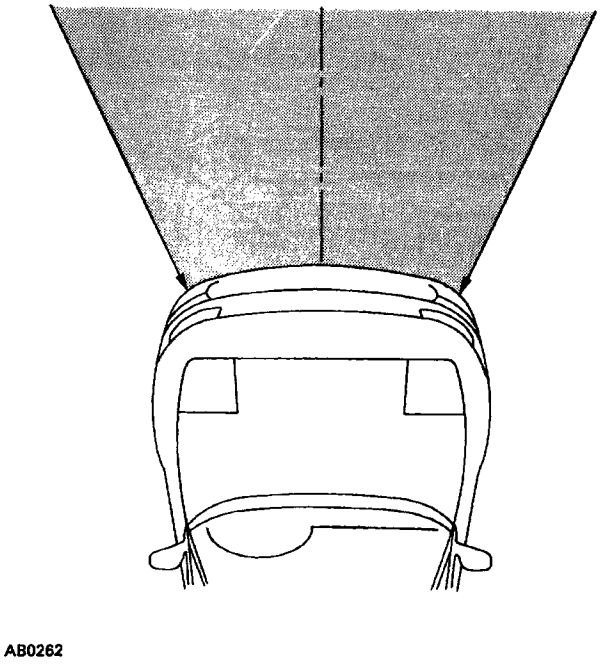

Fig. 1

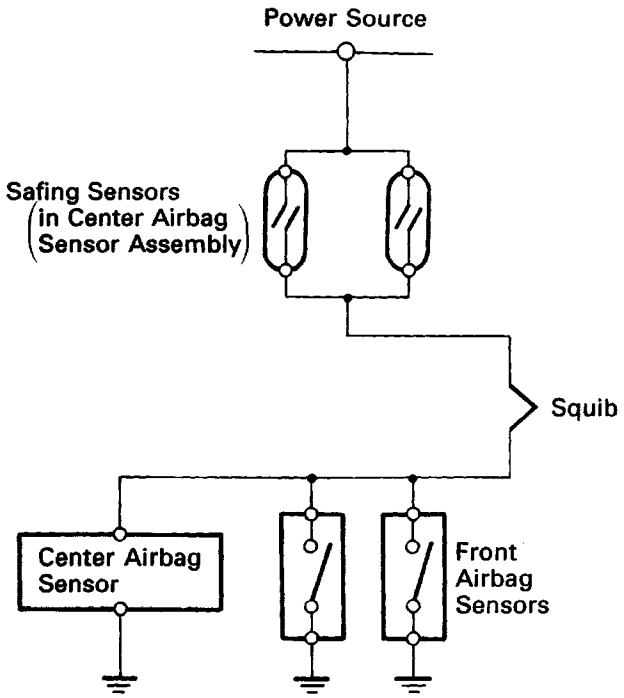

Fig. 2

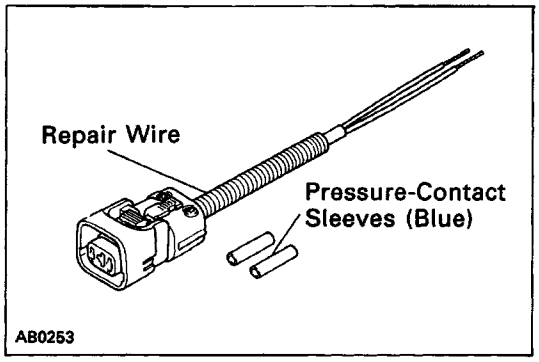

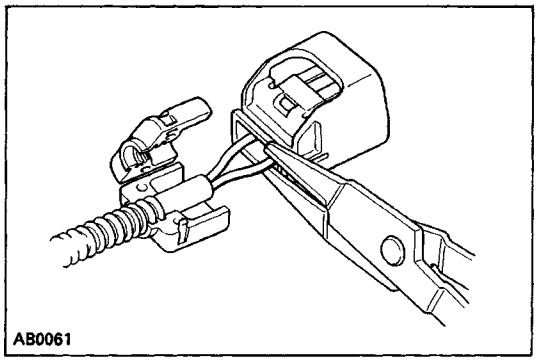

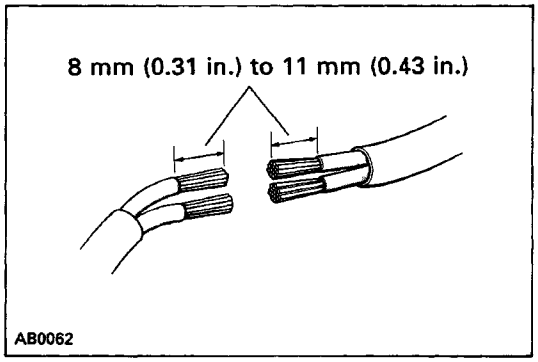

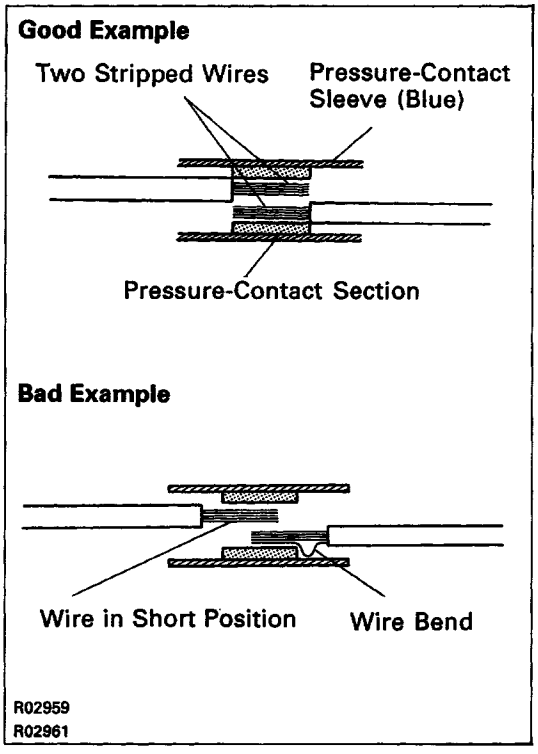

REPAIR WIRE FOR FRONT AIRBAG SENSOR REPLACEMENT

Repair wire with two pressure–contact sleeves (Part No. 82988–50010) has been prepared for exclusive use in repairing connector damage etc. caused by frontal collision of the vehicle.

When repairing the front airbag sensor connector on the wire harness side, always use the special repair wire.

NOTICE: Do not replace the connector housing or terminal only.

AIRBAG REPAIR WIRE REPLACEMENT

CAUTION: Work must be started after approx. 20 seconds or longer from the time the ignition switch is turned to the "LOCK" position and the negative (–) terminal cable is disconnected from the battery.

1. DISCONNECT WIRE HARNESS AT VEHICLE SIDE

(a) Remove the cover at the rear of the connector housing and expose the wire harness.

(b) Cut the wire harness behind the connector housing.

HINT: The operation is performed more easily if the wire harness is left as long as possible.

2. CONNECT FRONT AIRBAG SENSOR WIRE HARNESS AT VEHICLE SIDE AND REPAIR WIRE.

(a) Start stripping at least 8 mm (0.31 in.) to 11 mm (0.43 in.) away from the end of the existing harness at vehicle side and also from the end of the repair wire.

NOTICE: Take care not to damage the wire when stripping the wire harness lead. After finishing the operation, visually inspect the wire. If there is any damage, perform the operation again.

(b) Overlap the two stripped wire ends inside of the pressure–contact sleeve as illustrated on the left.

HINT: The blue pressure–contact sleeve (Part No. 82999–12020) is available as a solitary spare part.

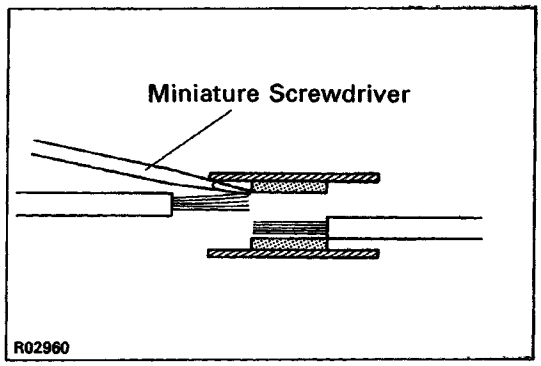

HINT: You might find it easier if you use a miniature screwdriver as a guide as you insert wires into the sleeve.

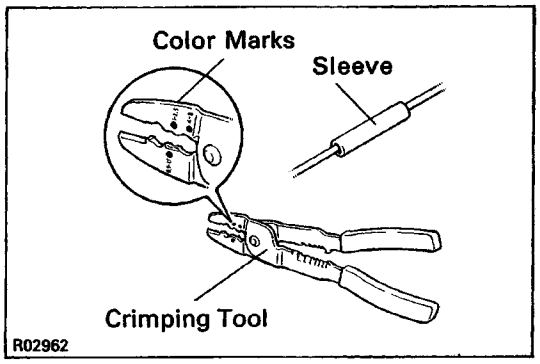

(c) The crimping tool (AMP Parts No. 169060) has color marks on it. Place the sleeve in the correct section of the tool according to the color of the sleeve itself.
HINT: As the crimping tool, AMP “Part No. 169060” is convenient to use.

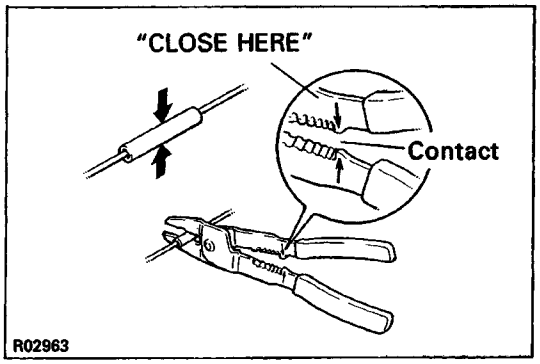

(d) With the center of the sleeve correctly placed between the crimping jaws, squeeze the crimping tool until either end comes into contact at the section marked by “CLOSE WERE”.
HINT: Check to see that the sleeve and wires are still in the correct position before closing the crimping tool ends with steady pressure.

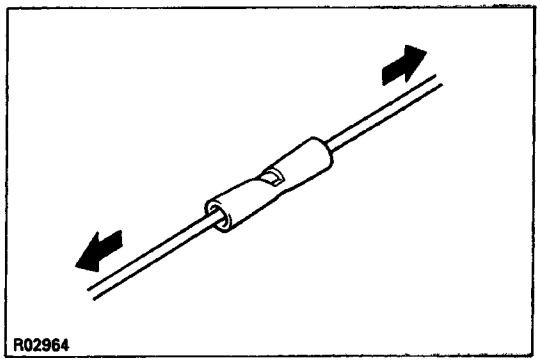

(e) pull the joined wires to either end. Make sure that they are joined firmly by the sleeve.
NOTICE: If the joined wires come loose the splice is defective, so replace the sleeve and repeat the proce–dure.

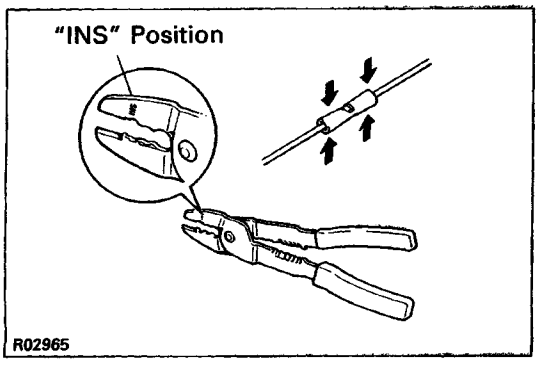

(f) Crimp both ends of the sleeve with the crimping tool at the “INS” position.

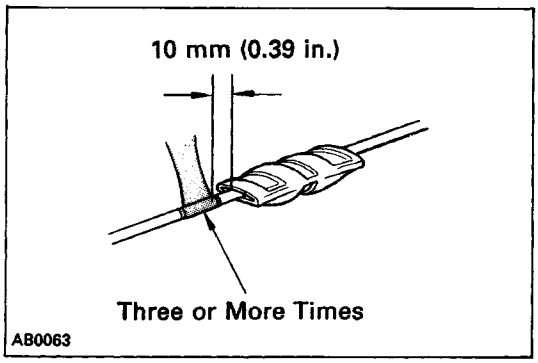

3. PROTECT JOINED SECTION

Wrap silicon tape around the joins to protect them from water.

HINT:

- Before starting the operation, thoroughly wipe dirt and grease off the section to be joined.
- If the adhesive surfaces of two tapes come in contact they will stick together and will not come apart, so do not remove the backing film except when using the tape.
- Do not let oil and dust, etc. get on the tape surface.

(a) Ready about 100 mm (3.94 in.) of silicon tape (Part No. 08231–00045) and peE1 off the film.
M Stretch the silicon tape until its width is reduced by half.

(c) About 10 mm (0.39 in.) from the end of the pressure–contact sleeve, wrap the silicon tape around the sleeve three or more times while stretching the tape.

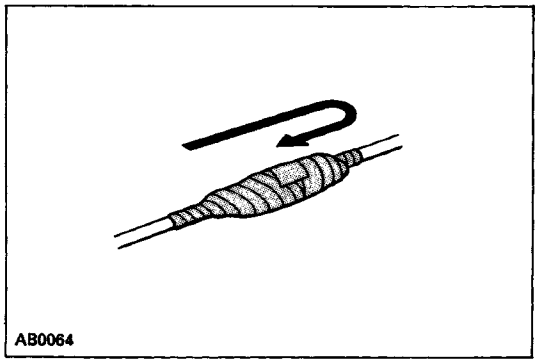

(d) Wrap the remaining part of sleeve with half of the tape overlapping at each turn.

(e) Firmly wrap the tape two times or more about 10 mm (0.39 in.) from the other end of the pressure–contact sleeve, then wrap the tape back towards the start again and firmly finish winding the tape around the center of the sleeve.

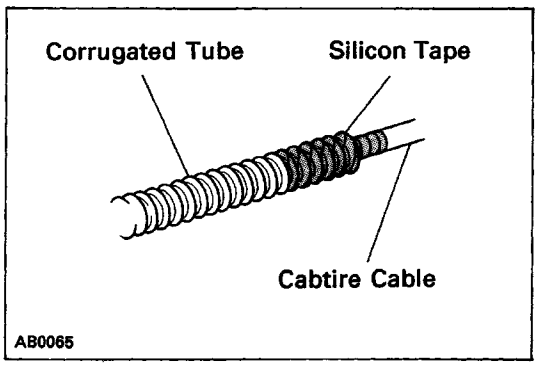

(f) Fix the corrugated tube to the cabtire cable using silicon tape.

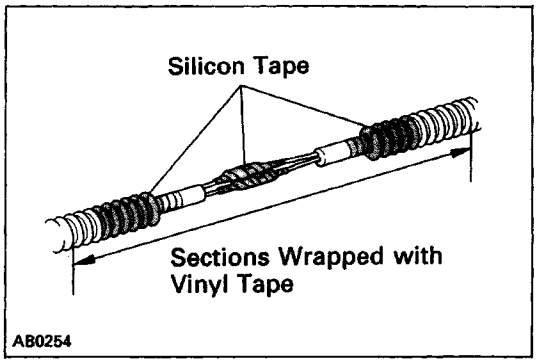

(g) After applying the silicon tape, apply vinyl tape –on the corrugated tube of repair wire side over to the corru–gated tube of vehicle wire harness side.

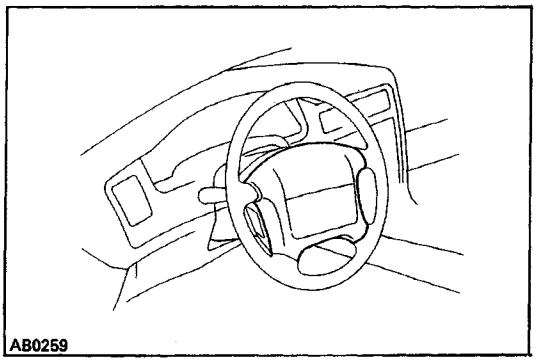

STEERING WHEEL PAD DISPOSAL (WITH AIRBAG)

When scrapping vehicles equipped with an airbag system or disposing of a steering wheel pad (with airbag), always first deploy the airbag in accordance with the procedure described below.

If any abnormality occurs with the airbag deployment, contact the SERVICE DEPT. of TOYOTA MOTOR SALES, U.S.A., INC.

Never dispose of a steering wheel pad which has an unde–ployed airbag.

When disposing of a steering wheel pad with an airbag de–ployed in a collision, follow the same procedure given under "AIRBAG DEPLOYMENT PROCEDURE (WHEN SCRAPPING THE VEHICLE), part 5, DISPOSAL OF STEERING WHEEL PAD (WITH AIRBAG)" (See page AB–85).

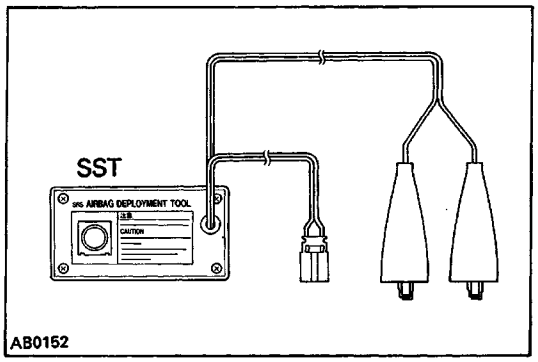

PRECAUTIONS FOR AIRBAG DEPLOYMENT

1. The airbag produces a sizeable exploding sound when it deploys, so perform the operation out–of–doors and where it will not create a nuisance to nearby residents.

2. When deploying the airbag, always use the specified SST: SRS AIRBAG DEPLOYMENT TOOL (SST 09082–00700). Perform the operation in a place away from electrical noise.

3. When deploying an airbag, perform the operation from at least 10 mm (33 ft) away from the steering wheel pad.

4. The steering wheel pad is very hot when the airbag is deployed, so leave it alone for at least 30 minutes after deployment.

5. Use gloves and safety glasses when handling a steer–ing wheel pad with deployed airbag.

6. Always wash your hands with water after completing the operation.

7. Do not apply water, etc. to a steering wheel pad with deployed airbag.

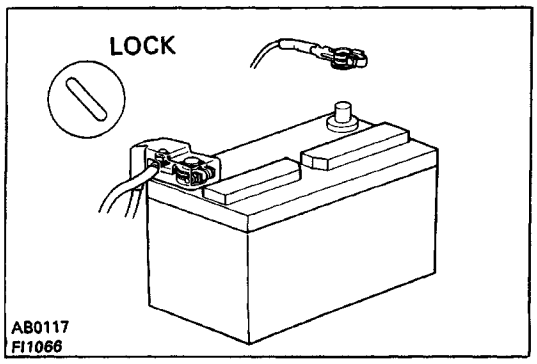

AIRBAG DEPLOYMENT PROCEDURE (WHEN SCRAPPING VEHICLE)

HINT: Have a battery ready as the power source to deploy the airbag.

1. DISCONNECT NEGATIVE (–) TERMINAL CABLE FROM BATTERY

CAUTION: Work must be started after approx. 20 seconds or longer from the time the ignition switch is turned to the LOCK position and the negative (–) terminal cable is disconnected from the battery (See page AB–2).

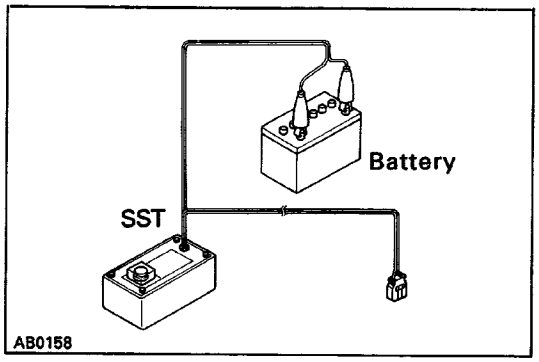

2. CONFIRM FUNCTIONING OF SST (SEE PAGE AB–89)

SST 09082–00700

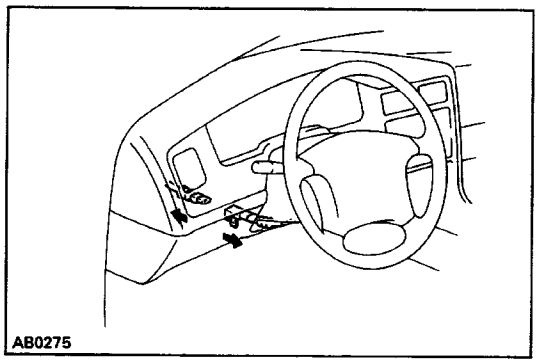

3. INSTALL SST

CAUTION: Check that there is no looseness in the steering wheel and steering wheel pad.

(a) Remove the instrument panel lower finish panel.

(b) Disconnect the airbag connector of the spiral cable.

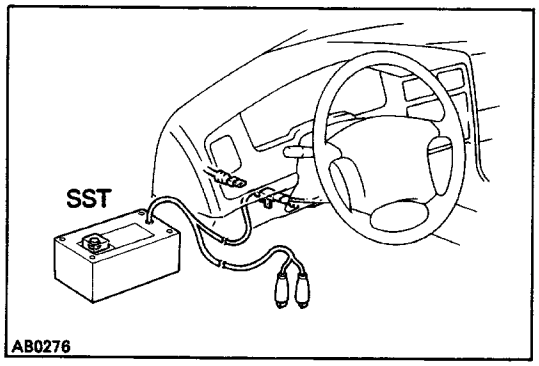

(c) Connect the SST connector to the airbag connector of the spiral cable.
SST 09082–00700

(d) Move the SST to at least 10 m t33 ft) from the front of the vehicle.

(e) Close all the doors and windows of the vehicle.

NOTICE: Take care not to damage the SST wire harness.

(f) Connect the SST red clip to the battery positive (+) terminal and the black clip to the battery negative (–) terminal.

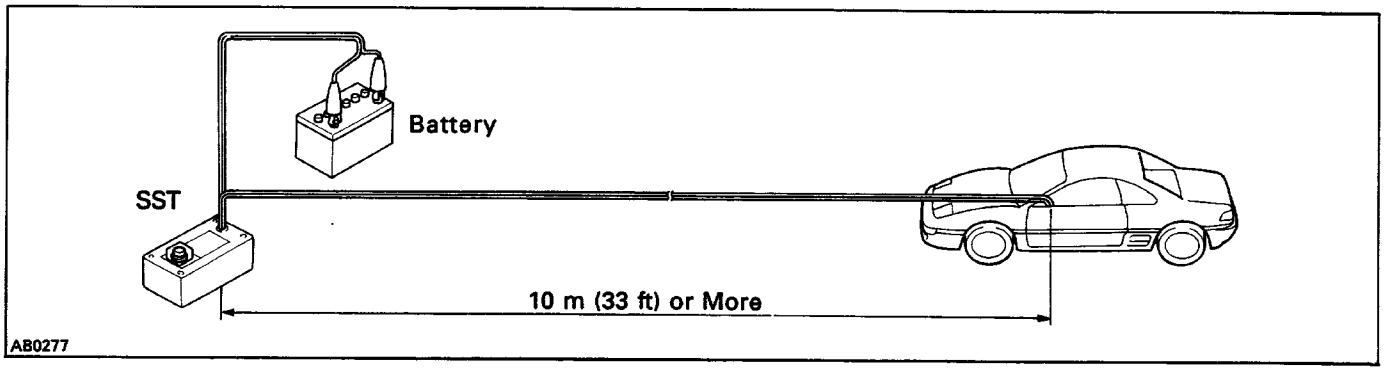

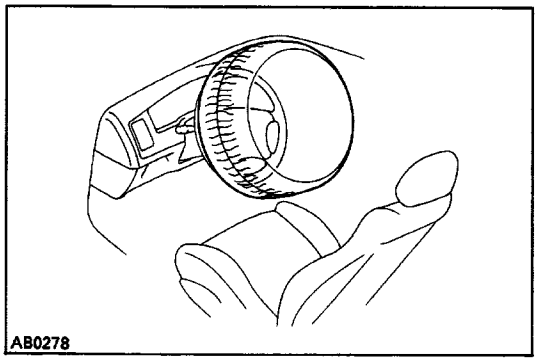

4. DEPLOY AIRBAG

(a) Confirm that no one is inside the vehicle or within 10 m (33 ft) of the vehicle.

(b) Press the SST activation switch and deploy the airbag.
HINT: The airbag deploys simultaneously as the LED of the SST activation switch lights up.

5. DISPOSAL OF STEERING WHEEL PAD (WITH AIRBAG)

CAUTION:

- **The steering wheel pad is very hot when the airbag is deployed, so leave it alone for at least 30 minutes after deployment.**
- **Use gloves and safety glasses when handling a steering wheel pad with deployed airbag.**
- **Do not apply water, etc. to a steering wheel pad with deployed airbag.**
- **Always wash your hands with water after complet–ing the operation.**

(a) When scrapping a vehicle, deploy the airbag and scrap the vehicle with the .steering wheel pad still installed.

(b) When moving a vehicle for scrapping which has a steering wheel pad with deployed airbag, use gloves and safety glasses.

AIRBAG DEPLOYMENT PROCEDURE (PROCEDURE FOR DISPOSAL OF STEERING WHEEL PAD ONLY)

When disposing of the steering wheel pad (with airbag) only, never use the customer's vehicle to deploy the airbag. Remove the steering wheel pad from the vehicle and be sure to follow the procedure given below when deploying the airbag.

HINT:

- Have a battery ready as the power source to deploy the airbag.

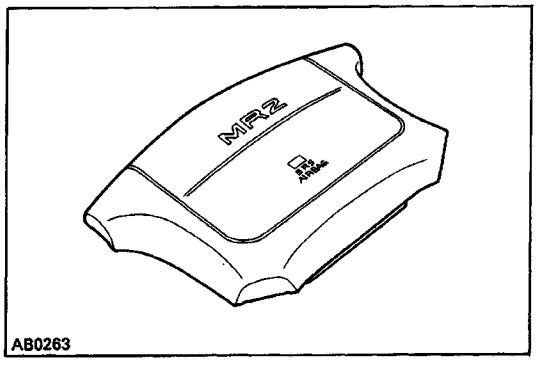

1. REMOVE STEERING WHEEL PAD (SEE PAGE AB–15)

CAUTION:

- **When removing the steering wheel pad (with airbag), work must be started after approx. 20 seconds or longer from the time the ignition switch is turned to the LOCK position and the negative (–) terminal cable is disconnected from the battery.**
- **When storing the steering wheel pad, keep the upper surface of the pad facing upward.**

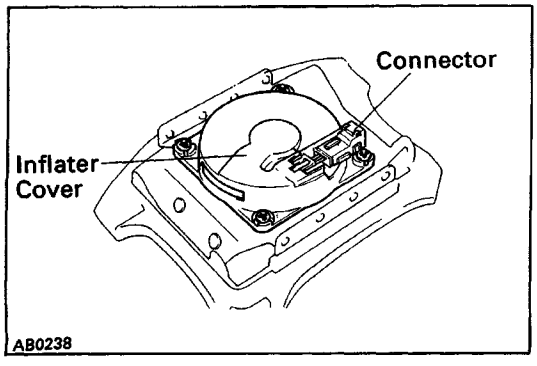

2. REMOVE STEERING WHEEL PAD CONNECTOR

Remove the connector on the steering wheel pad rear surface from the inflater cover.

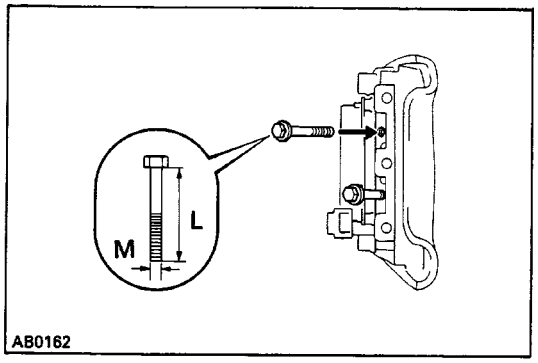

3. FIX STEERING WHEEL PAD TO DISC WHEEL WITH TIRE

(a) Install bolts with washers in the four bolt holes in the steering wheel pad.

Bolt: L 35.0 mm (1.378 in.)
M 6.0 mm
Pitch 1.0 mm

NOTICE: Tighten the bolts by hand until the bolts become difficult to turn.
Do not tighten the bolts too much.

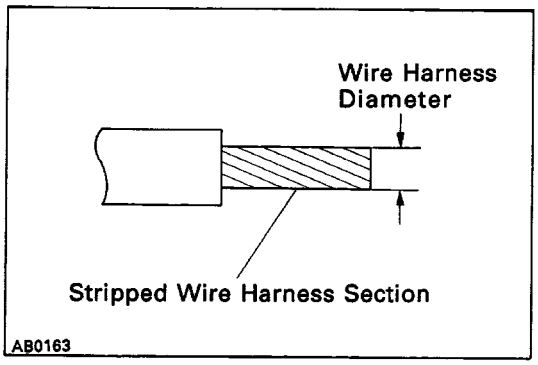

(b) Using a service–purpose wire harness for vehicle, tie down the steering wheel pad to the disc wheel.
Wire harness: Stripped wire harness section 1.25 mm2 or more (0.002 in.2 or more)

HINT: To calculate the square of the stripped wire harness section –

$$\text{Square} = \frac{3.14 \times (\text{Diameter})^2}{4}$$

CAUTION: If a wire harness which is too thin or some other thing is used to tie down the steering wheel pad, it may be snapped by the shock when the airbag is deployed, this is highly dangerous.
Always use a wire harness for vehicle use which is at least 1.25 mm^2 (0.002 in.^{2}).

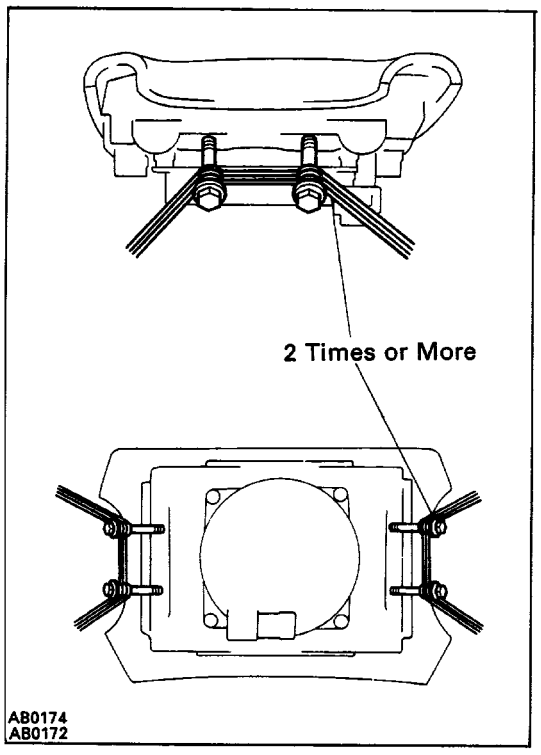

(1) Using 3 wire harnesses, wrap the wire harnesses at least 2 times each around the bolts installed on the left and right sides of the steering wheel pad.

CAUTION: Tightly wind the wire harness around the bolts so that there is no slack.
If there is slackness in the wire harness, the steering wheel pad may come loose due to the shock when the airbag is deployed, this is highly dangerous.

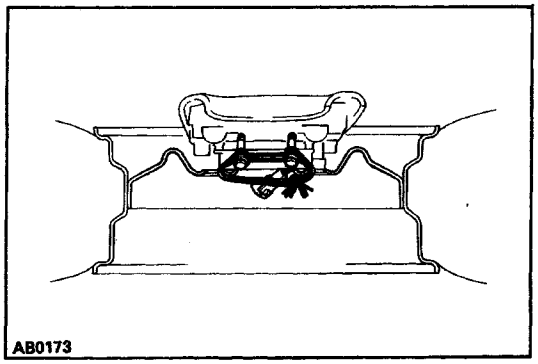

(2) Face the upper surface of the steering wheel pad upward. Separately tie the left and right sides of the steering wheel pad to the disc wheel through the hub nut holes.
Position the steering wheel pad connector so that it hangs downward through a hub hole in the disc wheel.
CAUTION:

- **Always tie down the steering wheel pad with the pad side facing upward. it is very dangerous if the steering wheel pad is tied down with the metal surface facing upward, as the wire harness will be cut by the shock of the airbag deploying and the steering wheel pad will be thrown into the air.**
- **Make sure that the wire harness is tight.**
  It is very dangerous if looseness in the wire harness results in the steering wheel pad coming free through the shock of the airbag deploying.

NOTICE: The disc wheel will be marked by airbag deployment, so use a redundant disc wheel.

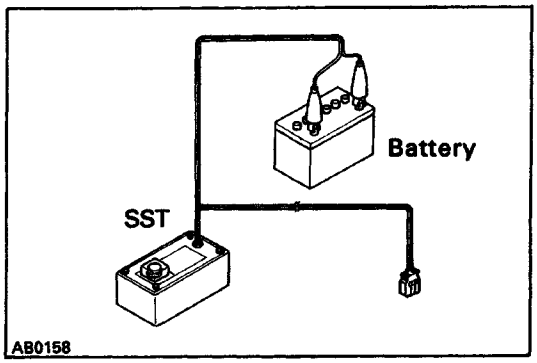

4. CONFIRM FUNCTIONING OF SST (SEE PAGE AB–89)
SST 09082–00700

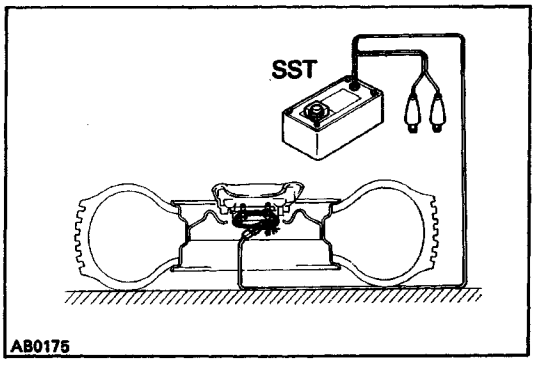

5. INSTALL SST
CAUTION: Place the disc wheel on level ground.
(a) Connect the SST connector to the steering wheel pad connector.
SST 09082–00700
NOTICE: To avoid damaging the SST connector and wire harness, do not lock the secondary lock of the twin lock. Also, provide some slack for the SST wire harness inside the disc wheel.
(b) Move the SST to at least 10 m (33 ft) away from the steering wheel pad tied down on the disc wheel.

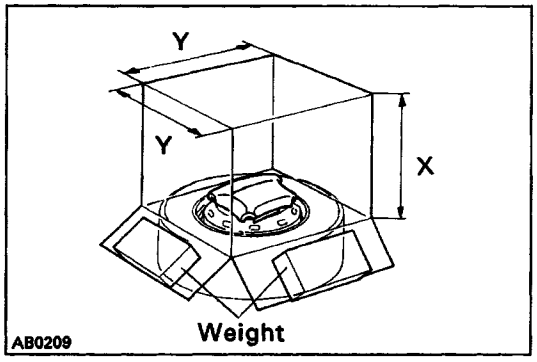

6. COVER STEERING WHEEL PAD WITH CARDBOARD BOX OR TIRES

(Covering Method Using Cardboard Boxy

Cover the steering wheel pad with the cardboard box and weigh the cardboard box down in four places with a at least 196 N (20 kgf, 44 lbf).

Size of cardboard box: Must exceed the following dimensions –

X = 460 mm (18.11 in.)

When dimension * of the cardboard box exceeds the diameter of the disc wheel with tire the steering wheel pad is tied to –

X = 460 mm t18.11 in.) + width of tire

Y = 650 mm (25.59 in.)

NOTICE: If a cardboard box smaller than the size specified is used, the cardboard box will be broken by the shock of the airbag deployment.

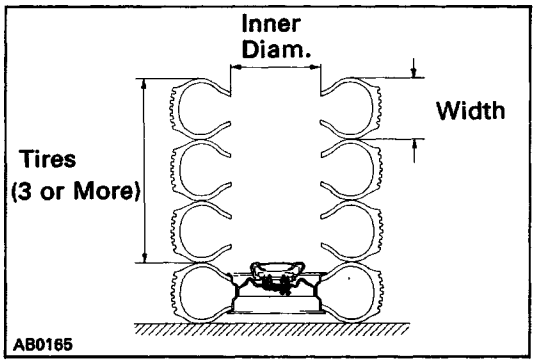

(Covering Method Using Tires)

Place at least three tires without disc wheel on top of the disc wheel with tire to which the steering wheel pad is tied.

Tire size: Must exceed the following dimensions –

Width 185 mm (7.28 in.)

Inner diam. 360 mm (14.17 in.)

CAUTION: Do not use tires with disc wheels.

NOTICE: The tires may be marked by the airbag de–ployment, so use redundant tires.

7. AIRBAG DEPLOYMENT

(a) Connect the SST red clip to the battery positive (+) terminal and the black clip to the battery negative (–) terminal.

(b) Confirm that no–one is within 10 m (33 ft) of the disc wheel the steering wheel pad is tied to.

(c) Press the SST activation switch and deploy the airbag.

HINT: The airbag deploys simultaneously at the LED of the SST activation switch lights up.

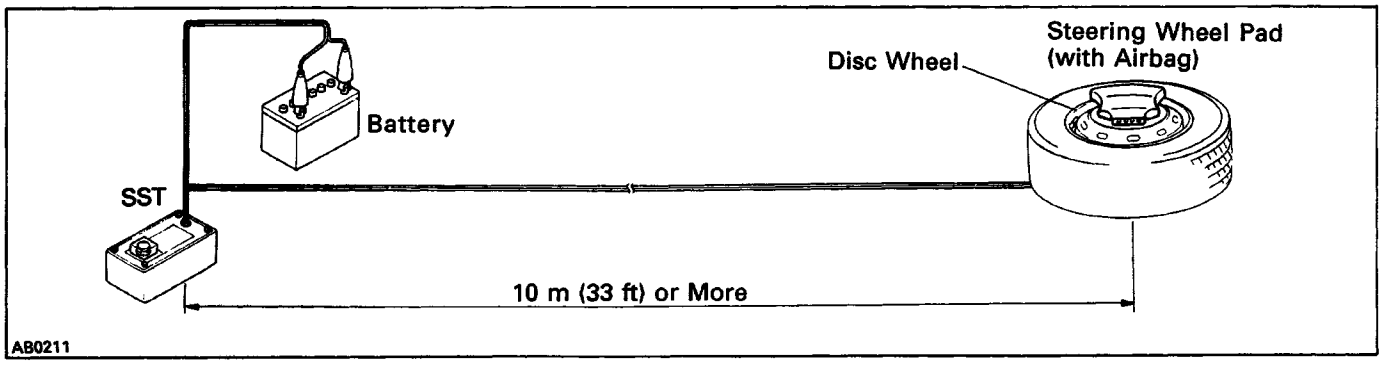

8. DISPOSAL OF STEERING WHEEL PAD (WITH AIRBAG)

CAUTION:

- **The steering wheel pad is very hot when the airbag is deployed, so leave it alone for at least 30 minutes after deployment.**
- **Use gloves and safety glasses when handling a steering wheel pad with deployed airbag.**
- **Do not apply water, etc. to a steering wheel pad with deployed airbag.**
- **Always wash your hands with water after complet–ing the operation.**

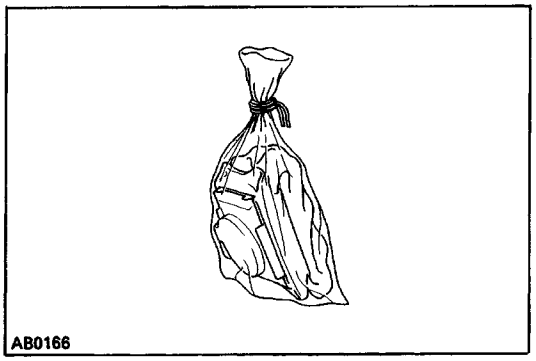
AB0166

(a) Remove the steering wheel pad from the disc wheel.
(b) Place the steering wheel pad in a vinyl bag, tie the end tightly and dispose of it the same way as other general parts.

CONFIRM FUNCTIONING OF SST

When deploying the airbag, always use the specified SST: SRS AIRBAG DEPLOYMENT TOOL.
SST 09082–00700

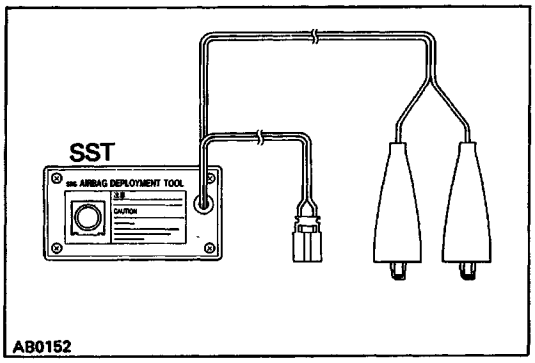

AB0152

1. CONNECT SST TO BATTERY .

Connect the red clip of the SST to the battery positive (+) terminal and the black clip to the battery negative¿–y terminal.

HINT: Do not connect the yellow connector which con–nects with the airbag system.

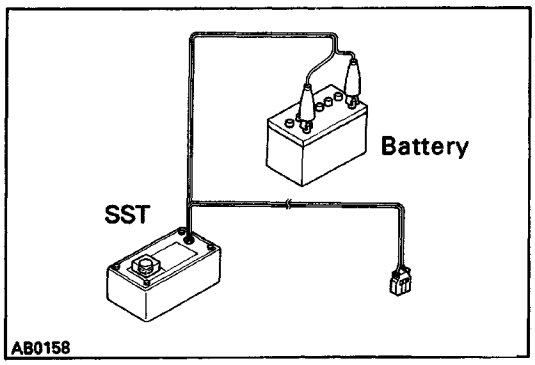

AB0158

2. CONFIRM FUNCTIONING OF SST

Press the SST activation switch, and confirm the LED of the SST activation switch lights up.

CAUTION: If the LED lights up when the activation switch is not being pressed, SST malfunction is proba–ble, so definitely do not use the SST.

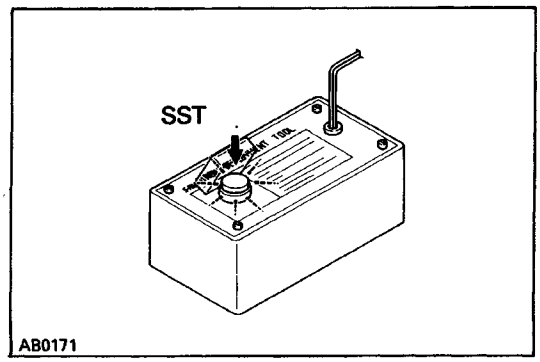

AB0171

Airbag Warning Light System (Always Lit Up)

CIRCUIT DESCRIPTION

The airbag warning light is located on the combination meter.
When the airbag system is normal, the airbag warning light lights up for approx. 6 seconds after the ignition switch is turned from LOCK position to ACC or ON position, and then turns off automatically.
If there is a malfunction in the airbag system, the airbag warning light lights up to inform the driver of the abnormality.
When terminals Tc and E_1 of the check connector are connected, the diagnostic code is displayed by the blinking of the airbag warning light.

DIAGNOSTIC CHART

1 Does airbag warning light turn off?

NO → Check airbag warning light circuit or terminal AB circuit of check connector.

YES ↓

Replace center airbag sensor assembly.

WIRING DIAGRAM

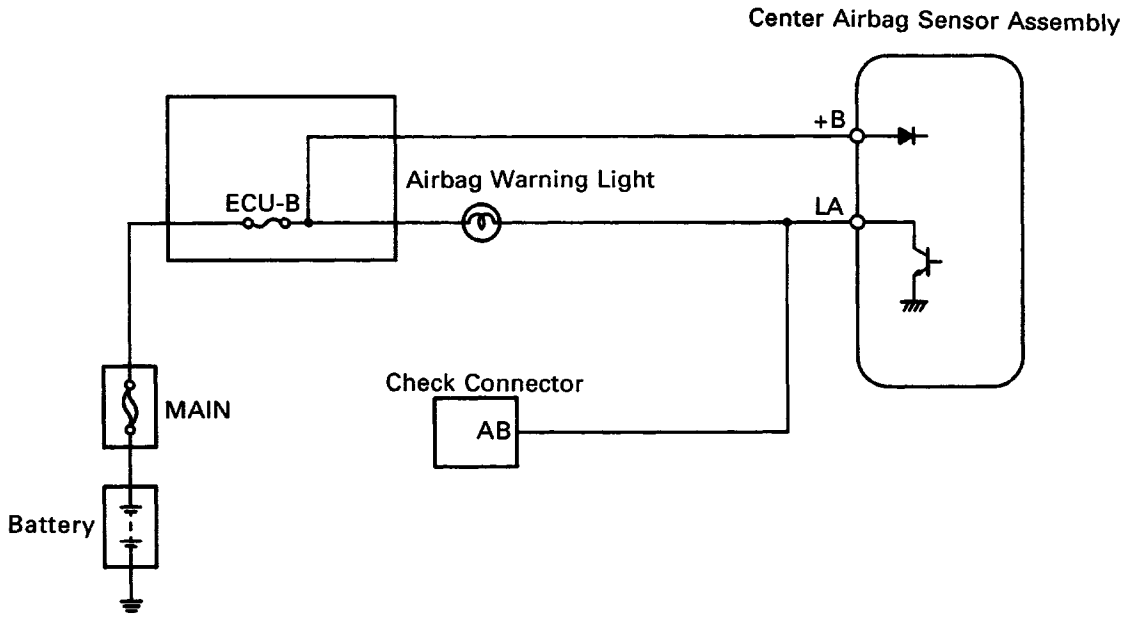

AB0240

INSPECTION PROCEDURES

P Preparation C Check

1 Does airbag warning light turn off?



Center Airbag Sensor Assembly

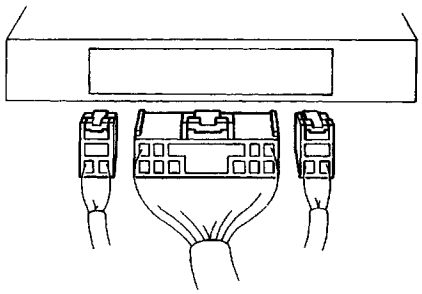

AB0117
AB0092

P (1) Turn ignition switch LOCK.
(2) Disconnect negative (–) terminal cable from battery.
(3) Disconnect center airbag sensor assembly connector.
(4) Connect negative (–) terminal cable to battery.

C Check operation of airbag warning light.

YES

Replace center airbag sensor assembly.

NO

Check airbag warning light circuit or terminal AB circuit of check connector.

Customer Problem Analysis Check Sheet

SRS AIRBAG System Check Sheet

Inspector's Name

Customer's Name		Registration No.	
		Registration Year	/ /
		Frame No.	
Date Vehicle Brought In	/ /	Odometer Reading	Miles

Date of Problem Occurrence		/ /
Conditions at Time of Problem Occurrence	Weather	☐ Fine ☐ Cloudy ☐ Rainy ☐ Snowy ☐ Various/Other
	Outdoor Temperature	☐ Hot ☐ Warm ☐ Cool ☐ Cold (Approx. °C (°F))
	Vehicle Operation	☐ Starting ☐ Idling ☐ Driving [☐ Constant speed ☐ Acceleration ☐ Deceleration ☐ Other ( )]
	Condition of road	

Details of Problem	
Vehicle Inspection, Repair History Prior to Occurrence of Malfunction (Including Airbag System	

(Diagnosis System Inspection)

Airbag Warning Light Inspection	1st Time	☐ Remains On ☐ Sometimes Lights Up ☐ Does Not Light Up
	2nd Time	☐ Remains On ☐ Sometimes Lights Up ☐ Does Not Light Up
Diagnostic Code Inspection	1st Time	☐ Normal Code ☐ Malfunction Code [Code.]
	2nd Time	☐ Normal Code ☐ Malfunction Code [Code.]

Diag. Code 11 Short in Squib Circuit or Front Airbag sensor Circuit (to Ground)

CIRCUIT DESCRIPTION

The squib circuit consists of the center airbag sensor assembly, spiral cable and the steering wheel pad (squib). It causes the airbag to deploy when the airbag deployment conditions are satisfied.
The front airbag sensor detects the deceleration force in a frontal collision and is located in the radiator upper support.
For details of the function of each component, see FUNCTION OF COMPONENTS on page AB–7.
Diagnostic code 11 is recorded when occurrence of ground short is detected in the squib circuit or front airbag sensor circuit. If the malfunctioning part can not be detected by following the diagnostic chart, replace all airbag components including the wire harness.

Code No.	Diagnosis
11	• Short circuit in squib wire harness (to ground). • Squib malfunction. • Short circuit in front airbag sensor +S wire harness (to ground). • Front airbag sensor malfunction. • Short circuit between +S wire harness and –S wire harness of front airbag sensor. • Spiral cable malfunction. • Center airbag sensor assembly malfunction.

DIAGNOSTIC CHART

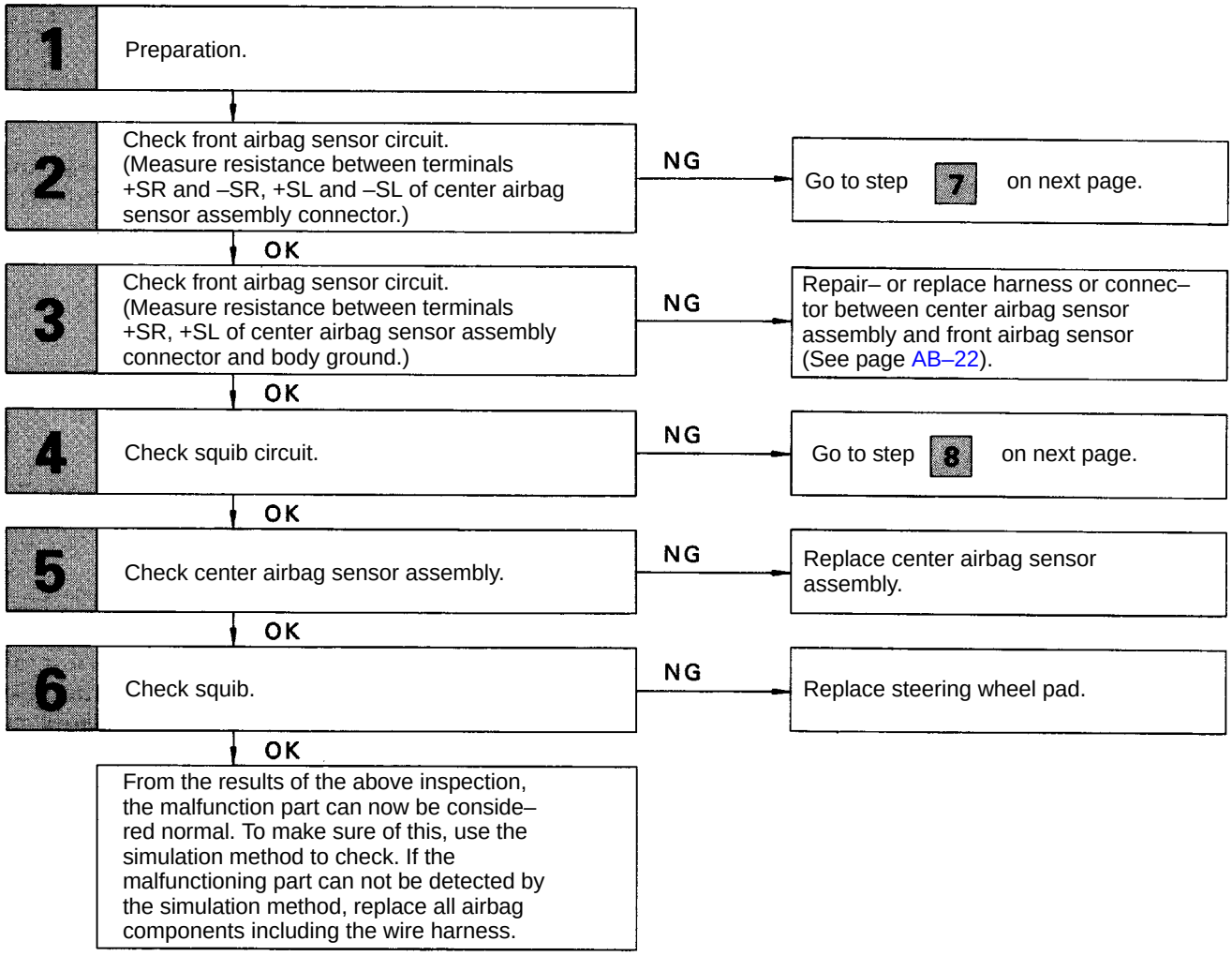

DIAGNOSTIC CHART (Cont'd)

7 Check front airbag sensor.
- NG → Replace front airbag sensor.
- OK → Repair or replace harness or connector between center airbag sensor assembly and front airbag sensor (See page AB–22).

8 Check spiral cable.
- NG → Repair or replace spiral cable.
- OK → Repair or replace harness or connector between center airbag sensor assembly and spiral cable.

WIRING DIAGRAM

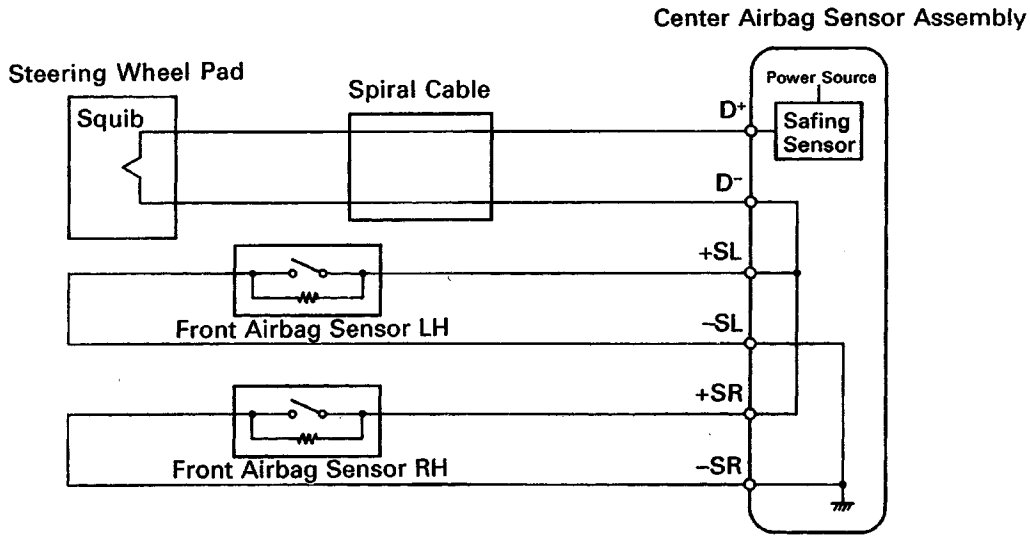

AB0190

INSPECTION PROCEDURES

P Preparation C Check

1 Preparation.

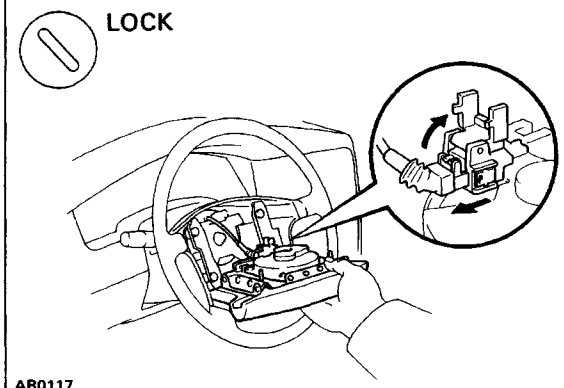

AB0117
AB0267

P (1) Disconnect battery negative (–) terminal cable, and wait at least 20 seconds.
(2) Remove steering wheel pad (See page AB–15).

Caution
When storing steering wheel pad, keep upper surface of other pad facing upward.

2 Check front airbag sensor circuit. (Measure resistance between terminals +SR and –SR, +SL and –SL of center airbag sensor assembly connector.)

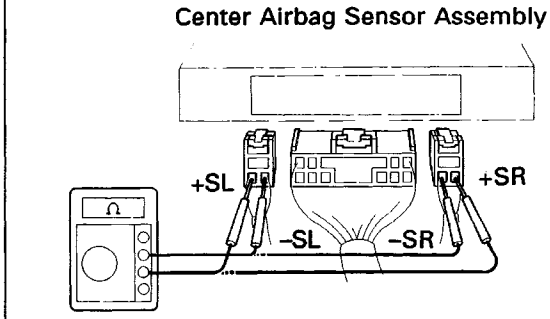

AB0097

P Disconnect center airbag sensor assembly connectors.

C Measure resistance between terminals +SR and –SR, +SL and –SL of harness side connector of center airbag sensor assembly.

OK **Resistance: 755Ω – 885Ω**

OK

NG **Go to Step 7.**

3 Check front airbag sensor circuit (Measure –resistance between terminals +SR, +SL of center airbag sensor assembly connector and body ground.)

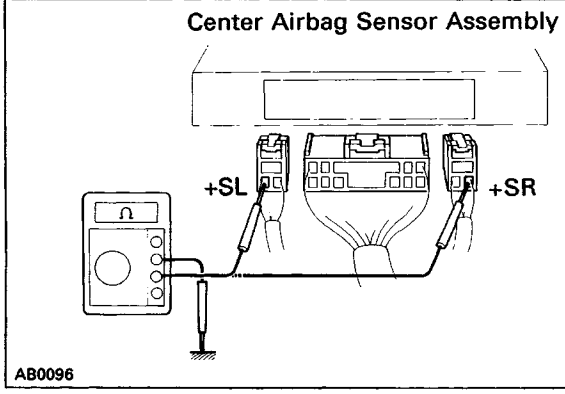

AB0096

C Measure resistance between terminals +SR, +SL of harness side connector of center airbag sensor assembly.

OK **Resistance: ∞ Ω**

OK

NG **Repair or replace harness or connector between center airbag sensor assembly and front airbag sensor (See page AB–22).**

4 Check squib circuit.

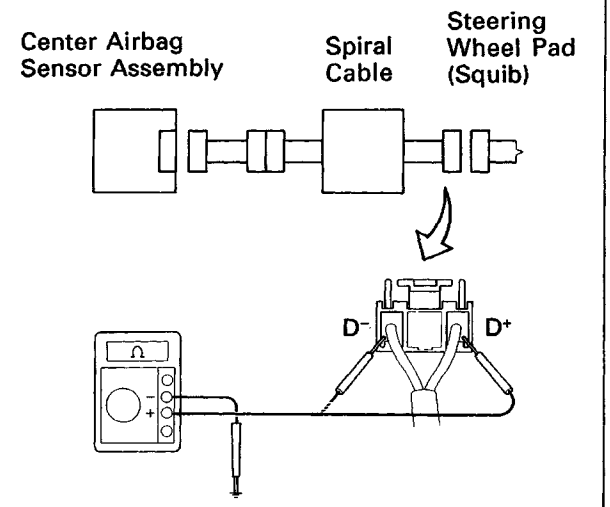

AB0072
AB0070

P Measure resistance between D+, D– on spiral cable side of connector between spiral cable and steering wheel pad and body ground.

OK **Resistance:** ∞ Ω

OK

NG → **Go to Step 8.**

3 Check center airbag sensor assembly.

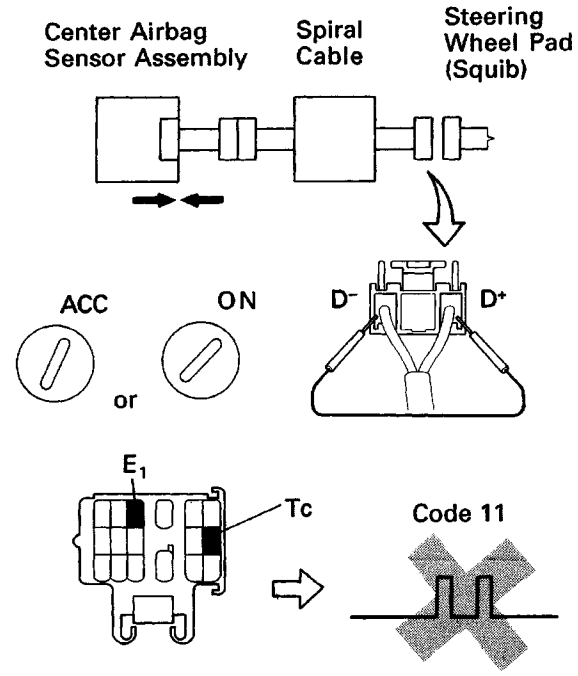

AB0074
AB0069
AB0118 AB0119
SH-18-1 AB0057

P (1) Connect connectors to center airbag sensor assembly.
(2) Using a service wire, connect D+ and D– on spiral cable side of connector between spiral cable and steering wheel pad.
(3) Connect negative H terminal cable to battery, and wait at least 2 seconds.

C (1) Turn ignition switch ACC or ON and wait at least 20 seconds.
(2) Using SST, connect terminals Tc and E1 of check connector.
SST 09843–18020
(3) Check diagnostic code.

OK **Diagnostic code 11 is not output.**

Hint Codes other than code 11 may be output at this time, but this is not relevant to this check.

OK

NG → **Replace center airbag sensor assembly.**

6 Check Squib.

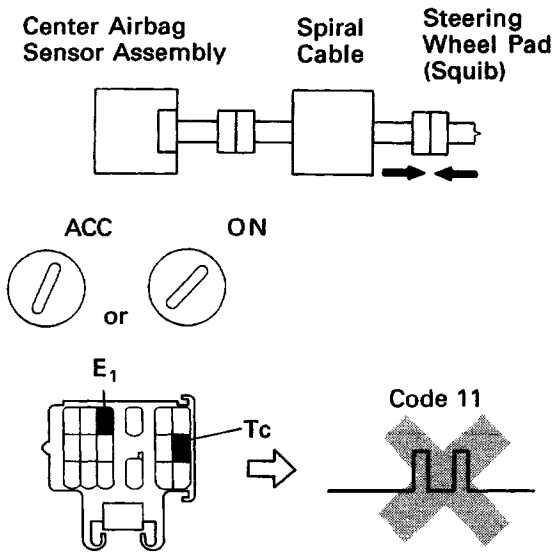

AB0075
AB0118 AB0119
SH-18-1 AB0057

P (1) Turn ignition switch LOCK.
(2) Disconnect battery negative (–) terminal cable, and wait at least 20 seconds.
(3) Connect steering wheel pad (squib) connector.
(4) Connect negative H terminal cable to battery, and wait at least 2 seconds.

C (1) Turn ignition switch ACC or ON, and wait at least 20 seconds.
(2) Using SST, connect terminals Tc and E1 of check connector.
SST 09843–18020
(3) Check diagnostic code.

OK **Diagnostic code 11 is not output.**

Hint Codes other than code 11 may be output at this time, but this is not relevant to this check.

OK

NG → **Replace steering wheel pad.**

From the results of the above inspection, the malfunctioning part can now be considered normal. To make sure of this, use the simulation method to check. If the malfunctioning part can not be detected by the simulation method, replace all airbag components including the wire harness.

7 Check front airbag sensor.

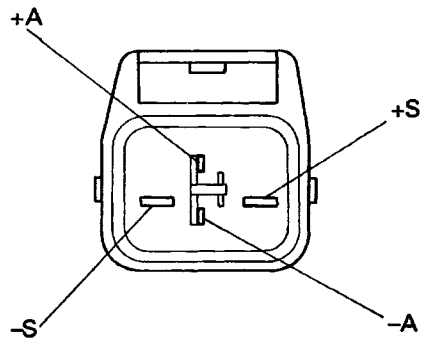

AB0034

P Disconnect front airbag sensor connector.

C Measure resistance between each terminal of front airbag sensor.

OK

Terminal	Resistance
(+) S– (+) A	755Ω – 885Ω
(+) S– (–) S	∞
(–) S– (–) A	Less than 1Ω

Notice

- **Do not touch ohmmeter probes strongly against terminals of front airbag sensor.**
- **Make sure the front airbag sensor connector is properly connected.**

OK

NG → **Replace front airbag sensor.**

Repair or replace harness or connector between center airbag sensor assembly and front airbag sensor (See page AB–22).

8 **Check spiral cable.**

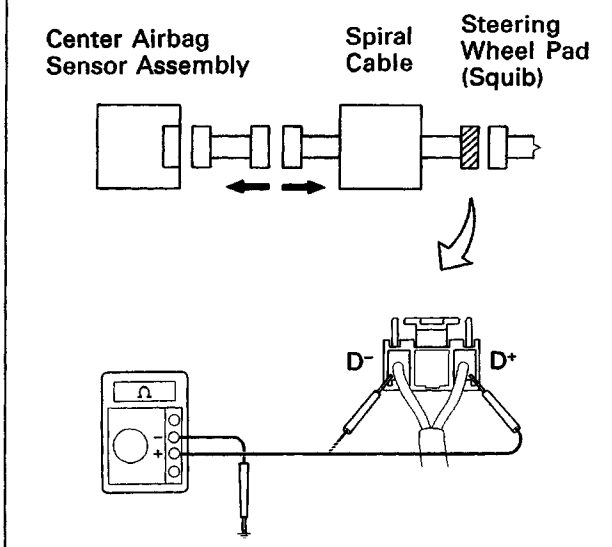

AB0071
AB0070

P Disconnect connector between center airbag sensor assembly and spiral cable.

C Measure resistance between D+, D– on spiral cable side of connector between spiral cable and steering wheel pad and body ground.

OK **Resistance: ∞ Ω**

OK

NG **Repair or replace spiral cable.**

Repair or replace harness or connector between center airbag sensor assembly and spiral cable.

Diag. Code 13 Short in Squib Circuit (Between D+ Wire Harness and D– Wire Harness)

CIRCUIT DESCRIPTION

The squib circuit consists of the center airbag sensor assembly, spiral cable and the steering wheel pad (squib). It causes the airbag to deploy when the airbag deployment conditions are satisfied.
For details of the function of each component, see FUNCTION OF COMPONENTS on page AB–7.
Diagnostic code 13 is recorded when a short is detected in the D+ wire harness and D– wire harness of the squib circuit.

Code No.	Diagnosis
13	• Short circuit between D+ wire harness and D– wire harness of squib. • Squib malfunction. • Spiral cable malfunction. • Center airbag sensor assembly malfunction.

DIAGNOSTIC CHART

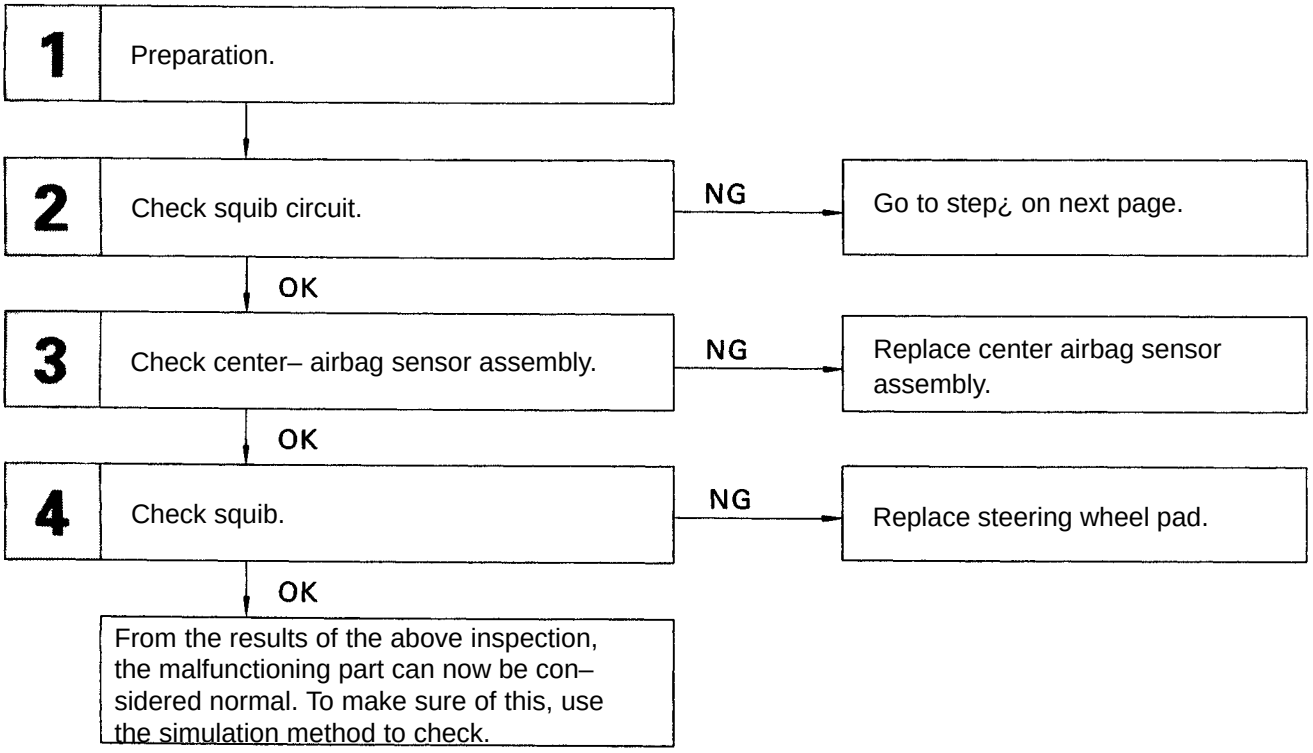

DIAGNOSTIC CHART (Cont'd)

5	Check spiral cable.	NG	Repair or replace spiral cable.
OK			
6	Check harness between center airbag sensor assembly and spiral cable.	NG	Repair or replace harness or connector between center air–bag sensor assembly and spiral cable.
OK			
7	Check center airbag sensor assembly.	NG	Replace center– airbag sensor assembly.
OK			
From the results of the above inspection, the malfunctioning part can now be con–sidered normal. To make sure of this, use the simulation method to check.			

WIRING DIAGRAM

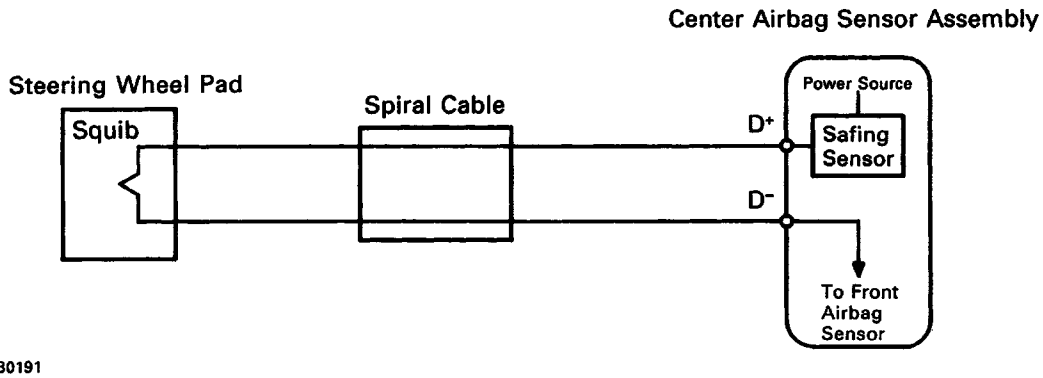

INSPECTION PROCEDURES

P Preparation C Check

1 Preparation.



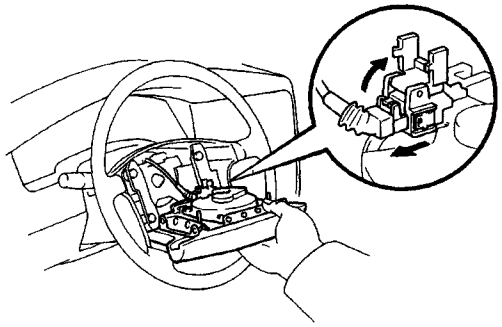

AB0117
AB0267

P (1) Disconnect battery negative (–) terminal cable, and wait at least 20 seconds.
(2) Remove steering wheel pad See page AB–15

Caution

When storing steering wheel pad, keep upper surface of other pad facing upward.

2 Check squib circuit.

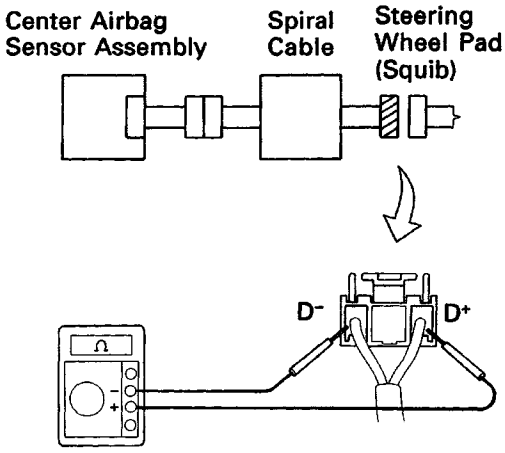

AB0074
AB0068

P Measure resistance between D+ and D– on spiral cable side of connector between spiral cable and steering wheel pad.

OK **Resistance: 1 kΩ or more**

OK

NG Go to Step 5.

3 Check center airbag sensor assembly.

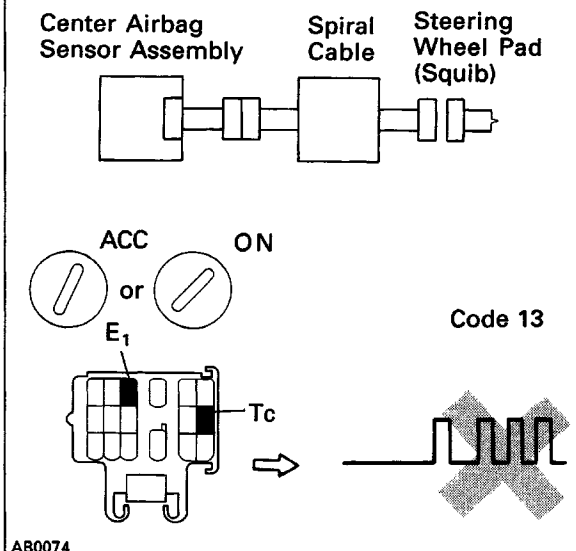

P (1) Connect negative (–) terminal cable to battery.
(2) Clear malfunction code 41 stored in memory (See page AB–32).

C (1) Turn ignition switch LOCK, and wait at least 2 seconds.
(2) Turn ignition switch ACC or ON, and wait at least 20 seconds.
(3) Using SST, connector terminals Tc and E1 of check connector.
SST 09843–18020
(4) Check diagnostic code.

OK **Diagnostic code 13 is not output.**

Hint Codes other than code 13 may be output at this time, but this is not relevant to this check.

OK

NG **Replace center airbag sensor assembly.**

4 Check squib.

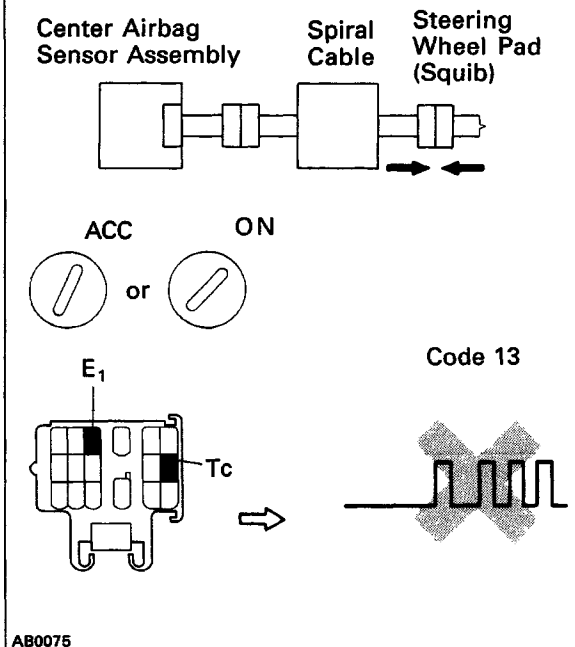

P (1) Turn ignition switch LOCK.
(2) Disconnect battery negative (–) terminal cable, and wait at least 20 seconds.
(3) Connect steering wheel pad (squib) connector.
(4) Clear malfunction code 41 stored in memory (See page AB–32).

C (1) Turn ignition switch LOCK, and wait at least 2 seconds.
(2) Turn ignition switch ACC or ON, and wait at least 20 seconds.
(3) Using SST, connect terminals Tc and E1 of check connector.
SST 09843–18020
(4) Check diagnostic code.

OK **Diagnostic code 13 is not output.**

Hint Codes other than code 13 may be output at this time, but this is not relevant to this check.

OK

NG **Replace steering wheel pad.**

From the results of the above inspection, the malfunctioning part can now be considered normal. To make sure of this, use the simulation method to check.

5 Check spiral cable.

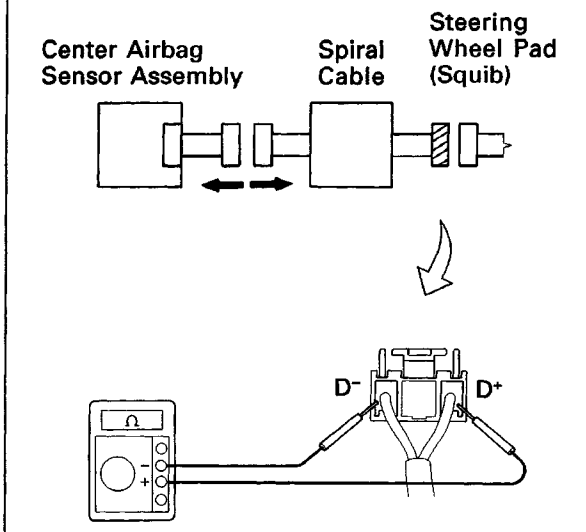

AB0073
AB0068

P (1) Disconnect connector between center airbag sensor assembly and spiral cable.
(2) Release airbag activation prevention mechanism on center airbag sensor assembly side of spiral cable connector (See page AB–55).

C Measure resistance between D+ and D– on spiral cable side of connector between spiral cable and steering wheel pad.

OK **Resistance: ∞ Ω**

OK

NG → **Repair or replace spiral cable.**

6 Check harness between center airbag sensor assembly and spiral cable.

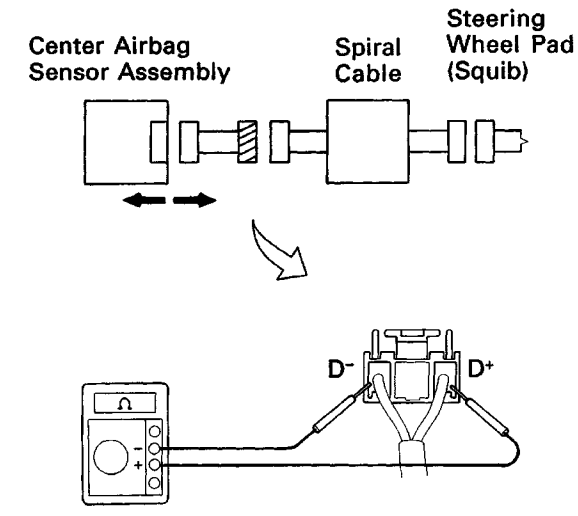

AB0071
AB0068

P (1) Disconnect center airbag sensor assembly connector.
(2) Release airbag activation prevention mechanism on center airbag sensor assembly connector (See page AB–55).

C Measure resistance between D+ and D– on center airbag sensor assembly side of connector between center airbag sensor assembly and spiral cable.

OK **Resistance: ∞ Ω**

OK

NG → **Repair or replace harness or connector between center airbag sensor assembly and spiral cable.**

7 Check center airbag sensor assembly.

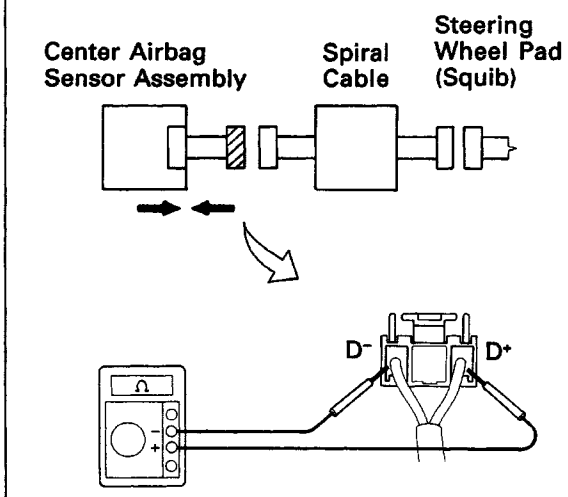

AB0073
AB0068

P Connect center airbag sensor assembly connector.

C Measure resistance between D+ and D– on center airbag sensor assembly side of connector between center airbag sensor assembly and spiral cable.

OK **Resistance: 1 kΩ or More**

OK

NG → **Replace center airbag sensor assembly.**

From the results of the above inspection, the malfunctioning part can now be considered normal. To make sure of this, use the simulation method to check.

Diag. Code 14 Open in Squib Circuit

CIRCUIT DESCRIPTION

The squib circuit consists of the center airbag sensor assembly, spiral cable and the steering wheel pad (squib). It causes the airbag to deploy when the airbag deployment conditions are satisfied.
For details of the function of each component, see FUNCTION OF COMPONENTS on page AB–7.
Diagnostic code 14 is recorded when an open is detected in the squib circuit.

Code No.	Diagnosis
14	• Open circuit in D+ wire harness or D– wire harness of squib. • Squib malfunction. • Spiral cable malfunction. • Center airbag sensor assembly malfunction.

DIAGNOSTIC CHART

1 Preparation.

2 Check squib circuit.
- OK → Go to step 5.
- NG

3 Check spiral cable.
- NG → Repair or replace spiral cable.
- OK

4 Check harness between center airbag sensor assembly and spiral cable.
- NG → Repair or replace harness or connector between center air–bag sensor assembly and spiral cable.
- OK

5 Check center airbag sensor assembly.
- NG → Replace center airbag sensor assembly.
- OK

6 Check squib.
- NG → Replace steering wheel pad.
- OK

From the results of the above inspection, the malfunctioning part can now be con–sidered normal. To make sure of this, use the simulation method to check.

WIRING DIAGRAM

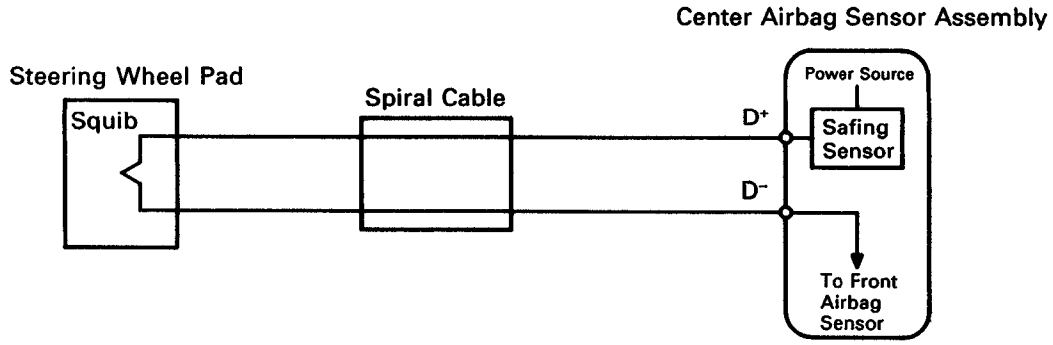

AB0191

INSPECTION PROCEDURES

P Preparation C Check

1 Preparation.

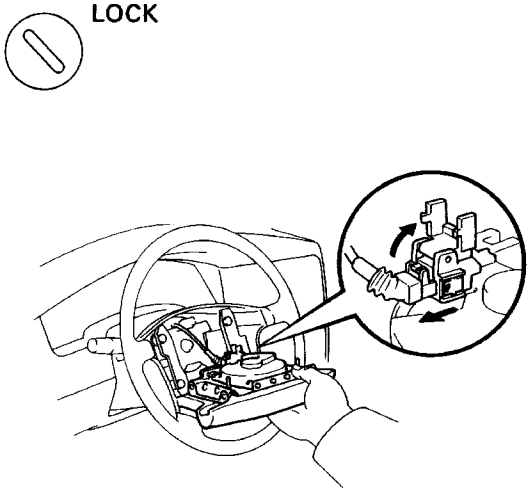

AB0117
AB0267

P (1) Disconnect battery negative H terminal cable, and wait at least 20 seconds.
(2) Remove steering wheel pad (See page AB–15).

Caution

When storing steering wheel pad, keep upper surface of the other pad facing upward.

2 Check squib circuit.

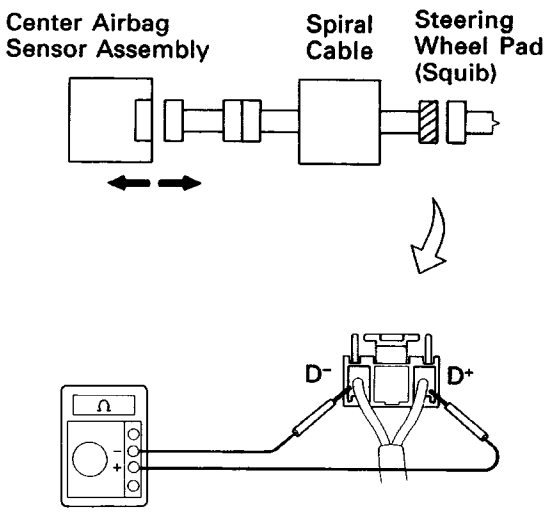

AB0072
AB0068

P Disconnect center airbag sensor assembly connector.

C Measure resistance between D+ and D– on spiral cable side of connector between spiral cable and steering wheel pad.

OK **Resistance: Less than 1 Ω**

NG

OK 〉 **Go to step 5.**

3 Check spiral cable.

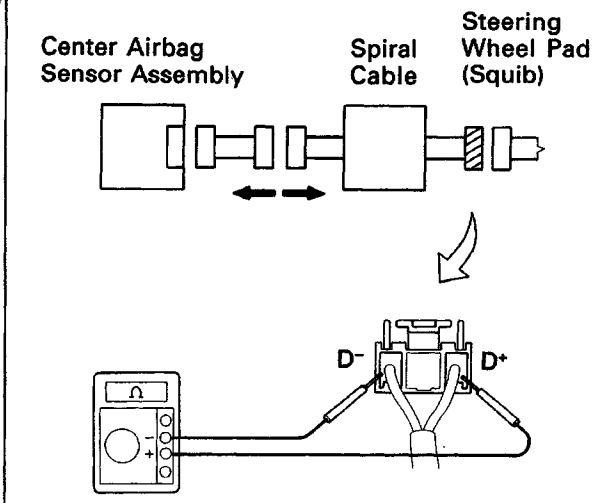

AB0071
AB0068

P Disconnect connector between center airbag sensor assembly and spiral cable.

C Measure resistance between D+ and D! on spiral cable side of connector between spiral cable and steering wheel pad.

OK **Resistance: Less than 1Ω**

OK

NG 〉 **Repair or replace spiral cable.**

4 Check harness between center airbag sensor assembly and spiral cable.

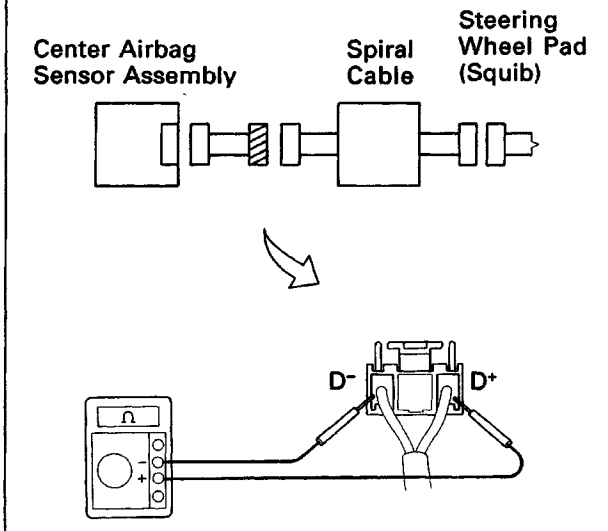

AB0071
AB0068

C Measure resistance between D+ and D– on center airbag sensor assembly side of connector between center airbag sensor assembly and spiral cable.

OK **Resistance: Less than 1 Ω**

OK

NG 〉 **Repair or replace harness or connector between center airbag sensor assembly and spiral cable.**

5 Check center airbag sensor assembly.

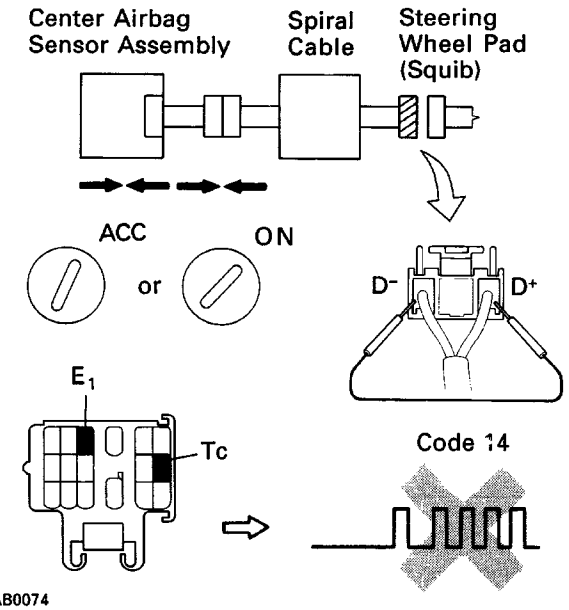

AB0074
AB0069
AB0118 AB0119
SH-18-1 FI1391

P (1) Connect connector to center airbag sensor assembly.
(2) Connect connector between center airbag sensor assembly and spiral cable.
(3) Using a service wire, connect D+ and D– on spiral cable side of connector between spiral cable and steering wheel pad.
(4) Connect negative (–) terminal cable to battery, and wait at least 2 seconds.

C (1) Turn ignition switch ACC or ON, and wait at least 20 seconds.
(2) Using SST, connect terminals Te and E1 of check connector.
SST 09843–18020
(3) Check diagnostic code.

OK **Diagnostic code 14 is not output.**

Hint Codes other than code 14 may be output at this time, but this is not relevant to this check.

OK

NG → **Replace center airbag sensor assembly.**

6 Check Squib.

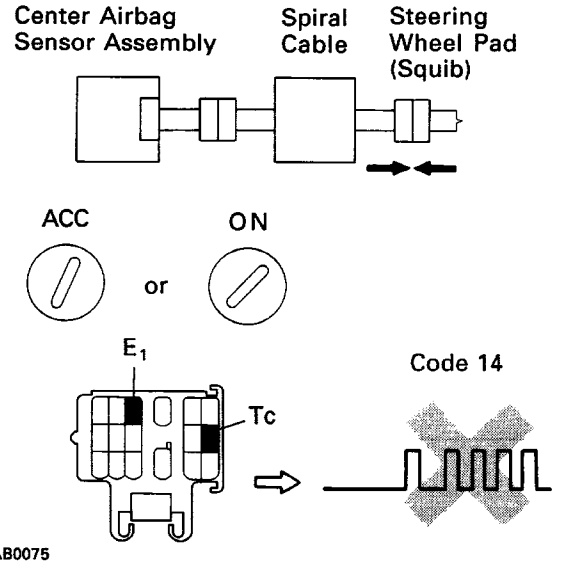

AB0075
AB0118 AB0119
SH-18-1 FI1391

P (1) Turn ignition switch LOCK.
(2) Disconnect battery negative (–) terminal cable, and wait at least 20 seconds.
(3) Connect steering wheel pad (squib) connector.
(4) Connect negative (–) terminal cable to battery, and wait at least 2 seconds.

C (1) Turn ignition switch ACC or ON, and wait at least 20 seconds.
(2) Using SST, connect terminals Tc and E1 of check connector.
SST 09843–18020
(3) Check diagnostic code.

OK **Diagnostic code 14 is not output.**

Hint Codes other than code 14 may be output at this time, but this is not relevant to this check.

OK

NG → **Replace steering wheel pad.**

**From the results of the above inspection, the malfunctioning part can now be considered normal.
To make sure of this, use the simulation method to check.**

Diag. Code 15 Open in Front Airbag Sensor Circuit

CIRCUIT DESCRIPTION

The front airbag sensor detects the deceleration force in a frontal collision and is located in the radiator upper support.

For details of the function of each component, see FUNCTION OF COMPONENTS on page AB–7.

Diagnostic code 15 is recorded when an open is detected in the squib circuit.

NOTICE: The front airbag sensor connector is equipped with an electrical connection check mechanism for the purpose of detecting an open in the front airbag sensor (See page AB–9). This mechanism is constructed so that when the terminals of the front airbag sensor have been connected (when the connector housing lock is in the locked condition), the connection detection pin on the wire harness side connects with the terminals for diagnosis use on the sensor side. If the connector is not properly connected, the diagnosis system may detect only a malfunction code, even though the airbag system is functioning normally.

When connecting the front airbag sensor connector, make sure it is connected properly. If diagnostic code 15 is displayed after the front airbag sensor connector has been connected, check again that it is properly connected.

Code No.	Diagnosis
15	• Open circuit in +S wire harness or –S wire harness of front airbag sensor. • Front airbag sensor malfunction. • Malfunction of electrical connection check mechanism of front airbag sensor. • Center airbag sensor assembly malfunction.

DIAGNOSTIC CHART

1 Preparation.

2 Check front airbag sensor circuit. (Measure resistance between terminals +SR and –SR, +SL and –SL of center airbag sensor assembly connector).

NG → Go to step **4**.

OK

3 Check center airbag sensor assembly.

NG → Replace center airbag sensor assembly.

OK

From the results of the above inspection, the malfunctioning part can now be considered normal. To make sure of this, use the simulation method to check.

4 Check front airbag sensor.

NG → Replace front airbag sensor.

OK

5 Check harness between center airbag sensor assembly and front airbag sensor.

NG → Repair or replace harness or connector between center airbag sensor assembly and front airbag sensor. (See page AB–22).

OK

Replace front airbag sensor connector (See page AB–22).

WIRING DIAGRAM

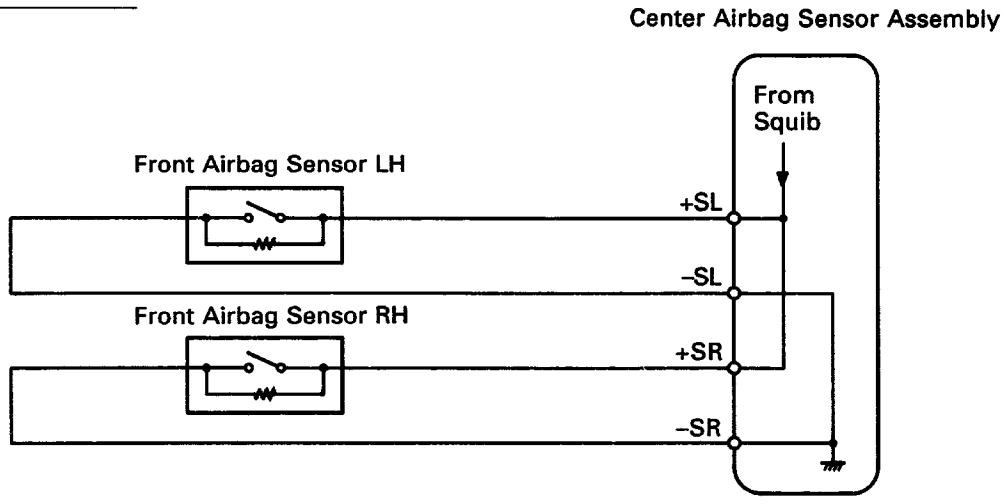

AB0192

INSPECTION PROCEDURES

P Preparation C Check

1 **Preparation.**



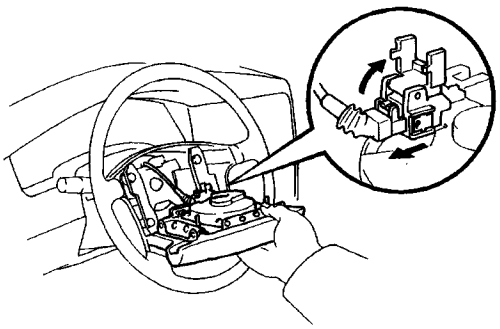

AB0117
AB0267

P (1) Disconnect battery negative (–) terminal cable, and wait at least 20 seconds.
(2) Remove steering wheel pad (See page AB–15).

Caution

When storing steering wheel pad, keep upper surface of pad facing upward.

2 **Check front airbag sensor circuit (Measure resistance between terminals +SR and –SR, +SL and –SL of center airbag sensor assembly connector).**

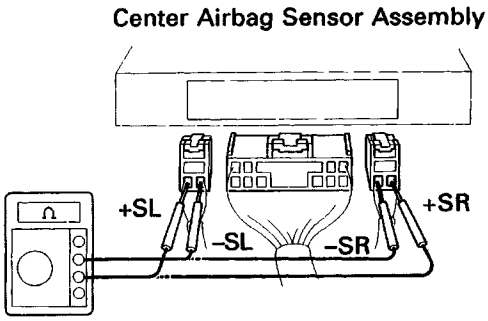

AB0097

P Disconnect center airbag sensor assembly connectors.

C Measure resistance between terminals +SR and –SR, +SL and –SL of harness side connector of center airbag sensor assembly.

OK **Resistance: 755 Ω – 885 Ω**

OK

NG Go to step 4.

3 Check center airbag sensor assembly.

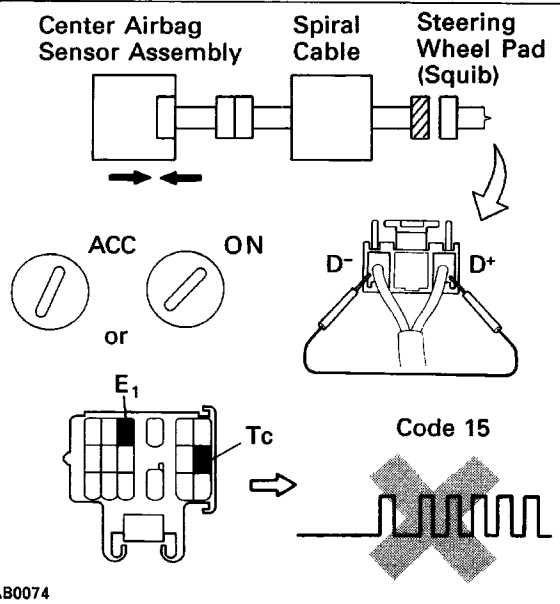

P (1) Connect connectors to center airbag sensor assembly.
(2) Using a service wire, connect D+ and D– on spiral cable side of connector between spiral cable and steering wheel pad.
(3) Connect negative (–) terminal cable to battery, and wait at least 2 seconds.

C (1) Turn ignition switch ACC or ON, and wait at least 20 seconds.
(2) Using SST, connect terminals Tc and E1 of check connector.
SST 09843–18020
(3) Check diagnostic code.

OK **Diagnostic code 15 is not output.**

Hint Codes other than code 15 may be output at this time, but this is not relevant to this check.

OK

NG **Replace center airbag sensor assembly.**

From the results of the above inspection, the malfunctioning part can now be considered normal. To make sure of this, use the simulation method to check.

4 Check front airbag sensor.

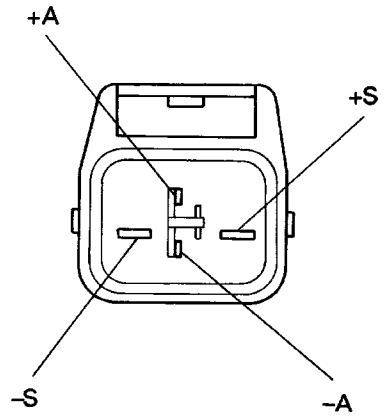

P Disconnect front airbag sensor connector.

C Measure resistance between each terminal of front airbag sensor.

OK

Terminal	Resistance
(+) S – (+) A	755Ω – 885Ω
(+) S – (–) S	∞
(–) S – (–) A	Less than 1Ω

Notice

- **Do not touch ohmmeter probes strongly against terminals of front airbag sensor.**
- **Make sure the front airbag sensor connector is properly connected.**

OK

NG **Replace front airbag sensor.**

5 **Check harness between center airbag sensor assembly and front airbag sensor.**

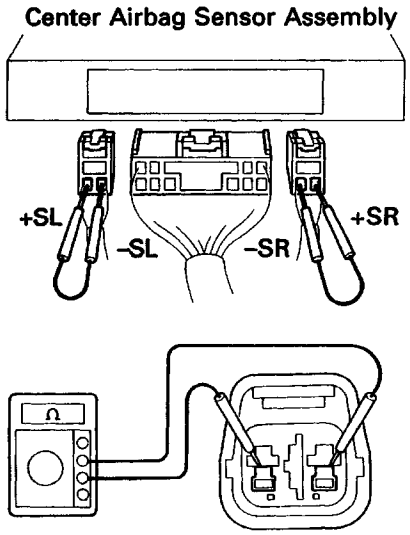

AB0098
AB0039

P (1) Disconnect center airbag sensor assembly connectors.
(2) Using a service wires, connect +SR and –SR, +SL and –SL on the wire harness side of the center airbag sensor assembly connectors.

C Measure resistance between terminals +SR and –SR, +SL and –SL of harness side connector of front airbag sensor.

OK **Resistance: Less than 1Ω**

Notice
- **Lightly touch ohmmeter probes at position shown in illustration.**
- **Make sure the front airbag sensor connector is properly connected.**

OK

NG **Repair or replace harness or connector between center airbag sensor assembly and front airbag sensor (See page AB–22).**

Replace front airbag sensor connector (See page AB–22).

Diag. Code 22 Airbag Warning Light System Malfunction

CIRCUIT DESCRIPTION

The airbag warning light is located on the combination meter.
When the airbag system is normal, the airbag warning light lights up for approx. 6 seconds after the ignition switch is turned from LOCK position to ACC or ON position, and then turns off automatically.
If there is a malfunction in the airbag system, the airbag warning light lights up to inform the driver of the abnormality.
When terminals Tc and E1 of the check connector are connected, the diagnostic code is displayed by the blinking of the airbag warning light.
The airbag warning light circuit is equipped with an electrical connection check mechanism which detects when the connector to the center airbag sensor assembly is not properly connected.
If the connector to the center airbag sensor assembly is not properly connected, the airbag warning light will not light up.
Diagnostic code 22 is recorded when a malfunction occurs in the airbag warning light system.
If an OPEN malfunction occurs in the airbag warning light system, the airbag warning light does not light up, so that until the malfunction is repaired, the diagnostic codes (including code 22) cannot be confirmed.

Code No.	Diagnosis
22	• Open circuit in airbag warning light system. • Center airbag sensor assembly malfunction.

DIAGNOSTIC CHART

Troubleshooting for this system is different for when the airbag warning light does not light up and for when diagnostic code 22 is output. Confirm the problem symptoms first before selecting the appropriate troubleshooting procedure.

HINT: If airbag warning light does not light up, perform the following troubleshooting:

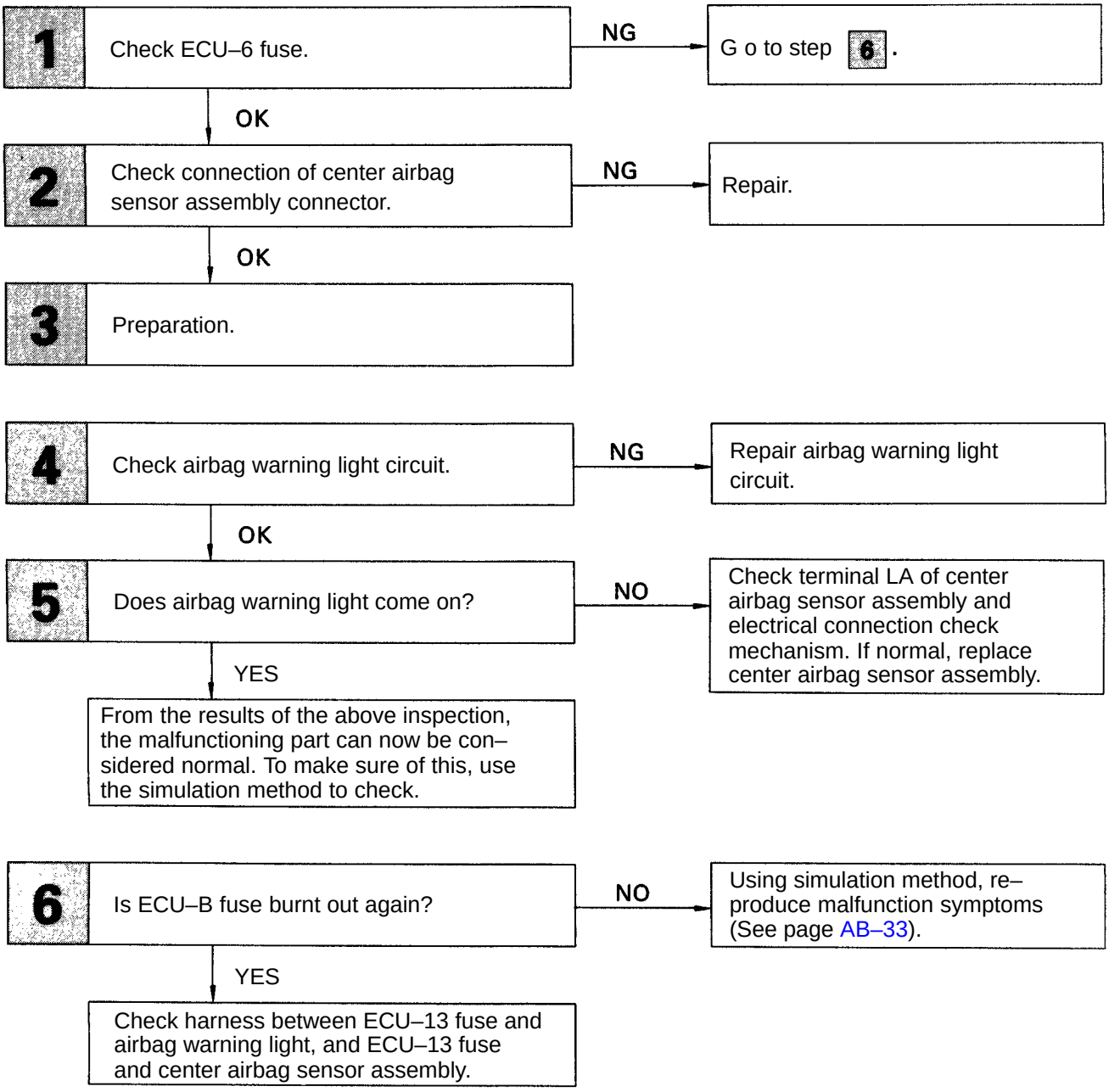

DIAGNOSTIC CHART

HINT: If diagnostic code 22 is output, perform the following troubleshooting:

1 Is diagnostic code 22 output again?

NO → Using simulation method, re–produce malfunction symptoms (See page AB–33).

YES → Replace center airbag sensor assembly.

WIRING DIAGRAM

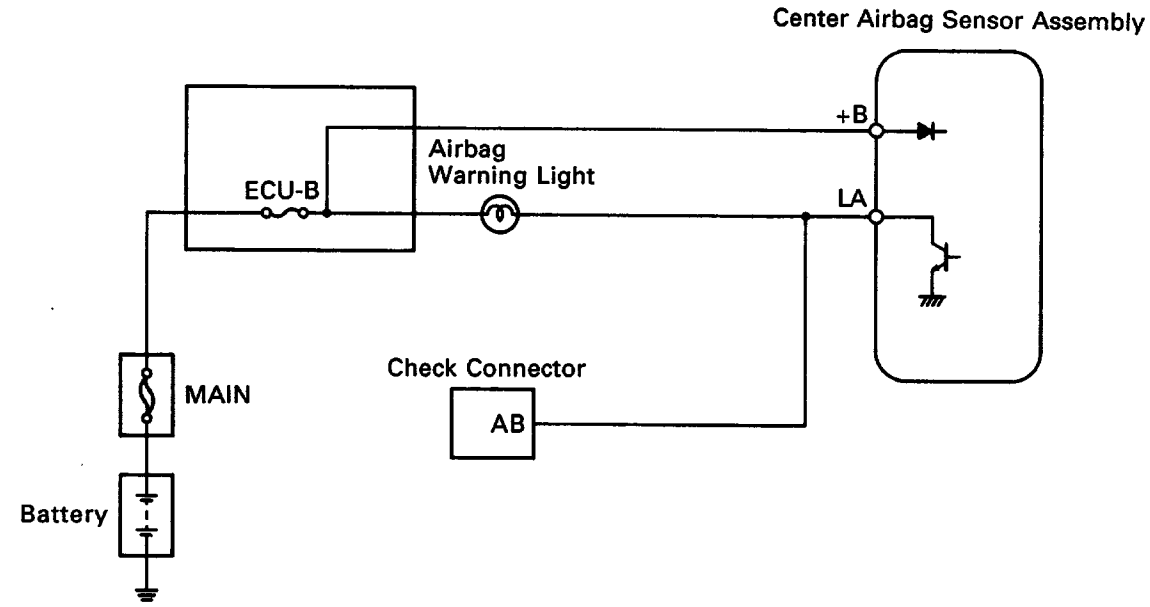

AB0240

INSPECTION PROCEDURES

P Preparation C Check

HINT: If airbag warning light does not light up, perform the following troubleshooting:

1 Check ECU–B fuse.

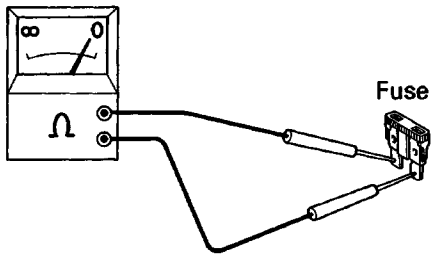

P Remove ECU–13 fuse.

C Check continuity of ECU–13 fuse.

OK **Continuity.**

Hint
- Fuse may be burnt out even if it appears to be OK during visual inspection.
- If fuse is OK, install it.

OK

NG Go to step 6.

2 Check connection of center airbag sensor assembly connector.

OK

NG **Repair.**

3 Preparation.

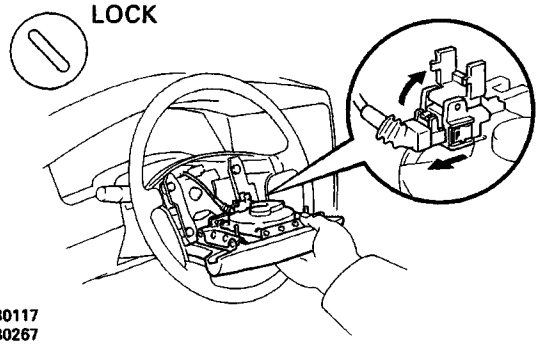

P (1) Disconnect battery negative (–) terminal cable, and wait at least 20 seconds.
(2) Remove steering wheel pad (See page AB–15).

Caution

When storing steering wheel pad, keep upper surface of pad facing upward.

4 Check airbag warning fight circuit.

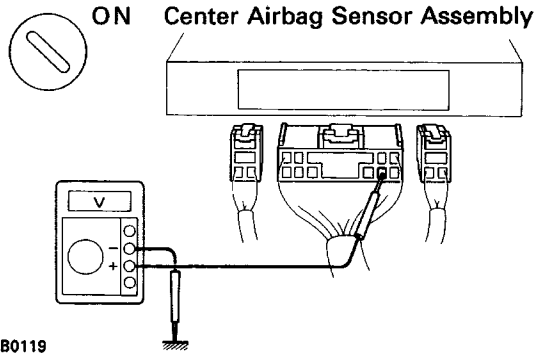

P (1) Disconnect center airbag sensor assembly connector.
(2) Connect negative (–) terminal cable to battery.
(3) Turn ignition switch ACC or ON.

C Measure voltage LA terminal of harness side connector of center airbag sensor assembly.

OK **Voltage: Battery voltage.**

OK

NG **Repair airbag warning light circuit.**

5 Does airbag warning light come on?

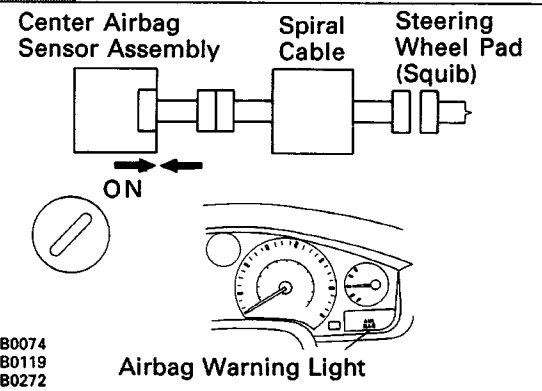

P (1) Disconnect negative H terminal cable from battery.
(2) Connect center airbag sensor assembly con–nector.
(3) Connect negative (–) terminal cable to battery.
(4) Turn ignition switch ACC or ON.

C Check operation of airbag warning light.

YES

NO **Check terminal LA of center airbag sensor assembly and electrical connection check mechanism. If normal, replace center airbag sensor assembly.**

From the results of the above inspection, the malfunctioning part can now be considered normal. To make sure of this, use the simulation method to check.

6 Is new ECU–B fuse burnt out again?

YES

NO **Using simulation method, reproduce mal–function symptoms (See page AB–33).**

Check harness between ECU–B fuse and airbag warning light, and ECU–B fuse and center airbag sensor assembly.

HINT: If diagnostic code 22 is output, perform the following troubleshooting:

1 Is diagnostic code 22 output again?

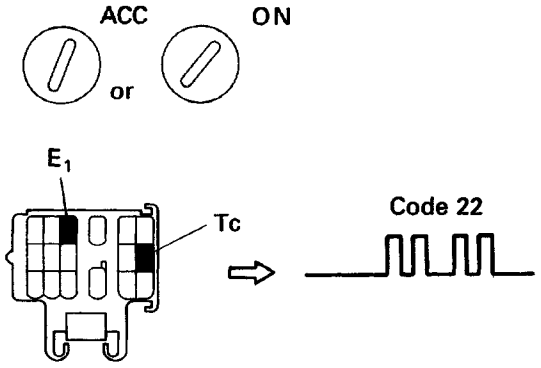

AB0118 AB0119
SH-18-1 FI1392

P Clear malfunction code 41 stored in memory (See page AB–32).

C
(1) Turn ignition switch LOCK, and wait at least 2 seconds.
(2) Turn ignition switch ACC or ON, and wait at least 20 seconds.
(3) Using SST, connect terminals Tc and E1 of check connector.
SST 09843–18020
(4) Check diagnostic code.

YES

NO **Using simulation method, reproduce malfunction symptoms (See page AB–33).**

Replace center airbag sensor assembly.

Diag. Code 31 Center Airbag Sensor Assembly Malfunction

CIRCUIT DESCRIPTION

The center airbag sensor assembly consists of a center airbag sensor, safing sensors, ignition control and drive circuit, diagnosis circuit, etc.
It receives signals from the airbag sensors, judges whether or not the airbag must be activated, and diagnoses system malfunction.
Diagnostic code 31 is recorded when occurrence of a malfunction in the center airbag sensor assembly is detected.

Code No.	Diagnosis
31	• Center airbag sensor assembly malfunction.

DIAGNOSTIC CHART

HINT: When a malfunction code other than code 31 is displayed at the same time, first repair the malfunction indicated by the malfunction code other than code 31.

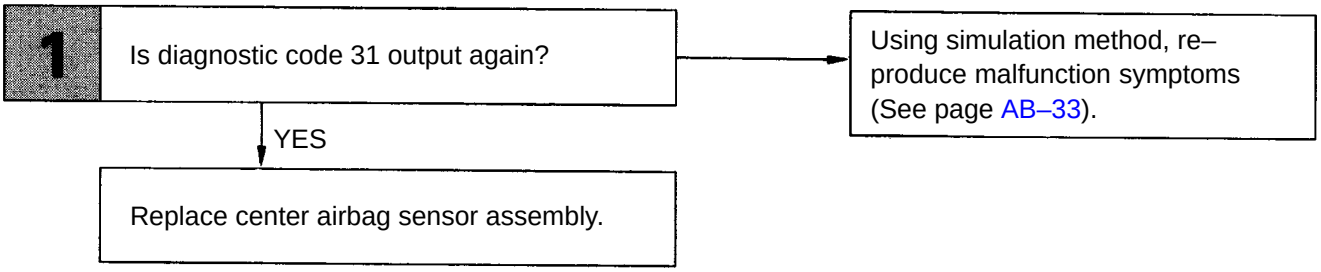

INSPECTION PROCEDURE

HINT: When a malfunction code other than code 31 is displayed at the same time, first repair the mal–function indicated by the malfunction code other than code 31.

P Preparation C Check

1 Is diagnostic code 31 output again?

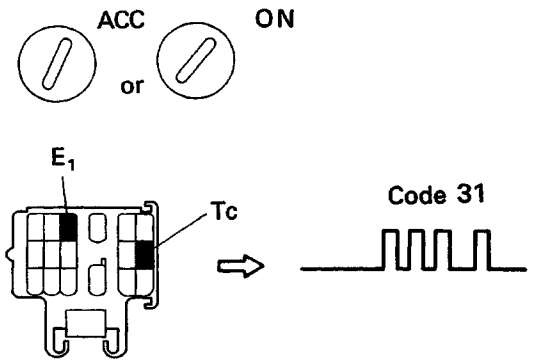

AB0118 AB0119
SH-18-1 FI1394

P Clear malfunction code 41 stored in memory (See page AB–32).

C (1) Turn ignition switch LOCK, and wait at least 20 seconds.
(2) Turn ignition switch ACC or ON, and wait at least 20 seconds.
(3) Repeat operation in step (1) and (2) at least 5 times.
(4) Using SST, connect terminals Tc and E1 of check connector.
SST 09843–18020
(5) Check diagnostic code.

YES

NO → **Using simulation method, reproduce mal–function symptoms (See page AB–33).**

Replace center airbag sensor assembly.

Diag. Code 41 Malfunction Stored in Memory

CIRCUIT DESCRIPTION

If a malfunction occurs in the airbag system, malfunction codes 11 to 31 may be output, and when the battery is disconnected after the malfunction is repaired, malfunction codes 11 to 31 will be cleared, but code 41 will be output instead.
So long as the cancellation operation for a malfunction recorded in memory (See page AB–32) is not performed, code 41 recorded in the center airbag sensor assembly and the airbag warning light remains lit up.

Code No.	Diagnosis
41	• Malfunction recorded in memory. • Center airbag sensor assembly malfunction.

DIAGNOSTIC CHART

1 Check operation of airbag warning light.
- OK → System is normal.
- NG → 2

2 Is diagnostic code 41 output again?
- YES → Check harness between ECU–13 fuse and center airbag sensor assembly. If normal, replace center airbag sensor assembly.
- NO → Perform troubleshooting according to malfunction code output.

WIRING DIAGRAM

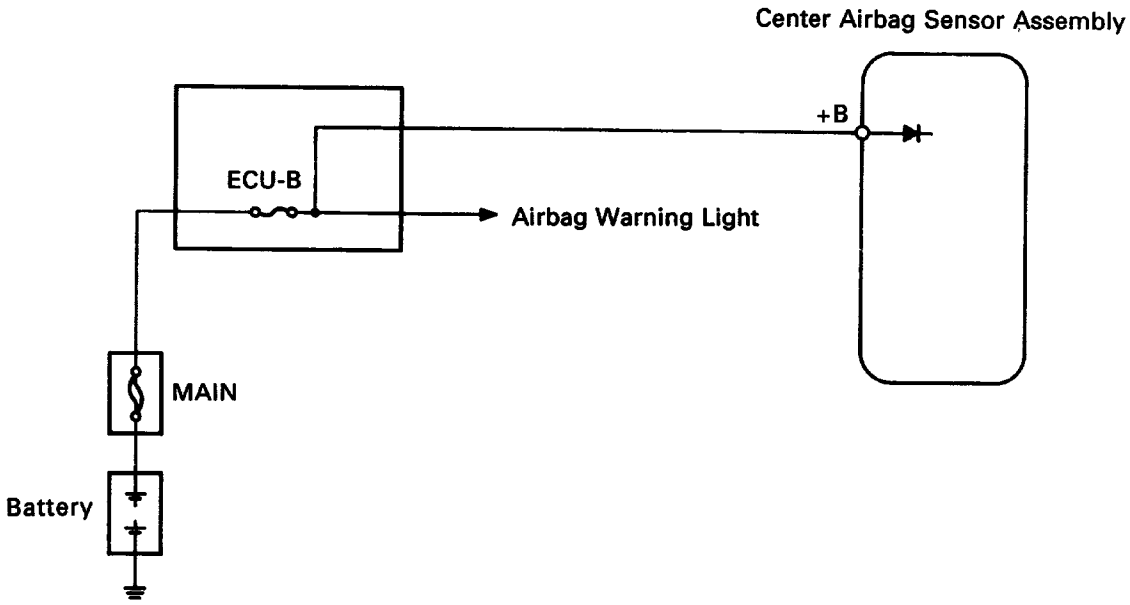

AB0194

INSPECTION PROCEDURES

P Preparation C Check

1 Check operation of airbag warning light.

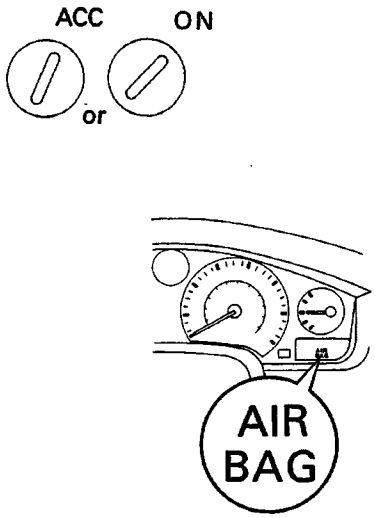

AB0118 AB0119
AB0260

P Clear malfunction code 41 stored in memory (See page AB–32).

C (1) Turn ignition switch LOCK, and wait at least 2 seconds.
(2) Turn ignition switch ACC or ON, and wait at least 20 seconds.
(3) Check operation of airbag warning light.

OK **Airbag warning light turns off.**

NG

OK **System is normal.**

2 Is diagnostic code 41 output again?

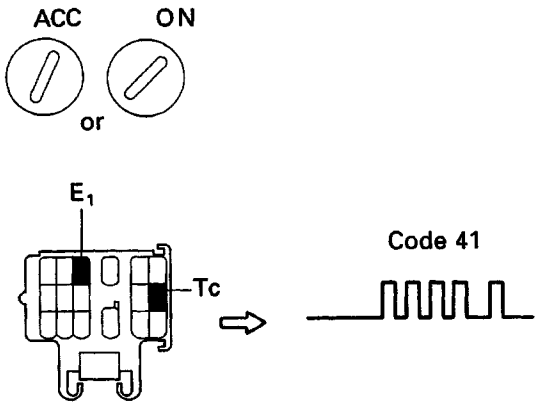

AB0118 AB0119
SH-18-1 FI1396

C (1) Turn ignition switch ACC or ON, and wait at least 20 seconds.
(2) Using SST, connect terminals Tc and E1 of check connector.
SST 09843–18020
(3) Check diagnostic code.

NO

YES **Check harness between ECU–13 fuse and center airbag sensor assembly. If normal, replace center airbag sensor assembly.**

Perform troubleshooting according to malfunction code output.

Diag. Code 12 Short in Squib Circuit or Front Airbag Sensor Circuit (to +B)

CIRCUIT DESCRIPTION

The squib circuit consists of the center airbag sensor assembly, spiral cable and the steering wheel pad (squib). It causes the airbag to deploy when the airbag deployment conditions are satisfied.
The front airbag sensor detects the deceleration force in a frontal collision and is located in the radiator upper support.
For details of the function of each component, see FUNCTION OF COMPONENTS on page AB–7.
Diagnostic code 12 is recorded when a +B short is detected in the squib circuit or front airbag sensor circuit.

Code No.	Diagnosis
12	• Short circuit in squib wire harness (to +B). • Squib malfunction. • Short circuit in front airbag sensor +S wire harness (to +B). • open circuit in RH and LH front airbag sensor harness. • Spiral cable malfunction. • Center airbag sensor assembly malfunction.

DIAGNOSTIC CHART

1 Preparation.

2 Check front airbag sensor circuit. (Measure resistance between terminals +SR and –SR, +SL and –SL of center airbag sensor assembly connector.)
- NG → Go to Code 15 (See page AB–61).
- OK ↓

3 Check front airbag sensor circuit. (Measure voltage between terminals +SR or +SL of center airbag sensor assembly connector and body ground.)
- NG → Repair or replace harness or connector between center air–bag sensor assembly and front airbag sensor (See page AB–22).
- OK ↓

4 Check squib circuit.
- NG → G o to step 7
- OK ↓

5 Check center airbag sensor assembly.
- NG → Replace center airbag sensor assembly
- OK ↓

6 Check squib.
- NG → Replace steering wheel pad.
- OK ↓

From the results of the above inspection, the malfunction part can now be con–sidered normal. To make sure of this, use the simulation method to check.

7 Check spiral cable.
- NG → Repair or replace spiral cable.
- OK ↓

Repair or replace harness or connector between center airbag sensor assembly and spiral cable.

WIRING DIAGRAM

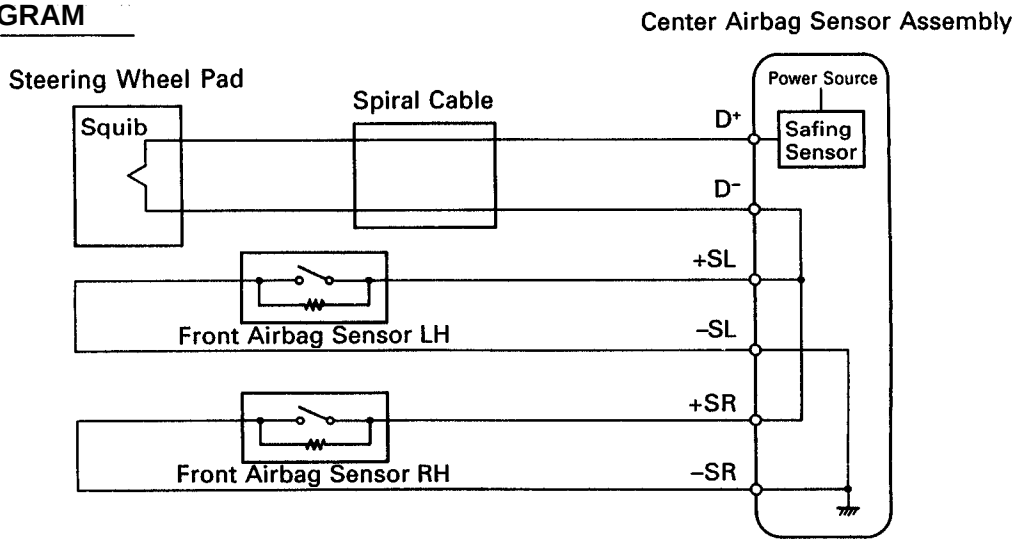

AB0190

INSPECTION PROCEDURES

P Preparation C Check

1 Preparation.

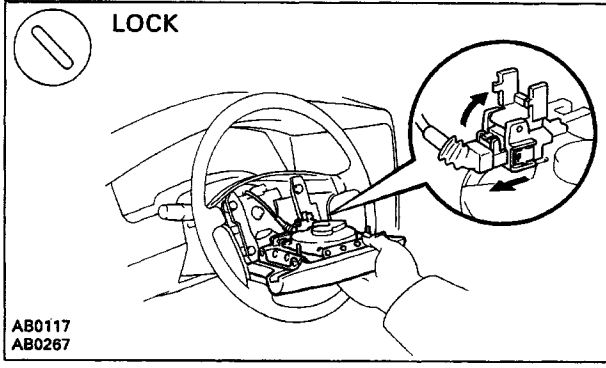

P (1) Disconnect battery negative (–) terminal cable, and wait at least 20 seconds.
(2) Remove steering wheel pad (See page AB–15).

Caution

When storing steering wheel pad, keep upper surface of other pad facing upward.

2 Check front airbag sensor circuit. (Measure resistance between terminals +SR and –SR, +SL and –SL of center airbag sensor assembly connector.)

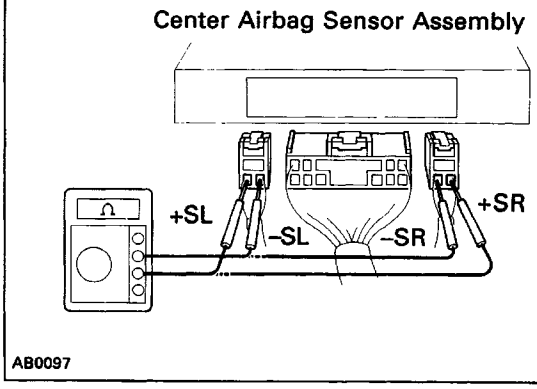

P Disconnect center airbag sensor assembly connectors.

C Measure resistance between terminals +SR and –SR, +SL and –SL of harness side connector of center airbag sensor assembly.

OK **Resistance: 755 Ω – 885 Ω**

OK

NG **Go to Code 15 (See page AB–61).**

3 Check front airbag sensor circuit. (Measure– resistance between terminal +SR or +SL of center airbag sensor assembly connector and body ground.)

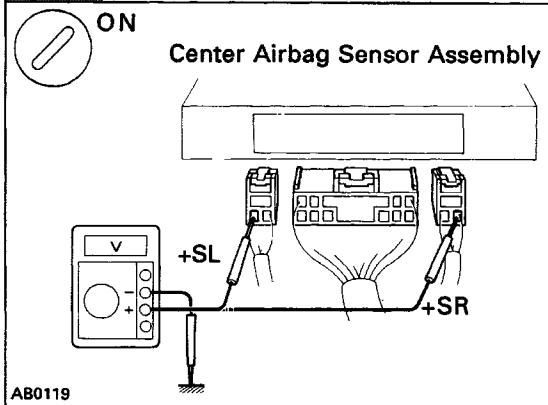

P (1) Connect negative H terminal cable to battery.
(2) Turn ignition switch ON.

C Measure voltage between terminals +SR or +SL of harness side connector of center airbag sensor assembly and body ground.

OK **Voltage: 0 V**

OK

NG **Repair or replace harness or connector between center airbag sensor assembly and front airbag sensor (See page AB–22).**

4 Check squib circuit.

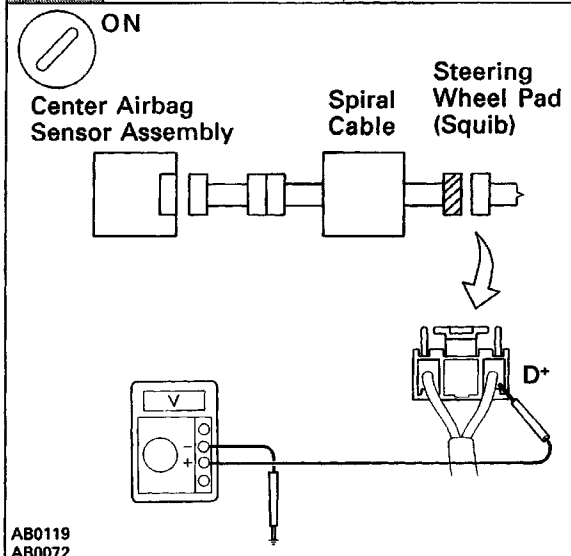

C Measure voltage at D+ on spiral cable side of connector between spiral cable and steering wheel pad.

OK **Voltage: 0 V**

OK

NG → **Go to Step 7.**

3 Check center airbag sensor assembly.

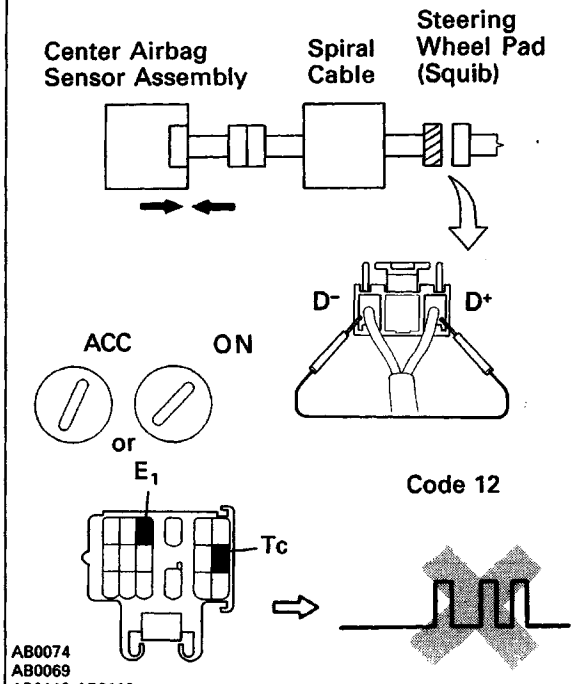

P
(1) Turn ignition switch LOCK.
(2) Disconnect negative (–) terminal cable from battery.
(3) Connect connectors to center airbag sensor assembly.
(4) Using a service wire, connect D+ and D– on spiral cable side of connector between spiral cable and steering wheel pad.
(5) Connect negative (–) terminal cable to bat–tery, and wait at least 2 seconds.

C
(1) Turn ignition switch ACC or ON, and wait at least 20 seconds.
(2) Using SST, connect terminals Tc and E¿ of check connector.
SST 09843–18020
(3) Check diagnostic code.

OK **Diagnostic code 12 is not output.**

Hint Codes other than code 12 may be output at this time, but this is not relevant to this check.

OK

NG → **Replace center airbag sensor assembly.**

6 Check squib.

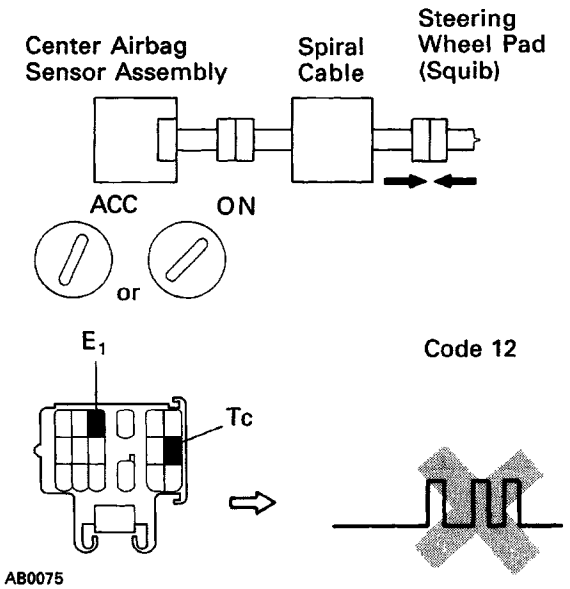

P (1) Turn ignition switch LOCK.
(2) Disconnect battery negative (–) terminal cable, and wait at least 20 seconds.
(3) Connect steering wheel pad (squib) connector.
(4) Connect negative (–) terminal cable to battery, and wait at least 2 seconds.

C (1) Turn ignition switch ACC or ON, and wait at least 20 seconds.
(2) Using SST, connect terminals Tc and E1 of check connector.
SST 09843–18020
(3) Check diagnostic code.

OK **Diagnostic code 12 is not output.**

Hint Codes other than code 12 may be output at this time, but this is not relevant to this check.

OK

NG → **Replace steering wheel pad.**

From the results of the above inspection, the malfunctioning part can now be considered normal. To make sure of this, use the simulation method to check.

8 Check spiral cable.

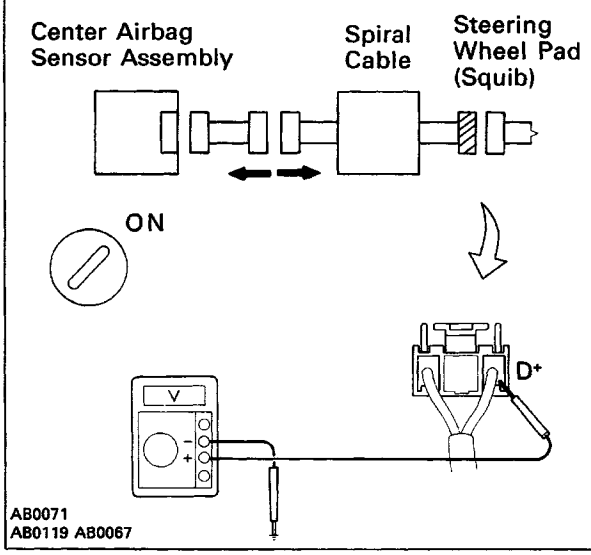

P (1) Turn ignition switch LOCK.
(2) Disconnect connector between center airbag sensor assembly and spiral cable.
(3) Turn ignition switch ON.

C Measure voltage at D+ on spiral cable side of connector between spiral cable and steering wheel pad.

OK **Voltage: 0 V**

OK

NG → **Repair or replace spiral cable.**

Repair or replace harness or connector between center airbag sensor assembly and spiral cable.

Circuit Inspection

Diag. Code (Normal) Source Voltage Drop

CIRCUIT DESCRIPTION

The airbag system is equipped with a voltage–increase circuit (DC–DC converter) in the center airbag sensor assembly in case the source voltage drops.
When the battery voltage drops, the voltage–increase circuit (DC–DC converter) functions to increase the voltage of the airbag system to normal voltage.
The diagnosis system malfunction display for this circuit is different to other circuits – when the airbag warning light remains lit up and the diagnostic code is a normal code, source voltage drop is indicated.
Malfunction in this circuit is not recorded in the center airbag sensor assembly, and approx. 10 seconds after the source voltage returns to normal, the airbag warning light automatically goes off.

Code No.	Diagnosis
(Normal)	Source voltage drop.

DIAGNOSTIC CHART

1 Preparation.

2 Does airbag warning light turn off after approx. 10 seconds?

No → Check diagnostic code, and if a mal–function code is output, perform troubleshooting according to mal–function code. If a normal code is output, replace center airbag sensor assembly.

Yes → Check battery and charging system (See page CH–1).

WIRING DIAGRAM

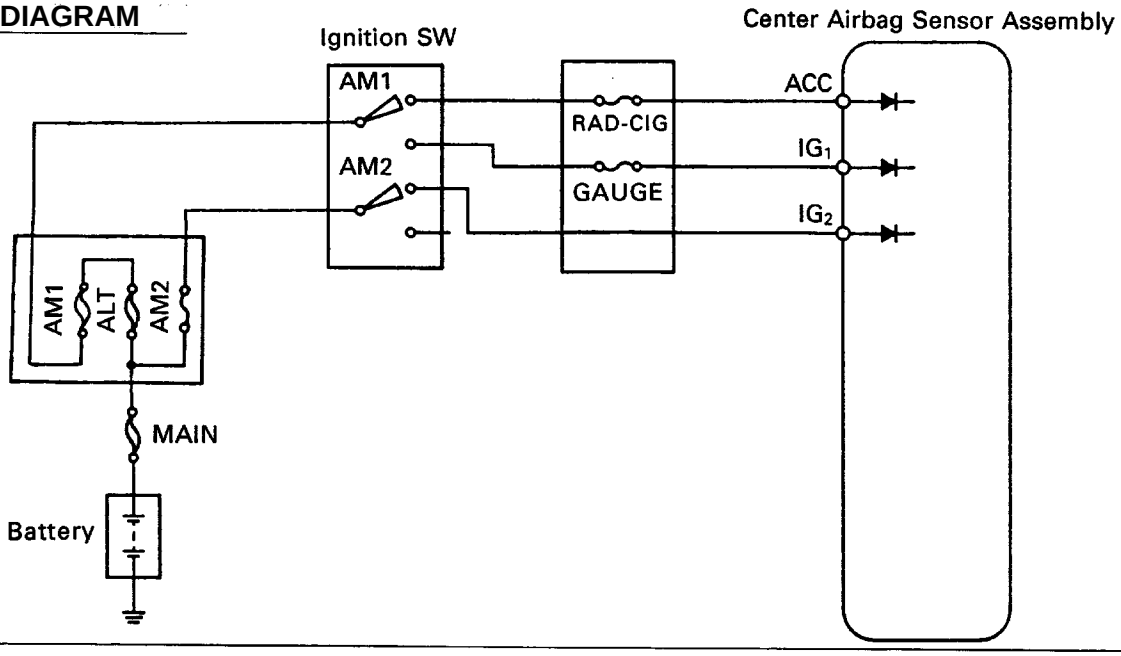

INSPECTION PROCEDURES

P Preparation C Check

1 Preparation.

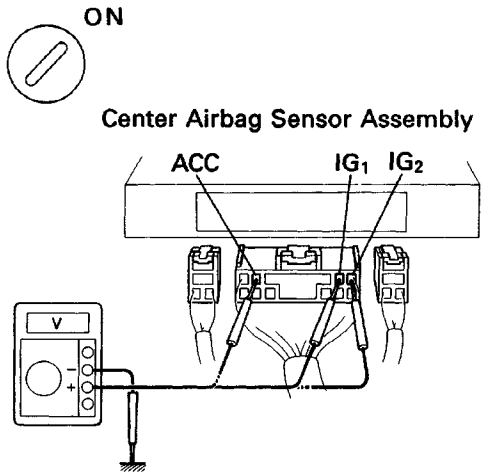

AB0119
AB0094

P (1) Turn ignition switch LOCK.
(2) Disconnect center airbag sensor assembly connector.
(3) Turn ignition switch ON. But do not start engine.
(4) Measure voltage at IG1, IG2 or ACC on connector wire harness side of center airbag sensor assembly and operate electric system (defogger, wiper, headlight, heater blower, etc.)
Voltage: 6V – 11.5V at IG1, IG2 and ACC.
(5) Turn electric system switch OFF.
(6) Turn ignition switch LOCK.
(7) Remove voltmeter and connect center airbag sensor assembly connector.

2 Does airbag warning light turn off after approx. 10 seconds?

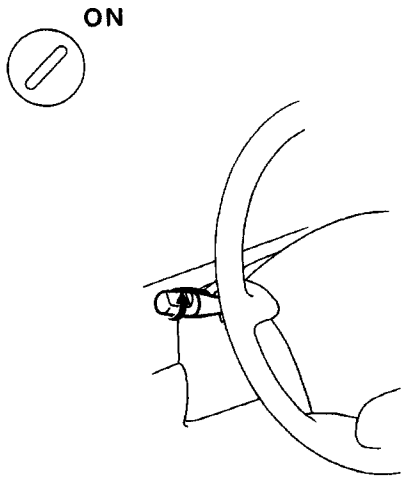

AB0119
AB0234

P Turn ignition switch ON.

C Operate electric system check in 1 (4) and check that airbag warning light goes off after approx. 10 seconds.

YES

NO → **Check diagnostic code, and if a malfunction code is output, perform troubleshooting according to malfunction code. If a normal code is output, replace center airbag sensor assembly.**

Check battery and charging system (See page CH–1).

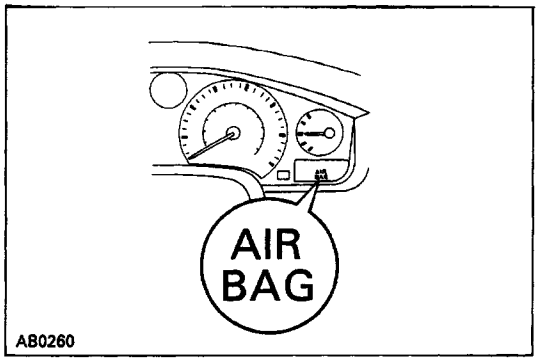

Diagnosis Inspection

AIRBAG WARNING LIGHT CHECK

(a) Turn the ignition switch to ACC or ON and check that the airbag warning light lights up.

(b) Check that the airbag warning light goes out after approx. 6 seconds.

HINT:

- When the ignition switch is at ACC or ON and the airbag warning light remains on, the center airbag sensor assembly has detected a malfunction code.
- If, after approx. 6 seconds have elapsed, the airbag warning light sometimes lights up or the airbag warning light lights up even when the ignition switch is OFF, a short in the airbag warning light circuit can be considered likely.

  Proceed to “Airbag warning light system (always lit up)” on page AB–76.

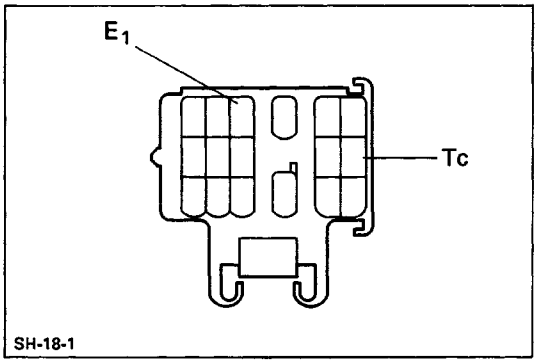

DIAGNOSTIC CODE CHECK

1. OUTPUT DIAGNOSTIC CODE

(a) Turn the ignition switch to ACC or ON position and wait approx. 20 seconds.

(b) Using SST, connect terminals Tc and E1 of the check connector.

SST 09843–18020

NOTICE: Never make a mistake with the terminal connection position as this will cause a malfunction.

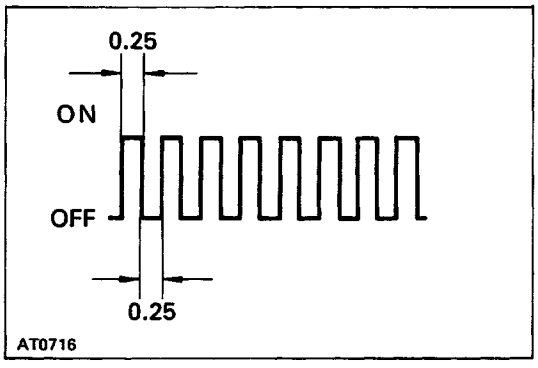

2. READ DIAGNOSTIC CODE

Read the diagnostic code as indicated by the number of times the airbag warning light blinks.

- **Normal code indication**
  The light will blink 2 times per second.
- **Malfunction code indication**
  In the even of a malfunction, the light will blink. The first number of the code No. will equal the first digit of a 2–digit diagnostic code, and after a 1.5 second pause, the 2nd number of the code No. will equal the 2nd digit. If there are two or more codes, there will be a 2.5 second pause between each. After all the codes have been output, there will be a 4.0 second pause and they will all be repeated.

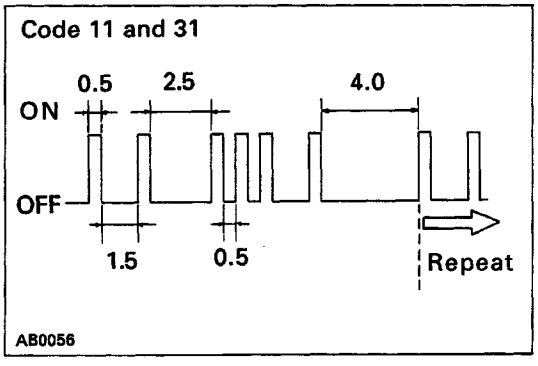

HINT:

- In the event of a number of trouble codes, indication will begin from the smaller numbered code to the larger.
- If a diagnostic code is not output or is continuously output, proceed to the Tc terminal circuit inspection on page AB–78.

DIAGNOSTIC CODES

Code No.	Blink Pattern	Diagnosis	Trouble Area	AIRBAG warning Light
(Normal)	 FI1401	• System normal	—	OFF
		• Source voltage drop	• Battery • Center airbag sensor assembly	ON
11	 AB0057	• Short in squib circuit or front airbag sensor circuit (to ground)	• Steering wheel pad (squib) • Front airbag sensor • Spiral cable • Center airbag sensor assembly • Wire harness	ON
12	 FI1389	• Short in squib circuit or front airbag sensor circuit (to +B)	• Steering wheel pad (squib) • Front airbag sensor • Spiral cable • Center airbag sensor assembly • Wire harness	ON
13	 FI1390	• Short in squib circuit (between D+ wire harness and D– wire harness)	• Steering wheel pad (squib) • Spiral cable • Center airbag sensor assembly • Wire harness	ON
14	 FI1391	• Open in squib circuit	• Steering wheel pad (squib) • Spiral cable • Center airbag sensor assembly • Wire harness	ON
15	 AB0058	• Open in front airbag sensor circuit	• Front airbag sensor • Center airbag sensor assembly • Wire harness	ON
22	 FI1392	• Airbag warning light system malfunction	• Airbag warning light • Center airbag sensor assembly • Wire harness	ON
31	 FI1394	• Center airbag sensor assembly malfunction	• Center airbag sensor assembly	ON
41	 FI1396	• Malfunction stored in memory	• (Center airbag sensor assembly)	ON

HINT:

- When the airbag warning light remains lit up and the diagnostic code is the normal code, this means a source voltage drop.
  This malfunction is not stored in memory by the center airbag sensor assembly and if the power source voltage returns to normal, after approx. 10 seconds the airbag warning light will automatically go out.
- Code 22 is recorded when a malfunction occurs in the airbag warning light system.
  If an open malfunction occurs in the airbag warning light system, the airbag warning light does not light up, so that until the malfunction is repaired, the diagnostic codes (including code 22) cannot be confirmed.
- When a malfunction occurs in the airbag system, malfunction codes 11 to 31 are output. After repairing the malfunction indicated by malfunction codes 11 to 31, codes 11 to 31 are cleared from the memory, but code 41 is output instead.
  Once the malfunction has been detected, the airbag warning light will remain lit up until code 41 is cleared, even though the malfunction has been repaired.
- When two or more codes are indicated, the lowest numbered code will appear first.
- If a code not listed on the chart is displayed, then the center airbag sensor assembly is faulty.

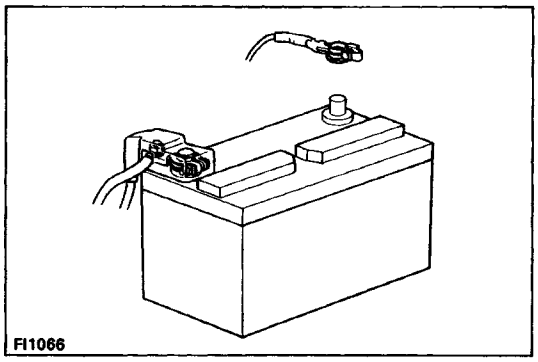

CLEARING OF DIAGNOSTIC CODE

1. CLEARING OF MALFUNCTION CODE (EXCEPT CODE 41)

Remove the battery negative terminal or ECU–B fuse for 10 seconds or more with the ignition switch OFF.

NOTICE: When connecting the battery after cancelling the malfunction code, always do it with the ignition switch in LOCK position. If the battery is connected with the ignition switch in ACC or ON position, there are cases when the diagnosis system does not operate normally.

HINT:

- Code 41 cannot be cleared by this method.
- The lower the temperature, the longer the battery negative terminal must be left off.
- Other memory systems (clock, audio system) will also be cancelled out (See page AB–2).

2. CLEARING OF MALFUNCTION CODE 41 STORED IN MEMORY

(a) Connect service wires to terminals Tc and AB of the check connector.

(b) Turn the ignition switch ACC or ON and wait approx.6 seconds.

(c) Starting with the Tc terminal, apply body ground alternately to terminal Tc and terminal AB twice each in cycles of 1.0 ± 0.5 seconds.
Finally, keep applying body ground to terminal Tc.
HINT: When alternating between body ground of terminals Tc and AB release one from body ground while applying it to the other terminal. The time interval in between must be within the following conditions. If it is out of the conditions, code 41 will not be cleared.

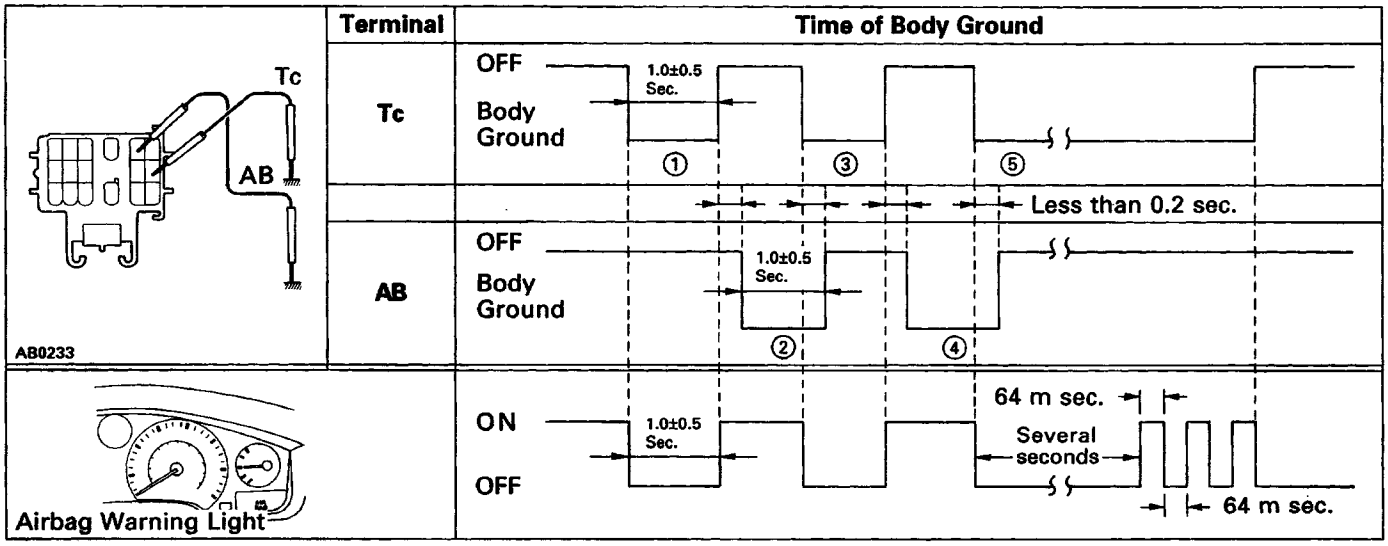

(d) After several seconds, when the airbag warning light starts to blink in a 64 msec. cycle, cancellation is completed.
HINT: This method clears not only code 41, but also other malfunction codes all at once.

Except when instructed by the troubleshooting procedure, use this method only when the repair procedure is completed (See page AB–25).

Diagnostic Code Chart

If a malfunction code is displayed during the diagnostic code check, check the circuit listed for that code in the table below (Proceed to the page given for that circuit).

Code No.	Diagnosis	Page
(Normal)* 1	• Source voltage drop	AB–36
11	• Short in squib circuit or front airbag sensor circuit (to ground)	AB–38
12	• Short in squib circuit or front airbag sensor circuit (to +B)	AB–44
13	• Short in squib circuit (Between D+ wire harness and D– wire harness)	AB–49
14	• Open in squib circuit	AB–56
15	• Open in front airbag sensor circuit	AB–61
22*2	• Airbag warning light system malfunction	AB–66
31	• Center airbag sensor assembly malfunction	AB–72
41*3	• Malfunction stored in memory	AB–74

HINT:

*1 When the airbag warning light remains lit up and the diagnostic code is the normal code, this means a source voltage drop.

*2 Code 22 is recorded when a malfunction occurs in the airbag warning light system.
If an open malfunction occurs in the airbag warning light system, the airbag warning light does not light up, so that until the malfunction is repaired, the diagnostic codes (including code 22) cannot be confirmed.

*3 When a malfunction occurs in the airbag system, malfunction codes 11 to 31 are output. After repairing the malfunction indicated by malfunction codes 11 to 31, codes 11 to 31 are cleared from the memory, but code 41 is output instead.
Once the malfunction has been detected, the airbag warning light will remain lit up until code 41 is cleared, even though the malfunction has been repaired.

Problem Symptom Chart

Proceed with troubleshooting of each circuit in the table below.

Problem Symptom	Inspection Item	Page
• With the ignition switch at ACC or ON, the airbag warning light sometimes light up after approx. 6 seconds have elapsed. • Airbag warning light lights up even when ignition switch is in the LOCK position.	• Airbag warning light system (Always lit up)	AB–76
• Diagnostic code not displayed. • Diagnostic code continuously displayed.	• Te terminal circuit	AB–78

TROUBLESHOOTING

How To Proceed With Troubleshooting

Malfunction symptoms of the airbag system are difficult to confirm, so the diagnostic codes become the most important source of information when troubleshooting.

Perform troubleshooting of the airbag system in accordance with the following procedure:

HINT: Do not disconnect the battery negative (–) terminal cable until step [3] , Diagnostic Code Check and Recording, has been completed.

[1] CUSTOMER PROBLEM ANALYSIS

Using the CUSTOMER PROBLEM ANALYSIS CHECK SHEET (See page AB–29) for reference, ask the customer in as much detail as possible about the problem.

[2] WARNING LIGHT CHECK

Check the airbag warning light. If the light remains on, a malfunction is stored in the center airbag sensor assembly, so proceed to step [3] . If the airbag warning light is not on, a malfunction has occurred in the airbag warning light circuit, so perform troubleshooting for code 22.

HINT: Code 22 is recorded when a malfunction occurs in the airbag warning light system.

If an open malfunction occurs in the airbag warning light system, the airbag warning light does not light up, so that until the malfunction is repaired, the diagnostic codes (including code 22) cannot be confirmed.

[3] DIAGNOSTIC CODE CHECK AND RECORDING

Check the diagnostic codes , and make a note of any malfunction codes which are output. If a normal code is output, an abnormality in the power source circuit may have occurred, so perform trou–bleshooting for source voltage in step [8].

If code 22 is output, skip step [4] and [5] and proceed to step [7].

[4] CLEARING OF MALFUNCTION CODE (EXCEPT CODE 41)

Clear the malfunction code.

HINT: The malfunction code output in step [3] indicates that a malfunction has occurred in the circuit designated by the malfunction code, but does not indicate whether the malfunction is still occurring or whether it was in the past. .

Accordingly, it is necessary to find out the present condition of the malfunction occurrence by clearing the malfunction code and performing the diagnostic code check again. If this operation is neglected and troubleshooting is performed using only the malfunction code confirmed in step [3] isolating the problem component becomes difficult and invites mistaken diagnosis.

[5] DIAGNOSTIC CODE CHECK AND RECORDING [6] SYMPTOM SIMULATION

After repeating ignition switch ON – OFF operation (ON: wait 20 secs., OFF: wait 20 secs.) 5 times, check the diagnostic code. If any code other than code 41 is output, the malfunction is still occurring, so proceed to step [7].

If code 41 only is output, the following three cases are possible:

- Intermittent trouble occurred previously, but it is now normal.
- The problem has been corrected, but clearing of code 41 has been forgotten.
- There is a malfunction in the circuit for code 41.
  Focusing on the circuit of the malfunction code stored in step [3] , use the simulation method in step [6] in order to simulate the malfunction. If the malfunction occurs, proceed to step [7] ; if not, proceed to step [12].

NOTICE: When connecting the battery after clearing the malfunction code, always do it with the ignition switch in LOCK position.
When the battery has been reconnected, turn the ignition switch to ACC or ON position after at least 2 seconds have elapsed.
If the battery is reconnected with the ignition switch in ACC or ON position, or the ignition switch is turned to ACC or ON within 2 seconds of connecting the battery, it is possible that the diagnosis system will not operate normally.
HINT: Determine the malfunction in the airbag system in step [6] by whether or not a malfunction code other than code 41 is output.

[7] DIAGNOSTIC CODE CHART

Proceed to the appropriate flow chart in step [8] in accordance with the malfunction code found in step [5] or [6] .

[8] CIRCUIT INSPECTION [9] REPAIR

Find out if the problem lies in a sensor, actuator or wire harness and connector, and repair the problem. After the problem part is repaired, reinstall the disassembled parts. Do not start work until at least 20 seconds after the ignition switch is turned to the LOCK position and the negative H terminal cable is disconnected.
CAUTION: If incorrect procedure is used, a malfunction may occur in the system or there is the danger that the airbag may be accidentally activated during the repair operation. Carefully read the GENERAL DESCRIPTION (See page AB–2) and the cautions for each operation, and perform repairs in the correct order using the correct methods.
HINT: The following illustration for the CIRCUIT INSPECTION shows each connector for the circuit from the center airbag sensor assembly to the steering wheel pad (squib).

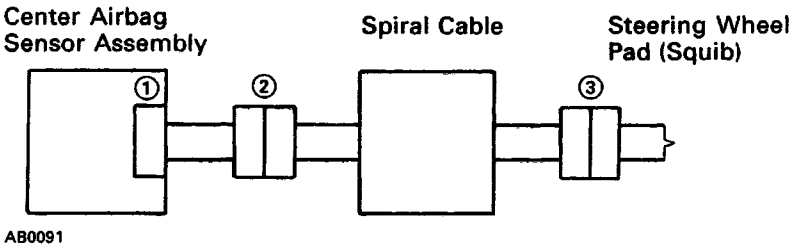

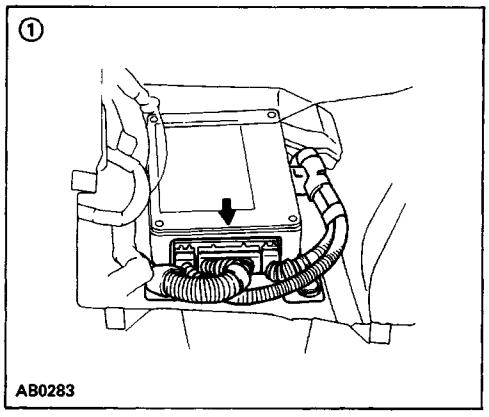

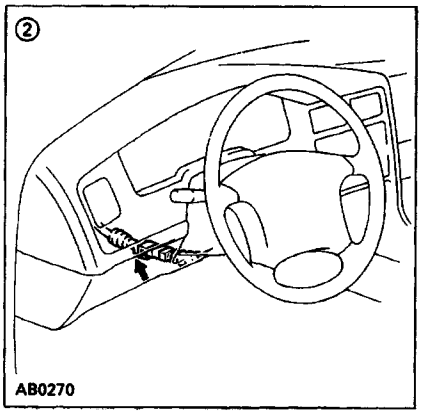

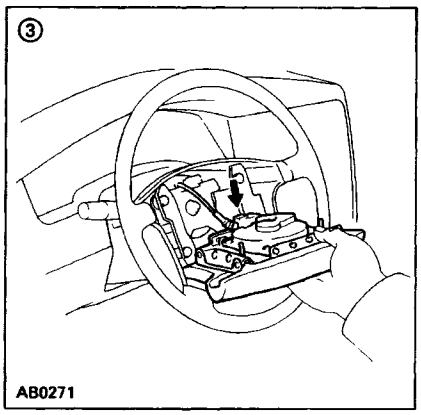

[10] CLEARING OF MALFUNCTION CODE (EXCEPT CODE 41)

When all the malfunction codes found in steps [5] and [6] have been repaired, clear the malfunction codes.

[11] DIAGNOSTIC CODE CHECK

After repeating ignition switch ON – OFF operation (ON: wait 20 secs., OFF: wait 20 secs.) 5 times, check the diagnostic codes. If only code 41 is displayed, proceed to step [12] . If a code other than 41

is displayed, return to step 7 and troubleshoot the displayed malfunction code.

NOTICE: When connecting the battery after clearing the malfunction code, always do it with the ignition switch in LOCK position.

When the battery has been reconnected, turn the ignition switch to ACC or ON position after at least 2 seconds have elapsed.

If the battery is reconnected with the ignition switch in ACC or ON position, or the ignition switch is turned to ACC or ON within 2 seconds, of connecting the battery, it is possible that the diagnosis system will not operate normally.

[12] CLEARING OF MALFUNCTION CODE 41 STORED IN MEMORY

Clear malfunction code 41 stored in memory. This operation is not necessary only in case that the power source voltage returns to normal.

[13] CONFIRMATION TEST

Check the warning light again and confirm that all the malfunctions have been repaired. If the warning light indicates an abnormality, repeat the operation again from step 2 . If code 41 is out–put at step [3] , skip steps [4] and [5] and proceed to step [7].

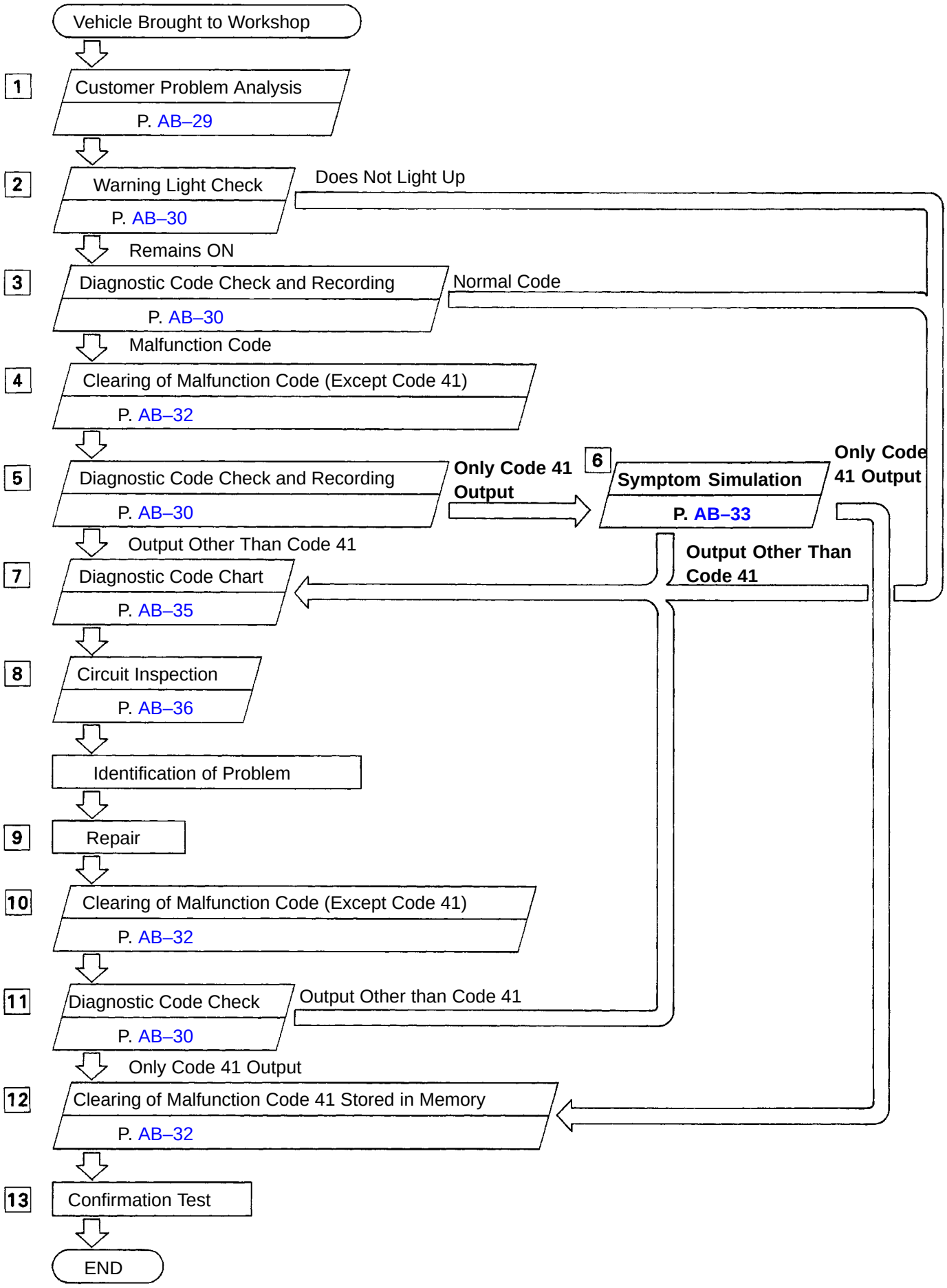
Vehicle Brought to Workshop
1
Customer Problem Analysis
P. AB–29
2
Warning Light Check
P. AB–30
Does Not Light Up
Remains ON
3
Diagnostic Code Check and Recording
P. AB–30
Normal Code
Malfunction Code
4
Clearing of Malfunction Code (Except Code 41)
P. AB–32
5
Diagnostic Code Check and Recording
P. AB–30
Only Code 41 Output
6
Symptom Simulation
P. AB–33
Only Code 41 Output
Output Other Than Code 41
Output Other Than Code 41
7
Diagnostic Code Chart
P. AB–35
8
Circuit Inspection
P. AB–36
Identification of Problem
9
Repair
10
Clearing of Malfunction Code (Except Code 41)
P. AB–32
11
Diagnostic Code Check
P. AB–30
Output Other than Code 41
Only Code 41 Output
12
Clearing of Malfunction Code 41 Stored in Memory
P. AB–32
13
Confirmation Test
END

Diagnostic Code Chart

If a malfunction code is displayed during the diagnostic code check, check the circuit listed for that code in the table below (Proceed to the page given for that circuit).

Code No.	Diagnosis	Page
(Normal)* 1	• Source voltage drop	AB–36
11	• Short in squib circuit or front airbag sensor circuit (to ground)	AB–38
12	• Short in squib circuit or front airbag sensor circuit (to +B)	AB–44
13	• Short in squib circuit (Between D+ wire harness and D– wire harness)	AB–49
14	• Open in squib circuit	AB–56
15	• Open in front airbag sensor circuit	AB–61
22*2	• Airbag warning light system malfunction	AB–66
31	• Center airbag sensor assembly malfunction	AB–72
41*3	• Malfunction stored in memory	AB–74

HINT:

*1 When the airbag warning light remains lit up and the diagnostic code is the normal code, this means a source voltage drop.

*2 Code 22 is recorded when a malfunction occurs in the airbag warning light system.
If an open malfunction occurs in the airbag warning light system, the airbag warning light does not light up, so that until the malfunction is repaired, the diagnostic codes (including code 22) cannot be confirmed.

*3 When a malfunction occurs in the airbag system, malfunction codes 11 to 31 are output. After repairing the malfunction indicated by malfunction codes 11 to 31, codes 11 to 31 are cleared from the memory, but code 41 is output instead.
Once the malfunction has been detected, the airbag warning light will remain lit up until code 41 is cleared, even though the malfunction has been repaired.

Problem Symptom Chart

Proceed with troubleshooting of each circuit in the table below.

Problem Symptom	Inspection Item	Page
• With the ignition switch at ACC or ON, the airbag warning light sometimes light up after approx. 6 seconds have elapsed. • Airbag warning light lights up even when ignition switch is in the LOCK position.	• Airbag warning light system (Always lit up)	AB–76
• Diagnostic code not displayed. • Diagnostic code continuously displayed.	• Te terminal circuit	AB–78

RELEASE METHOD OF AIRBAG ACTIVATION PREVENTION MECHANISM

An airbag activation prevention mechanism is built into the connector for the squib circuit of the airbag system. When release of the airbag activation prevention mechanism is directed in the trou–bleshooting procedure, as shown in the illustration of the connectors (1) and (D below, insert paper which is the same thickness as the male terminal, between the terminal and the short spring.

CAUTION:

- **NEVER RELEASE the airbag activation prevention mechanism on the steering wheel, pad connector.**

NOTICE:

- **Do not release the airbag activation prevention mechanism unless specifically directed by the troubleshooting. procedure.**
- **If the paper inserted is too thick the terminal and short spring may be damaged, so always use paper the same thickness as the male terminal.**

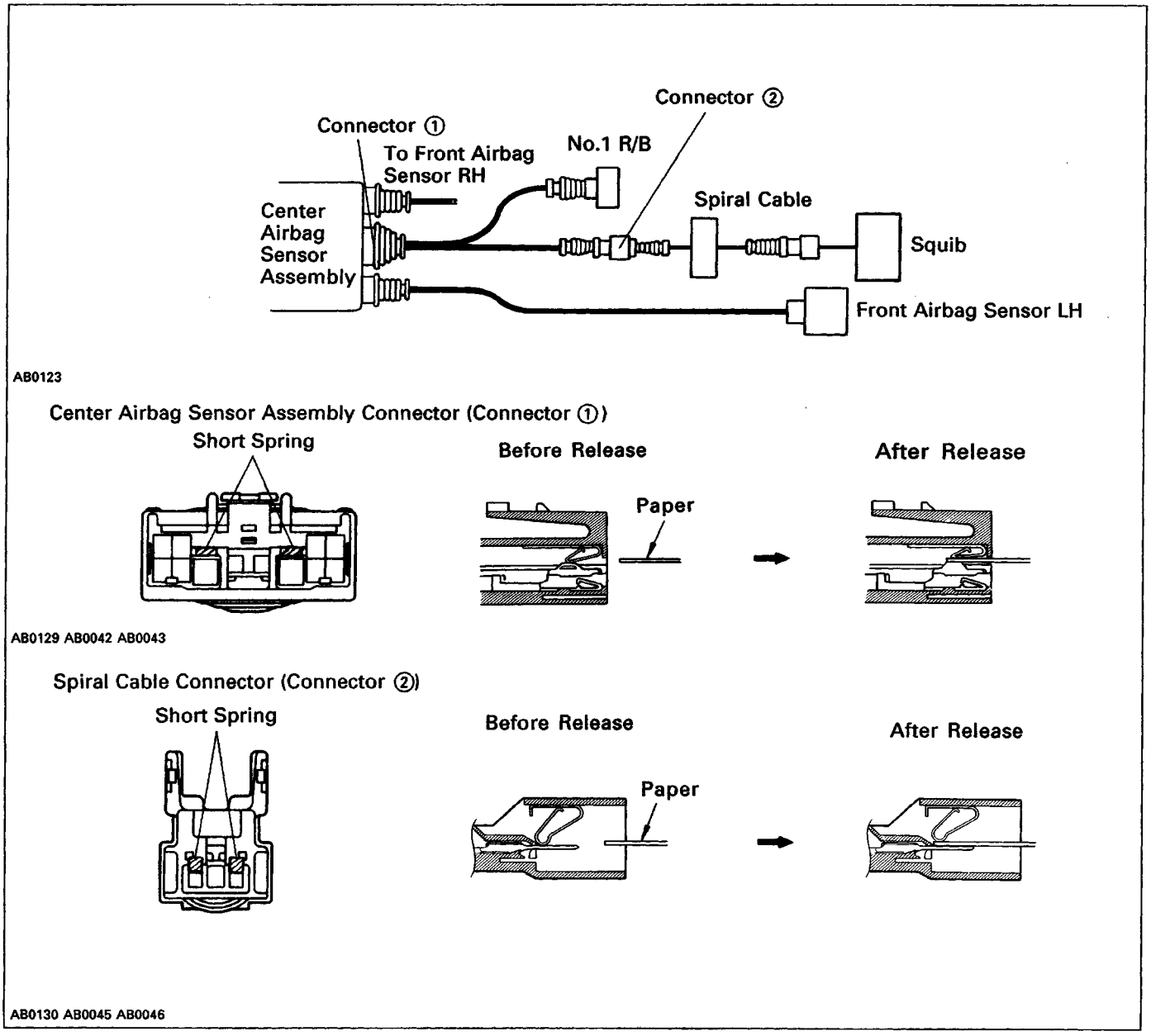

Symptom Simulation

“Intermittent troubles or problems” are the malfunctions about which the customer has a complaint, but which do not occur and can not be confirmed in the workshop. The intermittent problems also include complaints about the airbag warning light going on and off erratically.
The self–diagnostic system stores the circuit of the intermittent problem in memory even if the ignition switch is turned off.
And, for accurate diagnosis of the problems, ask the customer to obtain information as much as possible following the customer problem analysis check sheet (See page AB–29), and try to reproduce the inter–mittent problem.
The problem simulation methods described below are the effective ways for this nature of problem tc produce the problem conditions by applying vibration, heat, and humidity.

1 VIBRATION METHOD: When vibration seems to be the major cause.

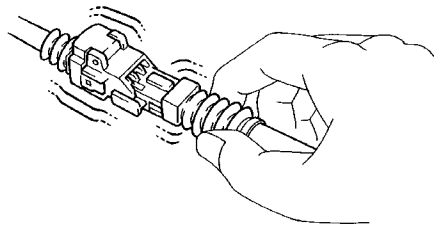
AB0245

CONNECTORS
Slightly shake the connector vertically and horizontally.

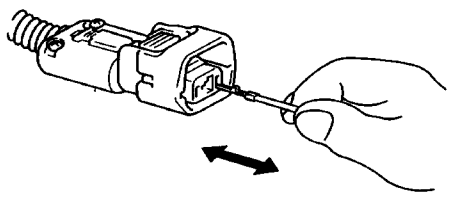
R02966

(Inspection of connectors)
(a) Does the wire harness connecting with its corre–sponding part have insufficient slack?
(b) Are the terminals dirty?
(c) Are the terminal making loose contact due to ter–minals spread?

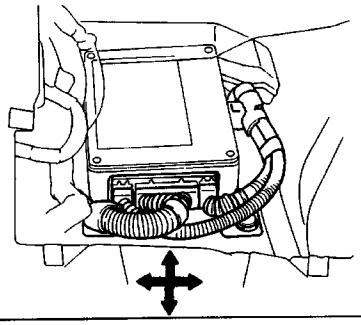
AB0283

WIRE HARNESS
Slightly shake the wire harness vertically and horizon–tally. The connector joint, fulcrum of the vibration, and body through portion are the major areas to be checked thoroughly.

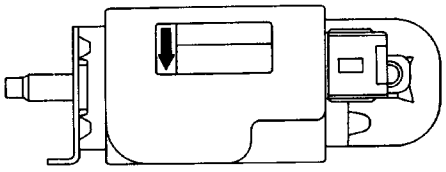
AB0255

PARTS AND SENSORS
Apply vibration slightly by a finger to the part or sensor considered to be the problem cause and check if the malfunction will occur.
CAUTION: Do not apply vibration to the center airbag sensor.

2 HEAT METHOD: When the problem seems to occur when the suspect area is heated.

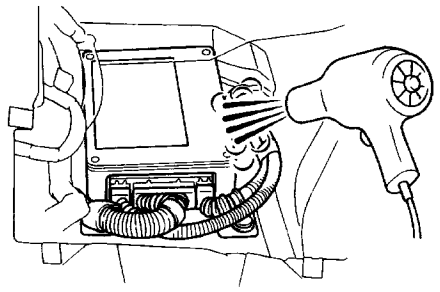
AB0273

Heat the component that is likely the cause of the mal–function with a hair dryer or similar object. Check to see if the malfunction will occur.

NOTICE:

- **Do not heat to more than 60˚C (140˚F) (Temperature limit that the component can be touched with a hand.)**
- **Do not apply heat directly to part in the ECU.**

3 WATER SPRINKLING METHOD: When the malfunction seems to occur on a rainy or in a high–humidity condition.


AB0274

Sprinkle water onto the vehicle and check to see if the malfunction will occur.

NOTICE: Never apply water directly onto the elec–tronic components.

HINT:

- If a vehicle is subject to water leakage, the leaked water may contaminate the ECU. When testing a vehicle with a water leakage problem, special cau–tion must be paid.

4 OTHER: When a malfunction seems to occur when electrical load is excessive.

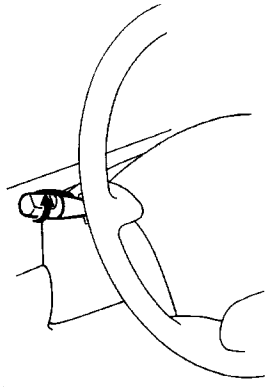
AB0234

Turn on all electrical loads including the heater blower, headlights, rear window defogger, etc. and check to see if the malfunction will occur.

Tc Terminal Circuit

CIRCUIT DESCRIPTION

By connecting terminals Tc and E1 of the check connector, the center airbag sensor assembly is set in the diagnostic code output mode. The diagnostic codes are displayed by the blinking of the airbag warning light.

DIAGNOSTIC CHART

Troubleshooting for this system is different depending on whether the diagnostic code is not displayed or is continuously displayed. Confirm the problem symptoms first before selecting the appropriate troubleshooting procedure.

HINT: If the diagnostic code is not displayed, perform the following troubleshooting:

Check voltage between terminals Tc OK

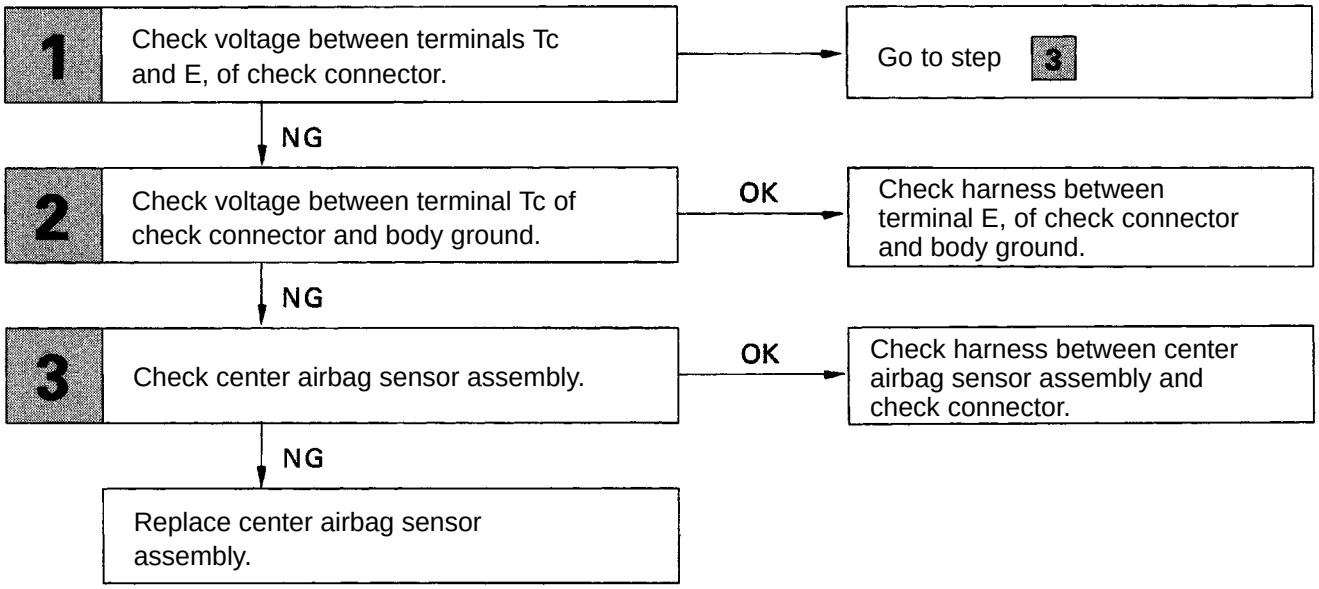

HINT: If the diagnostic code is continuously displayed, perform the following troubleshooting:

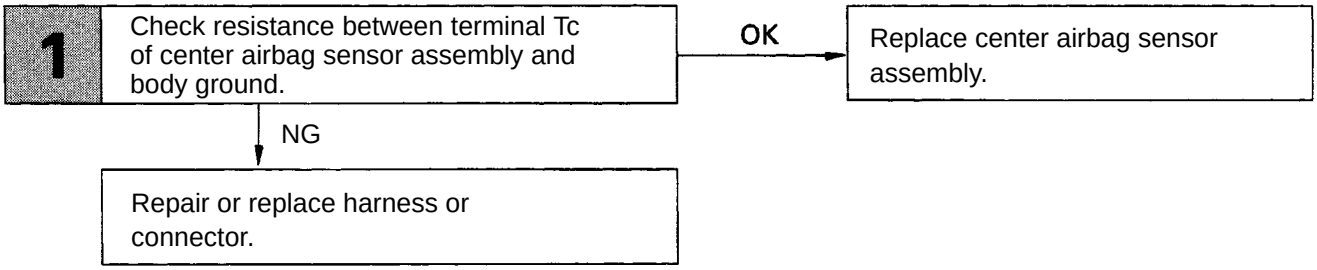

DIAGNOSTIC CHART

WIRING DIAGRAM

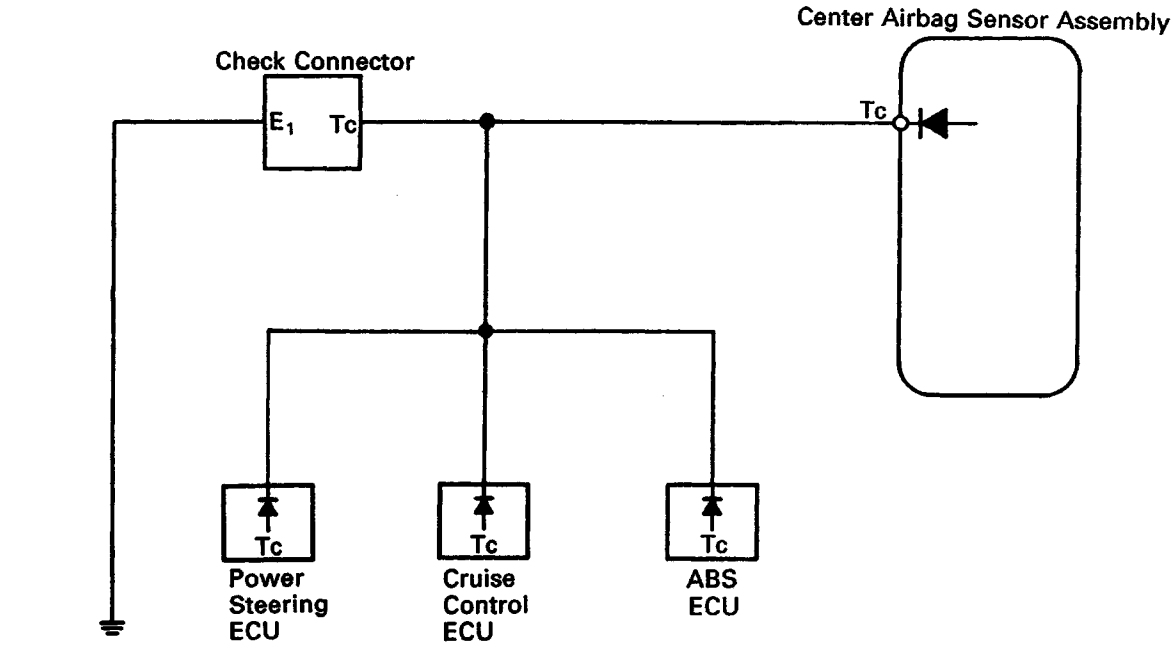

AB0291

P Preparation C Check

HiNT: If the diagnostic code is not displayed, perform the following troubleshooting:

1 Check voltage between terminals Tc and E1 of check connector.

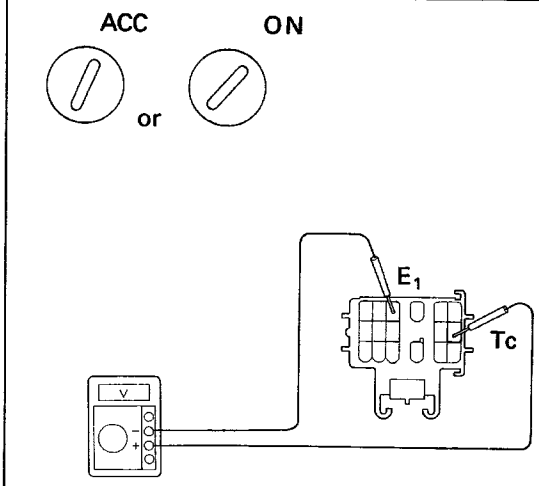

AB0118 AB0119
AB0221

P Turn ignition switch ACC or ON.

C Measure voltage between terminals Te and E¿ of check connector.

OK **Voltage: Battery voltage**

NG

OK 〉 Go to step 3.

2 Check voltage between terminal Tc of check connector and body ground.

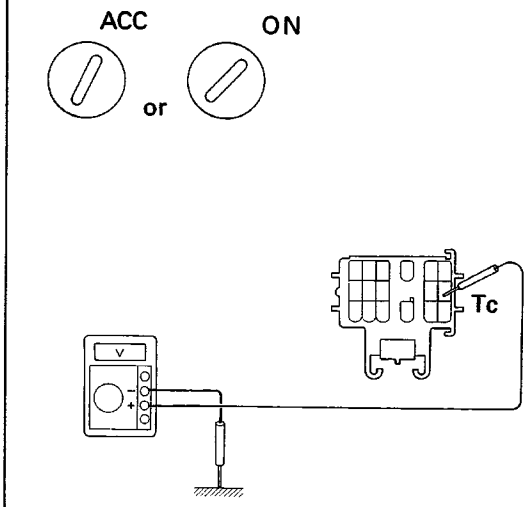

AB0118 AB0119
AB0222

C Measure voltage between terminal Tc of check connector and body ground.

OK **Voltage: Battery voltage**

NG

OK 〉 **Check harness between terminal E1 of check connector and body ground.**

3 Check center airbag sensor assembly.



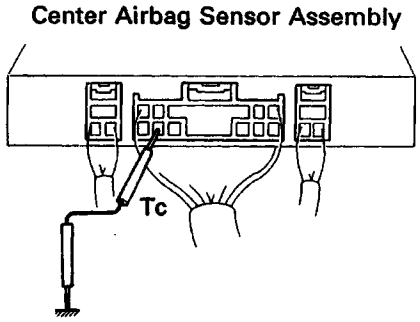

AB0118 AB0119
AB0118

P Using a service wire, connect terminal Te of center airbag sensor assembly connector to body ground.

C Check operation of airbag warning light.

OK **Airbag warning light comes on.**

NG

OK **Check harness between center airbag sensor assembly and check connector.**

Replace center airbag sensor assembly.

HINT: If the diagnostic code is continuously displayed, perform the following troubleshooting.

1 Check resistance between terminal Tc of center airbag sensor assembly and body ground.

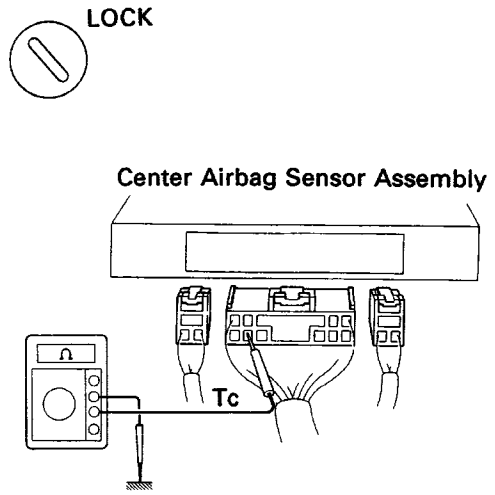

P (1) Turn ignition switch LOCK.
(2) Disconnect center airbag sensor assembly connector.

C Check resistance between terminal Tc of center airbag sensor assembly and body ground.

OK **Resistance: ∞ Ω**

NG

Repair or replace harness or connector.

OK

Replace center airbag sensor assembly.

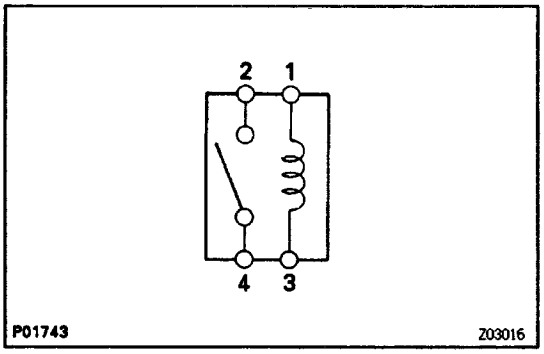

4. INSPECT STARTER RELAY

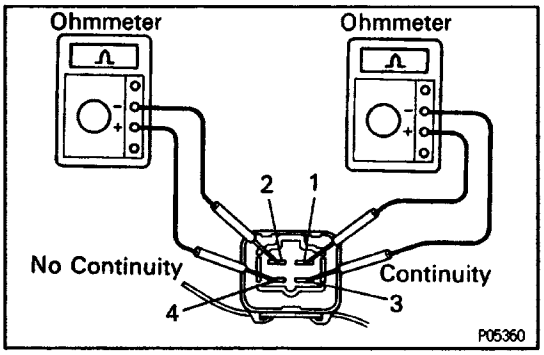

A. Inspect relay continuity

(a) Using an ohmmeter, check that there is continuity between terminals 1 and 3.

(b) Check that there is no continuity between terminals 2 and 4.

If continuity is not as specified, replace the relay.

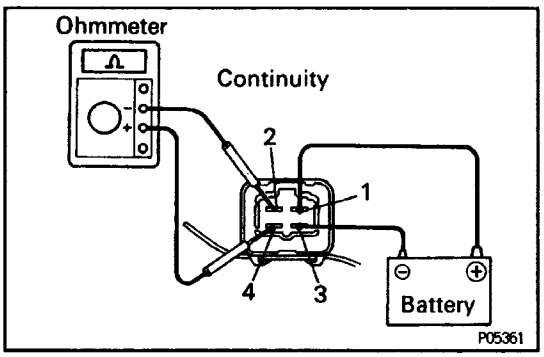

6. Inspect relay operation

(a) Apply battery voltage across terminals 1 and 3.

(b) Using an ohmmeter, check that there is continuity between terminals 2 and 4.

If operation is not as specified, replace the relay.

5. REINSTALL STARTER RELAY

6. REINSTALL LUGGAGE COMPARTMENT FLOOR MAT

7. RECONNECT CABLE TO NEGATIVE TERMINAL OF BATTERY

CLUTCH START SWITCH

(See MX section)

ST013-01

PARK/NEUTRAL SWITCH (PNS)

(See AX section)

ST014-01

STARTING SYSTEM

DESCRIPTION

The starter is a reduction type with a small, high–speed motor used to drive the pinion gear.

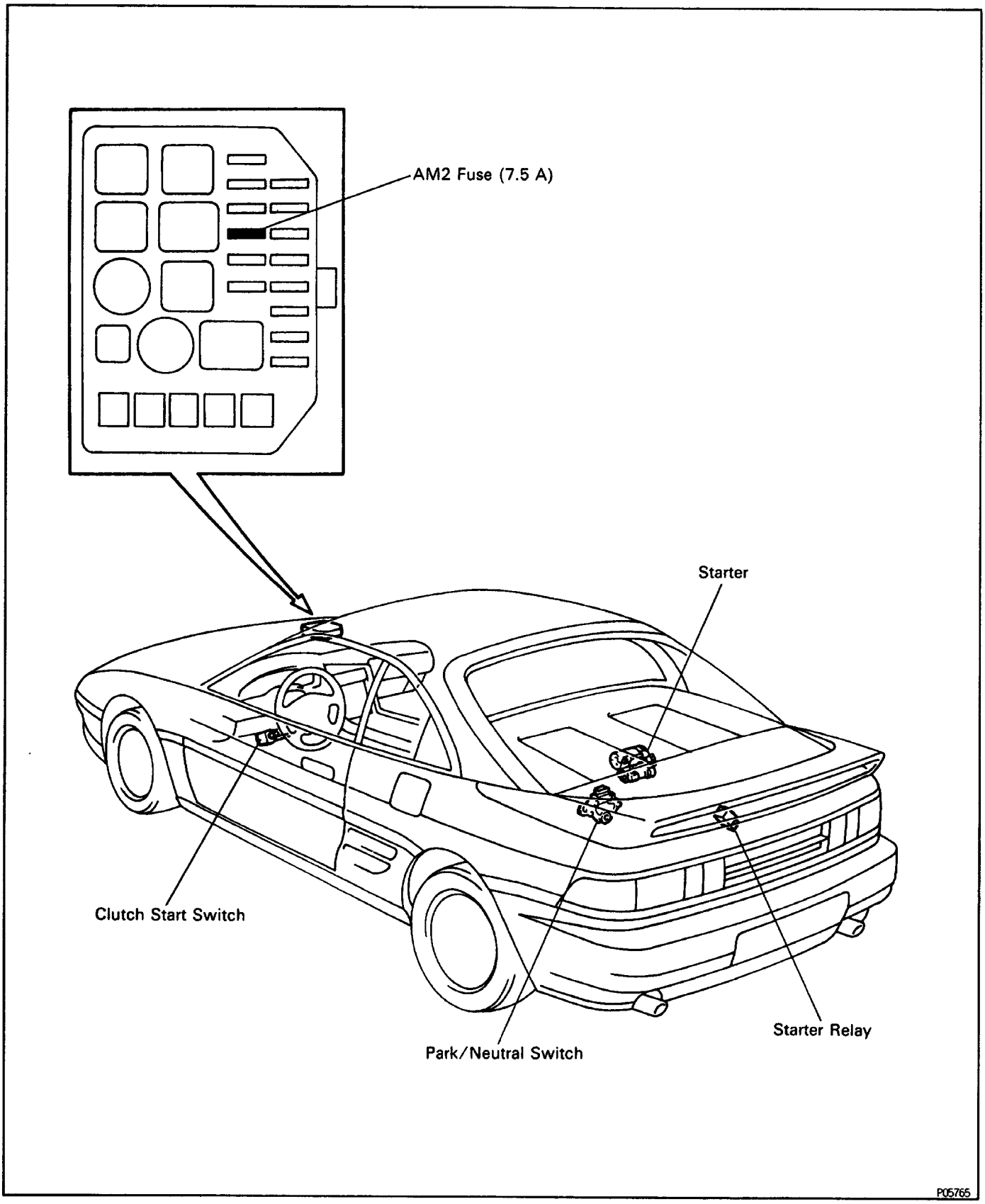

SYSTEM CIRCUIT

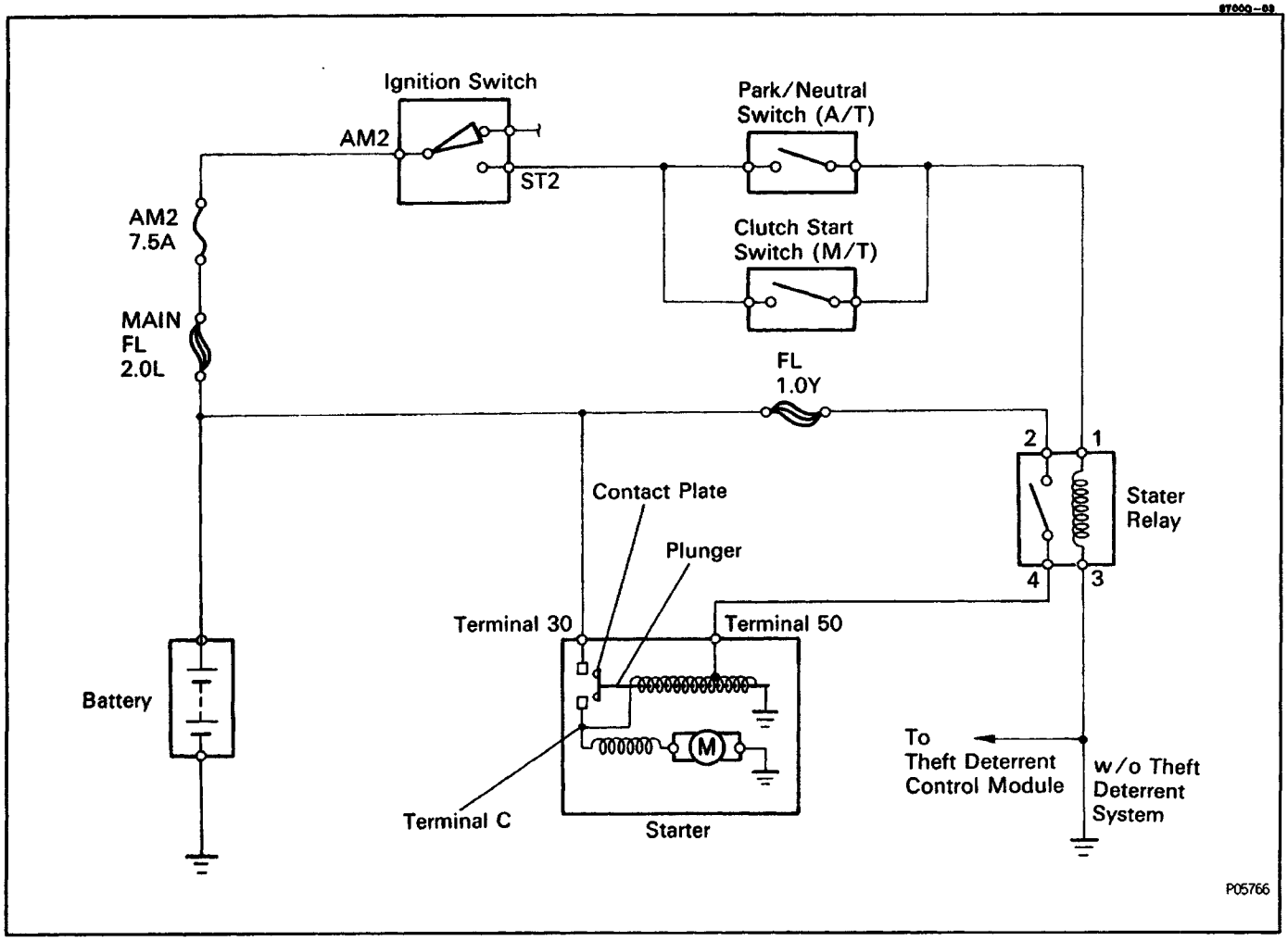

OPERATION

When the ignition switch is turned to START position, current flows from terminal 50 to the coil of the solenoid and the plunger is pulled by the magnetic force of the coil. When the plunger is pulled to the left as shown above, the contact plate of the plunge allows current from the battery to flow directly from terminal 30 to the motor, and the starter rotates.

When the engine is running and the ignition switch is returned to ON, the magnetic force of the coil disappears and the contact plate of the plunger is returned to its original position by the return spring. Battery voltage no longer flows from terminal 30, so the motor stops.

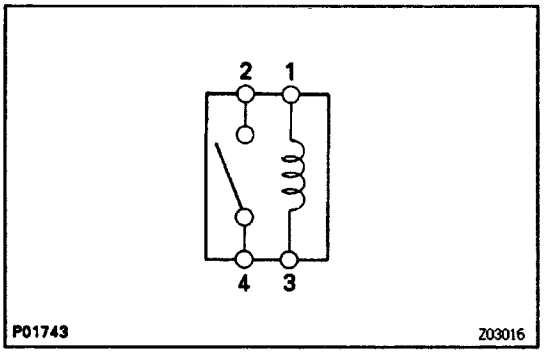

4. INSPECT STARTER RELAY

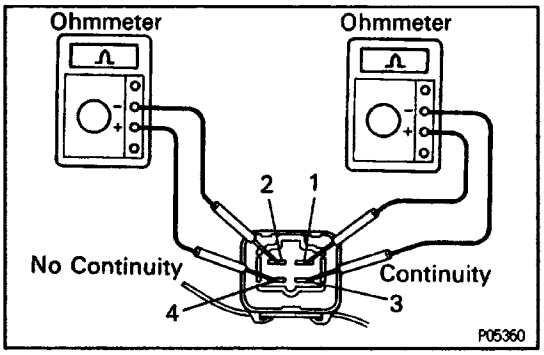

A. Inspect relay continuity

(a) Using an ohmmeter, check that there is continuity between terminals 1 and 3.

(b) Check that there is no continuity between terminals 2 and 4.

If continuity is not as specified, replace the relay.

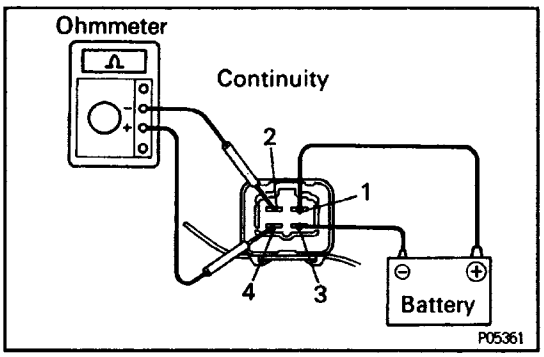

6. Inspect relay operation

(a) Apply battery voltage across terminals 1 and 3.

(b) Using an ohmmeter, check that there is continuity between terminals 2 and 4.

If operation is not as specified, replace the relay.

5. REINSTALL STARTER RELAY

6. REINSTALL LUGGAGE COMPARTMENT FLOOR MAT

7. RECONNECT CABLE TO NEGATIVE TERMINAL OF BATTERY

CLUTCH START SWITCH

(See MX section)

ST013-01

PARK NEUTRAL SWITCH (PNS)

(See AX section)

ST014-01

PREPARATION

SST (SPECIAL SERVICE TOOLS)

ST00S–03

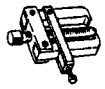	09286–46011 Injection Pump Spline Shaft Puller	Armature bearing
	09285–76010 Injection Pump Camshaft Bearing Cone Replacer	Armature front bearing for conventional type
	09820–00030 Alternator Rear Bearing Replacer	Armature front bearing for compact type

RECOMMENDED TOOLS

ST00T–01

	09082–00015 TOYOTA Electrical Tester	

EQUIPMENT

ST00U–01

Dial indicator	Commutator
Magnetic finger	
Pull scale	Brush spring
Sandpaper	Commutator
Torque wrench	
V–block	
Vernier calipers	Commutator, Brush

SERVICE SPECIFICATIONS

ST015–09

SERVICE DATA

Starter	Rated voltage and output power	12 V 1.4 kW, 12 V 1.6 kW
	No–load characteristics (Current)	90 A or less at 11. 5 V
	No–load characteristics (rpm)	3,000 rpm or more (Compact type) 3,500 rpm or more (Conventional type)
	Brush length (STD)	15.0 mm (0.591 in.)
	Brush length (Minimum)	10.0 mm (0.394 in.)
	Spring installed load	18 – 24 N (1.79 – 2.41 kgf, 3.9 – 5.3 lbf)
	Commutator	
	Diameter (STD)	30 mm (1.18 in.)
	Diameter (Minimum)	29 mm (1.14 in.)
	Undercut depth (STD)	0.6 mm (0.024 in.)
	Undercut depth (Minimum)	0.2 mm (0.008 in.)
	Circle runout (Maximum)	0.05 mm (0.0020 in.)

ST016–01

TORQUE SPECIFICATIONS

Part tightened	N·m	kgf·cm	ft·lbf
Starter mounting bolt	39	400	29

STARTER

ST00W–04

COMPONENTS FOR REMOVAL AND INSTALLATION (3S–GTE)

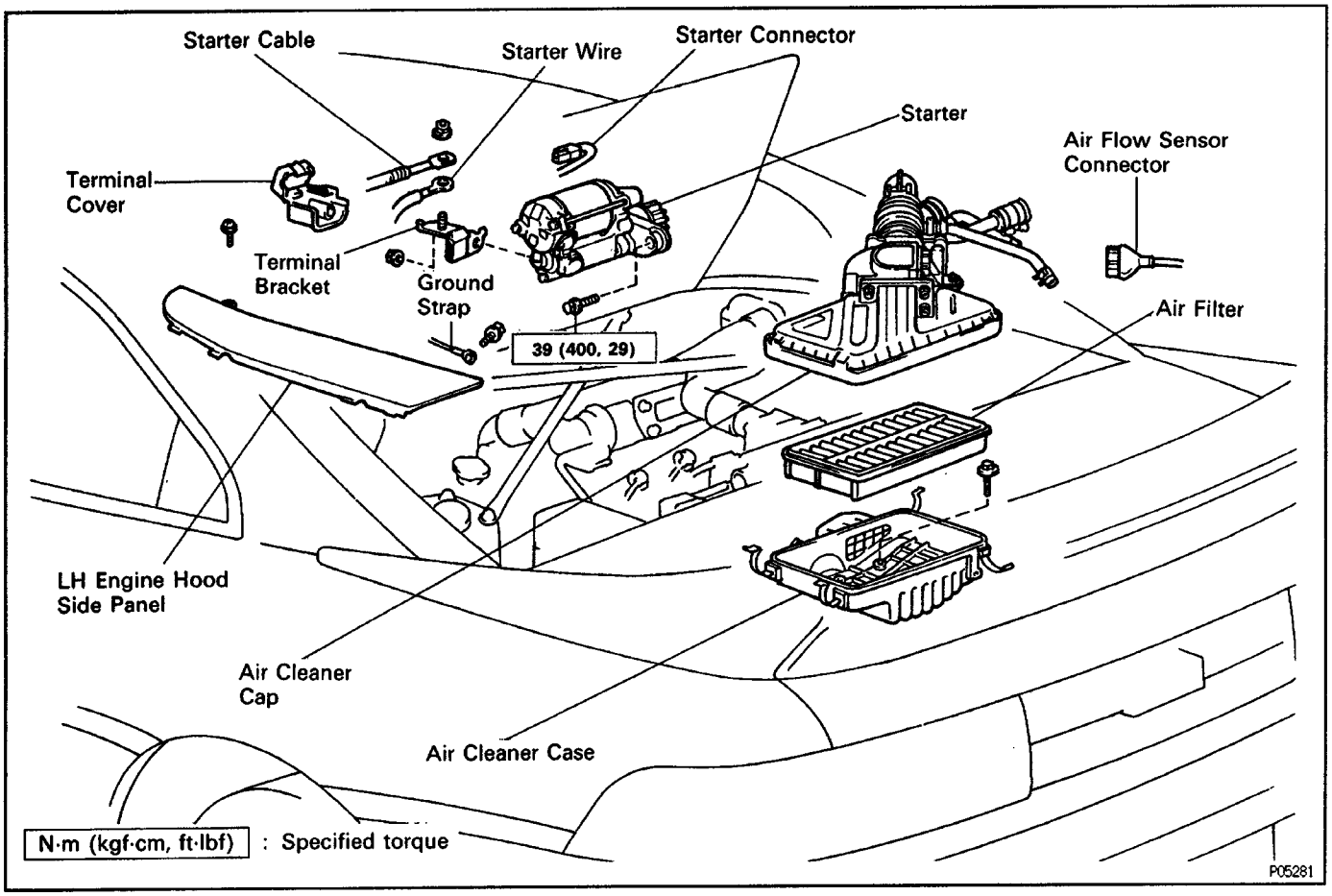

ST028–01

STARTER REMOVAL (3S–GTE)

(See Components for Removal and Installation)

1. DISCONNECT CABLE FROM NEGATIVE TERMINAL OF BATTERY

CAUTION: Turn the ignition switch to "LOCK". Disconnect the negative terminal from the battery. Wait at least 20 seconds before proceeding with work.

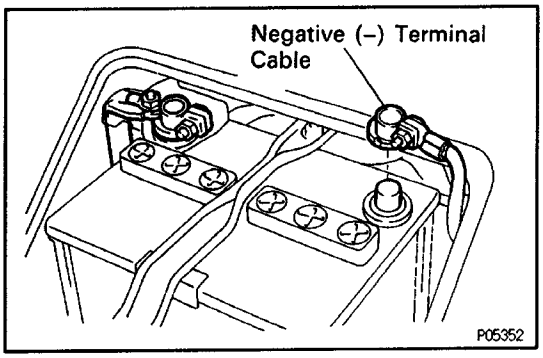

2. REMOVE LH ENGINE HOOD SIDE PANEL

3. REMOVE AIR CLEANER HOUSING

(a) Disconnect the air flow sensor connector.

(b) Disconnect the following hoses:

(1) Air cleaner hose from turbocharger

(2) PCV hose from cylinder head cover

(3) Air hose from No.2 air hose

(4) Air hose from air by–pass valve

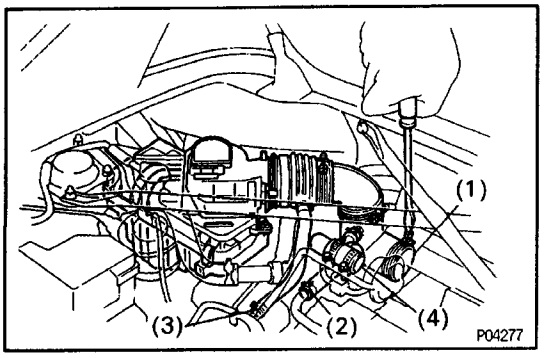

(c) Disconnect the four clamps, and remove the air cle–aner cap and air flow sensor assembly.
(d) Remove the air filter.
(e) Remove the three bolts and air cleaner case.

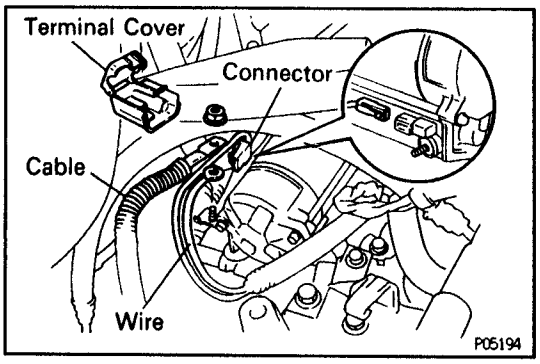

4. REMOVE STARTER

(a) Remove the terminal cover.
(b) Disconnect the starter connector.
(c) Remove the nut, and disconnect the starter and cable and wire.

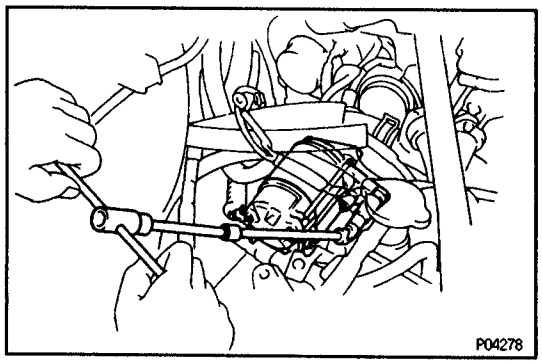

(d) Remove the two bolts and starter.

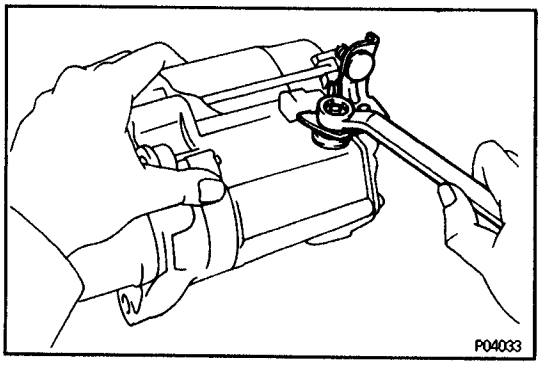

(e) Remove the nut and terminal bracket from the starter.

ST00W–05

COMPONENTS FOR REMOVAL AND INSTALLATION (5S–FE)

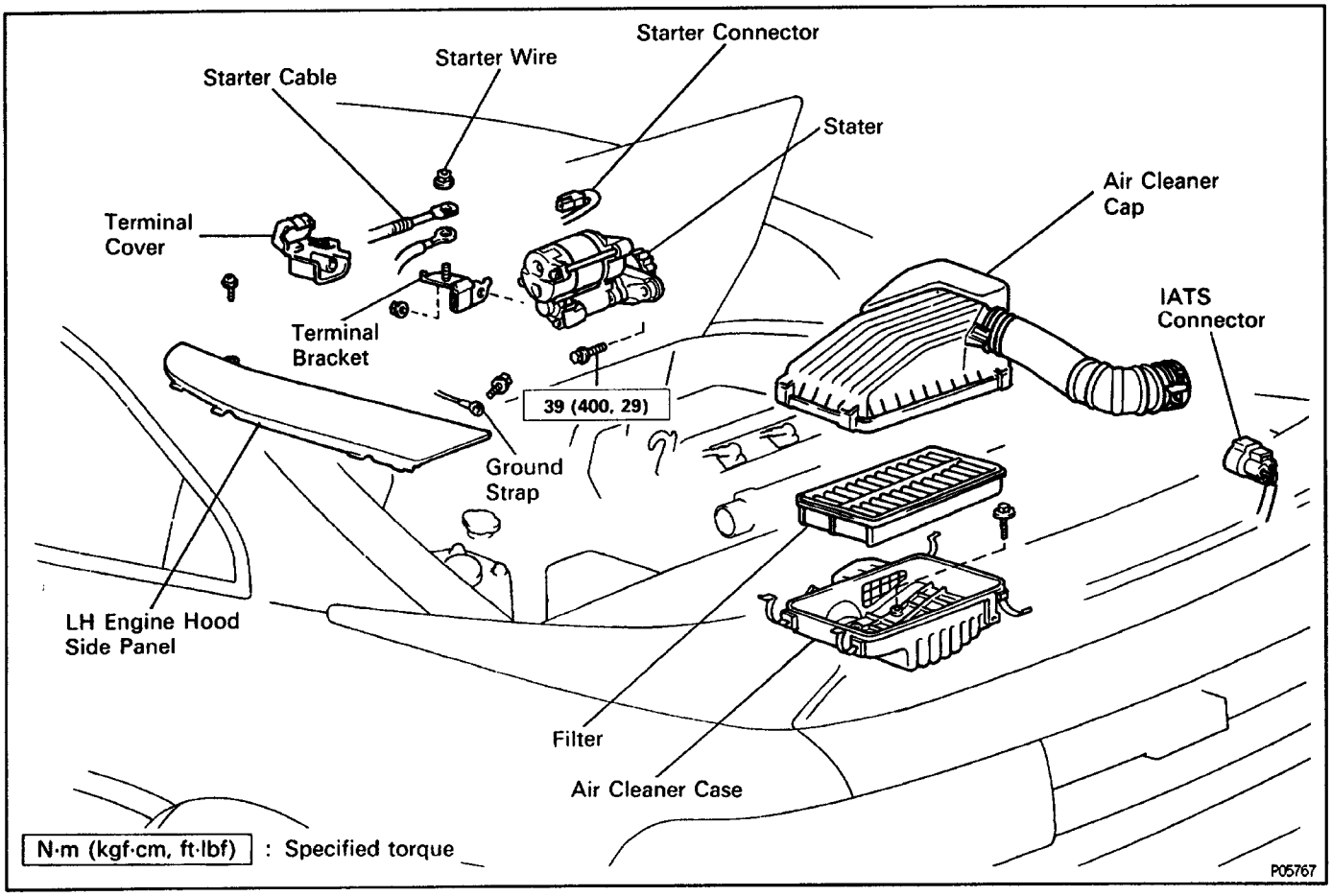

ST02T–01

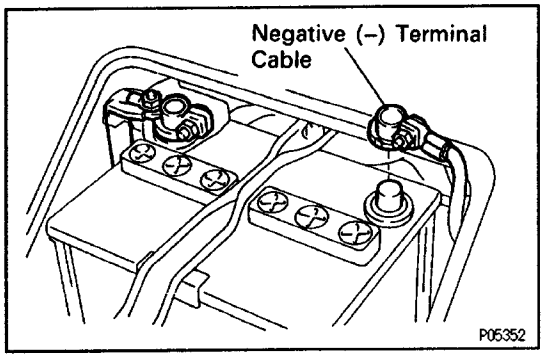

STARTER REMOVAL (5S–FE)

(See Components for Removal and Installation)

1. DISCONNECT CABLE FROM NEGATIVE TERMINAL OF BATTERY

CAUTION: Turn the ignition switch to "LOCK". Disconnect the negative terminal from the battery. Wait at least 20 seconds before proceeding with work.

2. REMOVE LH ENGINE HOOD SIDE PANEL

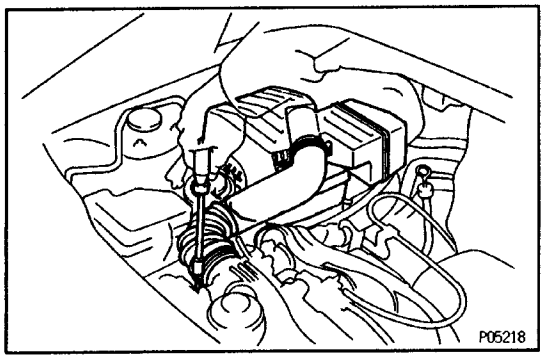

3. REMOVE AIR CLEANER HOUSING

(a) Disconnect the IATS connector.
(b) Disconnect the air cleaner hose from the throttle body.
(c) Disconnect the four clamps, and remove the air cleaner cap.
(d) Remove the air filter.
(e) Remove the three bolts and air cleaner case.

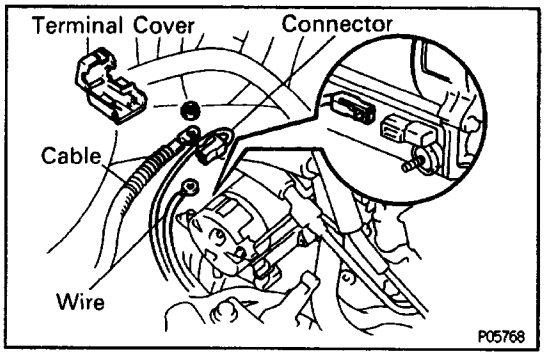

4. REMOVE STARTER

(a) Remove the terminal cover.

(b) Disconnect the starter connector.

(c) Remove the nut, and disconnect the starter cable and wire.

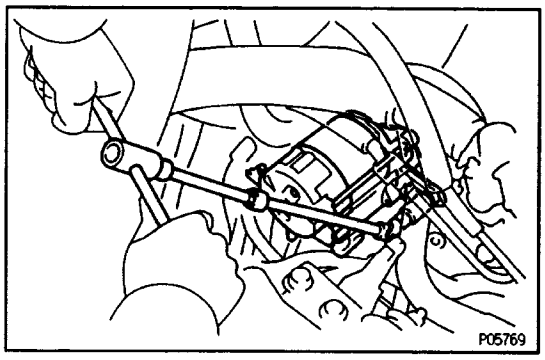

(d) Remove the two bolts and starter.

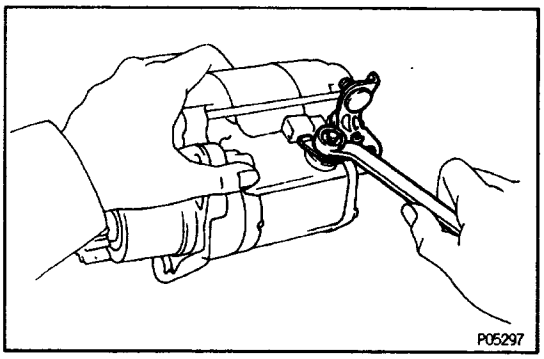

(e) Remove the nut and terminal bracket from the starter.

COMPONENTS FOR DISASSEMBLY AND ASSEMBLY

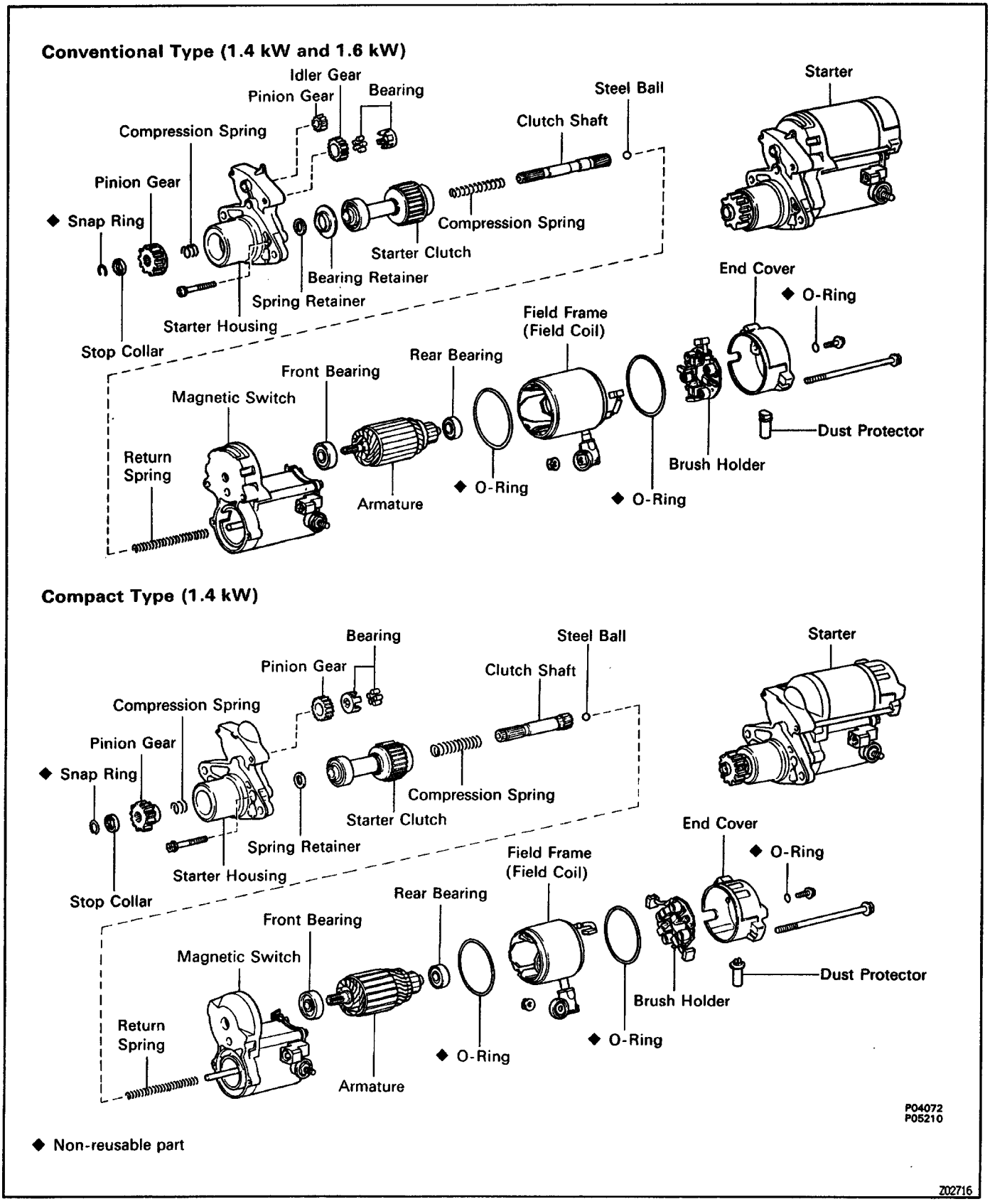

ST02U–01

STARTER DISASSEMBLY

(See Components for Disassembly and Assembly)

1. REMOVE FIELD FRAME AND ARMATURE

(a) Remove the nut, and disconnect the lead wire from the magnetic switch terminal.

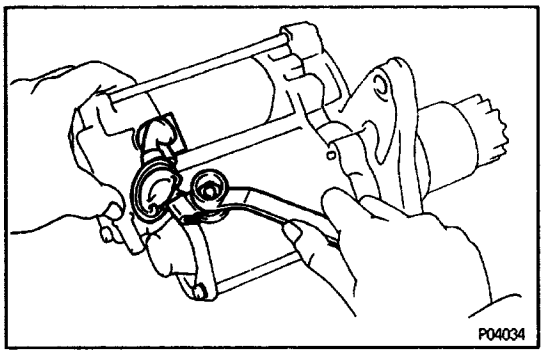

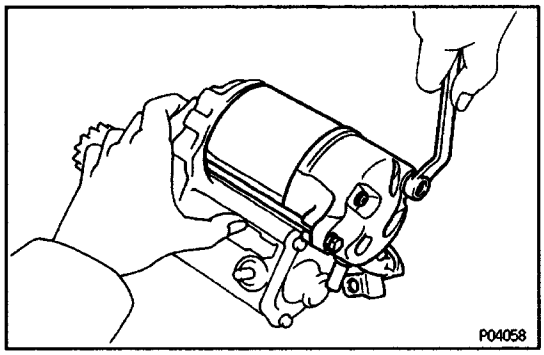

(b) Remove the two through bolts.

(c) Pull out the field frame together with the armature from the magnetic switch.

(d) Remove the O–ring.

2. REMOVE STARTER HOUSING, CLUTCH ASSEMBLY AND GEAR

(a) Remove the two screws.

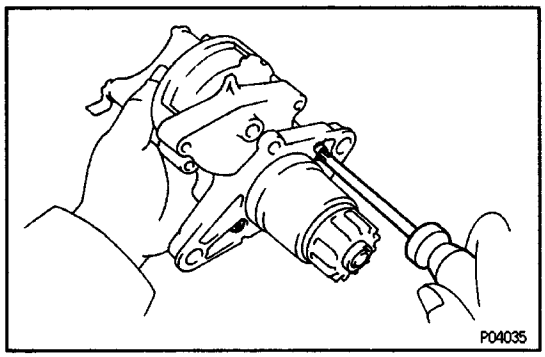

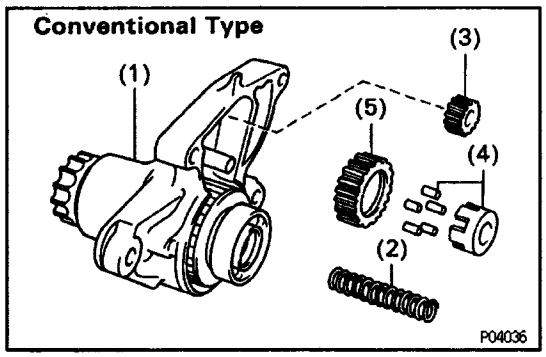

(b) Remove the following parts from the magnetic switch:
(Conventional Type)

(1) Starter housing and clutch assembly
(2) Return spring
(3) Pinion gear
(4) Bearing
(5) Idler gear

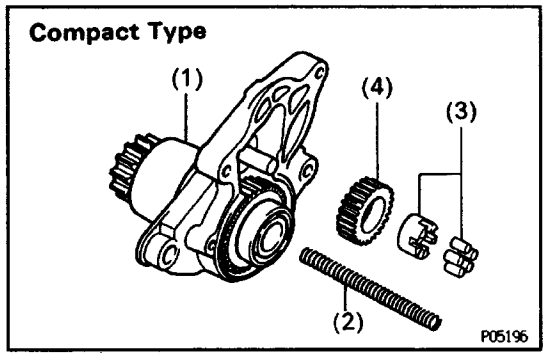

(Compact Type)

(1) Starter housing and clutch assembly
(2) Return spring
(3) Bearing
(4) Idler gear

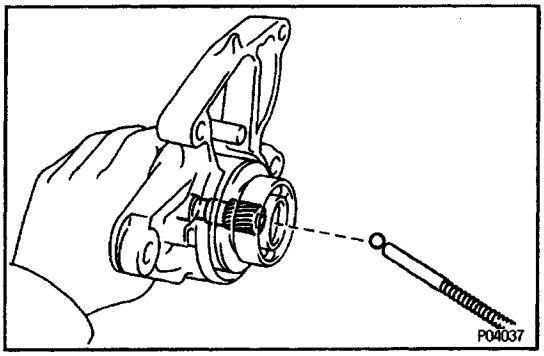

3. REMOVE STEEL BALL

Using a magnetic finger, remove the steel ball from the clutch shaft hole.

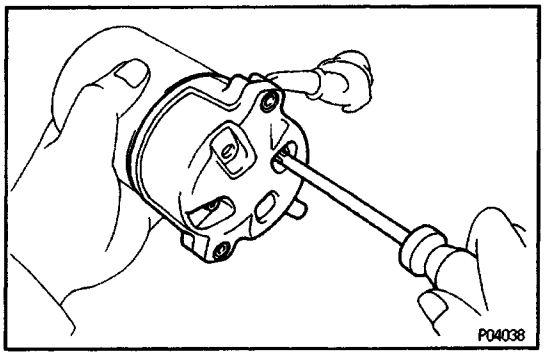

4. REMOVE BRUSH HOLDER

(a) Remove the two screws, two 0– rings and end cover from the field frame.

(b) Remove the O–ring from the field frame.

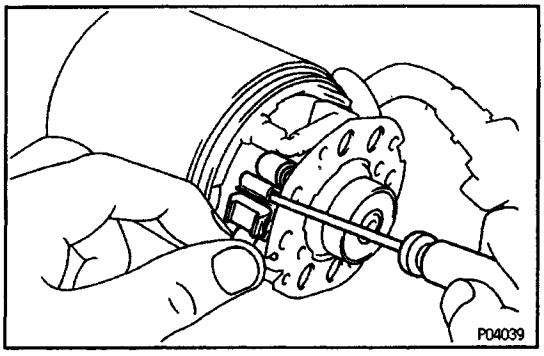

(c) Using a screwdriver, hold the spring back and dis–connect the brush from the brush holder. Disconnect the four brushes, and remove the brush holder.

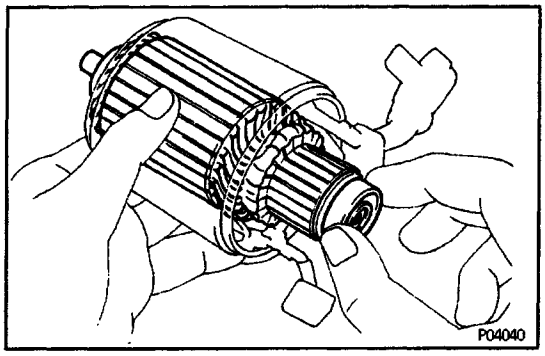

5. REMOVE ARMATURE FROM FIELD FRAME

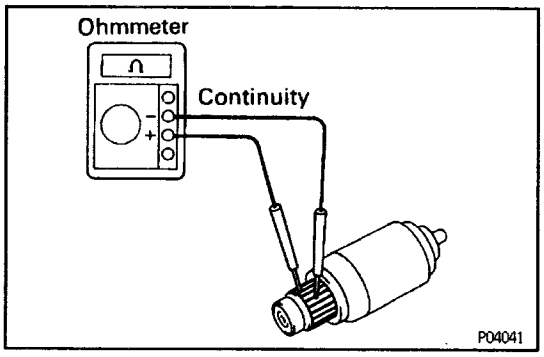

STARTER INSPECTION AND REPAIR ST02V–01

Armature Coil

1. INSPECT COMMUTATOR FOR OPEN CIRCUIT

Using an ohmmeter, check that there is continuity between the segments of the commutator.

If there is no continuity between any segment, replace the armature.

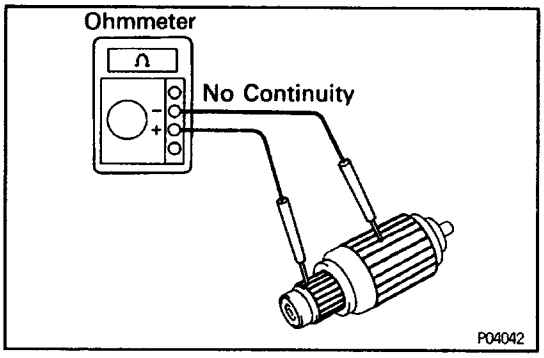

2. INSPECT COMMUTATOR FOR GROUND

Using an ohmmeter, check that there is no continuity between the commutator and armature coil core.

If there is continuity, replace the armature.

Commutator

1. INSPECT COMMUTATOR FOR DIRTY AND BURNT SURFACES

If the surface is dirty or burnt, correct it with sand–paper (No.400) or on a lathe.

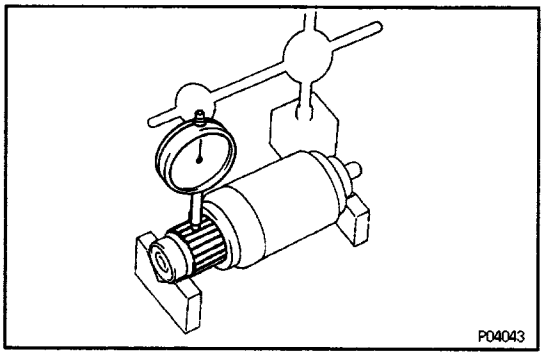

2. INSPECT COMMUTATOR CIRCLE RUNOUT

(a) Place the commutator on V–blocks.

(b) Using a dial gauge, measure the circle runout.

Maximum circle runout:

0.05 mm (0.0020 in.)

If the circle runout is greater than maximum, correct it on a lathe.

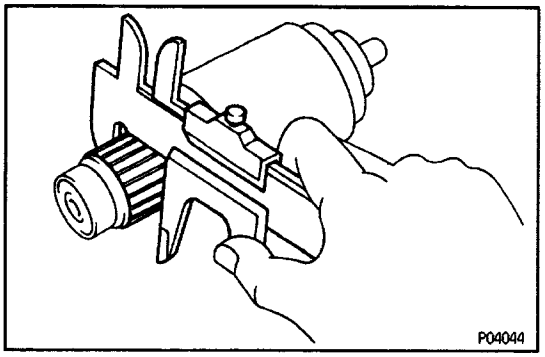

3. INSPECT COMMUTATOR DIAMETER

Using a vernier caliper, measure the commutator di–ameter.

Standard diameter:

30mm(1.18in.)

Minimum diameter:

29 mm (1.14 in.)

If the diameter is less than minimum, replace the armature.

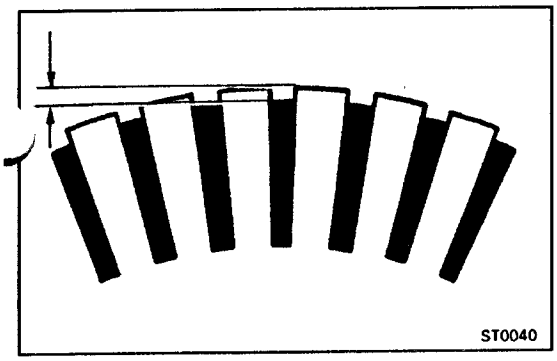

4. INSPECT UNDERCUT DEPTH

Check that the undercut depth is clean and free of foreign materials. Smooth out the edge.

Standard undercut depth:

0.6 mm (0.024 in.)

Minimum undercut depth:

0.2 mm (0.008 in.)

If the undercut depth is less than minimum, correct it with a hacksaw blade.

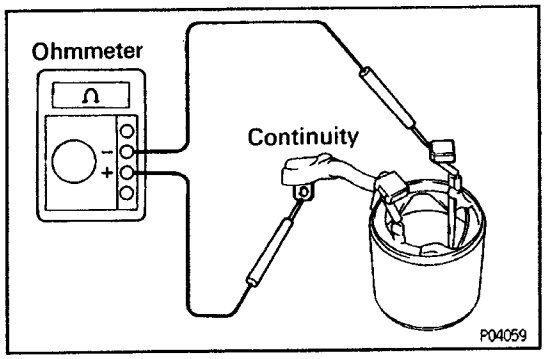

Field Coil (Field frame)

1. INSPECT FIELD COIL FOR OPEN CIRCUIT

Using an ohmmeter, check that there is continuity between the lead wire and field coil brush lead.
If there is no continuity, replace the field frame.

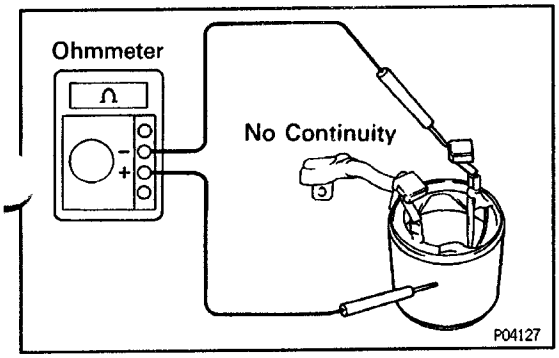

2. INSPECT FIELD COIL FOR GROUND

Using an ohmmeter, check that there is no continuity between the coil end and field frame. If there is continuity, repair or replace the field frame.

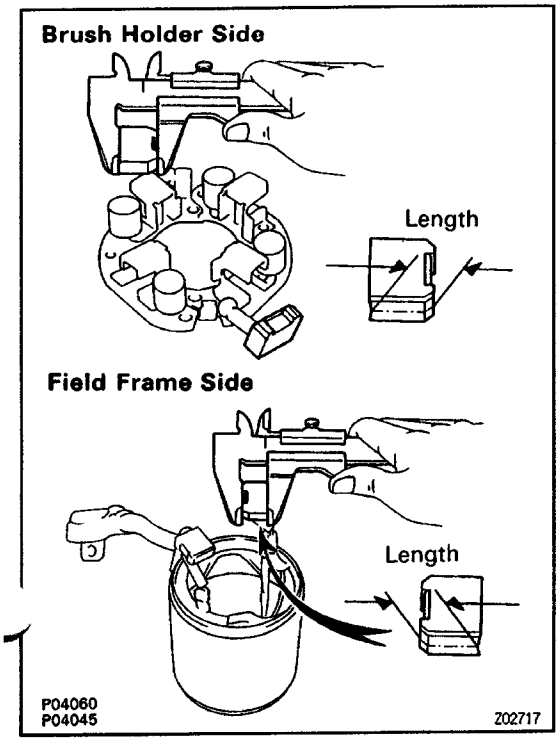

Brushes

INSPECT BRUSH LENGTH

Using a vernier caliper, measure the brush length.

Standard length:

15.0 mm (0.591 in.)

Minimum length:

10.0 mm (0.394 in.)

If the length is less than minimum, replace the brush holder and field frame.

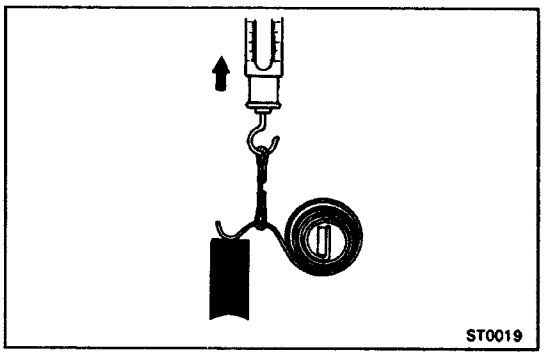

Brush Springs

INSPECT BRUSH SPRING LOAD

Take the pull scale reading the instant the brush spring separates from the brush.

Spring installed load:

18–24N(1.79–2.41kgf,3.9–5.311bf)

If the installed load is not as specified, replace the brush springs.

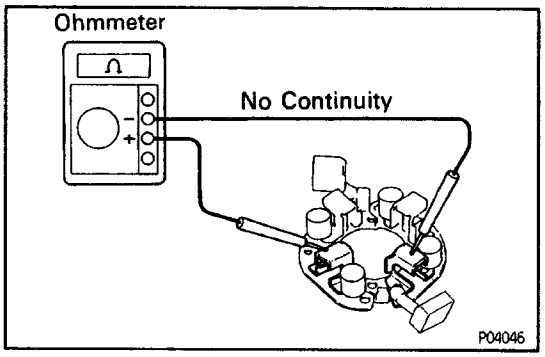

Brush Holder

INSPECT BRUSH HOLDER INSULATION

Using an ohmmeter, check that there is no continuity between the positive (+) and negative (–) brush holders.

If there is continuity, repair or replace the brush holder.

Clutch and Gears

1. INSPECT GEAR TEETH

Check the gear teeth on the pinion gear, idle gear and clutch assembly for wear or damage.

If damaged, replace the gear or clutch assembly.

If damaged, also check the drive plate ring gear for wear or damage.

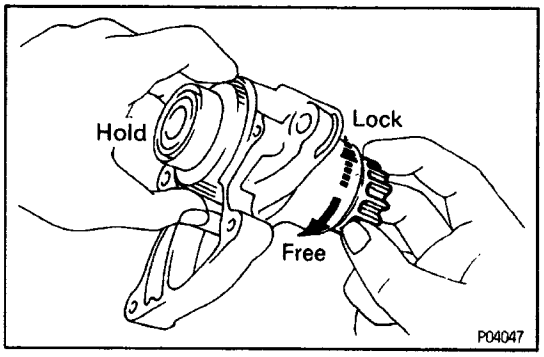

2. INSPECT CLUTCH PINION GEAR

Hold the starter clutch and rotate the pinion gear counterclockwise, and check that it turns freely. Try to rotate, the pinion gear clockwise and check that it locks.

If necessary, replace the clutch assembly.

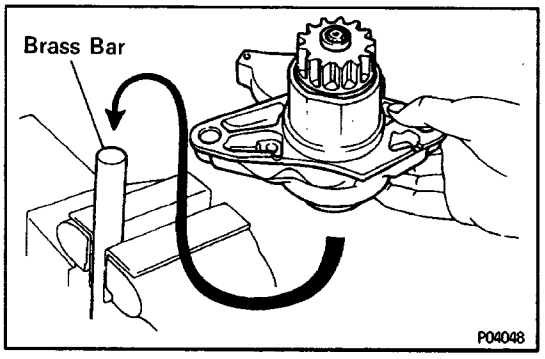

3. IF NECESSARY, REPLACE CLUTCH ASSEMBLY

A. Disassembly of starter housing and clutch assembly

(a) Mount a brass bar in a vise, and install the starter housing and clutch assembly to the brass bar.

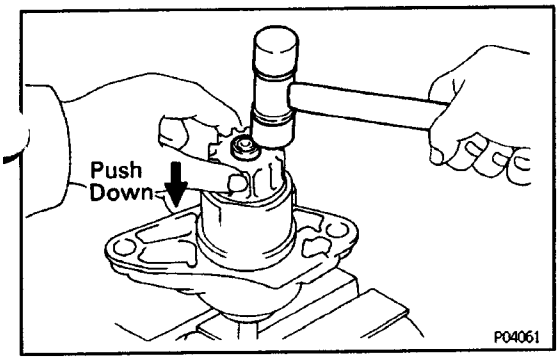

(b) Push down the pinion gear.
(c) Using a plastic–faced hammer, tap down the stop collar.

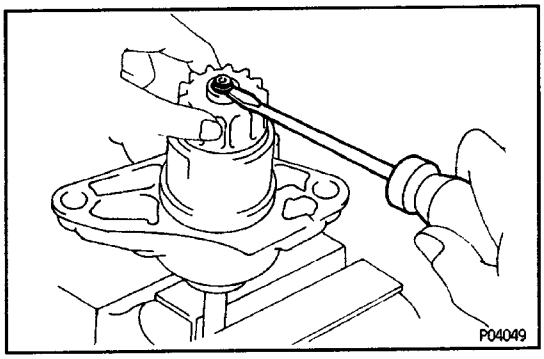

(d) Using a screwdriver, pry out the snap ring.

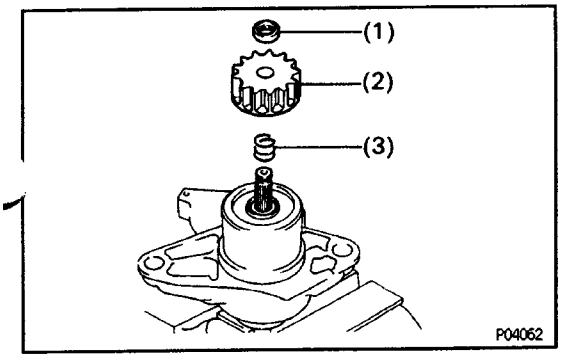

(e) Remove the following parts:
(1) Stop collar
(2) Pinion gear
(3) Compression spring

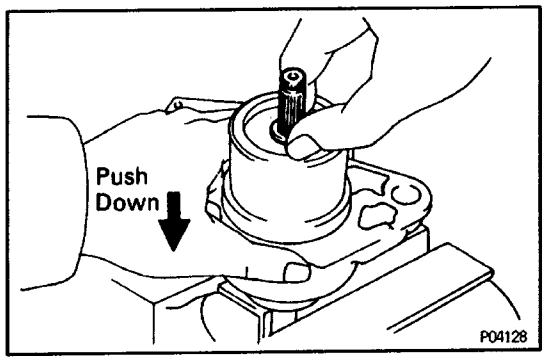

(f) Push down the starter housing, and remove the spring retainer.

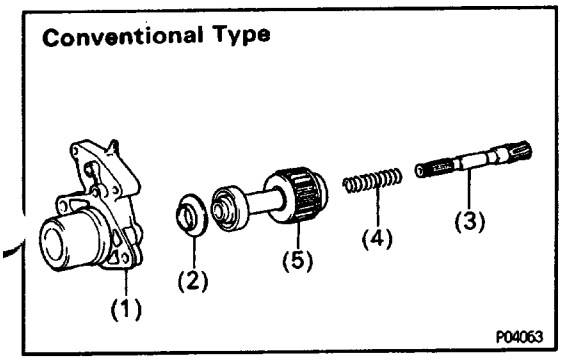

(g) Disassemble the following parts:
(Conventional Type)
(1) Starter housing
(2) Bearing retainer
(3) Starter clutch
(4) Compression spring
(5) Clutch shaft

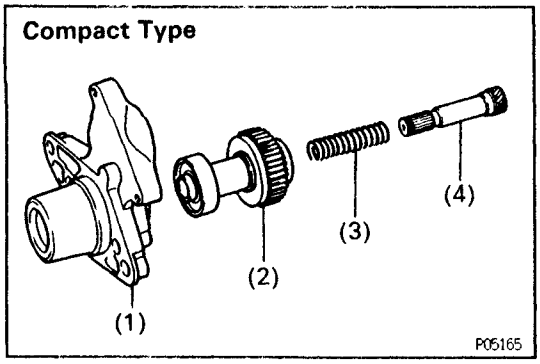

(Compact Type)
(1) Starter housing
(2) Starter clutch
(3) Compression spring
(4) Clutch shaft

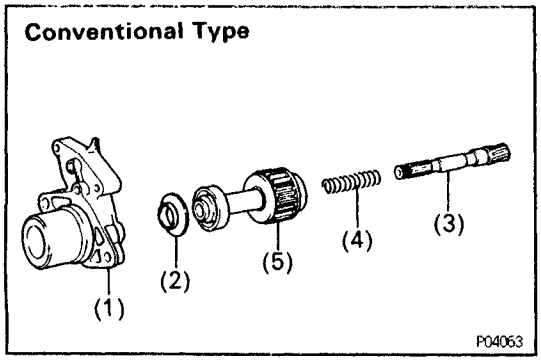

B. Assemble starter housing and clutch assembly

(a) Assemble the following parts:
(Conventional Type)
(1) Starter housing
(2) Bearing retainer
(3) Starter clutch
(4) Compression spring
(5) Clutch shaft

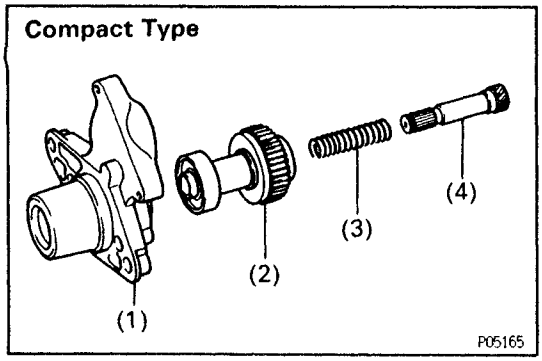

(Compact Type)
(1) Starter housing
(2) Starter clutch
(3) Compression spring
(4) Clutch shaft

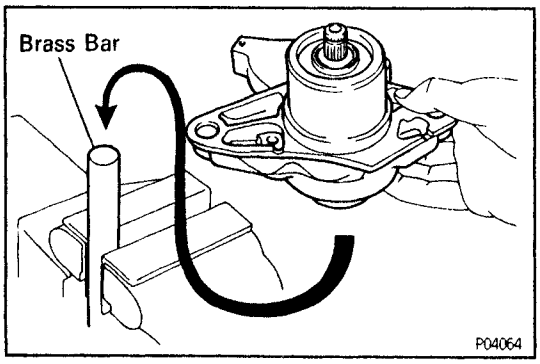

(b) Mount a brass bar in a vise, install the starter housing and clutch assembly to the brass bar.

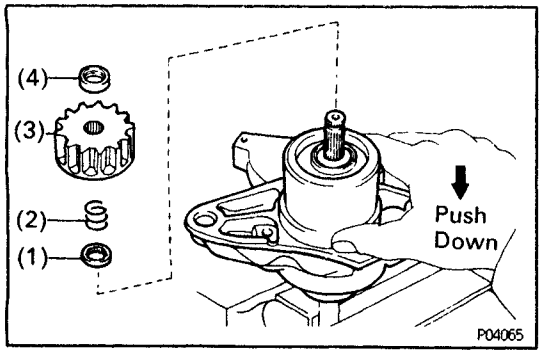

(c) Push down the starter housing, and install the fol–lowing parts:
(1) Spring retainer
(2) Compression spring
(3) Pinion gear
(4) Stop collar

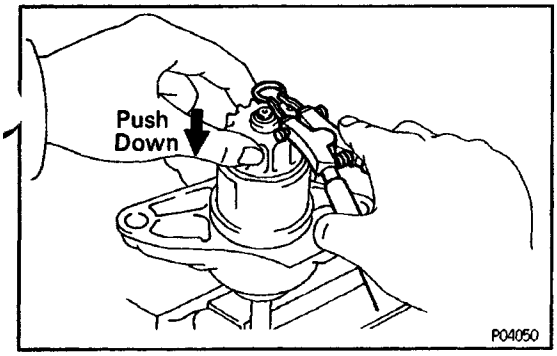

(d) Push down the pinion gear.
(e) Using snap ring pliers, install a new snap ring.

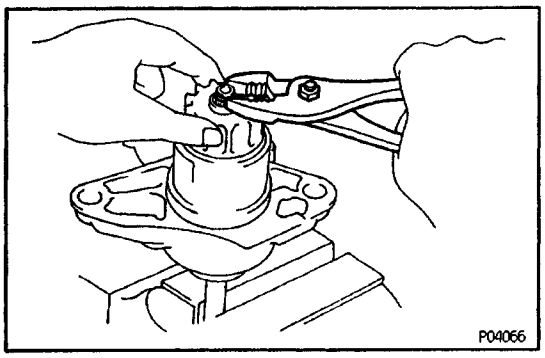

(f) Using pliers, compress the snap ring.
(g) Check that the snap ring fits correctly.

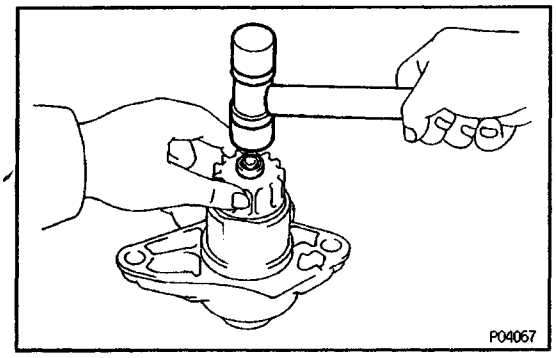

(h) Remove the starter housing and clutch assembly from the brass bar.
(i) Using a plastic–faced hammer, tap the clutch shaft and install the stop collar onto the snap ring.

Bearings

1. INSPECT FRONT BEARING

Turn each bearing by hand while applying inward force.

If resistance is felt or the bearing sticks, replace the bearing.

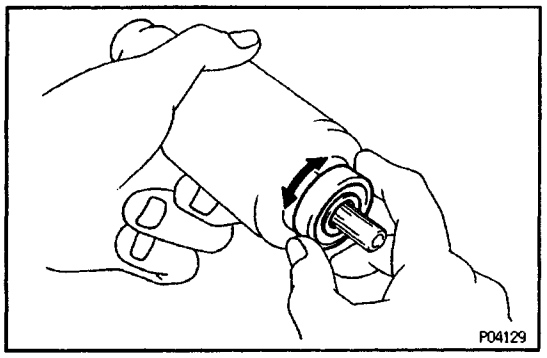

2. IF NECESSARY, REPLACE FRONT BEARING

(a) Using SST, remove the bearing.
SST 09286–46011

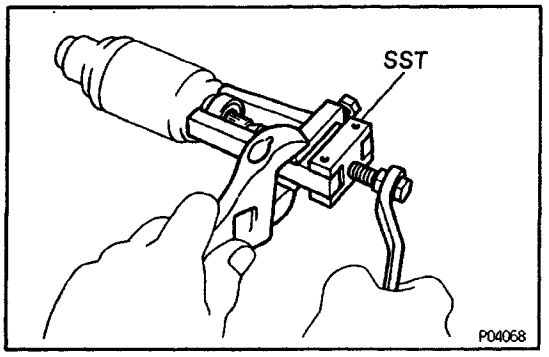

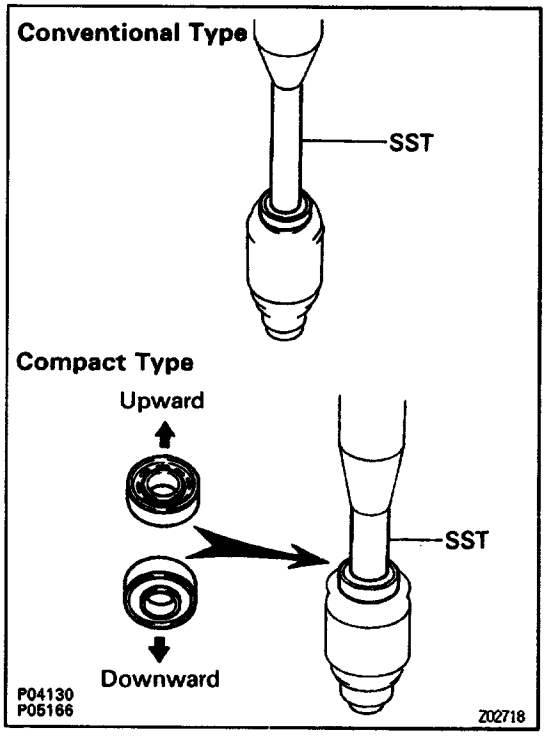

(b) Using SST and a press, press in a new bearing.
SST
09825 – 76010 for Conventional type
09820–00030 for Compact type
NOTICE (Compact type): Be careful of the bearing int–allation direction.

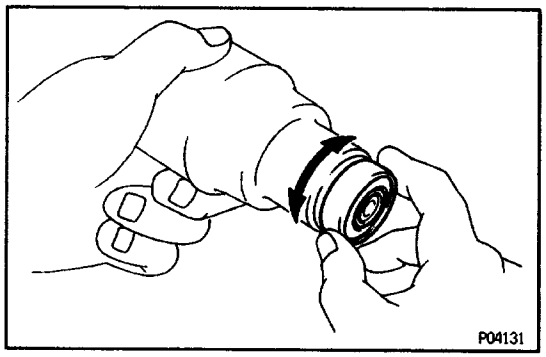

3. INSPECT REAR BEARING
Turn each bearing by hand while applying inward force.
If resistance is felt or the bearing sticks, replace the bearing.
,

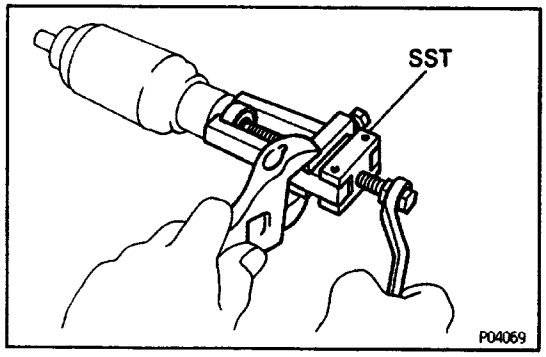

4. IF NECESSARY, REPLACE REAR BEARING
(a) Using SST, remove the bearing.
SST 09286–46011

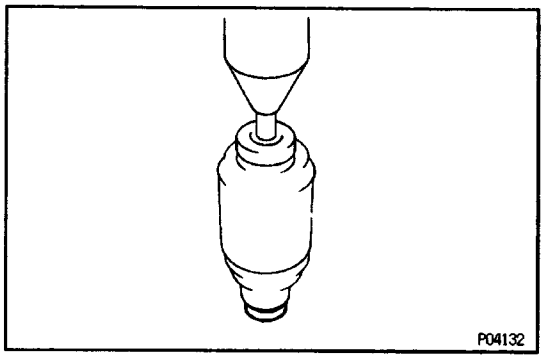

(b) Using a press, press in a new bearing.

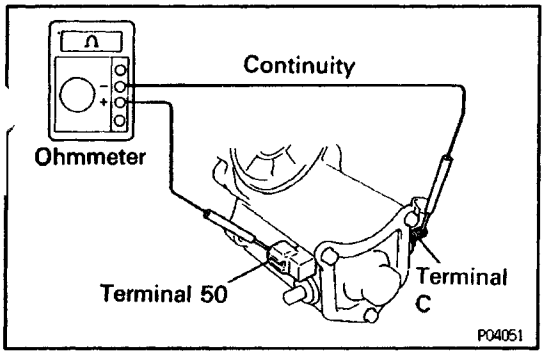

Magnetic Switch

1. PERFORM PULL–IN COIL OPEN CIRCUIT TEST

Using an ohmmeter, check that there is continuity between terminals 50 and C.

If there is no continuity, replace the magnetic switch,

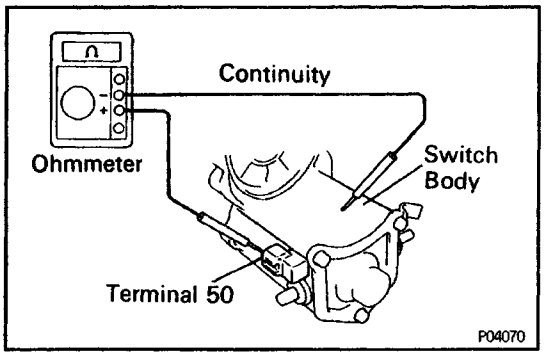

2. PERFORM HOLD–IN COIL OPEN CIRCUIT TEST

Using an ohmmeter, check that there is continuity between terminal 50 and the switch body.

If there is no continuity, replace the magnetic switch.:

ST02W–01

STARTER ASSEMBLY

(See Components for Disassembly and Assembly)

HINT: Use high–temperature grease to lubricate the bearings and gears when assembling the starter.

1. PLACE ARMATURE INTO FIELD FRAME

Apply grease to the armature bearings, and insert the armature into the field frame.

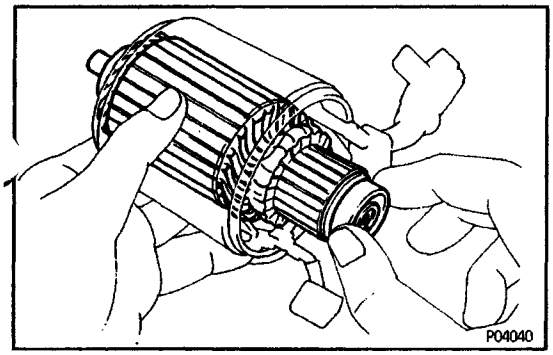

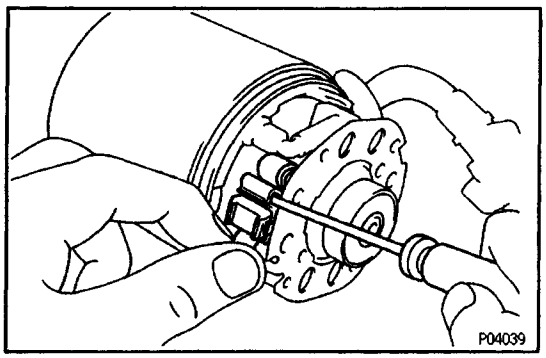

2. INSTALL BRUSH HOLDER

(a) Place the brush holder on the armature.

(b) Using a screwdriver, hold the brush spring back, and connect the brush into the brush holder. Connect the four brushes.

NOTICE: Check that the positive (+) lead wires are not-grounded.

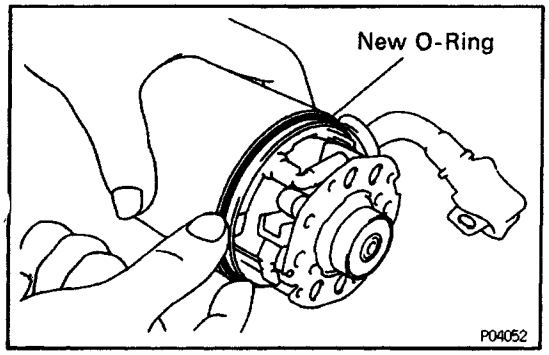

(c) Install a new O–ring to the groove of the field frame.

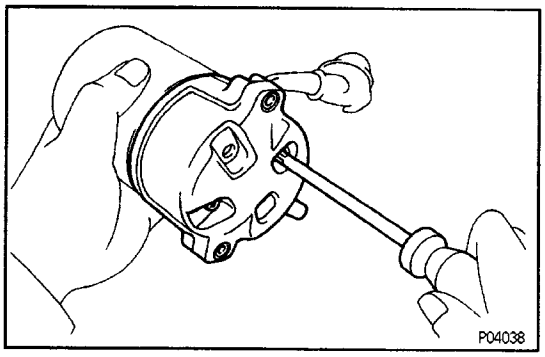

(d) Install a new 0–ring to the screw.
(e) Install the end cover to the field frame with the two screws.

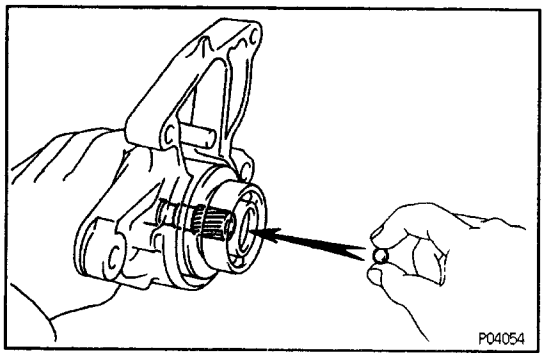

3. INSERT STEEL BALL INTO CLUTCH SHAFT HOLE

(a) Apply grease to the steel ball.
(b) Insert the steel ball into the clutch shaft hole.

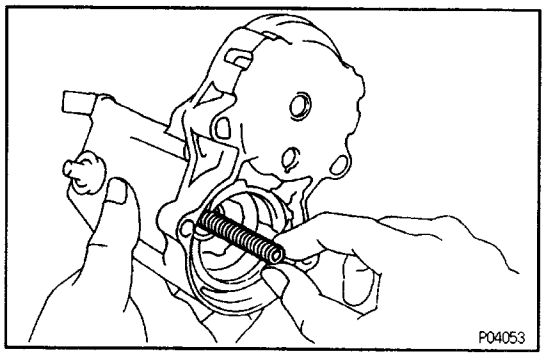

4. INSTALL STARTER HOUSING, CLUTCH ASSEMBLY AND GEAR

(a) Apply grease to the return spring.
(b) Insert the return spring into the magnetic switch hole

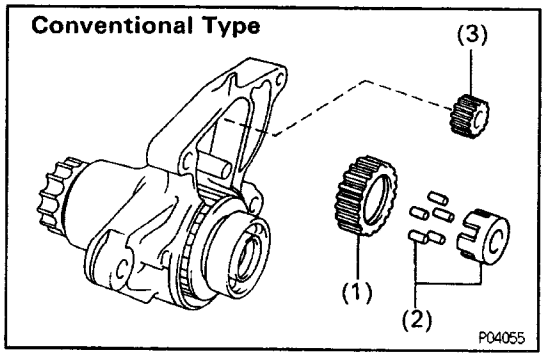

(c) Place the following parts in position on the starter housing:
(Conventional Type)
(1) Idler gear
(2) Bearing
(3) Pinion Gear

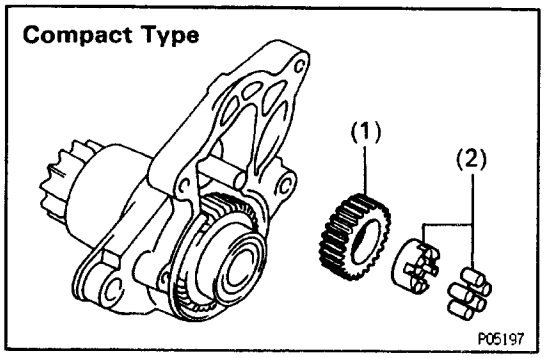

(Compact Type)
(1) Idler gear
(2) Bearing

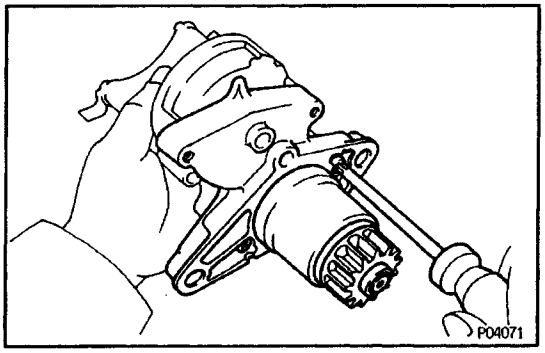

(d) Install the starter housing to the magnetic switch the two screws.

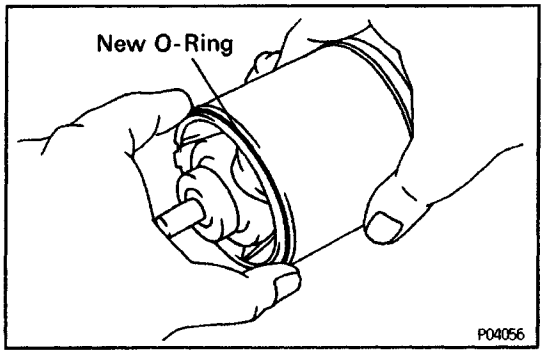

5. INSTALL FIELD FRAME AND ARMATURE ASSEMBLY

(a) Install a new O–ring to the groove of the frame

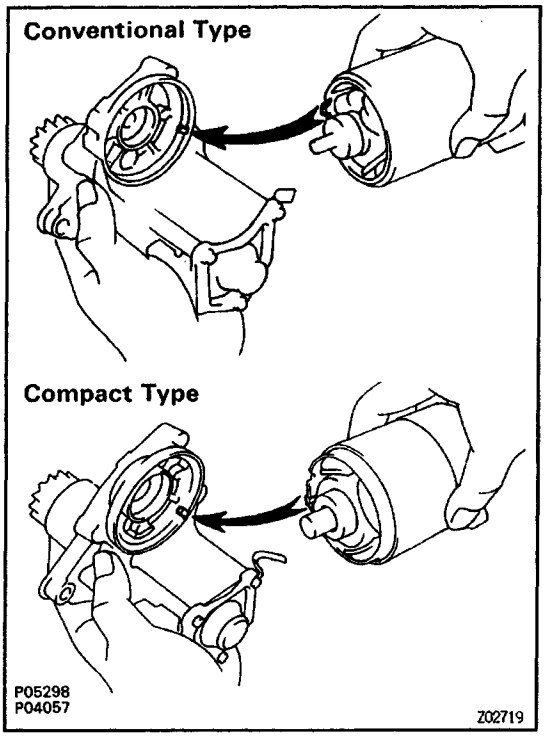

(b) Align the protrusion of the field frame with the cutout of the magnetic switch.

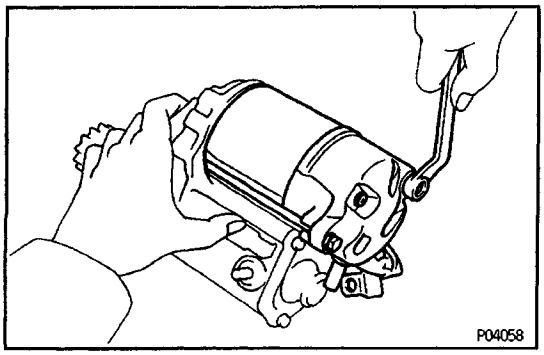

(c) Install the field frame and armature assembly, two through bolts.

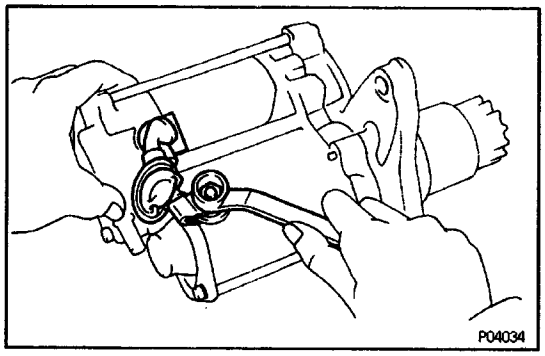

(d) Connect the lead wire to terminal C, and install the nut.

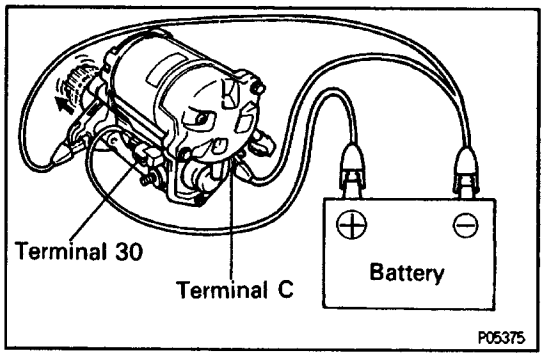

STARTER PERFORMANCE TEST

ST010–04

NOTICE: These tests must be performed within 3 to 5 seconds to avoid burning out the coil.

1. PERFORM PULL–IN TEST

(a) Disconnect the field coil lead wire from terminal C.

(b) Connect the battery to the magnetic switch as shown. Check that the clutch pinion gear moves outward. if the clutch pinion gear does not move, replace the magnetic switch assembly.

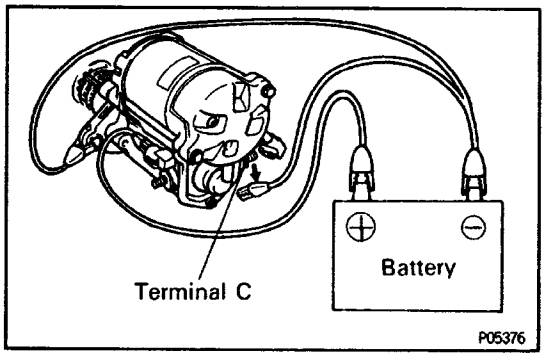

2. PERFORM HOLD–IN TEST

With battery connected as above with the clutch pinion gear out, disconnect the negative (–) lead from terminal
C. Check that the pinion gear remains out.

If the clutch pinion gear returns inward, replace the magnetic switch assembly.

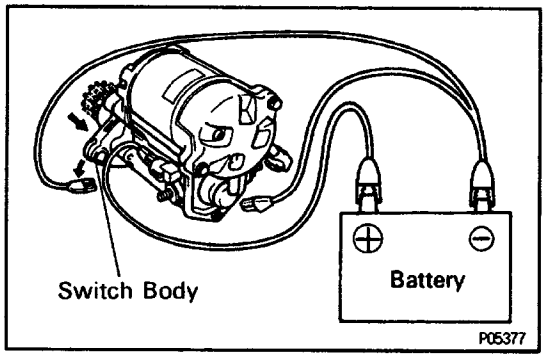

3. INSPECT CLUTCH PINION GEAR RETURN

Disconnect the negative (–) lead from the switch body.
Check that the clutch pinion gear returns inward.
If the clutch pinion gear does not return, replace the magnetic switch assembly.

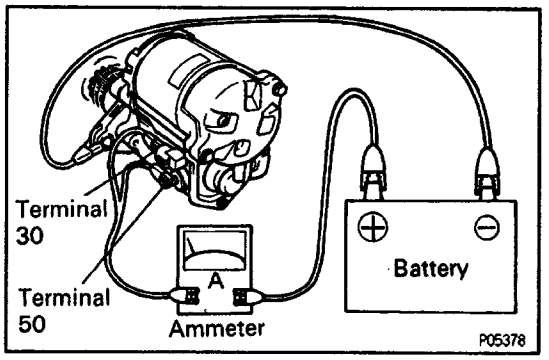

4. PERFORM NO–LOAD PERFORMANCE TEST

(a) Connect the battery and ammeter to the starter as shown.

(b) Check that the starter rotates smoothly and steadily with the pinion gear moving out. Check that the am–meter shows the specified current.

Specified current:

90 A or less at 11.5 V

ST02X–01

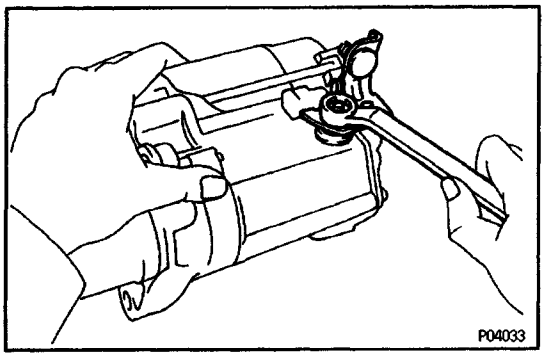

STARTER INSTALLATION (3S–GTE)

(See Components for Removal and Installation)

1. INSTALL STARTER

(a) Install the terminal bracket to the starter with the nut.

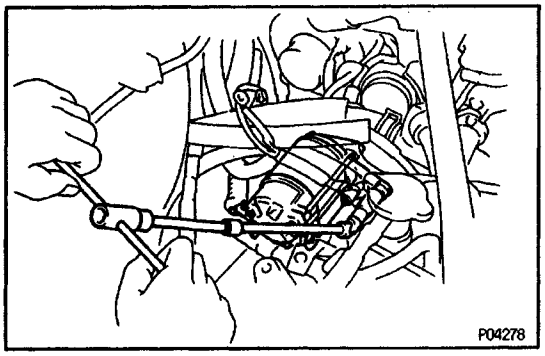

(b) Install the starter with the two bolts.

Torque: 39 N–m (400 kgf–cm, 29 ft–lbf)

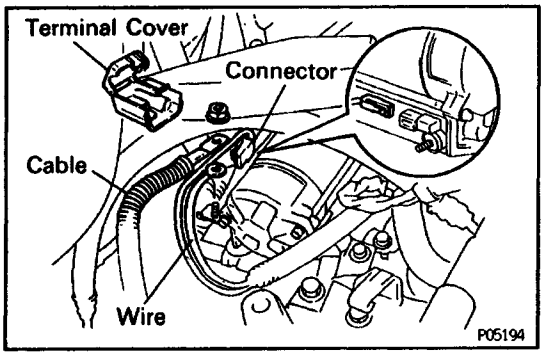

(c) Connect the starter wire and cable with the nut.

(d) Connect the starter connector.

(e) Install the terminal cover.

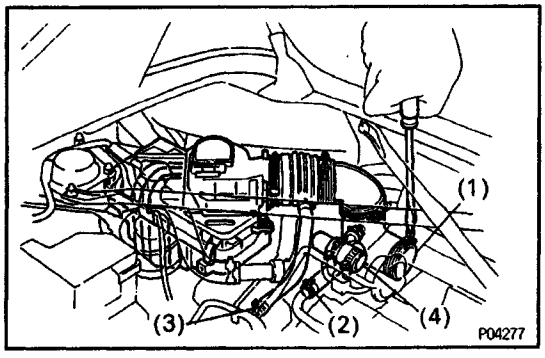

2. INSTALL AIR CLEANER HOUSING

(a) Install the air cleaner case with the three bolts.

(b) Install the air filter.

(c) Install the air cleaner cap and air flow sensor assembly with the four clips.

(d) Connect the following hoses:

(1) Air cleaner hose to turbocharger

(2) PCV hose to cylinder head cover

(3) Air hose to No.2 air tube

(4) Air hose to air by–pass valve

(e) Connect the air flow sensor connector.

3. INSTALL LH ENGINE HOOD SIDE PANEL

4. CONNECT CABLE TO NEGATIVE TERMINAL OF BATTERY

5. CHECK THAT ENGINE STARTS

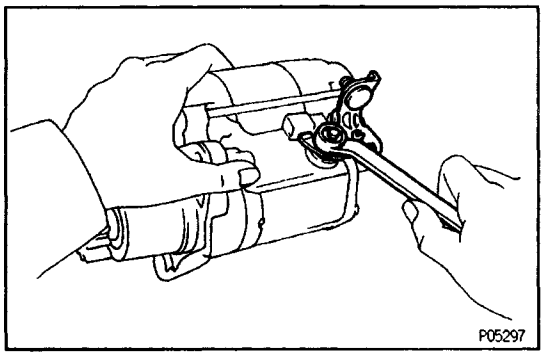

STARTER INSTALLATION (5S–FE)

ST02Y–01

(See Components for Removal and Installation)

1. INSTALL STARTER

(a) Install the terminal bracket to the starter with the nut.

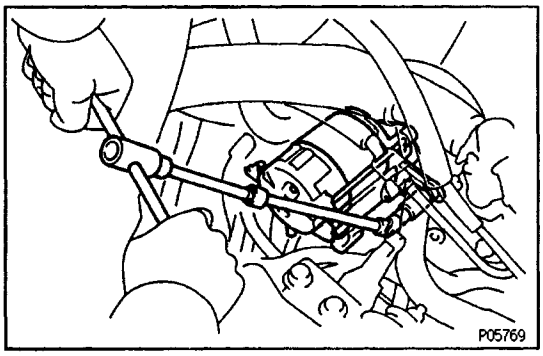

(b) Install the starter with the two bolts.

Torque: 39 N–m (400 kgf–cm, 29 ft–lbf)

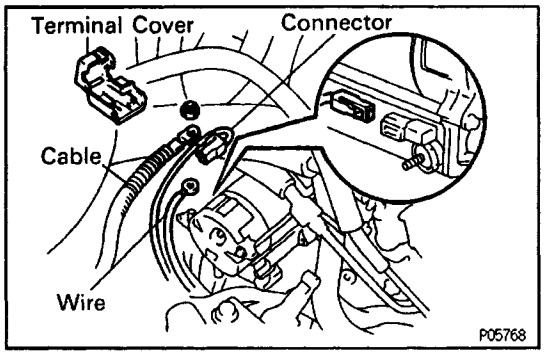

(c) Connect the starter wire and cable with the nut.
(d) Connect the starter connector.
(e) Install the terminal cover.

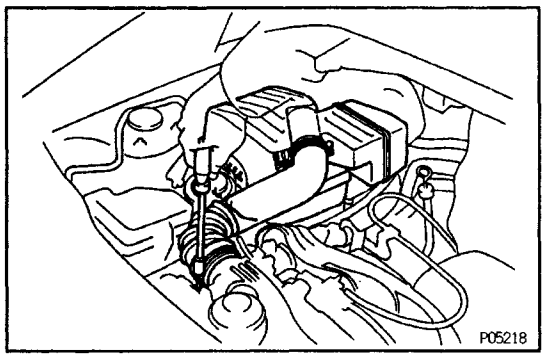

2. INSTALL AIR CLEANER HOUSING

(a) Install the air cleaner case with the three bolts.
(b) Install the air filter.
(c) Install the air cleaner cap with the four clamps.
(d) Connect the air cleaner hose to the throttle body.
(e) Connect the IATS connector.

3. INSTALL LH ENGINE HOOD SIDE PANEL

4. CONNECT CABLE TO NEGATIVE TERMINAL OF BATTERY

5. CHECK THAT ENGINE STARTS

STARTER RELAY

ST02Z–01

COMPONENTS FOR REMOVAL AND INSTALLATION

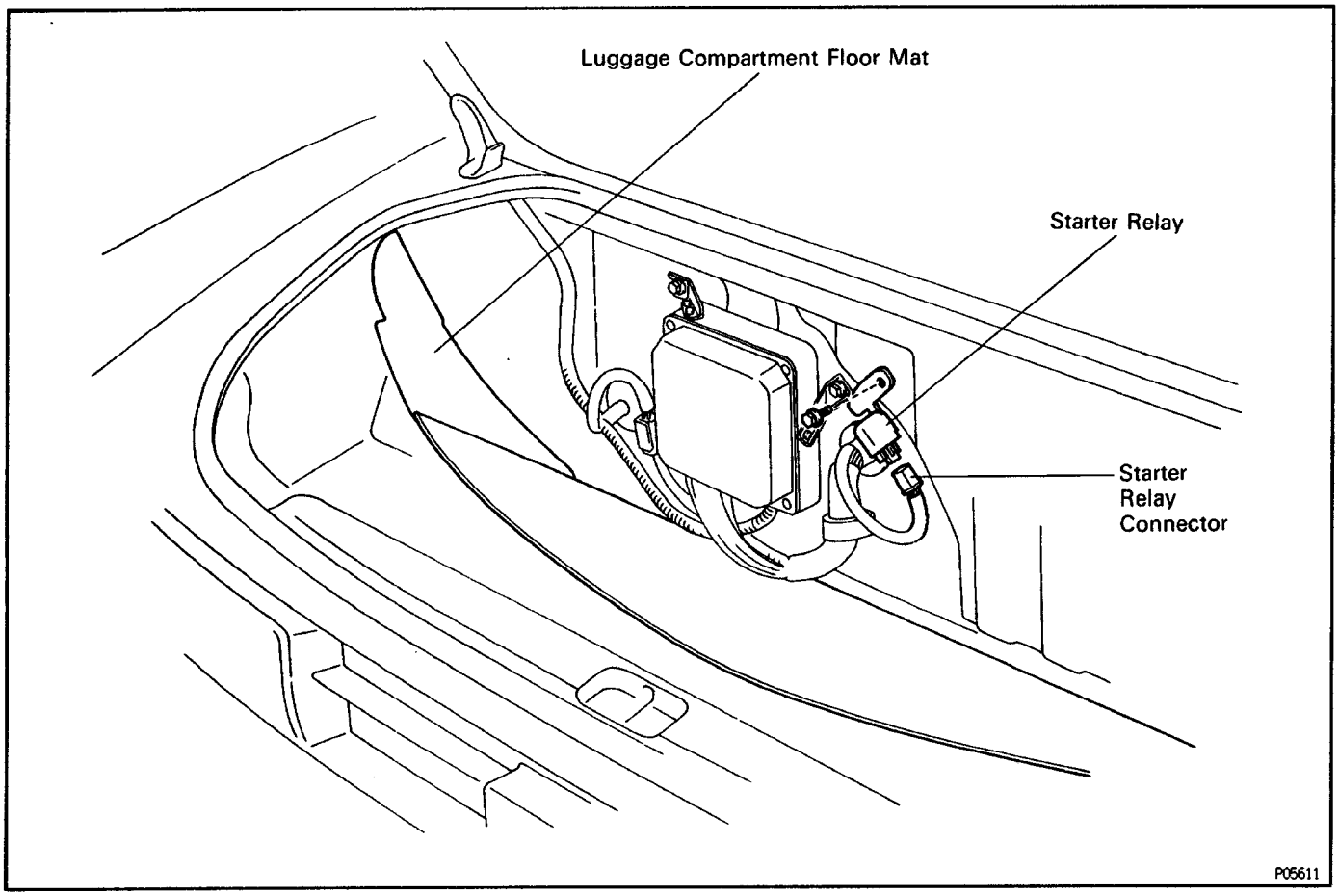

ST030–01

STARTER RELAY INSPECTION

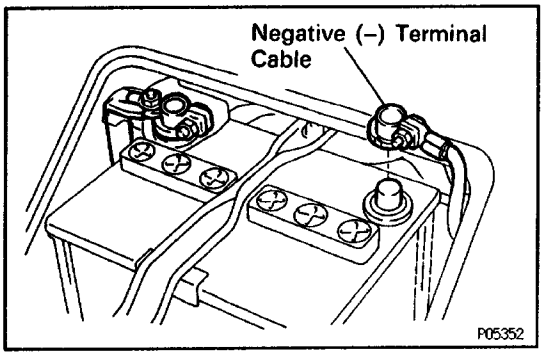

(See Components for Removal and Installation)

1. DISCONNECT CABLE FROM NEGATIVE TERMINAL OF BATTERY

CAUTION: Turn the ignition switch to "LOCK". Disconnect the negative terminal from the battery. Wait at least 20 seconds before proceeding with work.

2. DISCONNECT FRONT SIDE OF LUGGAGE COMPARTMENT FLOOR MAT FROM PARTITION PANEL

3. REMOVE STARTER RELAY

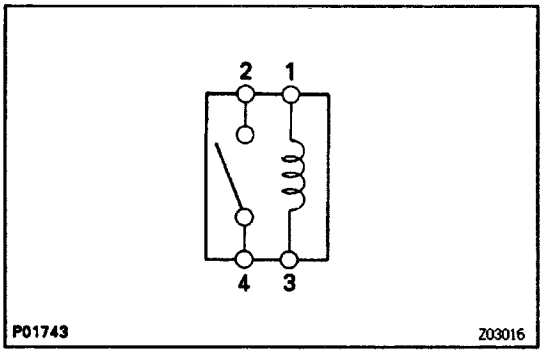

4. INSPECT STARTER RELAY

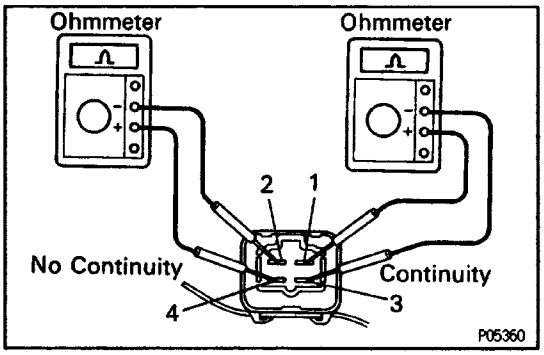

A. Inspect relay continuity

(a) Using an ohmmeter, check that there is continuity between terminals 1 and 3.

(b) Check that there is no continuity between terminals 2 and 4.

If continuity is not as specified, replace the relay.

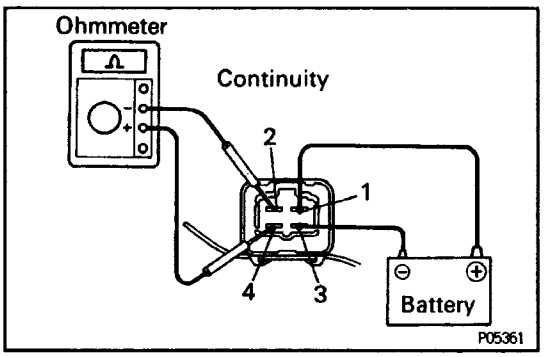

6. Inspect relay operation

(a) Apply battery voltage across terminals 1 and 3.

(b) Using an ohmmeter, check that there is continuity between terminals 2 and 4.

If operation is not as specified, replace the relay.

5. REINSTALL STARTER RELAY

6. REINSTALL LUGGAGE COMPARTMENT FLOOR MAT

7. RECONNECT CABLE TO NEGATIVE TERMINAL OF BATTERY

CLUTCH START SWITCH

(See MX section)

ST013-01

PARK/NEUTRAL SWITCH (PNS)

(See AX section)

ST014-01

SYSTEM CIRCUIT

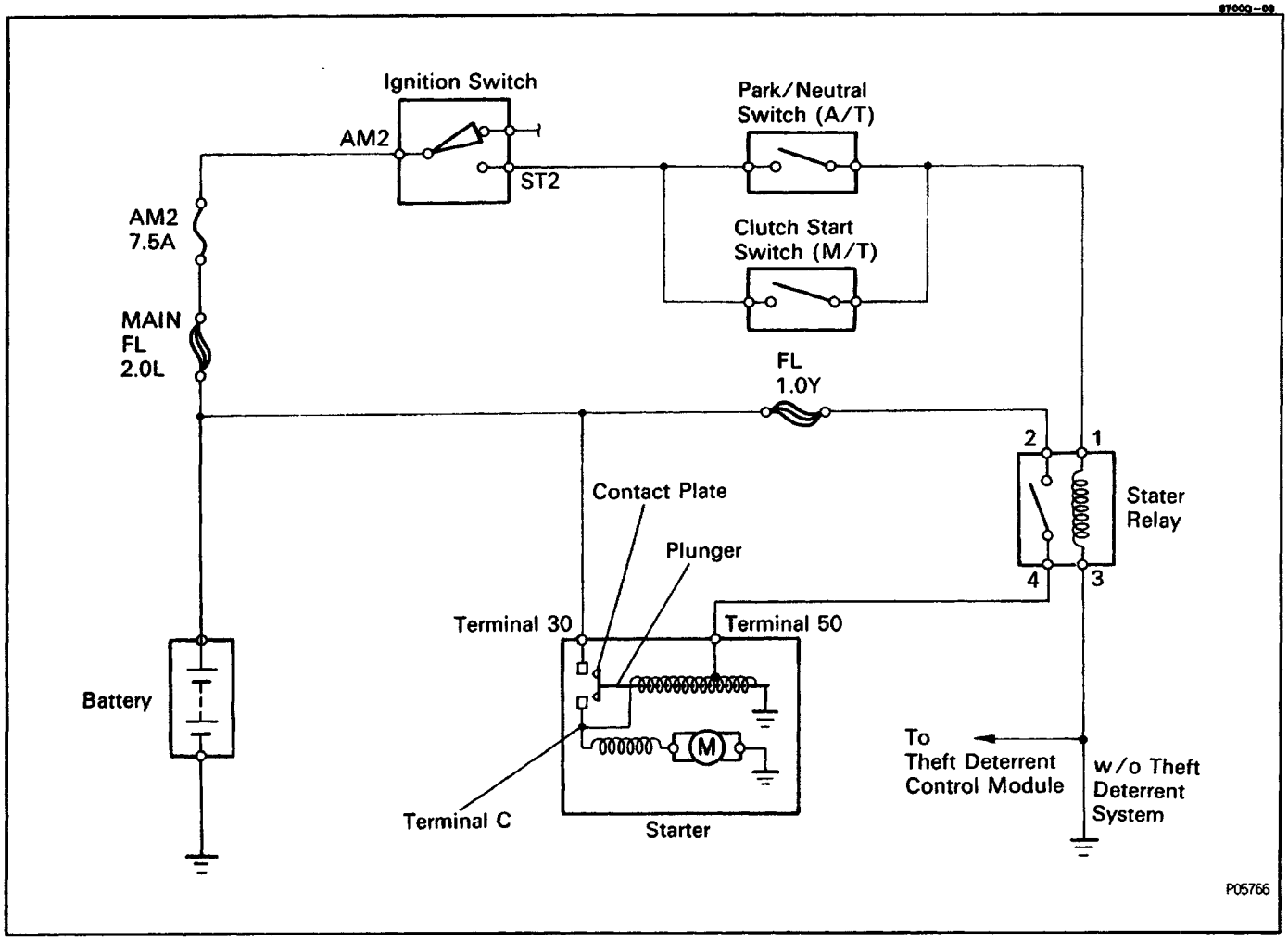

OPERATION

When the ignition switch is turned to START position, current flows from terminal 50 to the coil of the solenoid and the plunger is pulled by the magnetic force of the coil. When the plunger is pulled to the left as shown above, the contact plate of the plunge allows current from the battery to flow directly from terminal 30 to the motor, and the starter rotates.

When the engine is running and the ignition switch is returned to ON, the magnetic force of the coil disappears and the contact plate of the plunger is returned to its original position by the return spring. Battery voltage no longer flows from terminal 30, so the motor stops.

STEERING

GENERAL DESCRIPTION

11I011-01

- Care must be taken to replace parts properly because they could affect the performance of the steering system and result in a driving hazard.
- The steering wheel pad has an airbag built in, so take all due precautions when handling it. For more details, see the SRS AIRBAG section.

TROUBLESHOOTING

You will find the cause of trouble more easily by properly using the table shown below. In this table, the numbers indicate the priority of the probable cause of trouble. Check each part in the order shown. If necessary, repair or replace the part.

See page / Parts Name / Trouble	Tires (Improperly inflated) SA–3	Front wheel alignment (Incorrect) SA–4	Fluid level (Low) SA–40	Drive belt (Loose)	Steering system joints (Worn) –	Suspension arm ball joints (Worn) SA–27	Steering column (Binding) –	Sliding yoke (Worn) –	Steering gear housing	Front wheel bearing (Worn) SA–10
Hand steering	1	4	2	3	5	6	7		8	
Poor return	1	2					3		4	
Excessive play					1	2		3	5	4
Abnormal noise			1		2				3	

V00014

ASSEMBLY REMOVAL AND INSTALLATION

SR076–01

Remove and install the parts as shown.

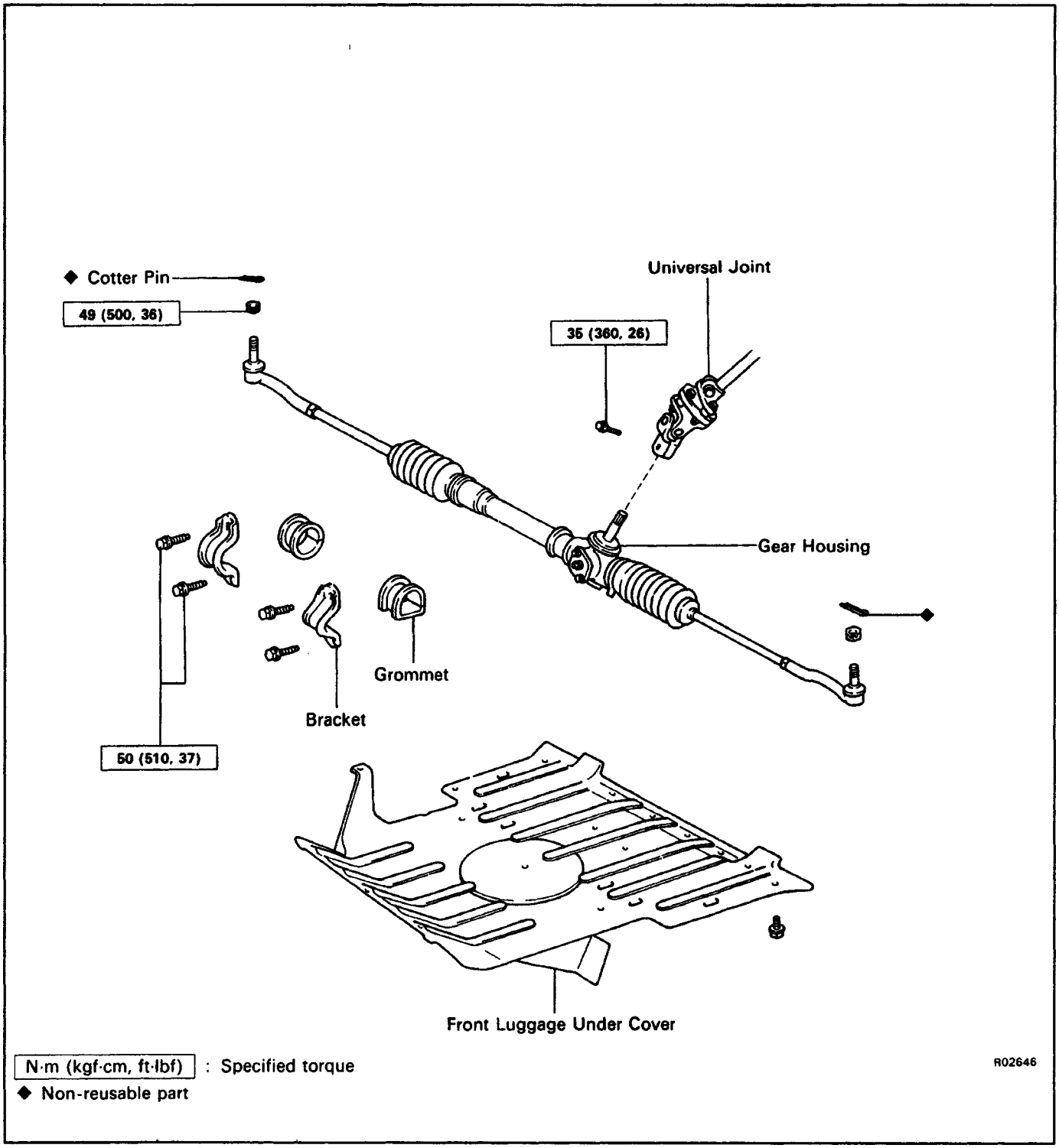

(MAIN POINTS OF REMOVAL AND INSTALLATION)

NOTICE: When disconnecting the universal joint during removal of the gear housing, remove the steering wheel and perform centering of the spiral cable.
(See page AB–2)
If the operation is performed without removing the steering wheel, use the procedure below to make sure the steering wheel is firmly in position and cannot turn.

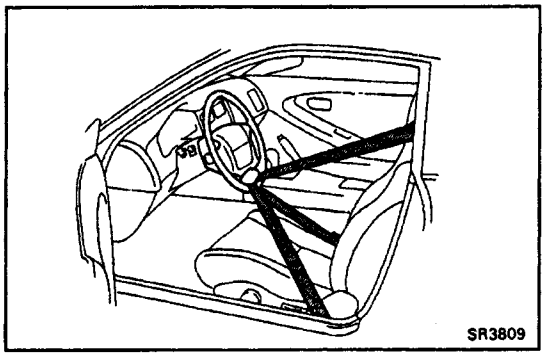

1. DISCONNECT UNIVERSAL JOINT

(a) Position the front wheels facing straight ahead.
(b) Using the seat belt of the driver's seat, fix the steering wheel so that is does not turn.

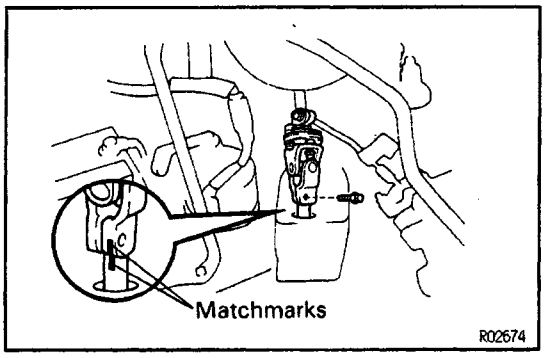

(c) Place matchmarks on the universal joint and pinion shaft.
(d) Loosen the bolt on the upper side of the universal joint, remove the bolt on the lower side and disconnect the universal joint.

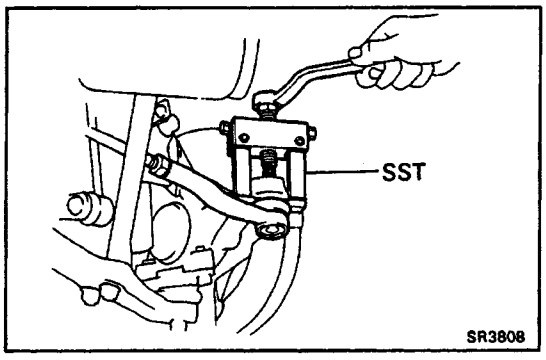

2. DISCONNECT TIE ROD ENDS

(a) Remove the cotter pin and nut.
(b) Using SST, disconnect the tie rod end from the knuckle arm.
SST 09628–62011

3. CONNECT UNIVERSAL JOINT

(a) Set the gear housing so that it matches the dimensions shown belowwith the gear housing at the center point.

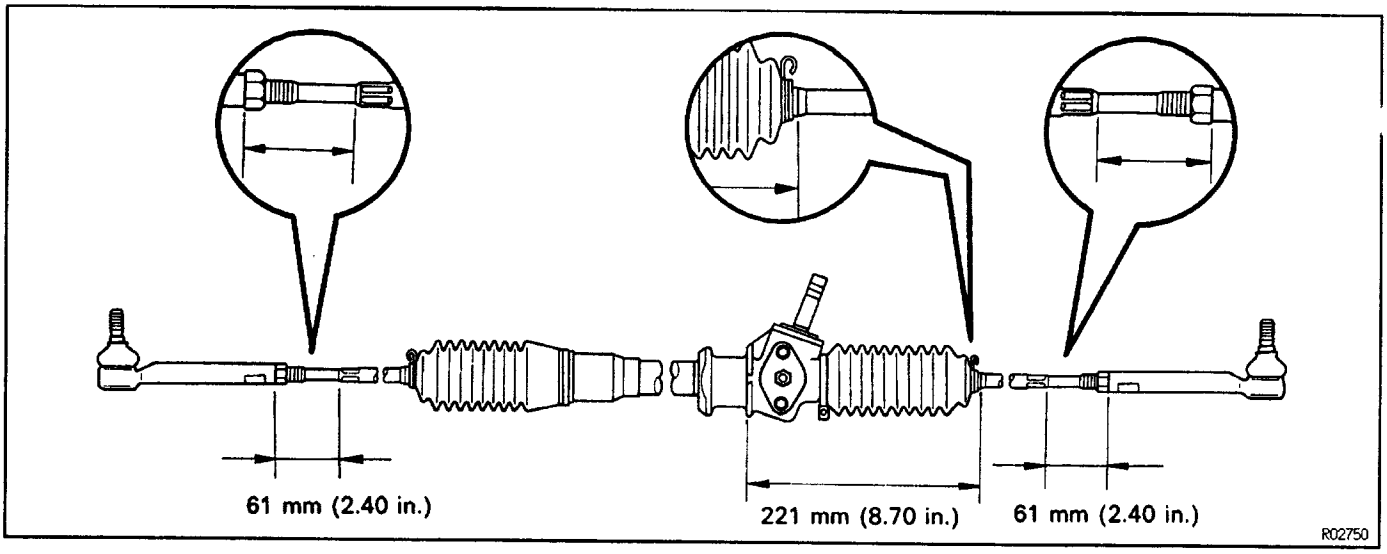

HINT: The dimension of the tie rod end is a reference value, so always adjust the toe–in before tightening the lock nut.

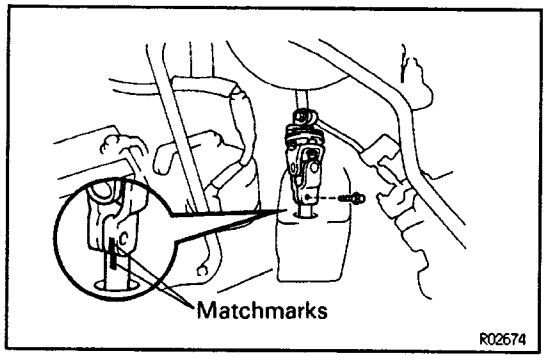

(b) Align matchmarks on the universal joint and pinion shaft and connect them.

4. CENTER SPIRAL CABLE

If the steering wheel has been removed, or the steering wheel may have moved during the operation, always perform centering of the spiral cable.

(See page AB–17)

5. CHECK STEERING WHEEL CENTER POINT

6. CHECK TOE–IN

(See page SA–4)

SR077–01

COMPONENTS

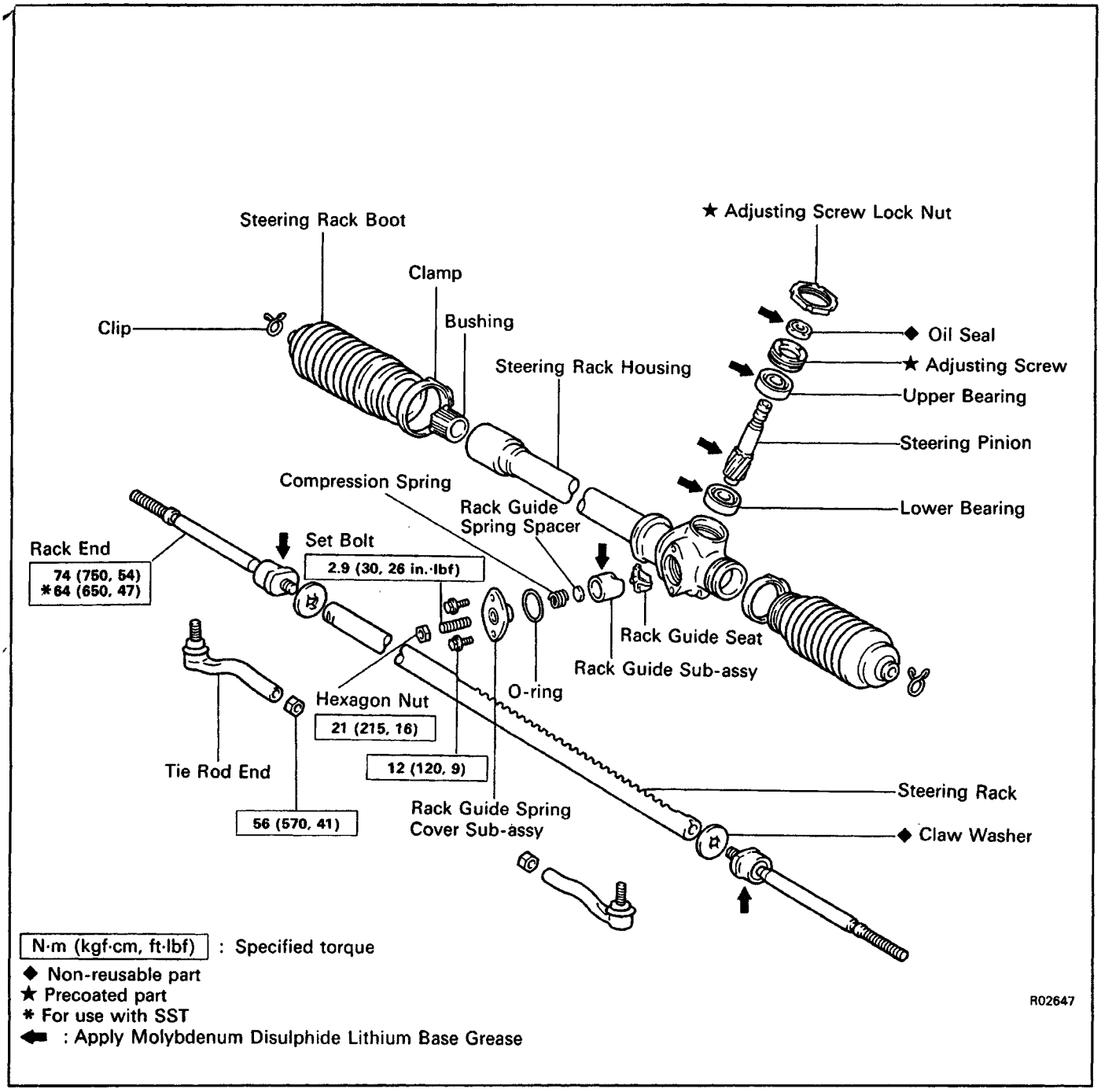

SR076–01

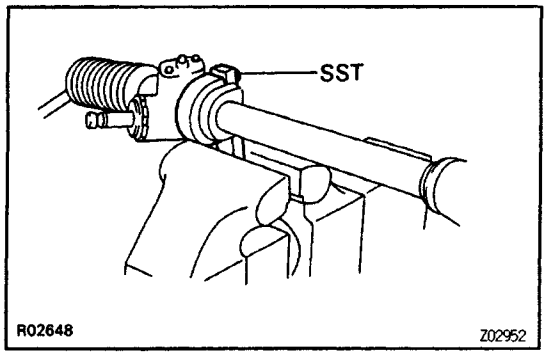

GEAR HOUSING DISASSEMBLY

1. CLAMP GEAR HOUSING IN VISE

Using SST, clamp the gear housing in a vise.
SST 09612–00012

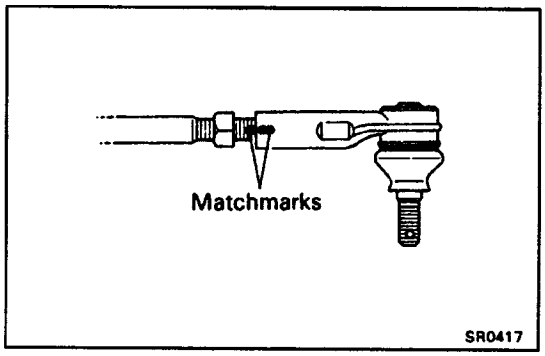

2. REMOVE TIE ROD ENDS

(a) Loosen the lock nuts and place matchmarks on the tie rod ends and rack ends.

(b) Remove the tie rod ends and lock nuts.

3. REMOVE RACK BOOTS

(a) Remove the clips and clamps.

(b) Remove the rack boots.

(c) Mark the left and right boots accordingly.

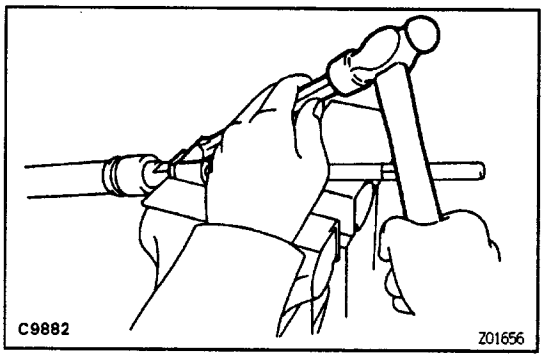

4. REMOVE RACK ENDS

(a) Unstake the claw washers.

NOTICE: Avoid any impact to the rack.

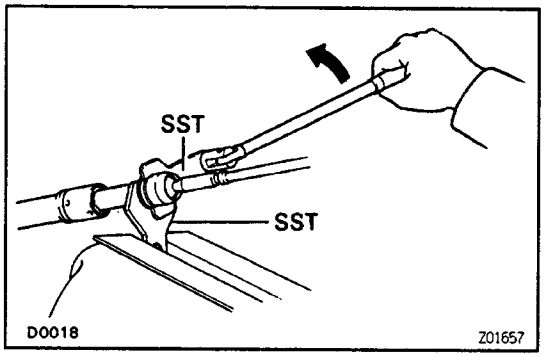

(b) Using SST, remove the rack ends.
SST 09612–10093 (09628–10020),
09612–24014 (09617–24011)

(c) Mark the left and right rack ends accordingly.

(d) Remove the claw washers.

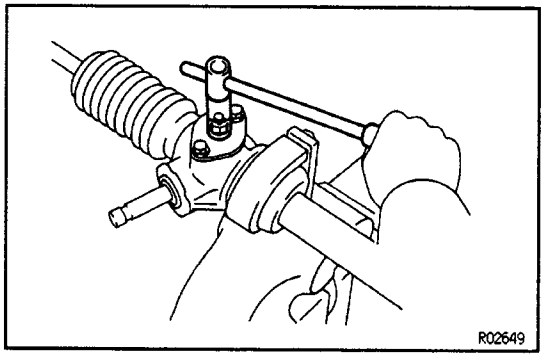

5. REMOVE HEXAGON NUT

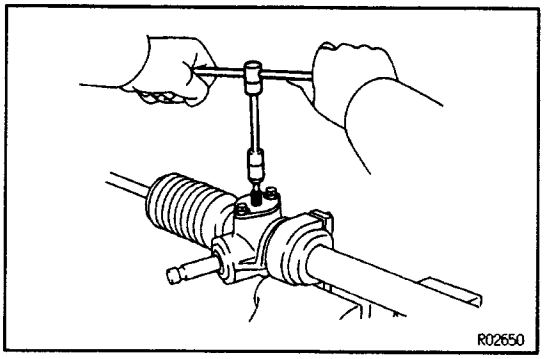

6. REMOVE SET BOLT

Using a hexagon wrench 4 mm, remove the set bolt.

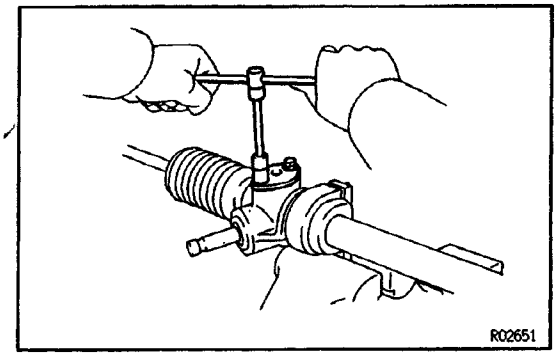

7. REMOVE RACK GUIDE SPRING COVER SUB –ASSY
Remove two bolts and the rack guide spring cover sub – assy.

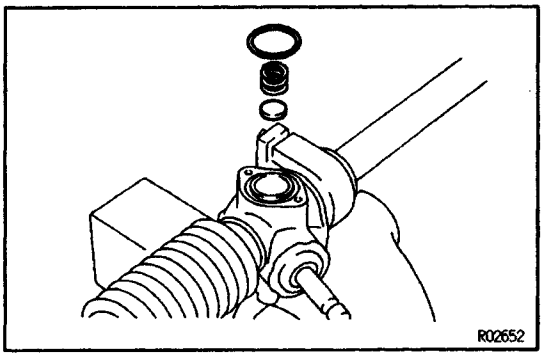

8. REMOVE O – RING
9. REMOVE COMPRESSION SPRING
10. REMOVE RACK GUIDE SPRING SPACER

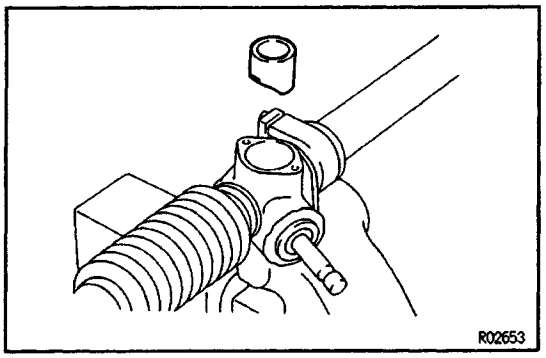

11. REMOVE RACK GUIDE SUB–ASSY

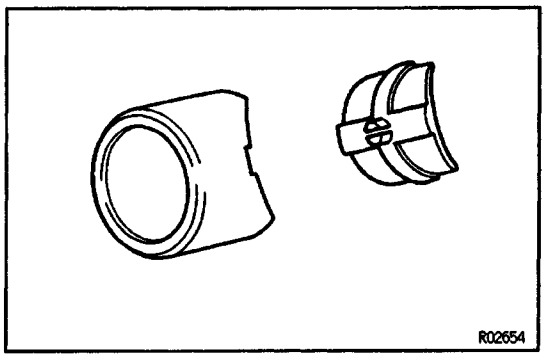

12. REMOVE RACK GUIDE SEAT
Remove rack guide seat from the rack guide sub–assy.

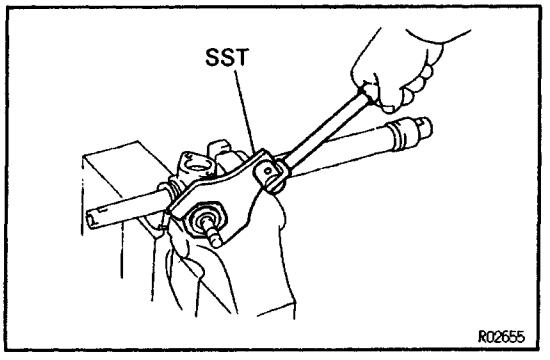

13. REMOVE PINION BEARING ADJUSTING SCREW LOCK NUT
Using SST, remove the pinion bearing adjusting screw lock nut.
SST 09612 –10093 (09617 –10010)

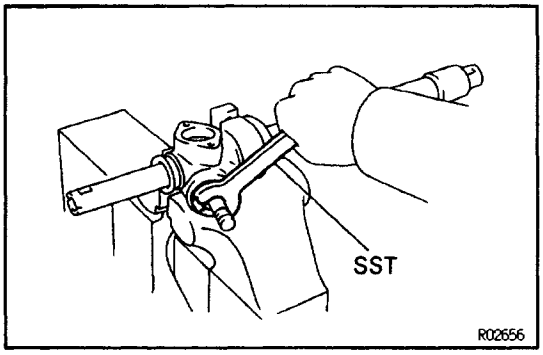

14. REMOVE PINION BEARING ADJUSTING SCREW

Using SST, remove the pinion bearing adjusting screw.

SST 09612–24014 (09616–10020)

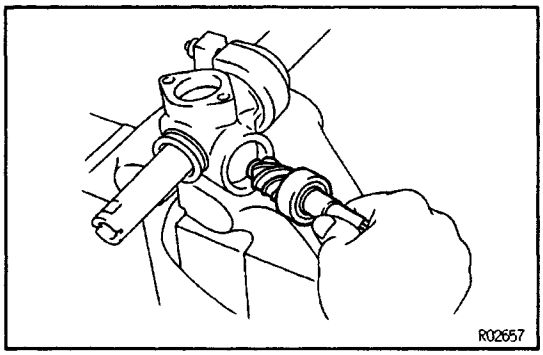

15. REMOVE PINION WITH UPPER BEARING

HINT: Be careful not to damage the serrations.

(a) Fully pull the rack from the housing side and align the rack notched portion with the pinion.

(b) Remove the pinion together with the upper bearing.

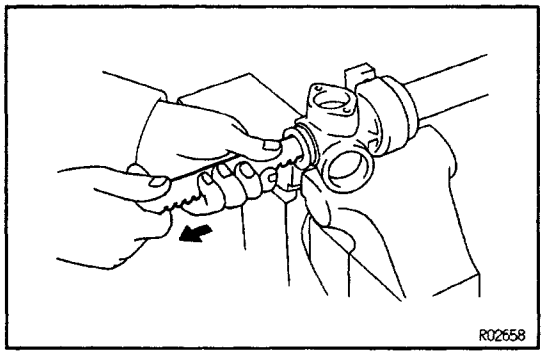

16. REMOVE RACK

Remove the rack from the pinion side without re–volving it.

HINT: If the rack is pulled from the tube side, there is a possibility of damaging the busing with the rack teeth surface.

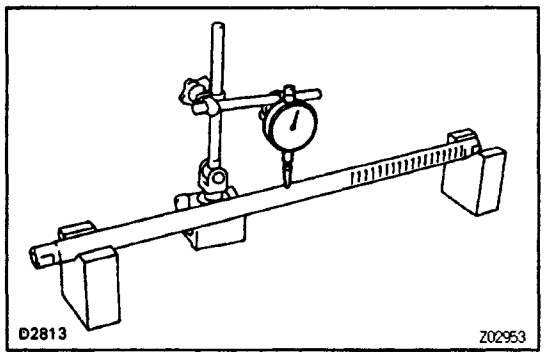

SR079–01

GEAR HOUSING COMPONENTS INSPECTION AND REPAIR

1. INSPECT RACK

(a) Check the' rack for runout and for teeth wear or damage.

Maximum runout:

0.3 mm (0.012 in.)

(b) Check the back surface for wear or damage. If faulty, replace it.

NOTICE: Do not use a wire brush when cleaning.

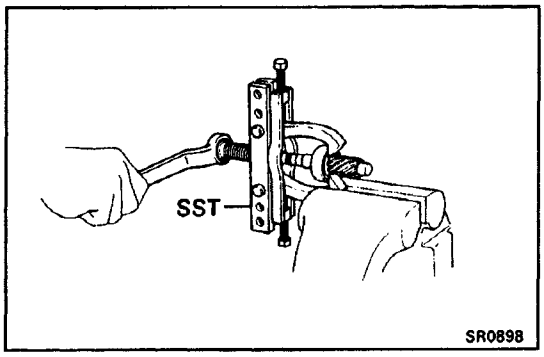

2. IF NECESSARY, REPLACE PINION UPPER BEARING

(a) Using SST, remove the upper bearing.
SST 09950–20017

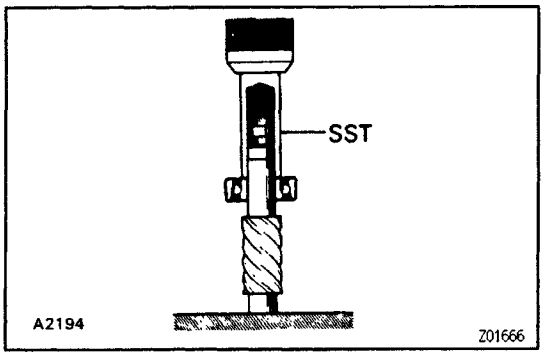

(b) Using SST, install a new upper bearing.
SST 09612–24014 (09612–10061)

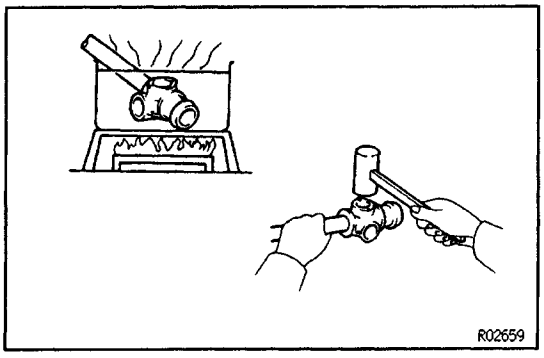

3. IF NECESSARY, REPLACE PINION LOWER BEARING .

(a) Heat the rack housing to above 80˚C (176˚F).
(b) Tap the rack housing with a plastic hammer or such to remove the lower bearing by recoil.

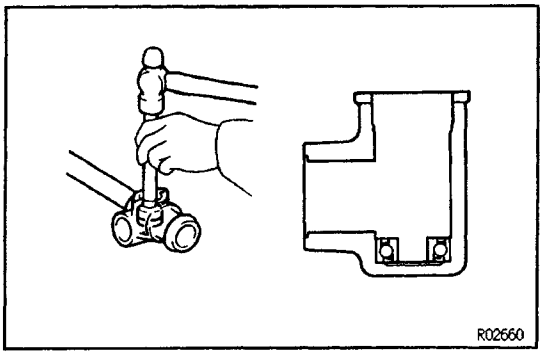

(c) Heat the rack housing to above 80˚C (176˚F).
(d) Using SST, install a new lower bearing.
SST 09620–30010 (09631–00020),
09630–24013 (09620–24030)

HINT: Observe the correct bearing direction.

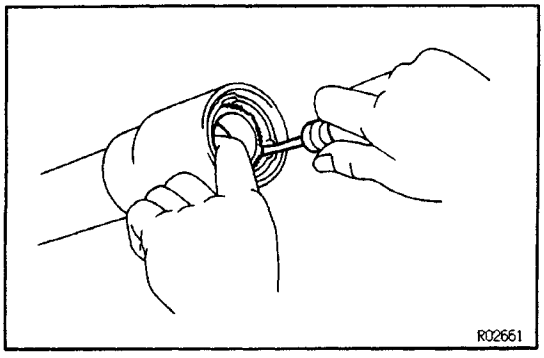

4. IF NECESSARY, REPLACE RACK BUSHING

(a) Using a screwdriver, loosen the three bushing claws and remove the rack busing from the rack housing.

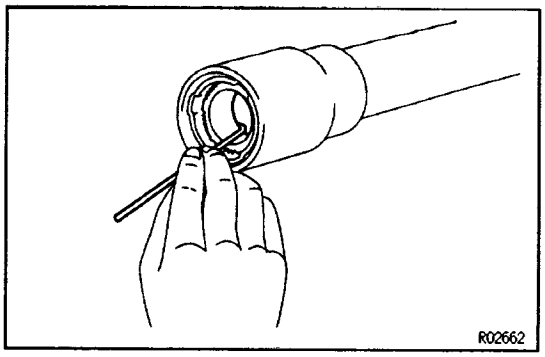

(b) Insure that the tube holes are not clogged with grease.
HINT: If the tube holes are clogged, the pressure inside the boot will

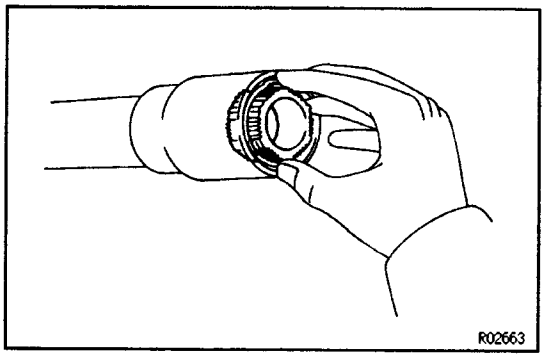

(c) Install a new bushing into the rack housing, making sure to align into the three holes.

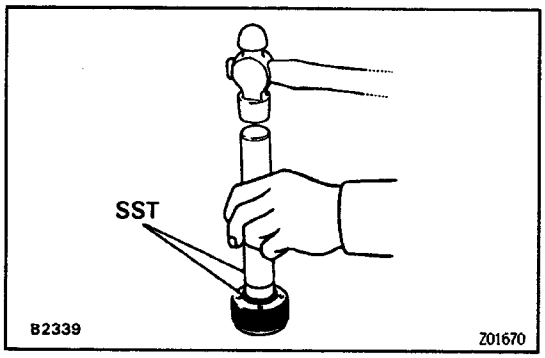

5. IF NECESSARY, REPLACE PINION OIL SEAL

(a) Using SST, remove the pinion oil seal.
SST 09620–30010 (09631 –00020),
09630 – 24013 (09620 – 24010)

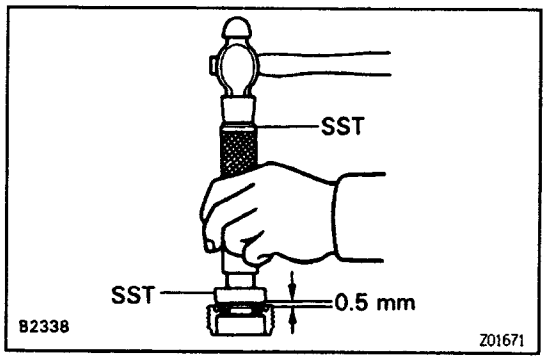

(b) Using SST, drive in a new oil seal until it is protruding 0.5 mm (0.020 in.)
SST 09620–30010 (09631 –00020),
09630–24013 (09620–24020)

SR07A–01

GEAR HOUSING ASSEMBLY

1. PACK MOLYBDENUM DISULPHIDE LITHIUM BASE GREASE

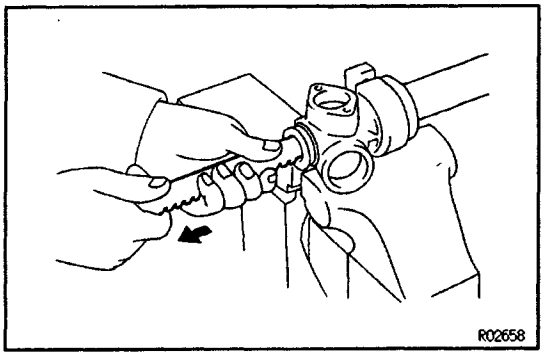

2. INSTALL RACK INTO RACK HOUSING

(a) From the pinion side, install the rack into the rack housing.

(b) Set the rack notched side so that the pinion can be positioned inside.

(c) Line up the cutout portion of the rack with the pinion.

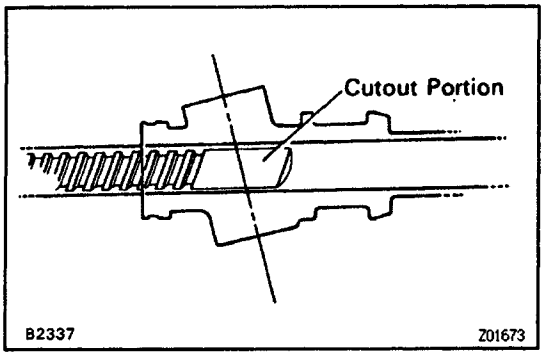

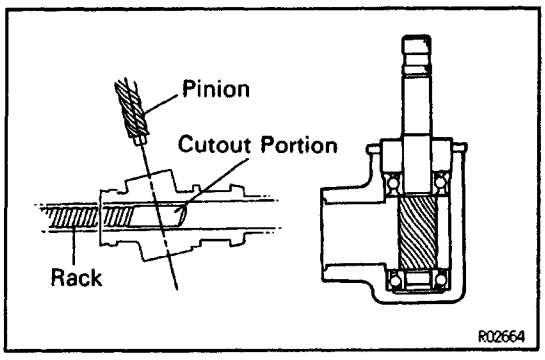

3. INSTALL PINION INTO HOUSING

Insure that the pinion end is securely in the lower bearing.

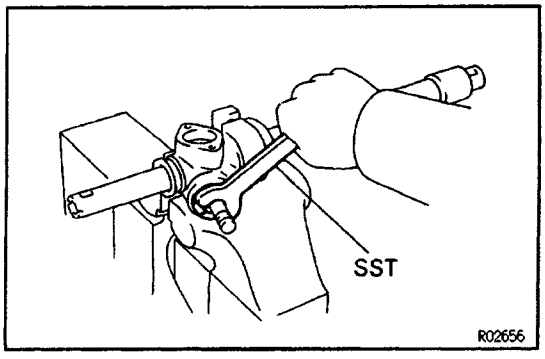

4. INSTALL PINION BEARING ADJUSTING SCREW

(a) Coat sealant onto the screw threads.

Sealant:

Part No. 08833–00080, THREE BOND 1344, LOCTITE 242 or equivalent

(b) Using SST, install the pinion bearing adjusting screw.
SST 09612–24014 (09616–10020)

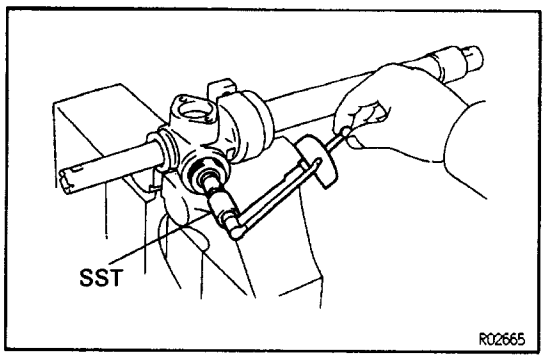

5. ADJUST PINION PRELOAD

(a) Line up the cutout portion of the rack with the pinion.

(b) Using SST, tighten the pinion bearing adjusting screw to the point where the turning torque is 0.4 N–m (3.7 kgf–cm, 3.2 in.–lbf).

SST 09612 – 24014 (09616 –10010)

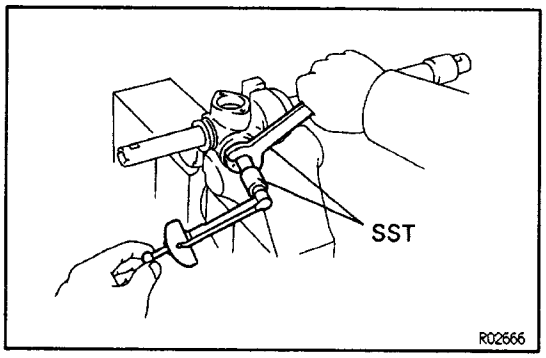

(c) Using SST, loosen the pinion bearing adjusting screw to the point where the turning torque is 0.2–0.3 N .m (2.3–3.3 kgf–cm, 2.0–2.9 in.–lbf)

SST 09612–24014 (09616–10010,09616–10020)

Preload (turning):

0.2–0.3 N–m

(2.3–3.3 kgf–cm, 2.0–2.8 in.–lbf)

6. INSTALL PINION BEARING ADJUSTING SCREW LOCK NUT

(a) Apply sealant to 2 or 3 threads of the lock nut.

Sealant:

Part No. 08833–00080, THREE BOND 1344, LOCTITE 242 or equivalent

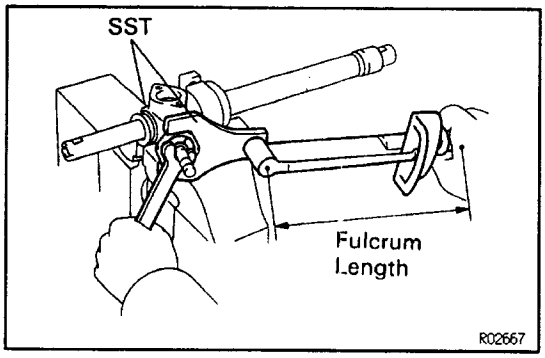

(b) Using SST, install the lock nut.

SST 09612 –10093 (09617 –10010), 09612–24012 (09616–10020)

Torque: 91 N–m (830 kgf–cm, 67 ft–lbf)

HINT: Use a torque wrench with a fulcrum length of 425 mm (16.73 in.).

(c) Recheck the pinion preload.

If incorrect, readjust.

Preload (turning):

0.1 –0.2 N–m

(1.5–2.5 kgf–cm, 1.3–2.2 ft–lbf)

7. INSTALL RACK GUIDE SEAT

Install rack guide seat to the rack guide sub–assy.

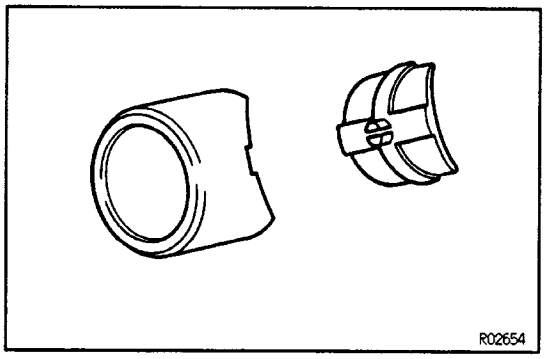

8. INSTALL RACK GUIDE SUB–ASSY

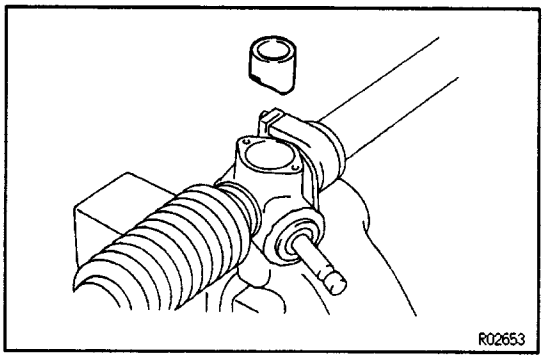

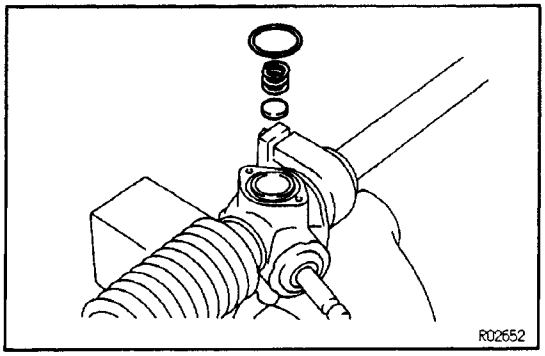

9. INSTALL RACK GUIDE SPRING SPACER
10. INSTALL COMPRESSION SPRING
11. INSTALL O–RING

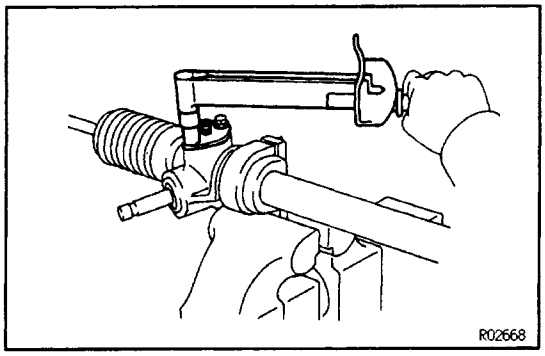

12. INSTALL RACK GUIDE SPRING COVER SUB–ASSY
Install rack guide spring cover sub–assy with two bolts.

Torque: 12 N–m (120 kgf–cm, 9 ft–lbf)

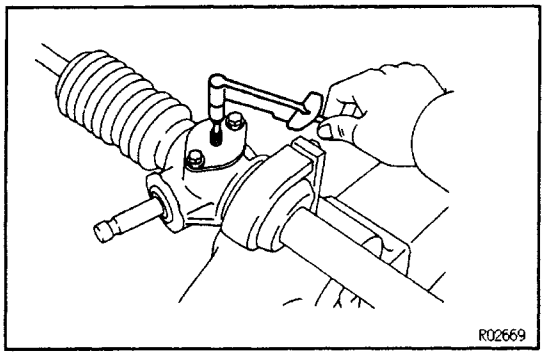

13. ADJUST TOTAL PRELOAD

(a) Using a hexagon wrench (4mm), tighten the set bolt.
Torque: 2.9 N–m (30 kgf–cm, 26 in.–lbf)

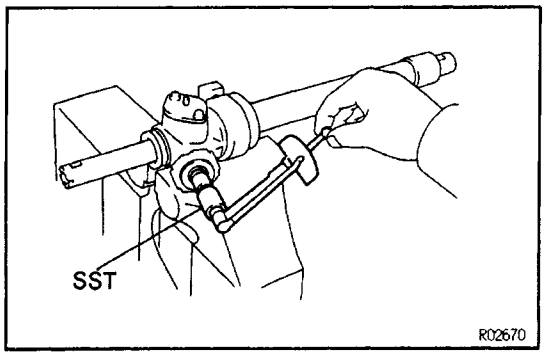

(b) Measure the total preload with SST.
SST 09612 – 24014 (09616 –10010)

Preload (turning):
0.6–1.1 N–m
(6–11 kgf–cm, 5.2–9.5 in.–lbf)

- If preload is insufficient:
  Retorque the rack guide spring cap, and return it 12° or slightly less.
- If there is excess preload:
  Slightly return the rack guide spring cap.

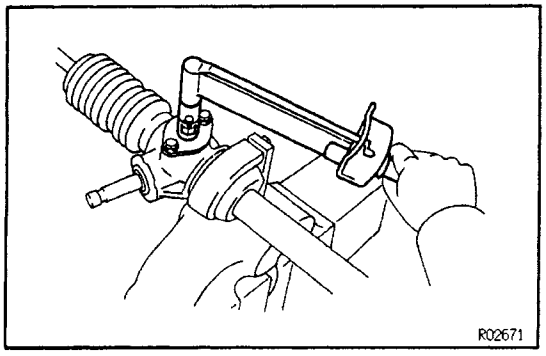

14. INSTALL HEXAGON NUT

(a) Install hexagon nut.
Torque: 21 N–m (215 kgf–cm, 16 ft–lbf)

(b) Recheck the total preload.
If incorrect, read just.

Preload (turning):
0.6–1.1 N–m
(6–11 kgf–cm, 5.2–9.5 in.–lbf)

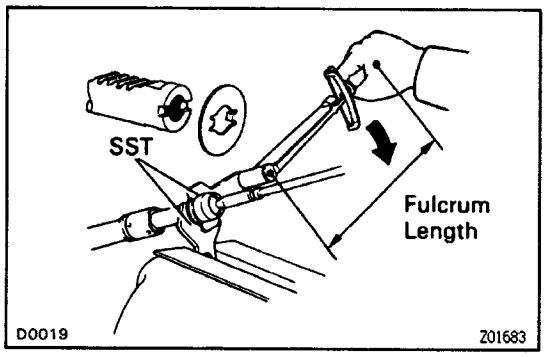

15. INSTALL RACK ENDS

(a) Install new claw washers.

HINT: Align the claw of the claw washer with the rack groove.

(b) Using SST, install the rack ends.

SST 09612–10093 (09628–10020), 09612–24014 (09617–24011)

Torque: 64 N–m (650 kgf–cm, 47 ft–lbf)

HINT: Use a torque wrench with a fulcrum length of 340 mm (13.39 in.).

(c) Using a brass bar and hammer, stake the claw washers.

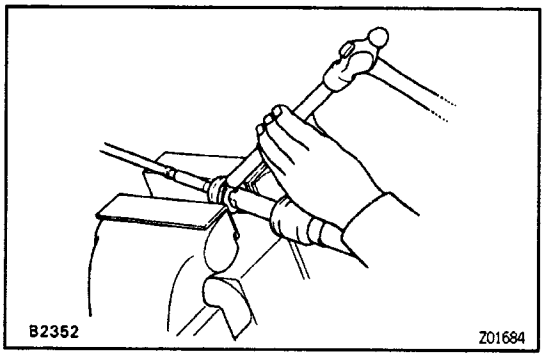

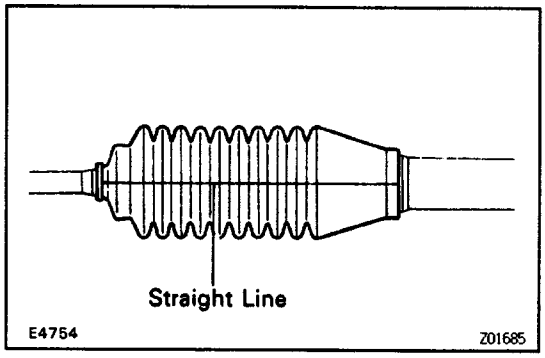

16. INSTALL RACK BOOTS

(a) Install the rack boots.

HINT: Be careful not to damage or twist the boot. The left and right boots are different. Be careful not to interchange them.

(b) Install the clamps and clips.

HINT: Face the open ends of the clip outward as shown, to avoid damage to the boot.

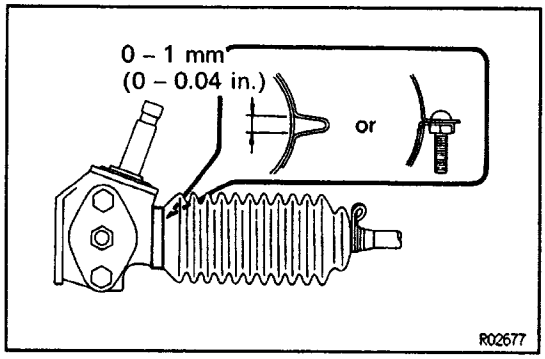

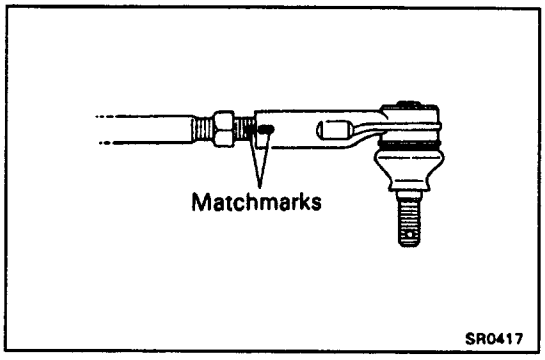

17. INSTALL TIE ROD ENDS

(a) Screw the lock nuts and tie rod ends onto the rack ends until the matchmarks are aligned.

(b) After adjusting toe–in, torque the lock nuts.

Torque: 56 N–m (570 kgf–cm, 41 ft–lbf)

MANUAL STEERING GEAR HOUSING

PREPARATION

SST (SPECIAL SERVICE TOOLS)

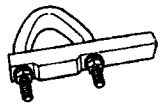	09612–00012 Rack & Pinion Steering Rack Housing Stand	
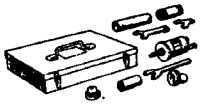	09612–10093 Steering Gear Housing Overhaul Tool Set	
	(09617–10010) Steering Pinion Bearing Adjusting Screw Lock Nut Wrench	
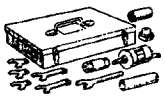	09612–24014 Steering Gear Housing Overhaul Tool Set	
	(09612–10061) Steering Pinion Bearing Replacer	
	(09616–10010) Steering Pinion Bearing Adjusting Socket	
	(09616–10020) Steering Pinion Bearing Adjusting Screw Wrench	
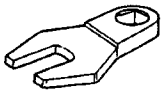	(09617–24011) Steering Rack wrench	
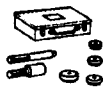	09620–30010 Steering Gear Box Replacer Set	
	(09631–00020) Handle	
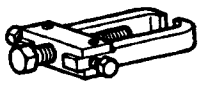	09628–62011 Ball Joint Puller	
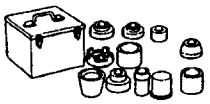	09630–24013 Steering Rack Oil Seal Tool Set	

	(09620–24010) Valve Cup Oil Seal Remover	
	(09620–24020) Valve Cup Oil Seal Replacer	
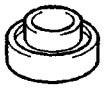	(09620–24030) Valve Cup Bearing Replacer	
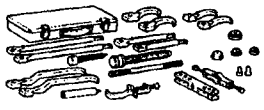	09950–20017 Universal Puller	

SR06L – 01

RECOMMENDED TOOLS

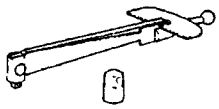	09025–00010 Small Torque Wrench	Total preload

SR06M – 01

EQUIPMENT

Dial indicator	Steering rack
Torque wrench	

SR06N – 01

SSM (SPECIAL SERVICE MATERIALS)

08833–00080	Adhesive 1344, THREE BOND 1344, LOCTITE 242 or equivalent	Pinion bearing adjusting screw Pinion bearing adjusting screw lock nut Rack guide spring cap

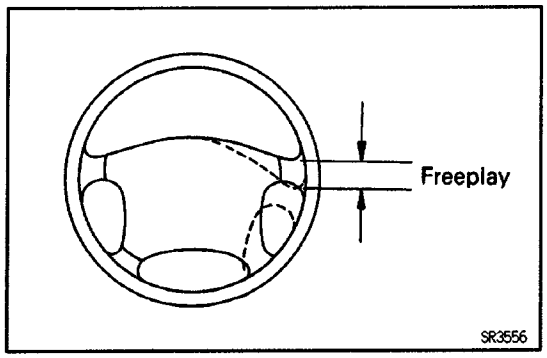

ON–VEHICLE INSPECTION

SR06V–01

CHECK THAT STEERING WHEEL FREEPLAY IS CORRECT

With the vehicle stopped and tires pointed straight, ahead, rock the steering wheel gently back and forth with light finger pressure.

Freeplay should not exceed the maximum.

Maximum freeplay:

30 mm (1.18 in.)

If incorrect, repair.

POWER STEERING

DESCRIPTION

EHPS (Electro–Hydraulic Power Steering)

In conventional and ordinary hydraulically–controlled power steering, hydraulic pressure needed for control is generated when the pump is turned by the engine. In the EHPS, the pump is turned by an electric motor.

The ECU controls the voltage acting on the pump motor according to the movement of the steering wheel and the vehicle speed. The pump motor speed is changed accordingly to modulate the hydraulic pressure being generated in the pump.

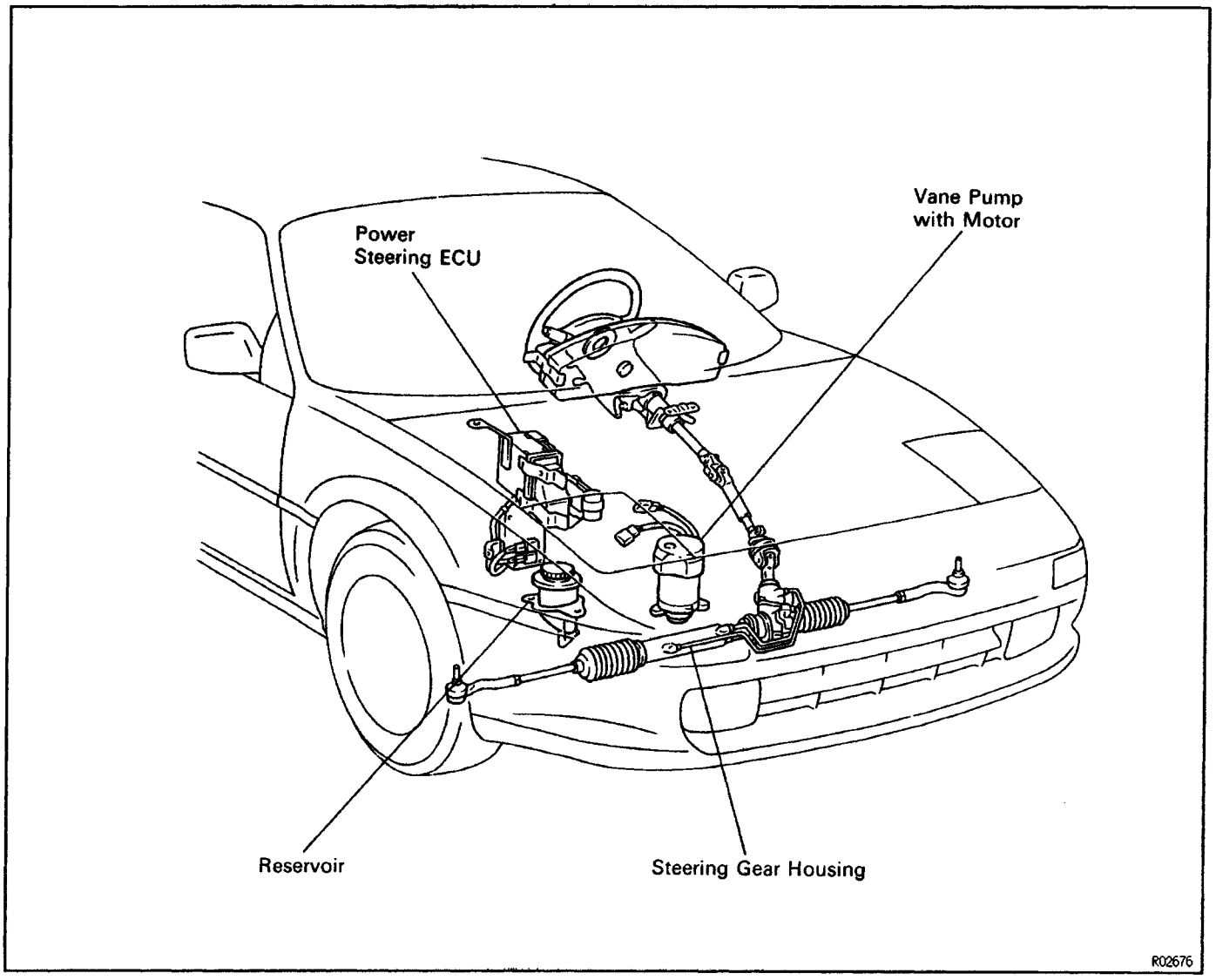

SR06Q–01

NEUTRAL (STRAIGHT–AHEAD) POSITION

Fluid from the pump is sent to the control valve. If the control valve is in the neutral position, all the fluid will flow through the control valve into the relief port and back to the pump. At this time, hardly any pressure is created and because the pressure on the cylinder piston equal on both sides, the piston will not move in either direction.

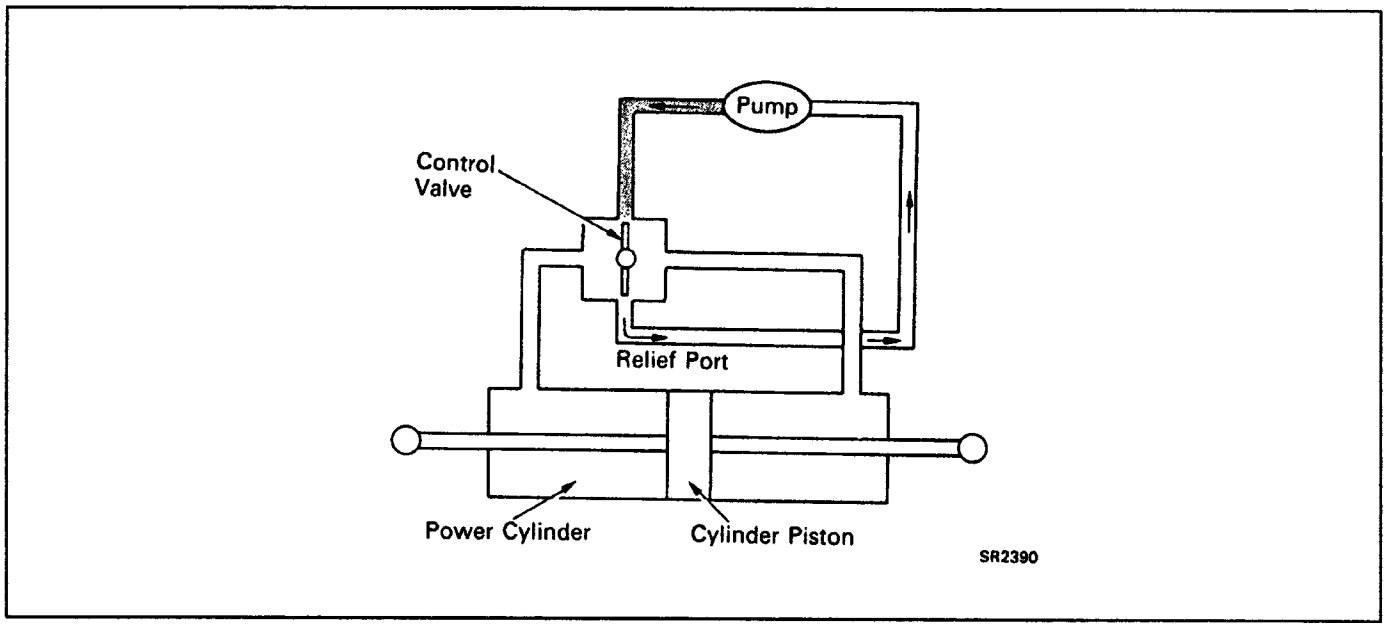

SR06R–01

WHEN TURNING

When the steering main shaft is turned in either direction, the control valve also moves, closing one of the fluid passages. The other passage then opens wider, causing a change in fluid flow volume and, at the same time, pressure is created. Consequently, a pressure difference occurs between both sides of the piston and the piston moves in the direction of the lower pressure so that the fluid in the cylinder is forced back to the pump through the control valve.

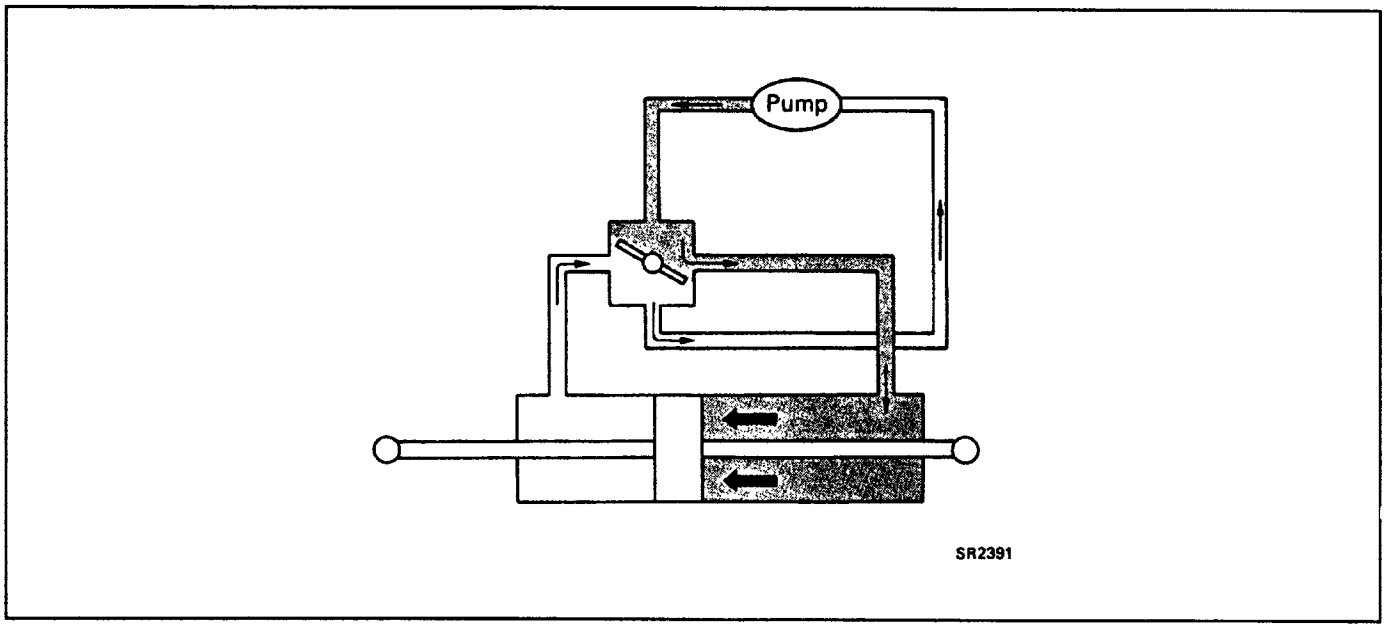

SR06S–01

SERVICE HINT

Trouble with the power steering system usually involves hard steering resulting from lack of assist. In such cases, before attempting to make repairs, you should determine whether the trouble lies with the pump or with the gear housing. To do this, use a pressure gauge to perform an on–vehicle inspection.

ON–VEHICLE INSPECTION

Power steering is a hydraulic device and problems are normally due to insufficient fluid pressure acting on the piston. This could be caused by either the pump not producing the specified fluid pressure or the control valve in the gear housing not functioning properly so that the proper fluid pressure can not be obtained.

If the fault lies with the pump, the same symptoms will generally occur whether the steering wheel is turned fully to the right or left. On the other hand, if the fault lies with the control valve, there will generally be difference between the amount of assist when the steering wheel is turned to the left and right, causing harder steering. However, if the piston seal of the power cylinder is worn, there will be a loss of fluid pressure whether the steering wheel is turned to the right or left and the symptoms will be the same for both.

Before performing an on–vehicle inspection, a check must first be made to confirm that the power steering system is completely free of any air. If there is any air in the system, the volume of this air will change when the fluid pressure is raised, causing a fluctuation in the fluid pressure so that the power steering will not function properly. To determine if there is any air in the system, check if there is a change of fluid level in the reservoir tank when the steering wheel is turned fully to the right or left.

If there is air in the system, it will be compressed to a smaller volume when the steering wheel is turned, causing a considerable drop in the fluid level. If the system is free of air, there will be very little change in the level even when the fluid pressure is raised. This is because the fluid, being a liquid, does not change volume when compressed. The small change in the fluid level is due to expansion of the hoses between the pump and gear housing when pressure rises.

Also, air in the system sometimes causes abnormal noise in the pump or gear housing when the steering wheel is fully turned in either direction.

This on–vehicle inspection must be performed every time after overhauling or, repairing the pump or gear housing to ensure that the power steering is working properly.

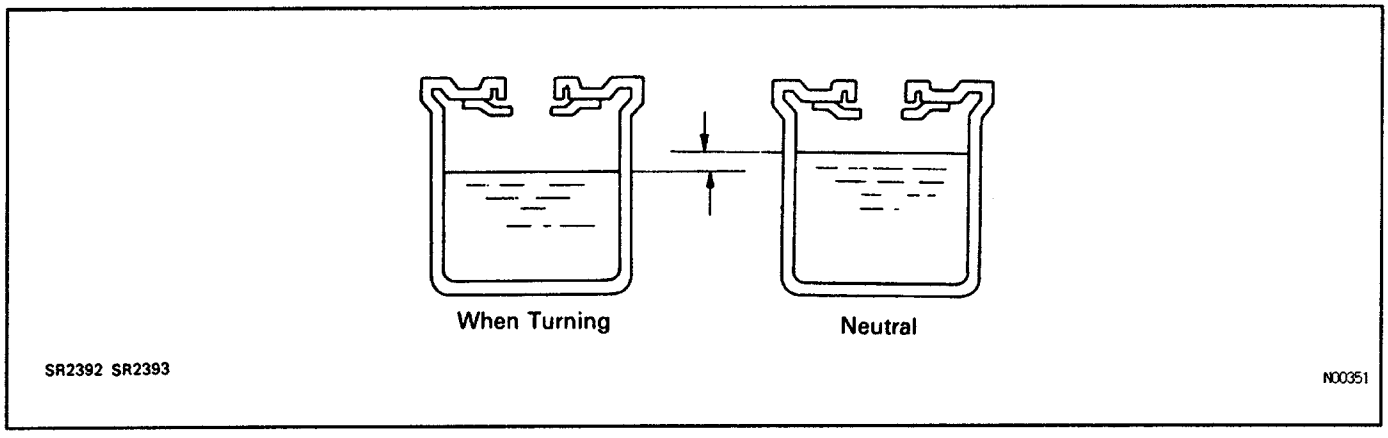

GEAR HOUSING

If the gear housing is secured directly in a vise during overhaul, there is danger of deforming it, so always first secure it in the SST provided (rack and pinion steering rack housing stand) before placing it in the vise.

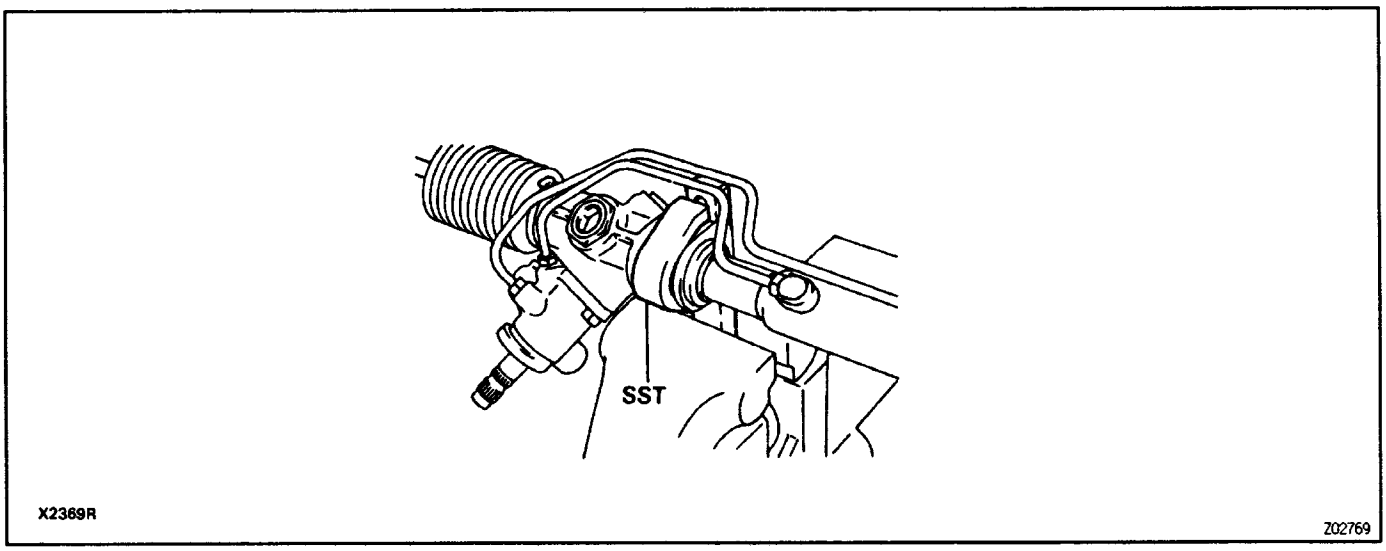

The oil seals on both sides of the power cylinder are for the prevention of leakage of the high pressure fluid which acts on the piston. Always use new oil seals when reassembling and be very careful not to scratch or damage them.

Because of the high pressure, even the slightest scratch will cause fluid leakage, resulting in an inoperative power steering system.

Also, be very careful not to scratch the sliding portion of the rack which makes contact with the oil seals. When removing the rack ends from the rack, it is very easy to cause a burr when holding the tip of the rack with a wrench. Therefore, before assembling the rack, first check the tip for burrs and remove any with an oil stone.

Teflon rings are used for the piston and control valve. These teflon rings are highly durable against wear, but if it is necessary to replace them, be careful not so stretch the new ones. After installing a teflon ring into its groove, snug it down into the groove before assembly of the cylinder or housing to prevent possible damage.

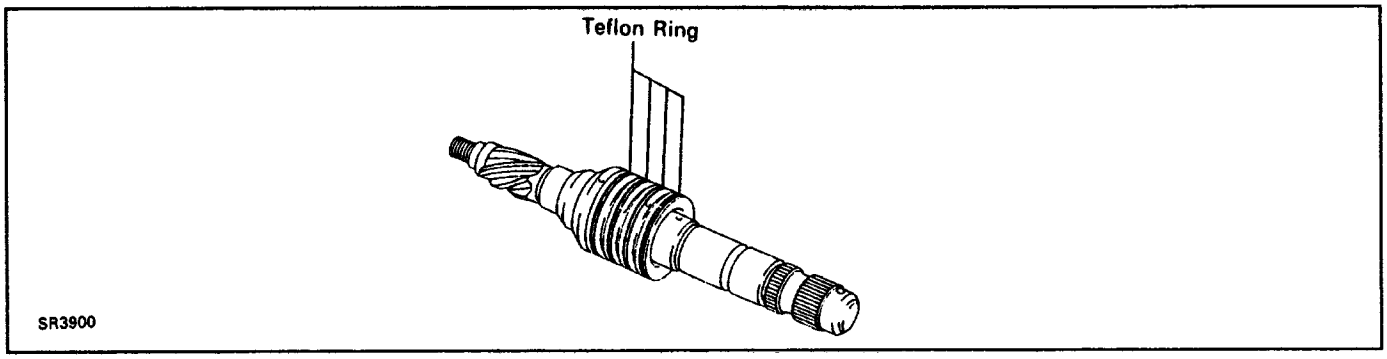

As with the rack and pinion type steering, preload is very important. If the preload is not correct, it could result in such trouble as steering wheel play or shimmy or lack of durability, so always make sure that it is correct.

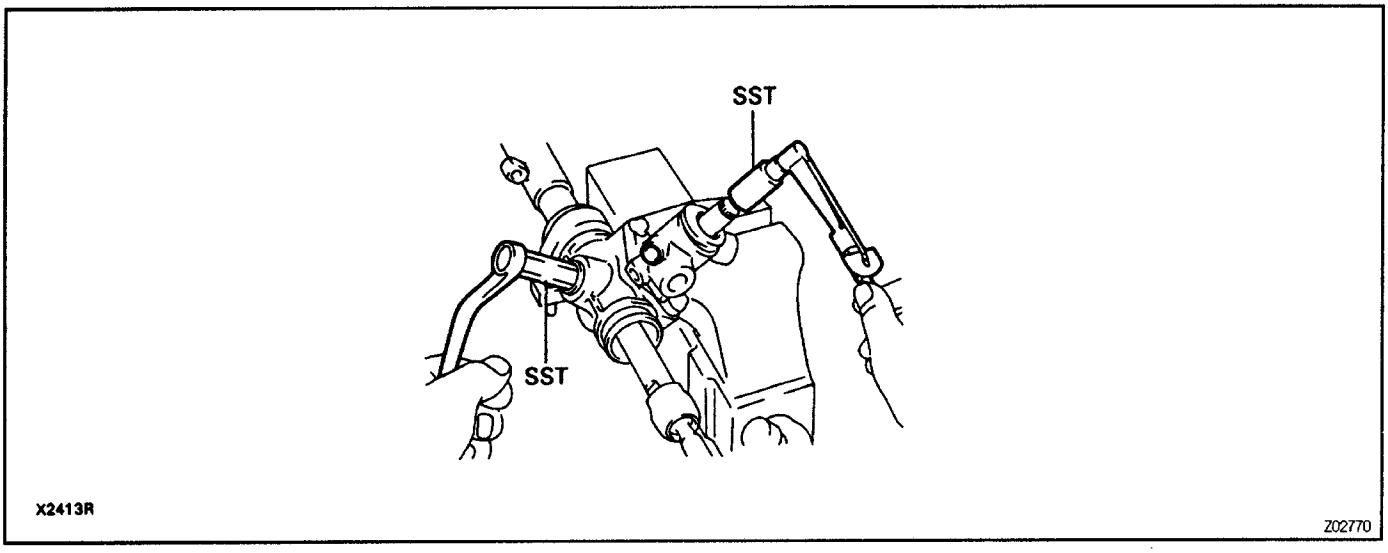

DIAGNOSIS SYSTEM

SR062–01

DESCRIPTION

When a malfunction exists, the corresponding code number is stored in memory until the ignition switch is turned off.

In case of a malfunction other than one identified by code No. 21, the P/S warning light is turned on to warn the driver.

By connecting terminals Tc and E1 of the data link connector, malfunction codes that are stored in memory can be displayed by the way the light blinks.

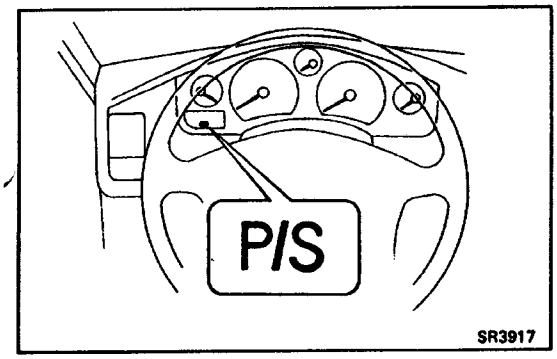

SR063–01

P/S WARNING LIGHT CHECK

(a) Turn the ignition switch to ON and check that the P/S warning light lights up.

(b) Turn the ignition switch to ON and Check that the P/S warning light lights up.

(c) Check that the P/S warning light goes out after approx. 2 seconds.

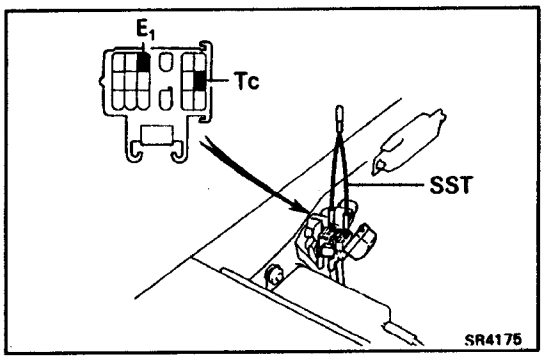

SR064–01

STEERING SENSOR CHECK

(a) Turn the ignition switch to ON.

(b) Using SST, connect terminals Tc and E1 of the data link connector.

SST 09843–18020

NOTICE: Never make a mistake with the terminal connection position as this will cause a malfunction.

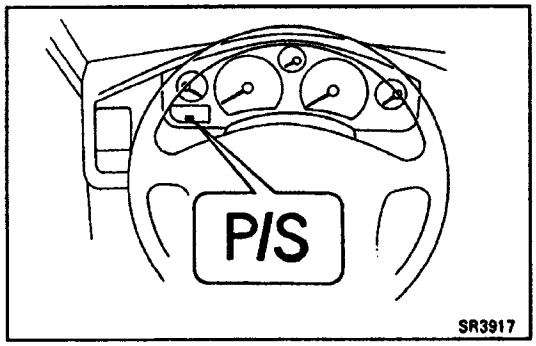

(c) Check that the warning light condition changes according to the steering angle and the vehicle speed, as shown below.

Vehicle Speed / Steering Angle	Below 20 km/h (12 mph)	Above 20 km/h (12 mph)
Less than 36 degrees	BLINK	**ON**
More than 36 degrees	OFF	OFF

HINT:
The steering angle is defined as 0° at the steering position at which the ignition switch and terminals Tc and E1 are turned on simultaneously.
This check is not performed when a diagnostic code has been stored in memory.

V01011

SR085–01

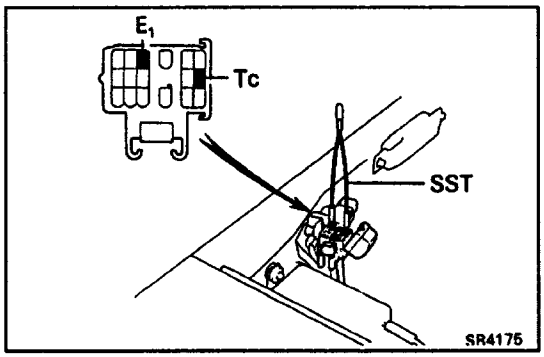

DIAGNOSTIC CODE CHECK

1. OUTPUT DIAGNOSTIC CODE

(a) Turn the ignition switch to ON.

(b) Using SST, connect terminals Te and E1 of the data link connector.
SST 09843–18020

NOTICE: Never make a mistake with the terminal connection position as this will cause a malfunction.

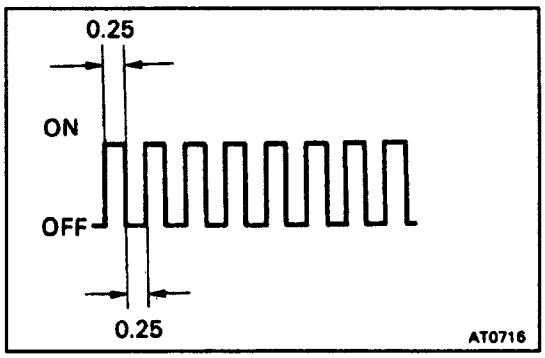

2. READ DIAGNOSTIC CODE

Read the diagnostic code as indicated by the number of times the P/S warning light blinks.

- Normal code indication

The light will blink 2 times per second.

- Malfunction code indication

In the event of a malfunction, the light will blink. The first number of the code No. will equal the first digit of a 2–digit diagnostic code, and after a 1.5 second pause, the 2nd number of the code No. will equal the 2nd digit. If there are two or more codes, there will be a 2.5 second pause between each.
After all the codes have been output, there will be a 4.0 second pause and they will all the repeated.
HINT: in the event of a number of trouble codes, indication will begin from the smaller numbered code to the larger.

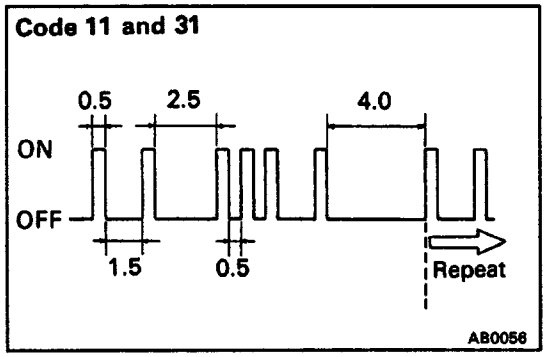

SR066–01

DIAGNOSTIC CODES

Code No.	Blink Pattern	Diagnosis	Trouble Area	Warning Light	PS Operation
11	 AB0057	No electric current being supplied to power steering motor	• Wire harness and connector between battery and power steering motor • Wire harness and connector between ECU and power steering motor • Power steering relay • Power steering motor • ECU	**ON**	Stopped (*l)
12	 FI1389	Short–circuit in power steering relay coil circuit	• Wire harness and connector between ECU and power steering relay • Power steering relay • ECU	**ON**	Stopped (*l)
21	 FI1609	Power steering motor temperature is abnormally high	• Wire harness and connector between ECU and power steering motor • Power steering motor • ECU	OFF	Disconti–nued (.2)
22	 FI1392	Abnormally high current being supplied to power steering motor	• Wire harness and connector between ECU and powersteering driver • Power steering driver • ECU	**ON**	Stopped (*l)
31	 FI1394	Wearing out of power steering motor brush	• Wire harness and connector between ECU and power steering motor • Power steering motor • ECU	**ON**	Continues

*1: Until fault is fixed and ignition is turned OFF, then ON.

*2: Returns when temp. of PS pump drops.

V01012

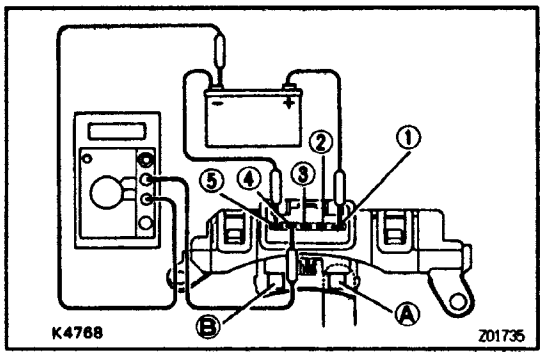

ELECTRONIC CONTROL COMPONENTS INSPECTION

SR07B–01

STEERING SENSOR

(a) Connect the positive (+) lead from the battery to terminal G) and the negative (–) lead to terminal¿.

(b) Connect the tester as shown in the illustration.

(c) Using a thick card such as a postcard to obstruct light at (A) and (B), measure the resistance between ground and terminal (2) or (4) when the lights are exposed or obstructed according to the table below:

Light Exposure Condition	Terminal (2) – Ground	Terminal (4) – Ground
Ⓐ and Ⓑ exposed	Approx. 100 Ω	Approx. 100 Ω
Ⓐ and Ⓑ obstructed	∞	∞
Only Ⓐ is obstructed	∞	Approx. 100 Ω
Only Ⓑ is obstructed	Approx. 100 Ω	∞

SR07C–01

SPEED SENSOR

(See page BE–81)

POWERTRAIN CONTROL MODULE ENGINE (PCME)

(See page FI–406)

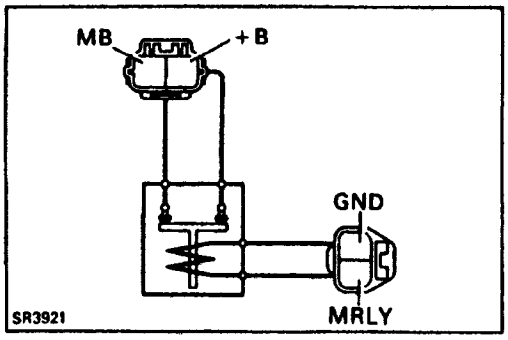

SR07E–01

POWER STEERING RELAY

(a) Inspect the relay continuity between terminals as shown.

MRLY	GND	+B	MB
○	○		

V01014

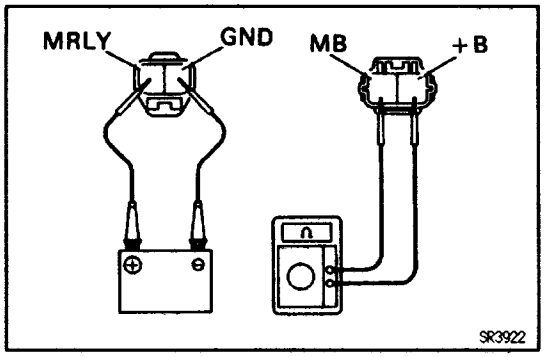

(b) Connect the positive (+) lead from the battery to terminal MRLY and the negative (–) lead to terminal GND.

(c) Check that there is continuity between terminals +B and MB.

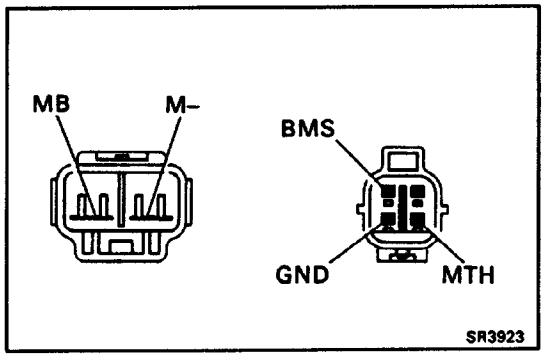

SR067 – 01

POWER STEERING MOTOR

(a) Inspect the motor continuity between terminals as shown.

Condition \ Terminal	MB	M–	MTH	BMS	GND
Motor brushes installed	○	○	○	○	○
Motor brushes removed	○	○	○		

V01055

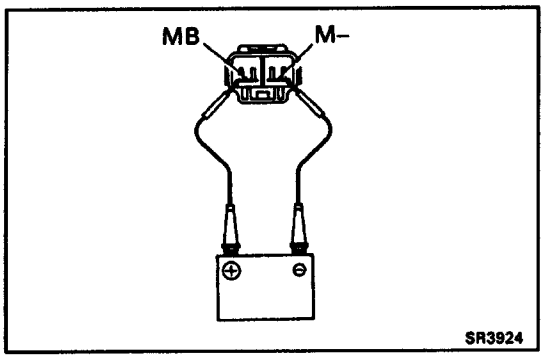

(b) Connect the positive (+) lead from the battery to terminal M B and the negative (–) lead to terminal M –, check that the motor turns.

NOTICE:

- **Be careful about fluid flying about.**
- **Do not run the motor more than is necessary.**

SR070 01

POWER STEERING DRIVER

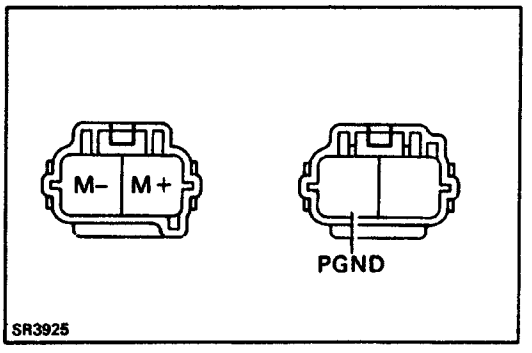

(a) Inspect continuity between terminals on the driver side connector.

1V1–	M+	PGND
○	▶ ○	

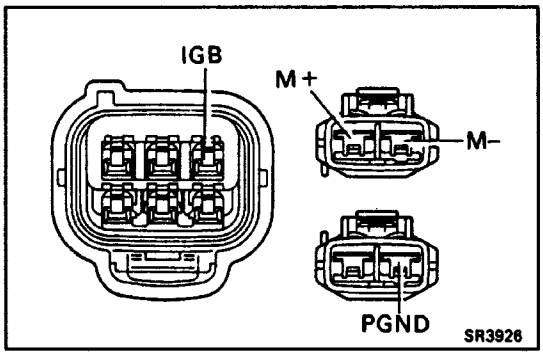

(b) Disconnect the connectors and inspect the connectors on the wire harness side as shown.

Check for	Tester Connection	Condition		Specified Value
Continuity	PGND – Ground	Constant		Continuity
	M+ – M–	Constant		Continuity
Voltage	IGB – Ground	Ignition switch	OFF	0 V
			ON	Battery voltage

V01016

SR07N–01

POWER STEERING ECU

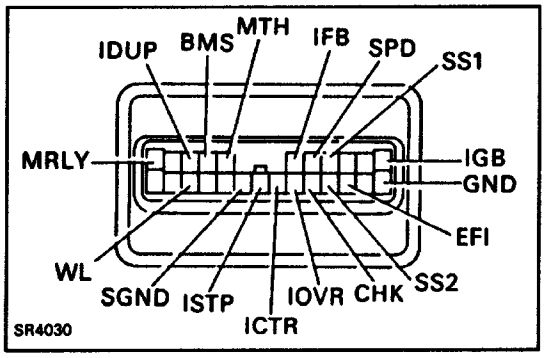

(a) Check that there is continuity between terminals GND and SGND.

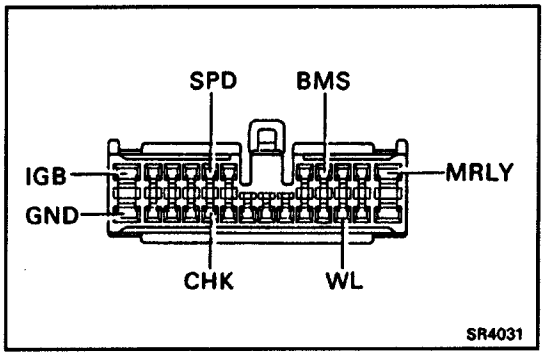

(b) Disconnect the connector and inspect the connector on the wire harness die as shown.

Check for	Tester Connection	Condition		Specified Value
Continuity	G N D – Ground	Constant		Continuity
	MRLY – Ground	Constant		Continuity
	6MS – Ground	Power steering motor brushes installed		Continuity
		Power steering motor brushes removed		No continuity
	CHK – Ground	Normal		No continuity
		Connect terminals Te and E, of check connector		Continuity
	SPD – Ground	Ignition switch ON and spin slowly rear wheel		Continuity I No continuity
Voltage	IG6 – Ground	Ignition switch	OFF	0 V
			ON	Battery voltage
	WL – Ground	Ignition switch	OFF	0 V
			ON	Battery voltage

V01017

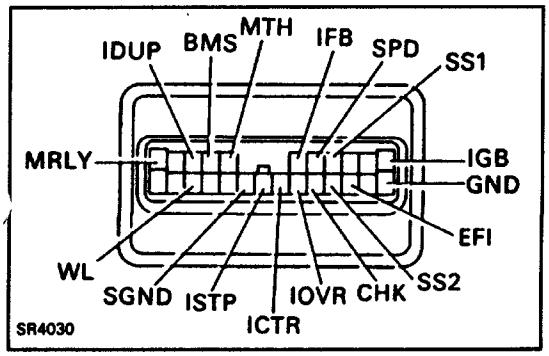

(c) Inspect the system circuit with the connector con–nected.

Tester Connection	Condition	Voltage
EFI – Ground	Ignition switch ON and engine stopped	1.5 V or less
	Engine running	4.5 V or more
MRLY – Ground	Engine running	5 V or more
6MS – Ground	Ignition switch ON and power steering motor brushes installed	1.5 V or less
	Ignition switch ON and power steering motor brushes removed	4.5 V or more
SPD – Ground	Ignition switch ON and spin slowly rear wheel	1.5 V or less ↕ 4.5 V or more
SS1 – Ground	Ignition switch ON and turn slowly steering wheel	1.5 V or less ↕ 5 V or more
SS2 – Ground		
CHK – Ground	Connect terminals Tc and E, of check connector	1.5 V or less
	Normal	4.5 V or more
ICTR – SGND	Steering wheel operated with engine running and vehicle speed at 0 km/h (0 mph)	2.3 – 4.8 V
	Steering wheel operated with vehicle speed at 65 km/h (40 mph)	1.8 – 2.4 V

V01018

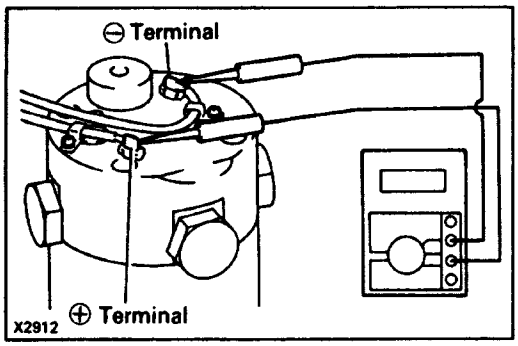

(d) Measure the output voltage (M +) of the power steering driver at the position on the power steering motor shown in the illustration.

Condition	Voltage
Steering wheel operated with engine running and vehicle speed at 0 km/h (0 mph)	9–11 V
Steering wheel operated with vehicle speed at 65 km/h (40 mph)	3–5V

NOTICE: Do not bring the tester into contact with anything other than the terminals; if the tester causes a short between the terminals and the housing, this may result in a blown fuse or incorrect measurement.

V01019

ELECTRONIC CONTROL SYSTEM

PRECAUTION

Do not open the cover or the case of the ECU and various computers unless absolutely necessary. (If the IC terminals are touched, the IC may be destroyed by static electricity.)

LOCATION OF COMPONENTS

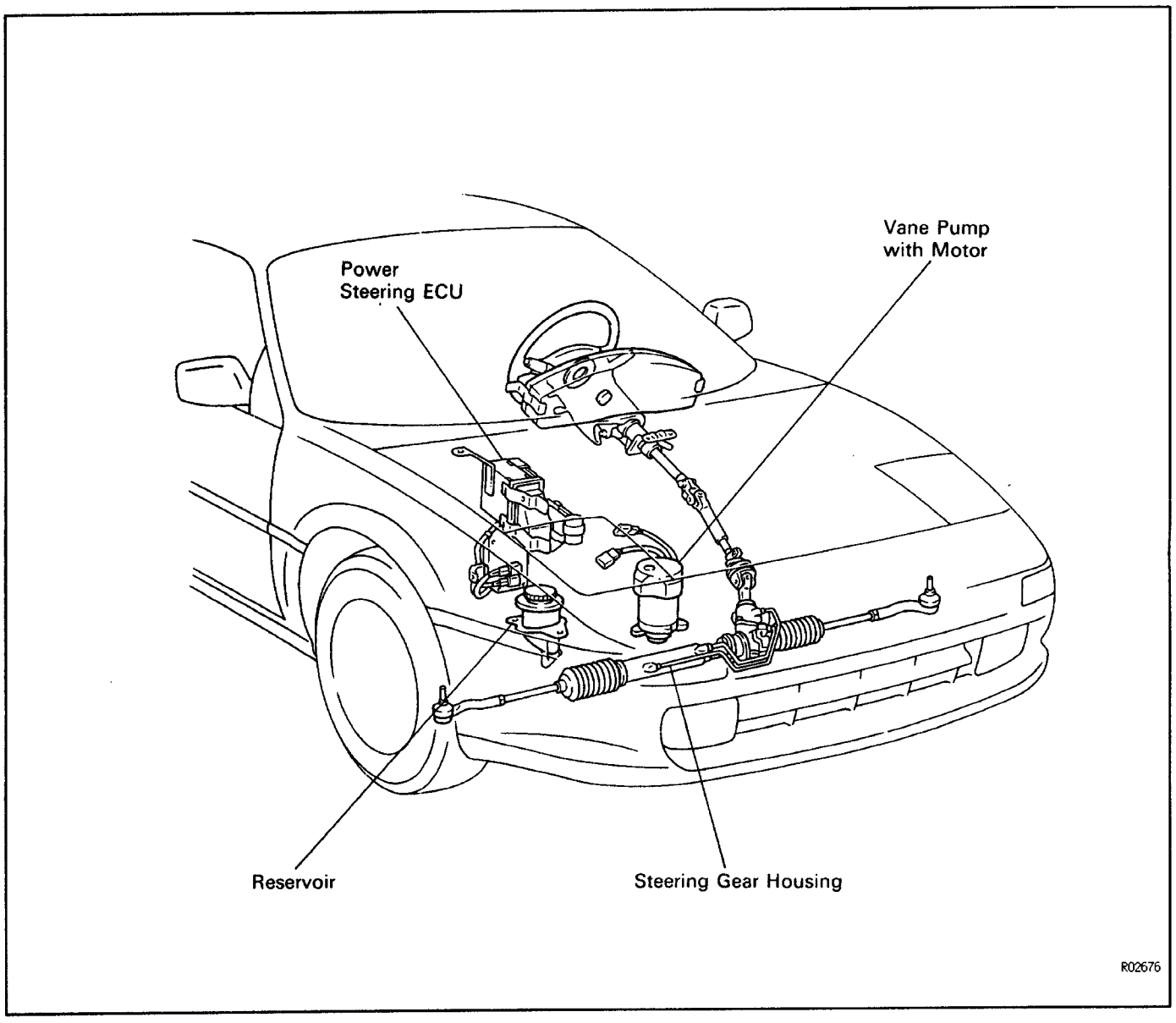

SR061–01

WIRING DIAGRAM

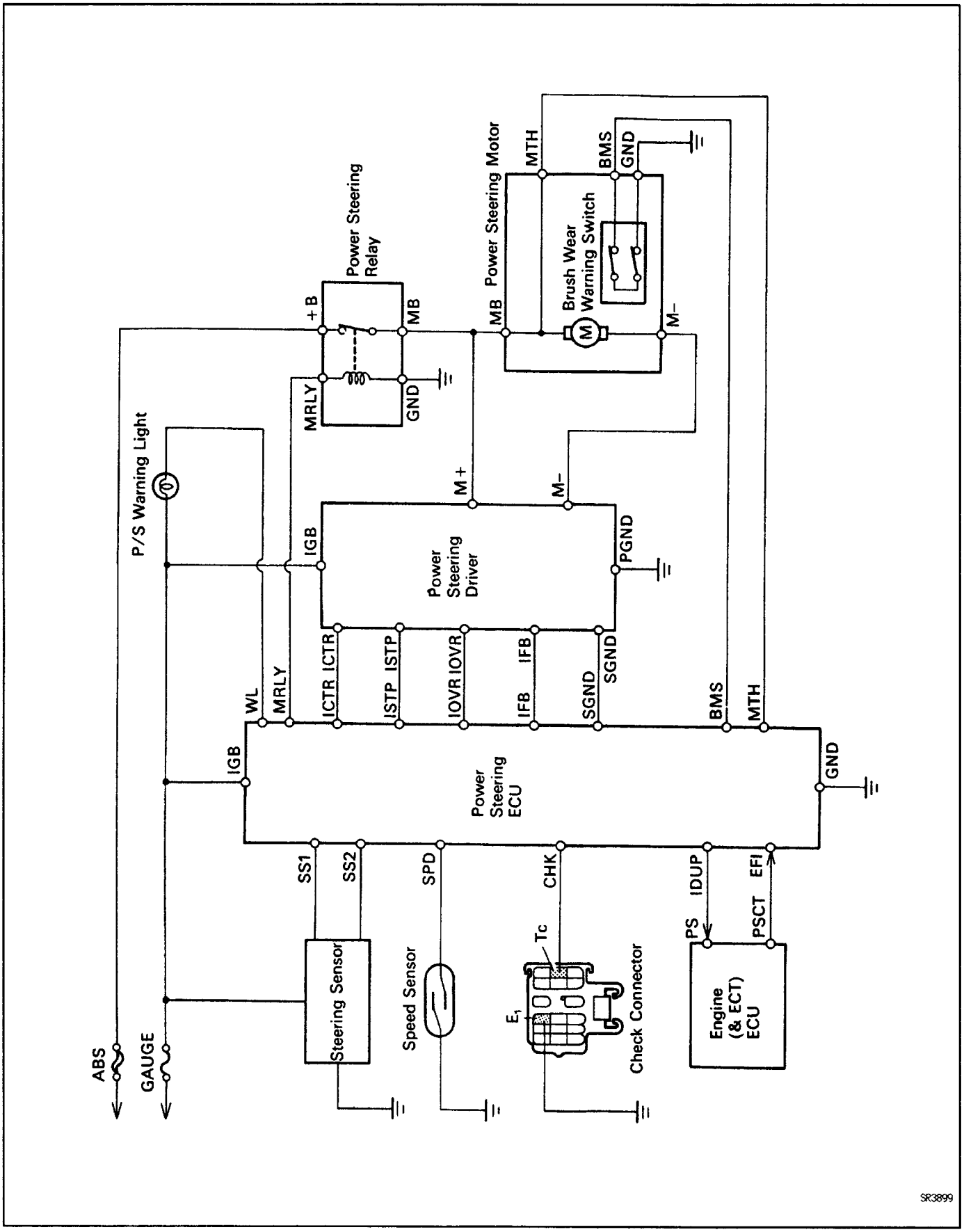

GEAR HOUSING

STEERING GEAR HOUSING REMOVAL AND INSTALLATION

Remove and install the parts as shown.

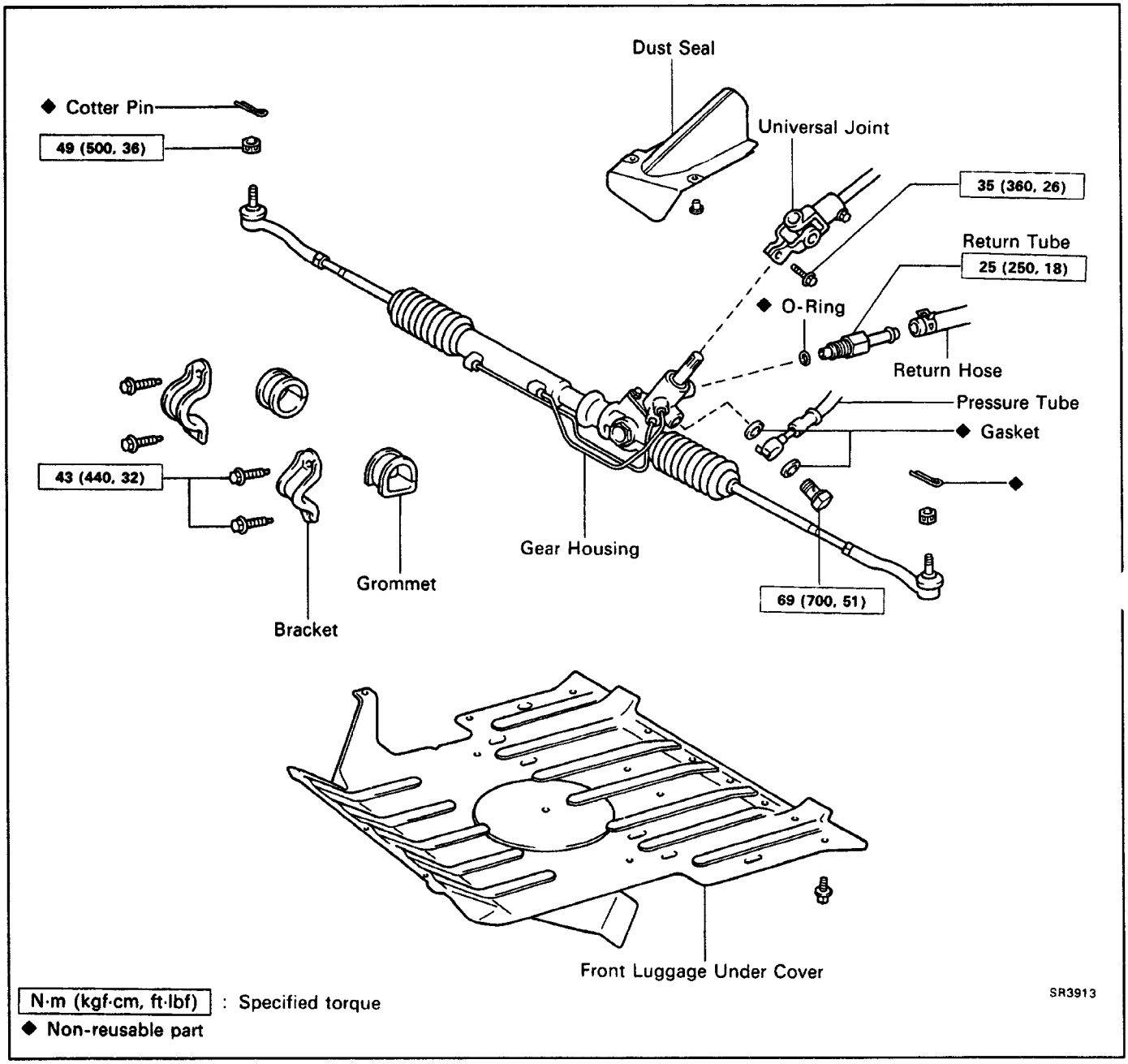

(MAIN POINTS OF REMOVAL AND INSTALLATION)

NOTICE: When disconnecting the universal joint during removal of the gear housing, remove the steering wheel and perform centering of the spiral cable (See page AB–2) If the operation is performed without removing the steering wheel, use the procedure below to make sure the steering wheel is firmly fixed in position and cannot turn.

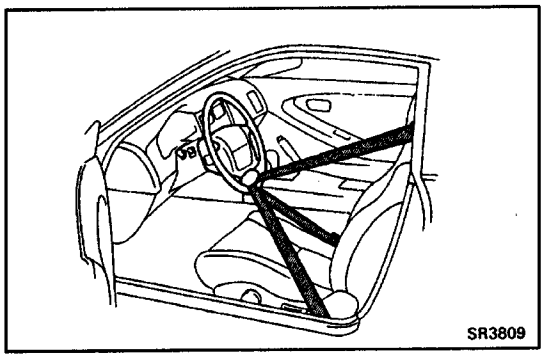

1. DISCONNECT UNIVERSAL JOINT

(a) Position the front wheels facing straight ahead.

(b) Using the seat belt of the driver's seat, fix the steering wheel so that it does not turn.

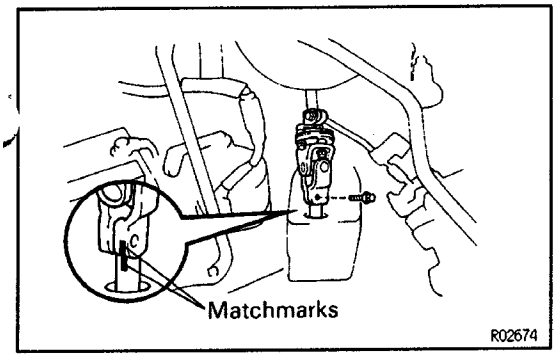

(c) Place matchmarks on the universal joint and control valve shaft.

(d) Loosen the bolt on the upper side of the universal joint, remove the bolt on the lower side and disconnect the universal joint.

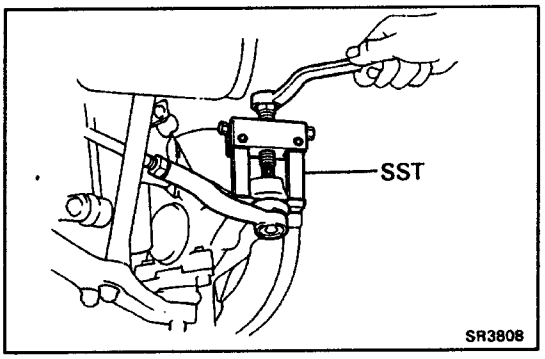

2. DISCONNECT TIE ROD ENDS

(a) Remove the cotter pin and nut.

(b) Using SST, disconnect the tie rod end from the knuckle arm.
SST 09628–62011

3. CONNECT UNIVERSAL JOINT

(a) Set the gear housing so that it matches the dimensions shown below with the gear housing at the center point.

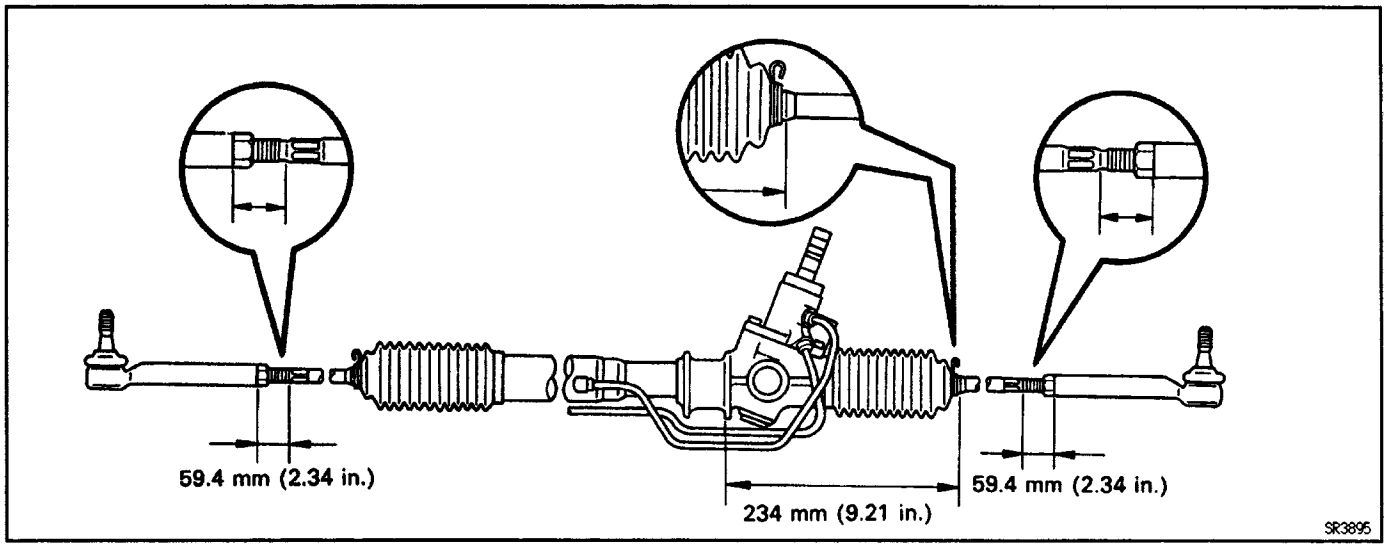

HINT: The dimension of the tie rod end is a reference value, so always adjust the toe–in before tightening the lock nut.

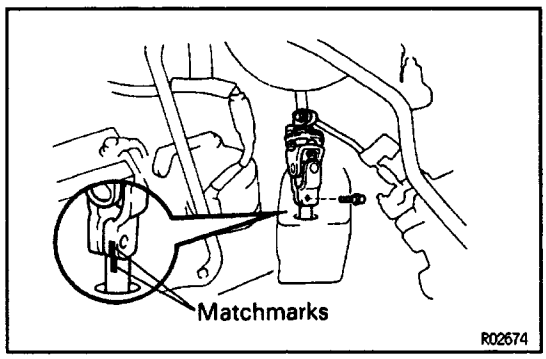

(b) Align rnatchrnarks on the universal joint and control valve shaft and connect them.

4. CENTER SPIRAL CABLE

If the steering wheel has been removed, or the ste–ering wheel may have moved during the operation, always perform contering of the spiral cable.
(See page AB–17)

5. CHECK STEERING WHEEL CENTER POINT

6. CHECK TOE–IN (See page SA–4)

SR07V–01

COMPONENTS

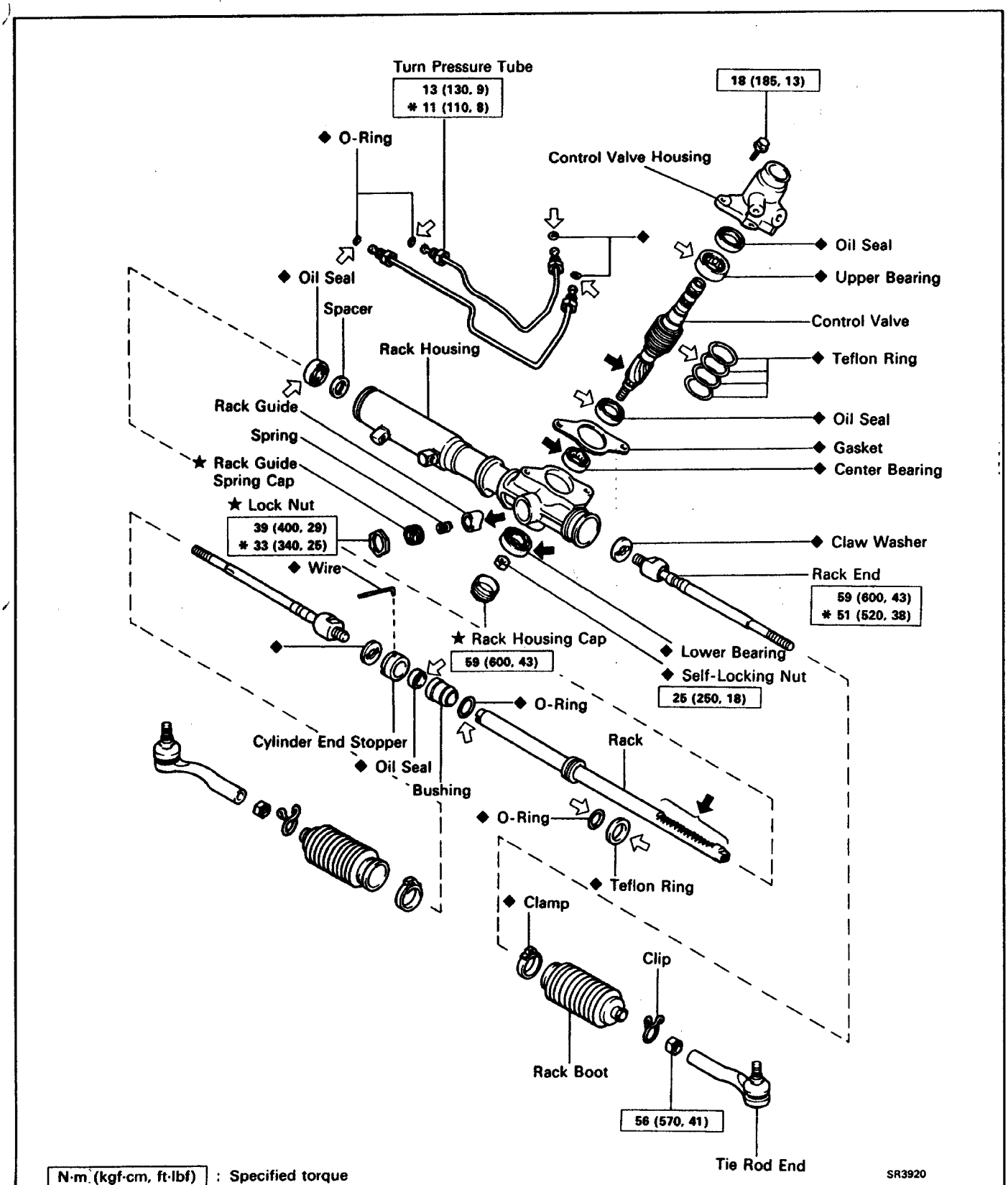

8R07W–01

GEAR HOUSING DISASSEMBLY

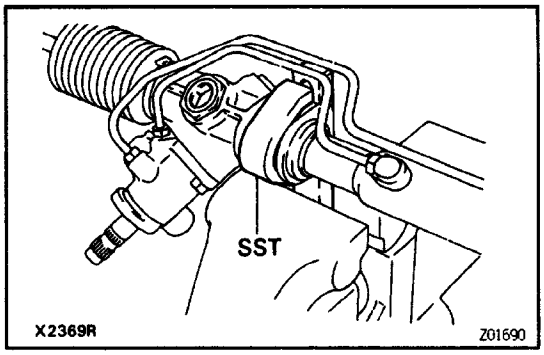

1. CLAMP GEAR HOUSING IN VISE

Using SST, secure the steering gear housing in a vise.
SST 09612–00012

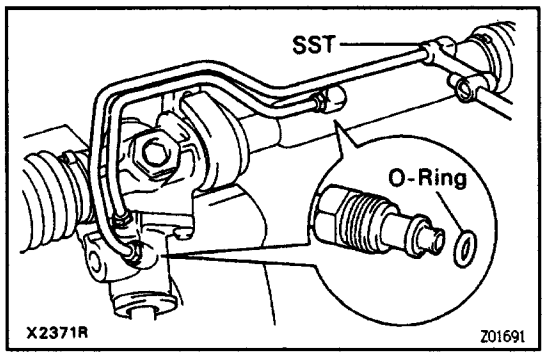

2. REMOVE RIGHT AND LEFT TURN PRESSURE TUBES

(a) Using SST, remove the pressure tubes.
SST 09633–00020

(b) Remove the 0–rings from the tubes.

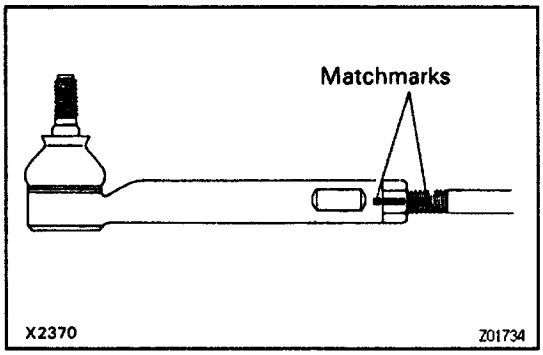

3. REMOVE TIE ROD ENDS

(a) Loosen the lock nuts and place matchmarks on the tie rod ends and rack ends.

(b) Remove the tie rod ends and lock nuts.

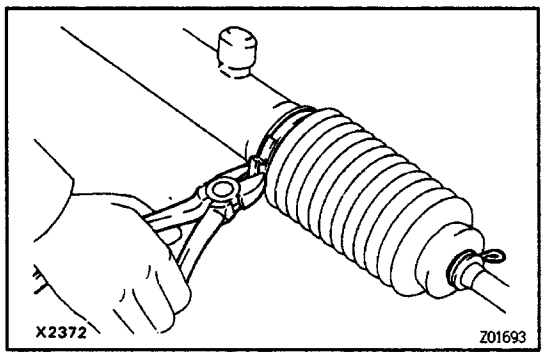

4. REMOVE RACK BOOTS

(a) Remove the clips and clamps.

(b) Remove the rack boots.

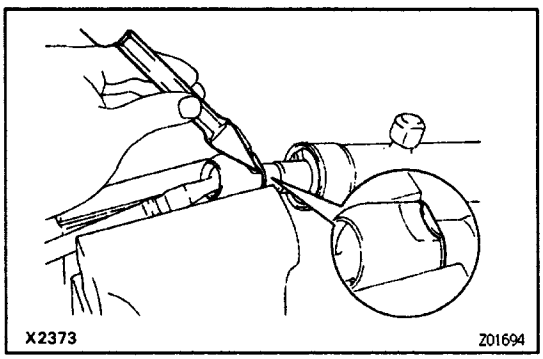

5. REMOVE RACK ENDS AND CLAW WASHERS

(a) Unstake the claw washers.

NOTICE: Avoid any impact to the rack.

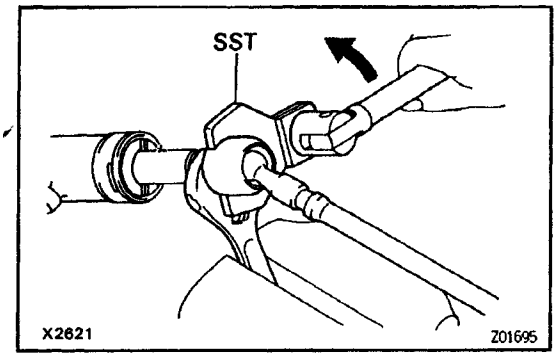

(b) Using SST, remove the rack ends.
SST 09617–10020
(c) Mark the left and right rack ends accordingly.
(d) Remove the claw washers.

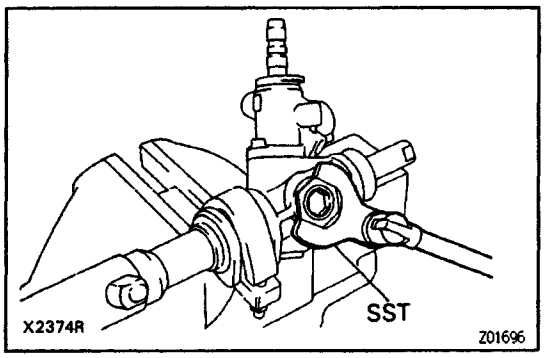

6. REMOVE RACK GUIDE SPRING CAP LOCK NUT
Using SST, remove the rack guide spring cap lock nut.
SST 09612–24014 (09617–22030)

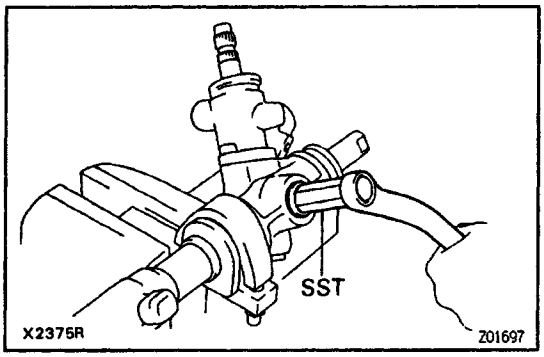

7. REMOVE RACK GUIDE SPRING
Using SST, remove the rack guide spring cap.
SST 09612–10131

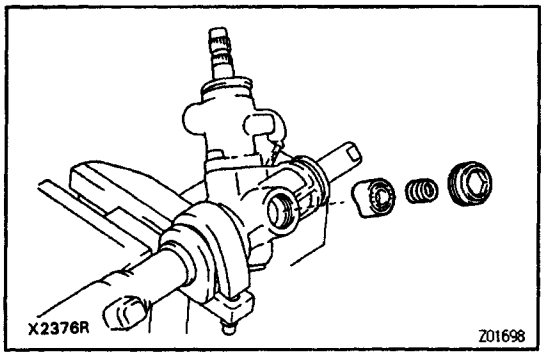

8. REMOVE RACK GUIDE SPRING AND RACK GUIDE

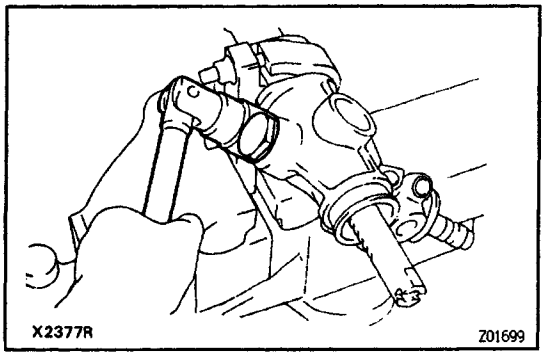

9. REMOVE RACK HOUSING CAP

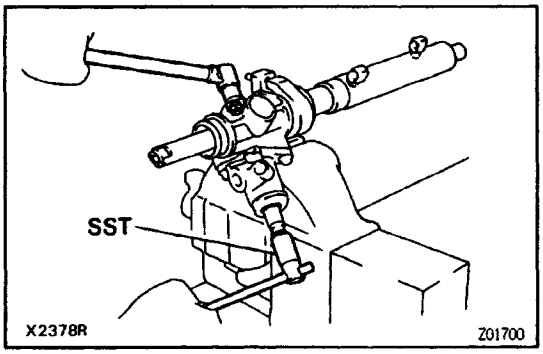

10. REMOVE SELF–LOCKING NUT

Using SST to hold the control valve, remove the self – locking nut.

SST 09616 – 00010

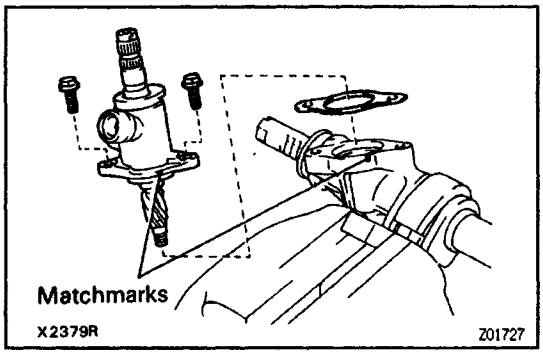

11. REMOVE CONTROL VALVE HOUSING

(a) Place matchmarks on the valve housing and rack housing.

(b) Remove the two bolts.

(c) Pull out the valve housing with the control valve.

(d) Remove the gasket.

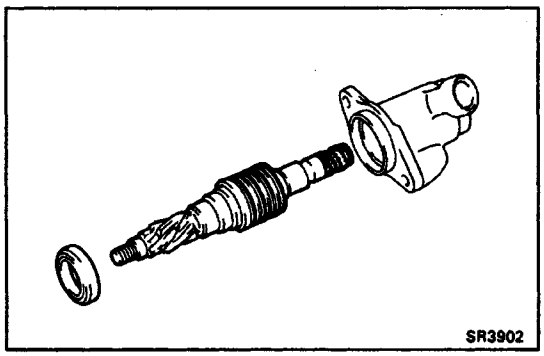

12. REMOVE CONTROL VALVE FROM HOUSING

(a) Tap out the control valve with the oil seal.

(b) Remove the oil seal from the control valve.

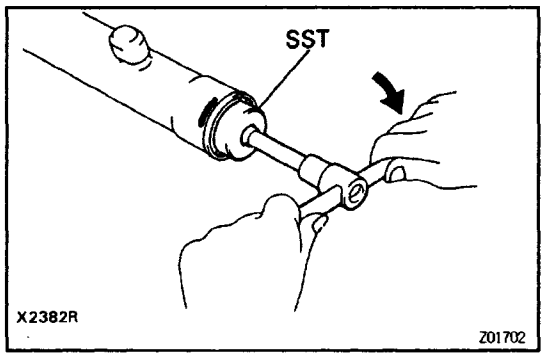

13. REMOVE CYLINDER END STOPPER WIRE

(a) Using SST, turn the cylinder end stopper clockwise until the wire end comes out.

SST 09631 –10021

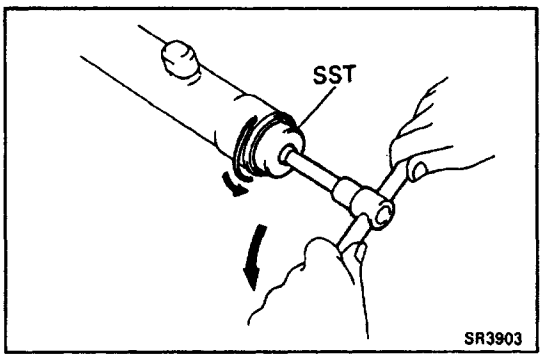

(b) Using SST, turn the cylinder end stopper counter–clockwise, and remove the wire.

SST 09631 –10021

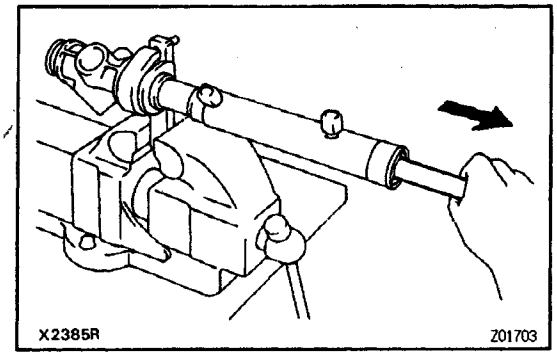

14. REMOVE STEERING RACK

(a) Pull out the steering rack.

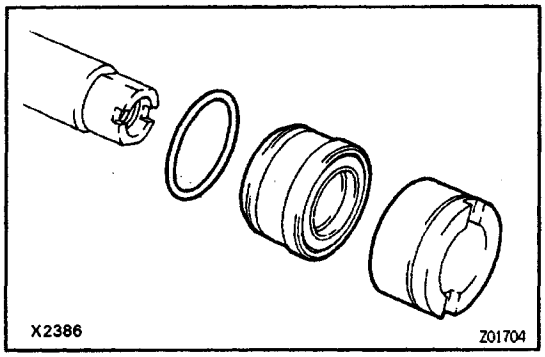

(b) Remove the cylinder end stopper and rack bushing from the rack.

(c) Remove the 0–ring from the bushing.

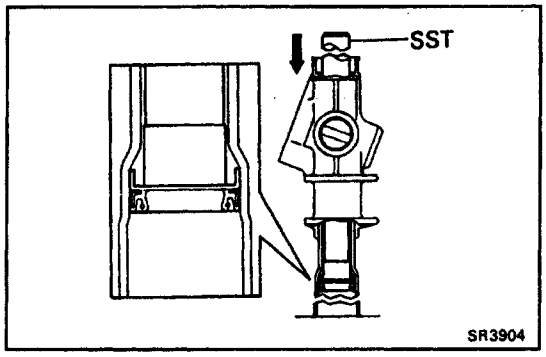

15. REMOVE RACK HOUSING OIL SEAL AND SPACER

Using SST, drive out the spacer and oil seal.

SST 09631 –12020

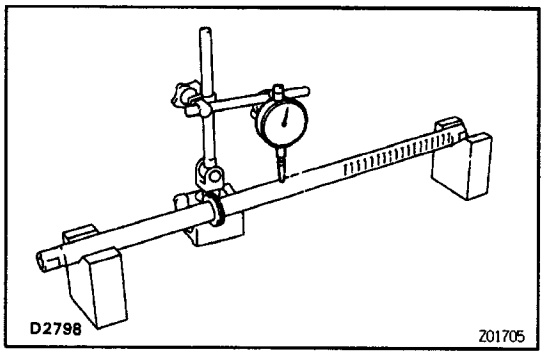

GEAR HOUSING COMPONENTS

8R07X–01

INSPECTION AND REPAIR

NOTICE: When coating the gear housing components with power steering fluid, use TOYOTA POWER STEERING FLUID EH or equivalent which is exclusively for EHPS use.

1. INSPECT RACK

(a) Check the rack for runout and for tooth wear or damage.

Maximum thrust clearance:
0.3 mm (0.012 in.)

(b) Check the rack surface for wear or damage.
If faulty, replace it.

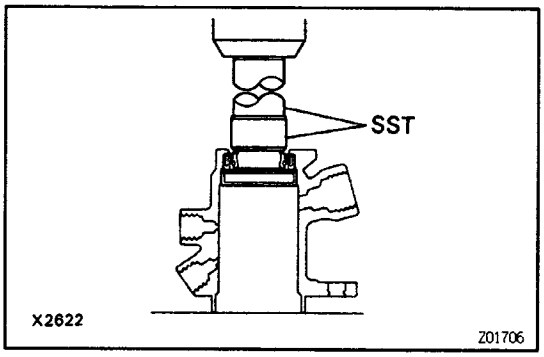

2. IF NECESSARY, REPLACE CONTROL VALVE HOUSING OIL SEAL AND UPPER BEARING

(a) Using SST, press out the oil seal with the bearing.
SST 09620–30010 (09631 –00020),
09630–24013 (09620–24010)

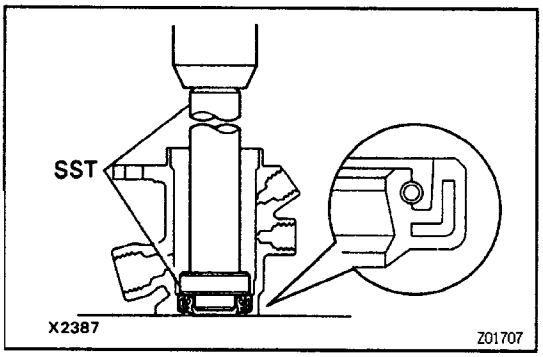

(b) Using SST, press in a new oil seal.
SST 09620–30010 (09631 –00020),
09630–24013 (09620–24013)

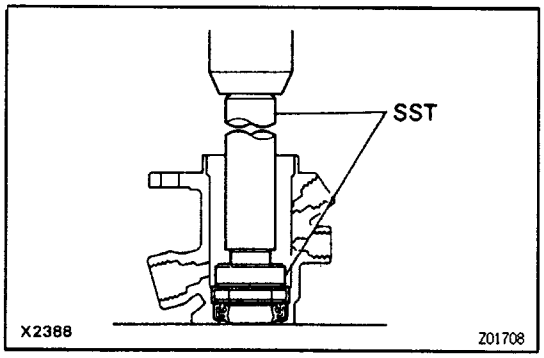

(c) Using SST, press in a new bearing.
SST 09620–30010 (09631 –00020),
09630–24013 (09620–24020)

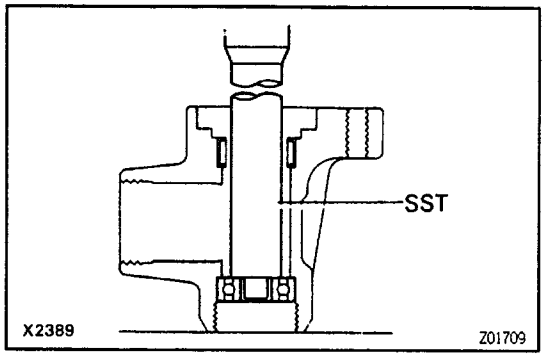

3. IF NECESSARY, REPLACE CONTROL VALVE LOWER BEARING AND CENTER BEARING

(a) Using SST, press out the lower bearing.
SST 09620–30010 (09631 –00020)

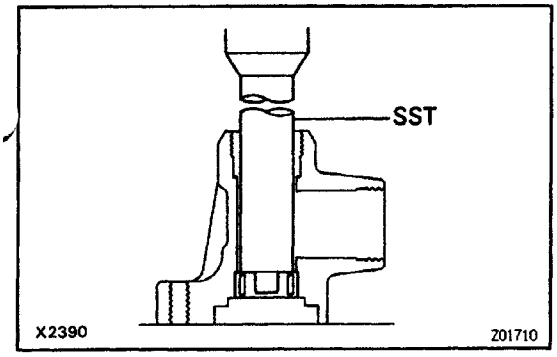

(b) Using SST, press out the center bearing.
SST 09631–12020

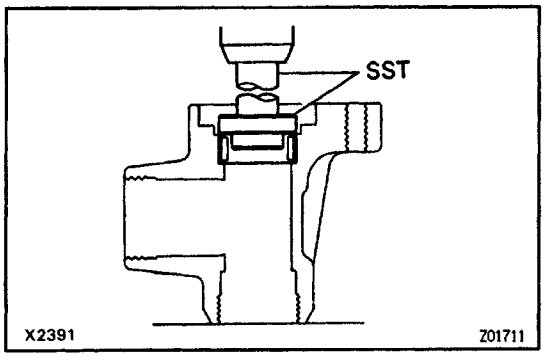

(c) Using SST, press in a new center bearing.
SST 09620–30010 (09631–00020),
09630–24013 (09620–24020)

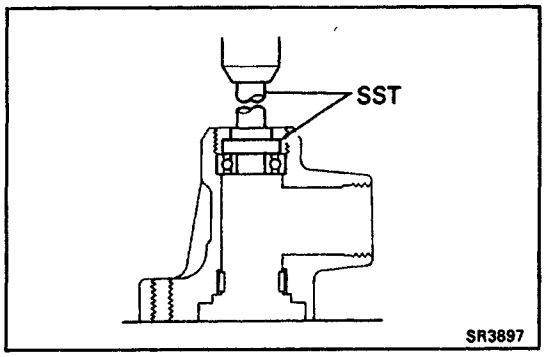

(d) Using SST, press in a new lower bearing.
SST 09620–30010 (09631 –00020),
09631– 20031

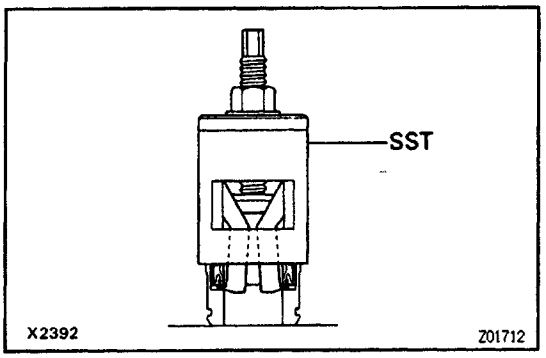

4. IF NECESSARY, REPLACE RACK BUSHING OIL SEAL

(a) Using SST, remove the oil seal.
SST 09612–24014 (09613–22011)

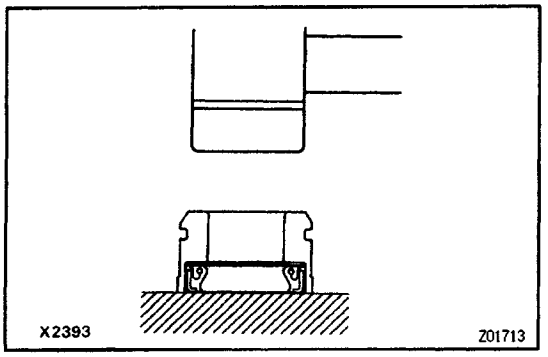

(b) Using a plastic hammer, tap in a new oil seal as shown.

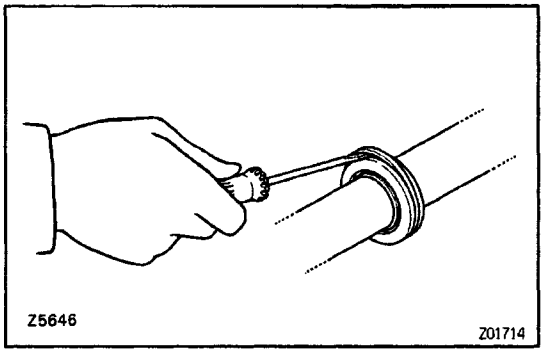

5. IF NECESSARY, REPLACE STEERING RACK TEFLON RING AND O–RING

(a) Remove the teflon ring and 0–ring.

NOTICE: Be careful not to damage the steering rack.

(b) Coat a new O–ring with power steering fluid and install it.

(c) Expand a new teflon ring with your fingers.

NOTICE: Be careful not to over–expand the teflon ring.

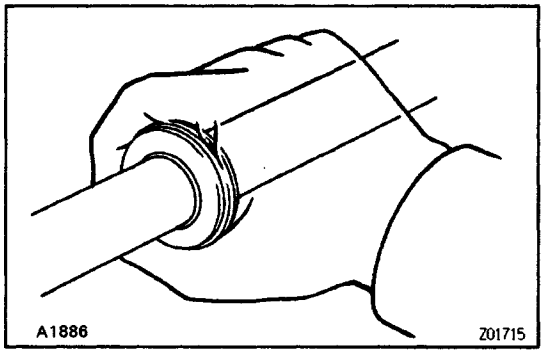

(d) Install the new teflon ring to the steering rack.

(e) Coat the teflon ring with power steering fluid and snug it down with your fingers.

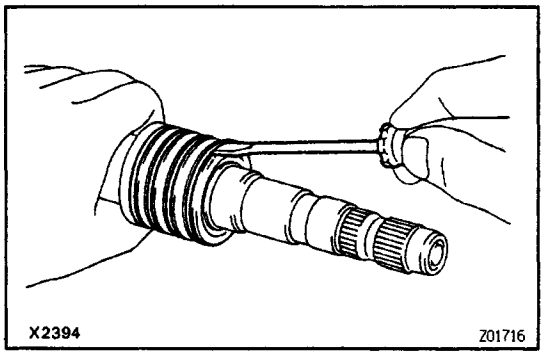

6. IF NECESSARY, REPLACE CONTROL VALVE TEFLON RINGS

(a) Using a screwdriver, remove the teflon rings.

NOTICE: Be careful not to damage the control valve.

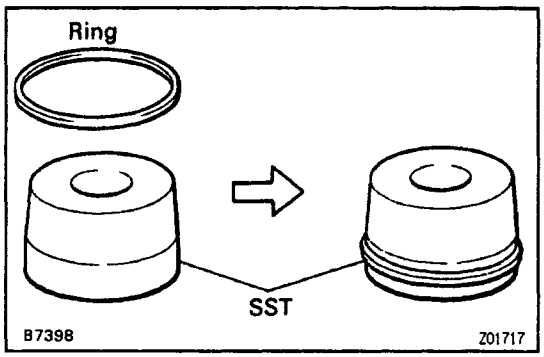

(b) install new teflon rings to SST and expand them.
SST 09631 – 20070

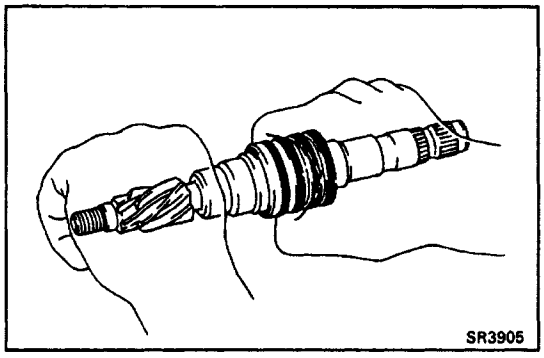

(c) Install the expanded teflon rings to the control vale and snug them with your fingers.

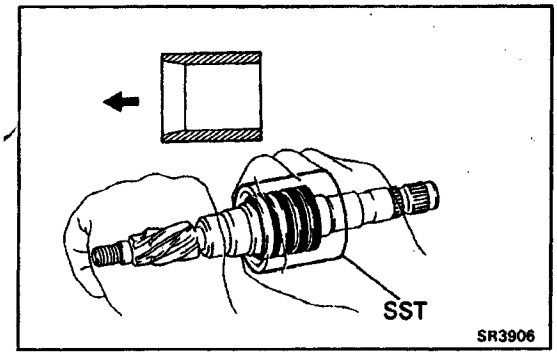

(d) Coat the teflon rings with power steering fluid, and carefully slide the tapered end of SST over the teflon rings to seat the rings.
SST 09631– 20081

SR07Y–01

GEAR HOUSING ASSEMBLY

NOTICE: When coating the gear housing components with power steering fluid use TOYOTA POWER STEERING FLUID EH or equivalent which is exclusively for EHPS use.

1. COAT WITH POWER STEERING FLUID OR MOLYBDENUM DISULPHIDE LITHIUM BASE GREASE

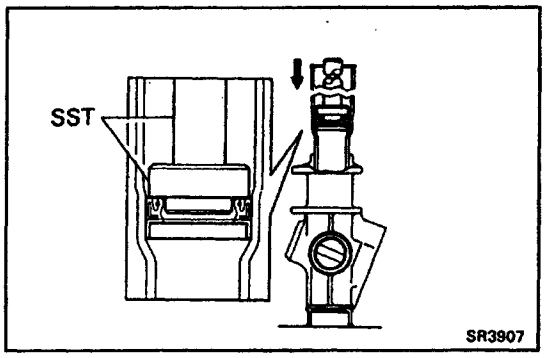

2. INSTALL RACK HOUSING OIL SEAL AND SPACER

(a) Install the spacer into the rack housing.
(b) Using SST, drive in a new oil seal.
SST 09630–24013(09620–24030), 09631–12020

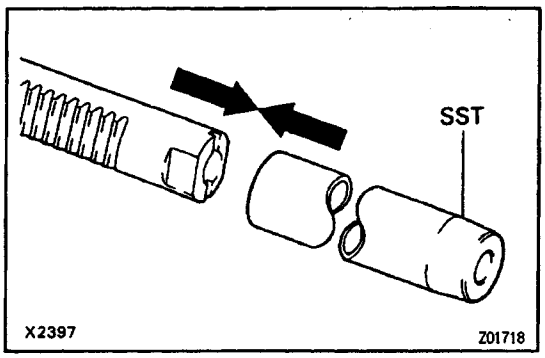

3. INSTALL RACK

(a) Install SST to the rack.

HINT: If necessary, scrape the burrs off the rack teeth end and burnish.
SST 09631 –10040

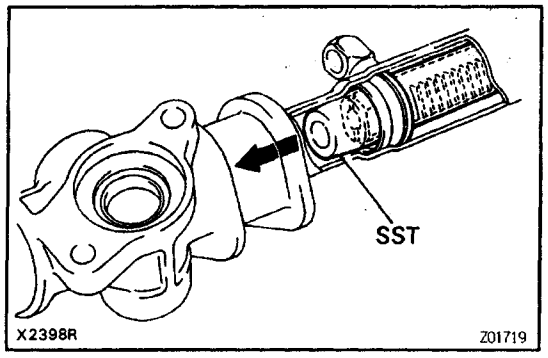

(b) Coat SST with power steering fluid.
(c) Install the rack into the cylinder.
(d) Remove SST.

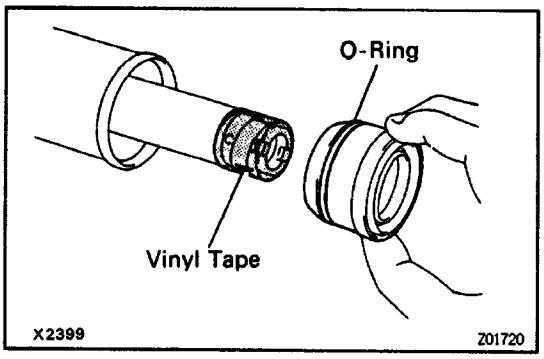

4. INSTALL RACK BUSHING

(a) Coat a new O–ring with power steering fluid and install it to the bushing.

(b) To prevent oil seal lip damage, wind vinyl tape on the steering rack end, and apply power steering fluid.

(c) Install the bushing by pushing it into the cylinder in the direction shown in drawing, without tilting.

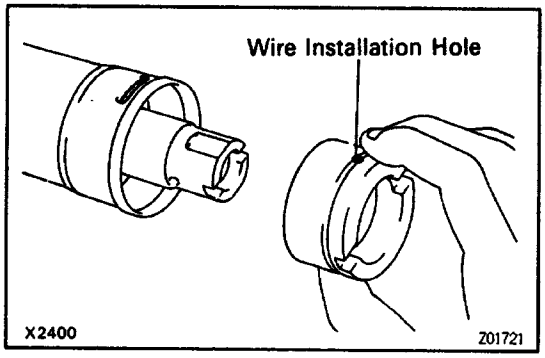

5. INSTALL CYLINDER END STOPPER

(a) Push in the cylinder end stopper until the wire installation hole appears.

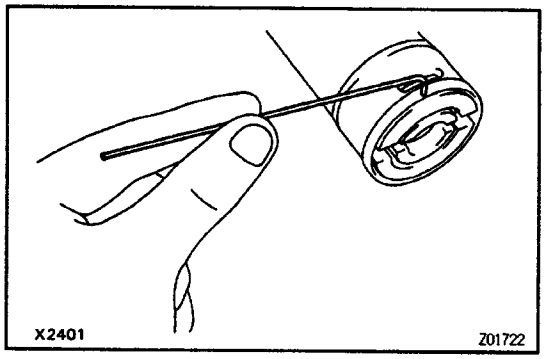

(b) Install a new wire end into the hole.

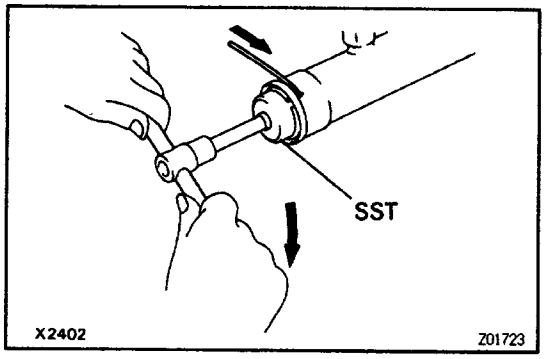

(c) Using SST, turn the cylinder end stopper clockwise until the wire end disappears.

SST 09631 –10021

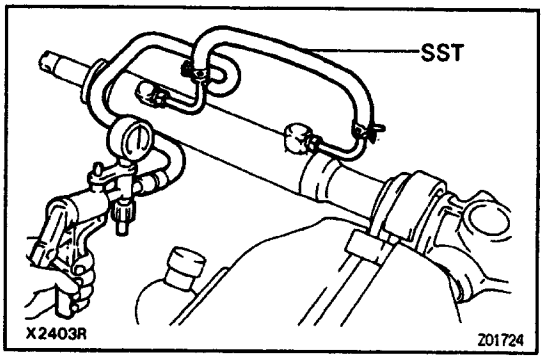

6. AIR TIGHTNESS TEST

(a) Install SST to the unions of the cylinder housing.
SST 09631–12071

(b) Apply 53 kPa (400 mmHg, 15.75 in.–Hg) of vacuum for about 30 seconds.

(c) Check that there is no change in the vacuum.
If there is change in the vacuum, check the installation of the rack housing oil seals.

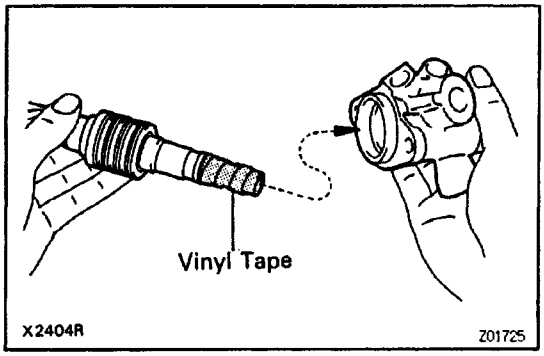

7. INSTALL CONTROL VALVE

(a) Coat the teflon rings with power steering fluid.

(b) Install the control valve into the housing.

NOTICE: To prevent oil seal damage, wind vinyl tape on the serration part of the control valve shaft.

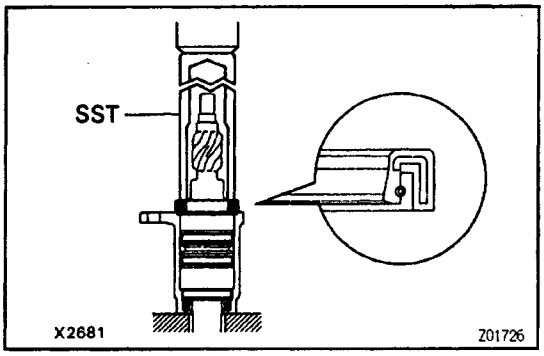

8. INSTALL OIL SEAL

(a) Coat a new oil seal with power steering fluid.

(b) Using SST, install the oil seal as shown.

SST 09612–22011

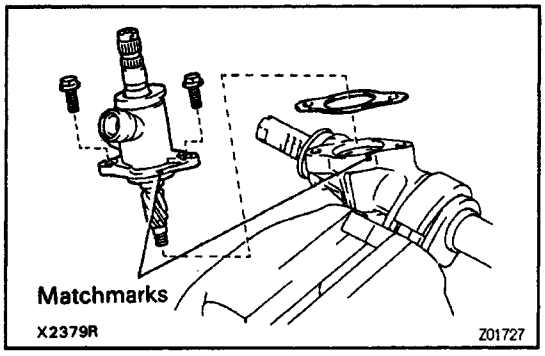

9. INSTALL CONTROL VALVE HOUSING

(a) Place a new gasket on the rack housing.

(b) Align the matchmarks on the valve housing and rack housing.

(c) Torque the two bolts.

Torque: 18 N–m (185 kgf–cm. 13 ft–lbf)

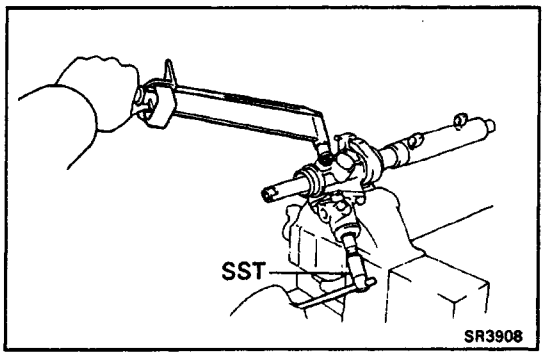

10. INSTALL SELF–LOCKING NUT

Using SST to hold the control valve, install a new self – locking nut.

SST 09616 – 00010

Torque: 25 N–m (250 kgf–cm, 18 ft.lbf)

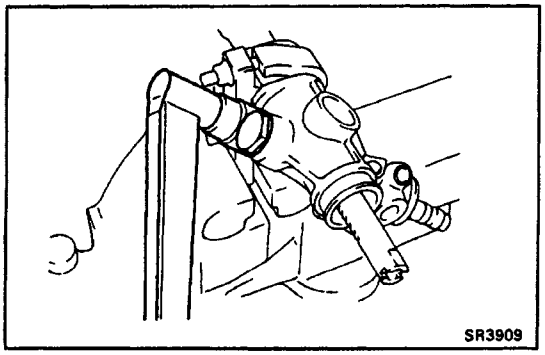

11. INSTALL RACK HOUSING CAP

(a) Apply sealant to 2 or 3 threads of the housing cap.

Sealant: Part No. 08833–00080, THREE BOND 1344, LOCTITE 242 or equivalent

(b) Install the rack housing cap.

Torque: 59 N–m (600 kgf–cm,,43 ft–lbf)

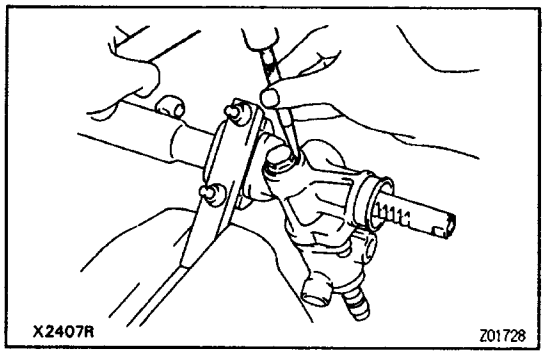

(c) Using a centering punch, stake the cap at two places.

12. INSTALL RACK GUIDE AND RACK GUIDE SPRING

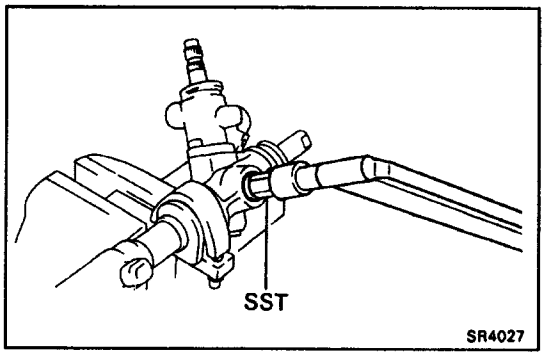

13. ADJUST TOTAL PRELOAD

(a) Apply sealant to 2 or 3 threads of the rack guide spring cap.

Sealant: Part No. 08833–00080, THREE BOND 1344, LOCTITE 242 or equivalent

(b) Using SST, install and torque the spring cap.

SST 09612–10131

Torque: 25 N–m (250 kgf–cm, 18 ft–lbf)

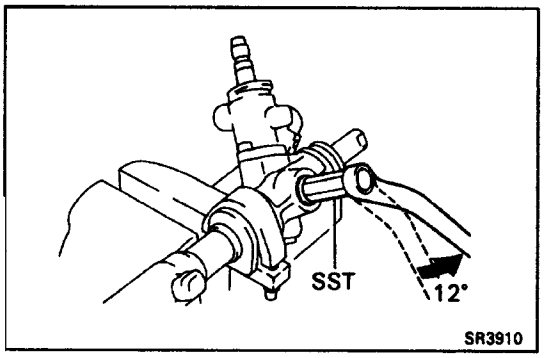

(c) Using SST, return the rack guide spring cap 12°.

SST 09612–10131

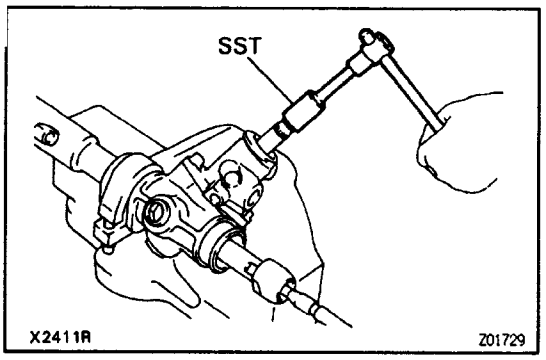

(d) Turn the control vale shaft right and left one or two times.

SST 09616 – 00010

NOTICE: If the rack over strokes, the oil seal will be damaged by the teeth of the rack, so temporarily in stall the rack end so that it does not over stroke.

(e) Loosen the spring cap until the rack guide compres–sion spring is not functioning.

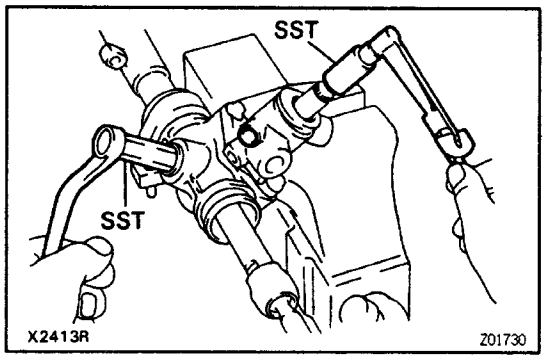

(f) Using SST and a torque meter, tighten the rack guide spring cap until the preload is within specification.

SST 09612–10131 and 09616–00010

Preload (turning):

0.9–1.3 N–m

(9–13 kgf–cm, 7.8–11.3 in.–lbf)

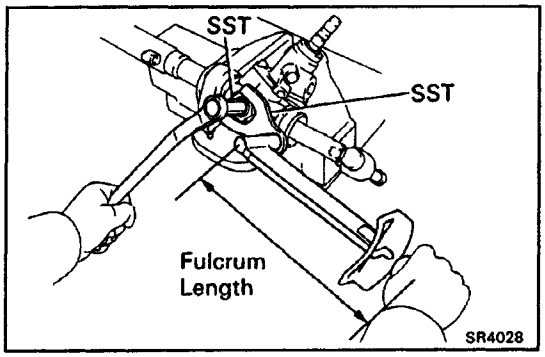

14. INSTALL RACK GUIDE SPRING CAP LOCK NUT

(a) Apply sealant to 2 or 3 threads of the lock nut.

Sealant: Part No. 08833–00080, THREE BOND 1344, LOCTITE 242 or equivalent

(b) Using SST, install and torque the lock nut.

SST 09612–10131, 09612–24014 (09617–22030)

Torque: 33 N–m (340 kgf–cm, 25 ft–lbf)

HINT: Use a torque wrench with a fulcrum length of 340 mm (13.39 in.).

(c) Recheck the total preload.

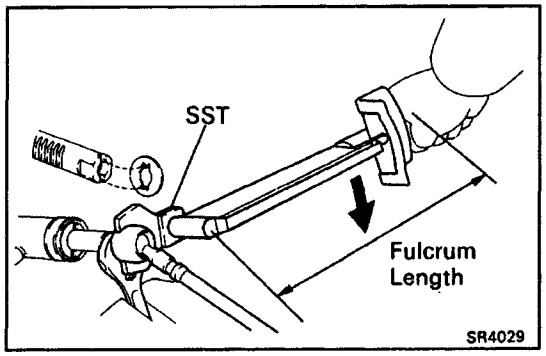

15. INSTALL CLAW WASHERS AND RACK ENDS

(a) Install new claw washers.

HINT: Align the claws of the claw washer with the rack grooves.

(b) Using SST, install and torque the rack ends.

SST 09617–10020

Torque: 51 N–m (520 kgf–cm, 38 ft–lbf)

HINT: Use a torque wrench with a fulcrum length of 340 mm (13.39 in.).

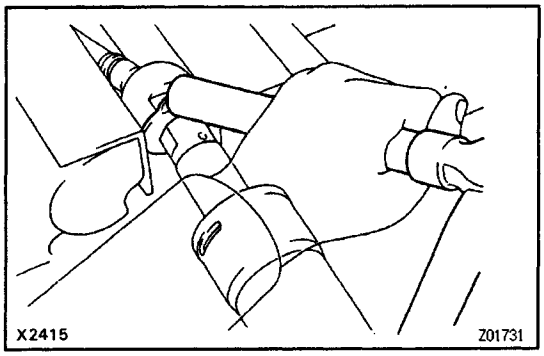

(c) Using a brass bar and hammer, stake the claw washers.

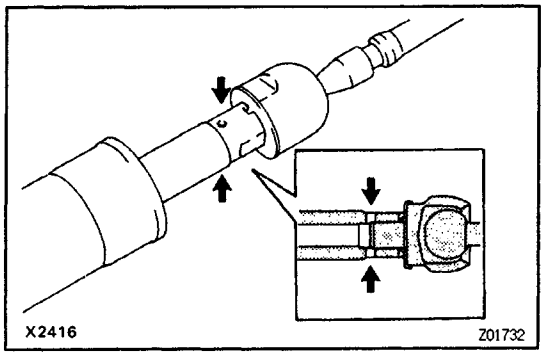

16. INSTALL RACK BOOTS, CLAMPS AND CLIPS

(a) Insure that the rack hole is not clogged with grease.

HINT: If the rack hole is clogged, the pressure inside the boot will change after it is assembled and the steering wheel turned.

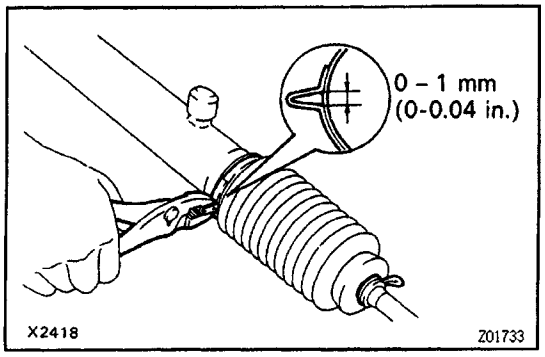

(b) Install the boots.

NOTICE: Be careful not to damage or twist the boots.

(c) Install new clamps.

(d) Install the clips with the ends facing outward.

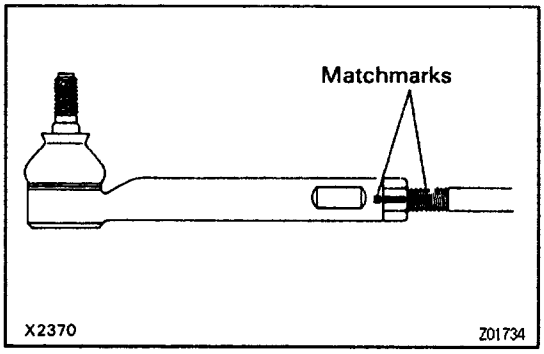

17. INSTALL TIE ROD ENDS

(a) Screw the lock nuts and tie rod ends onto the rack ends until the matchmarks are aligned.

(b) After adjusting toe–in, torque the lock nuts.

Torque: 56 N–m (570 kgf–cm, 41 ft–lbf)

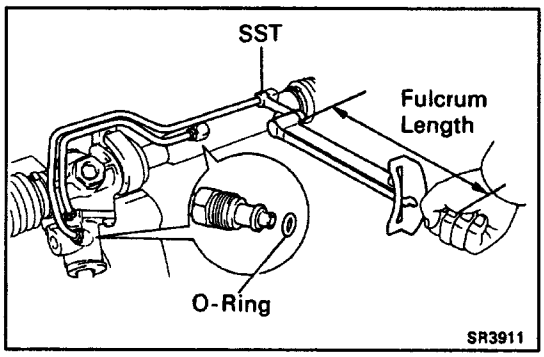

18. INSTALL RIGHT AND LEFT TURN PRESSURE TUBES

(a) Install four new O–rings to the tubes.

(b) Using SST, install the tubes.

SST 09633–00020

Torque: 11 N–m (110 kgf–cm, 8 ft–lbf)

HINT: Use a torque wrench with a fulcrum length of 300 mm (11.81 in.).

ON–VEHICLE INSPECTION

SR07P–01

FLUID LEVEL CHECK

1. KEEP VEHICLE LEVEL

2. BOOST FLUID TEMPERATURE

With the engine idling at 1,000 rpm or less, turn the steering wheel from lock to lock ten or more times to boost fluid temperature.

Fluid temperature:

40˚C or more (104˚F or more)

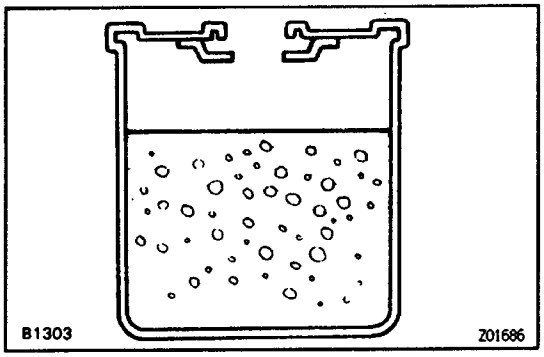

3. CHECK FOR FOAMING OR EMULSIFICATION

HINT: Foaming and emulsification indicate either the existence of air in the system or that fluid level is too low.

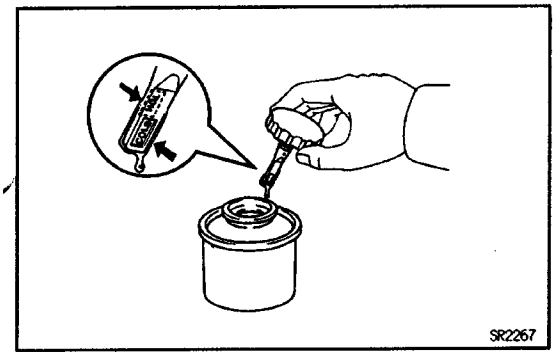

4. CHECK FLUID LEVEL IN RESERVOIR

Check the fluid level and add fluid if necessary.

Fluid:

TOYOTA POWER STEERING FLUID EH (Part No. 08886–01206) or equivalent

HINT: Check that the fluid level is within the HOT LEVEL of the dipstick. If the fluid is cold, check that it is within the COLD LEVEL of the dipstick.

NOTICE: Use only TOYOTA PS fluid EH or equivalent. Otherwise, you may not get expected power assist.

BLEEDING OF POWER STEERING SYSTEM

1. CHECK FLUID LEVEL. IN RESERVOIR TANK

Check the fluid level and add fluid if necessary.

Fluid:

TOYOTA POWER STEERING FLUID EH (Part No. 08886–01206) or equivalent

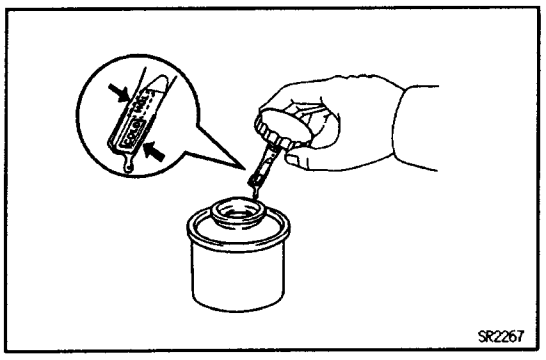

HINT: Check that the fluid level is within the HOT LEVEL of the dipstick. If the fluid is cold, check that it is within the COLD LEVEL of the dipstick.

NOTICE: Use only TOYOTA PS fluid EH or equivalent. Otherwise, you may not get expected power assist.

2. START ENGINE AND TURN STEERING WHEEL FROM LOCK TO LOCK THREE OR FOUR TIMES

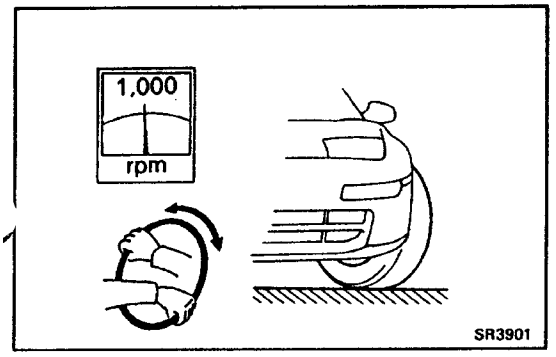

With the engine speed below 1,000 rpm, turn the steering wheel to left or right full lock and keep it there for 2–3 seconds, then turn the wheel to the reverse full lock and keep it there for 2–3 seconds.

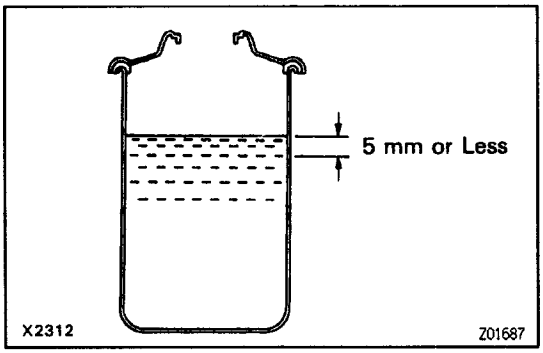

3. CHECK THAT FLUID IN RESERVOIR IS NOT FOAMY OR CLOUDY AND DOES NOT RISE OVER MAXI–MUM WHEN ENGINE IS STOPPED

Measure the fluid level with the engine running. Stop the engine and measure the fluid level.

Maximum rise:

5 mm (0.20 in.)

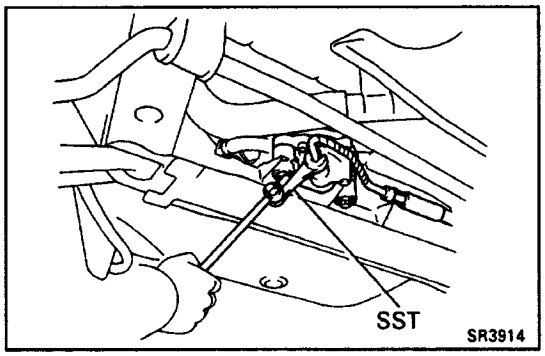

SR07R–01

OIL PRESSURE CHECK

NOTICE: When supplementing the power steering fluid, use TOYOTA POWER STEERING FLUID EH or equivalent which is exclusively for EHPS use.

1. CONNECT PRESSURE GAUGE

(a) Using SST, disconnect the pressure line from the PS pump.
SST 09631 –22020

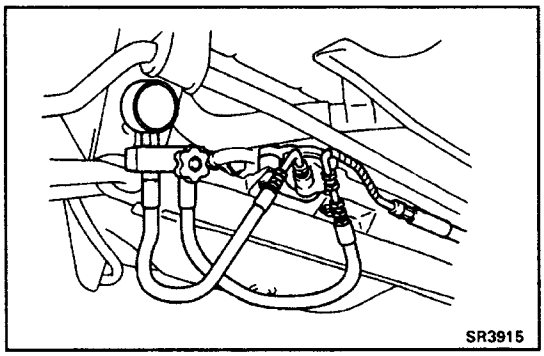

(b) Connect the gauge side of the pressure gauge to the PS pump and the valve side to the pressure line.

(c) Bleed the system. Start the engine and turn the ste–ering wheel from lock to lock two or three times.

(d) Check that the fluid level is correct.

2. CHECK THAT FLUID TEMPERATURE IS AT LEAST 40˚ C (140˚ F)

3. START ENGINE AND RUN IT AT IDLE

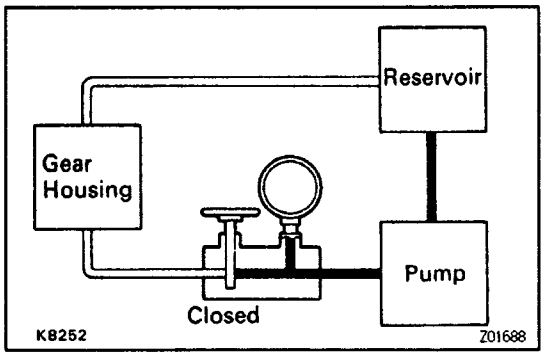

4. CHECK FLUID PRESSURE READING WITH VALVE CLOSED

Close the pressure gauge valve and observe the rea–ding on the gauge while turning the steering wheel.

Minimum pressure:

4,903 kPa (50 kgf/cm^2, 711 psi)

NOTICE:

- **Do not keep the valve closed for than 10 seconds.**
- **Do not let the fluid temperature become too high.**

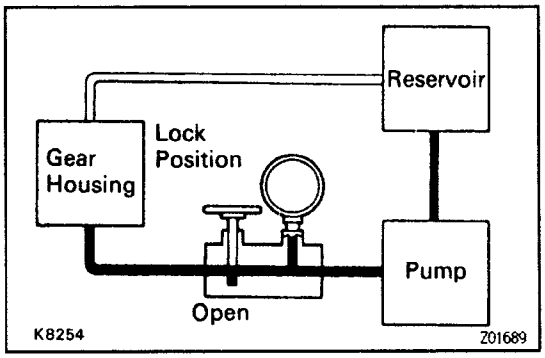

5. CHECK PRESSURE READING WITH STEERING WHEEL TURNED TO FULL LOCK

Be sure the pressure gauge valve is fully opened and the engine idling.

Minimum pressure:

4,903 kPa (50 kgf/cm^2, 711 psi)

NOTICE:

- **Do not maintain lock position for more than 10 seconds.**
- **Do not left the fluid temperature become too high.**

If pressure is low, the gear housing has an internal leak and must be repaired or replaced.

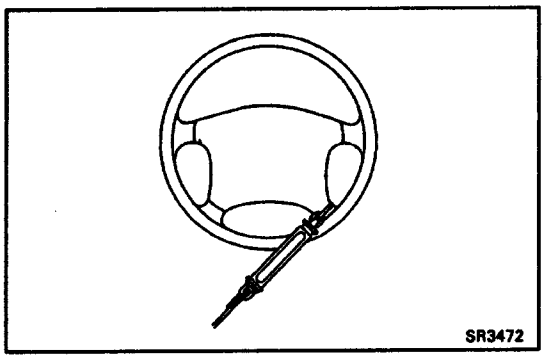

6. MEASURE STEERING EFFORT

(a) Center the steering wheel and run the engine at idle:

(b) Using a spring scale, measure the steering effort in both directions.

Maximum steering effort:

44 N (4.5 kgf, 9.9 lbf)

If steering effort is excessive, repair the power steering unit.

HINT: Be sure to consider the tire type, pressure and contact surface before making your diagnosis.

POWER STEERING PUMP

POWER STEERING PUMP REMOVAL AND INSTALLATION

Remove and install the parts as shown.

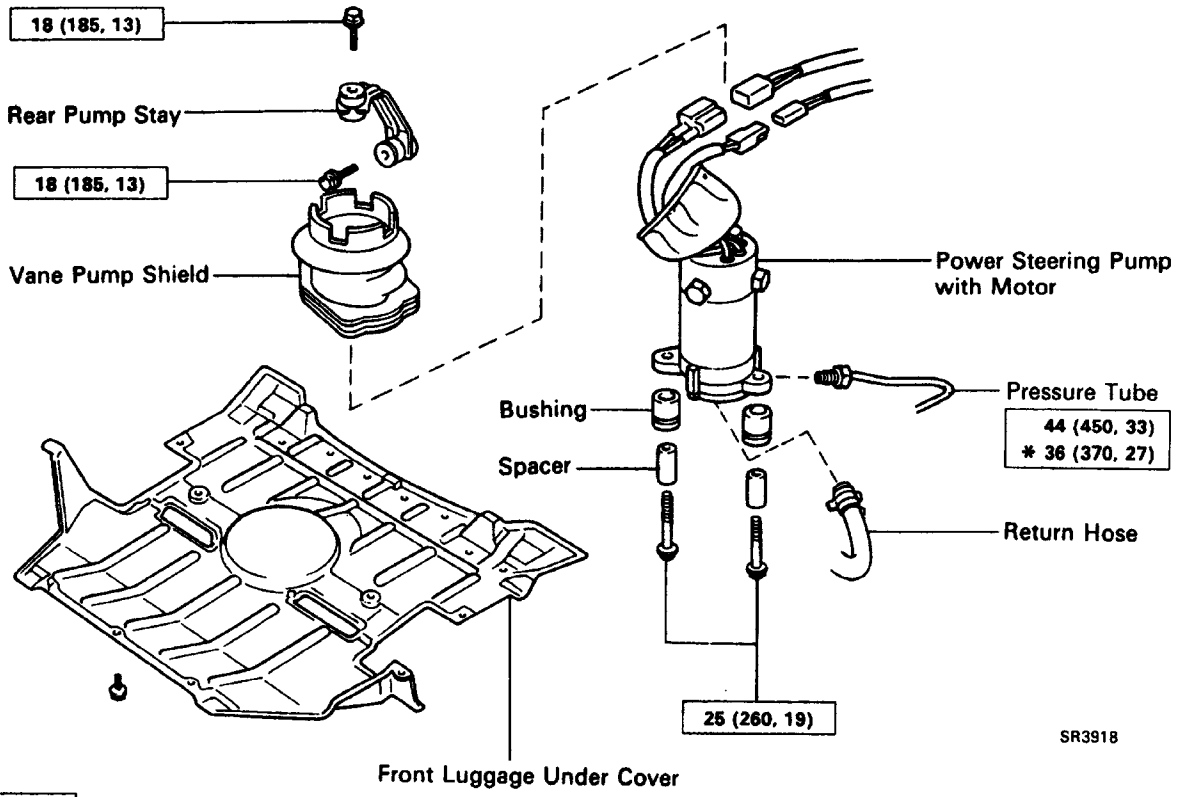

N·m (kgf·cm, ft·lbf) : Specified torque
* For use with SST

(MAIN POINTS OF REMOVAL AND INSTALLATION)

NOTICE: When supplementing the power steering fluid, use TOYOTA POWER STEERING FLUID EH or equivalent which is exclusively for EHPS use.

HINT: The power steering pump is not to be disasse–mbled, so if a malfunction occurs, replace it as an assembly.

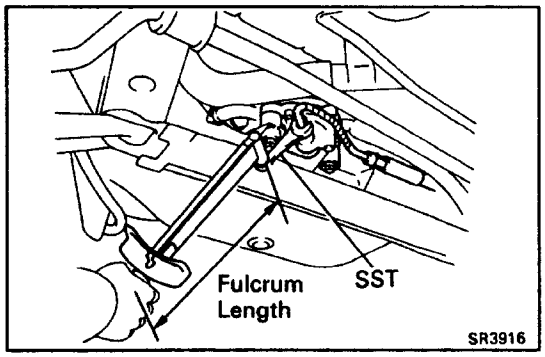

1. DISCONNECT AND CONNECT PRESSURE LINE

Using SST, disconnect and connect the pressure line.
SST 09631– 22020

Torque: 36 N–m (370 kgf–cm, 27 ft–lbf)

HINT: When connecting, use a torque wrench with a fulcrum length of 300 mm (111.81 in.).

2. BLEED POWER STEERING SYSTEM

(See page SR–9)

SR077-01

POWER STEERING MOTOR BRUSHES REPLACEMENT

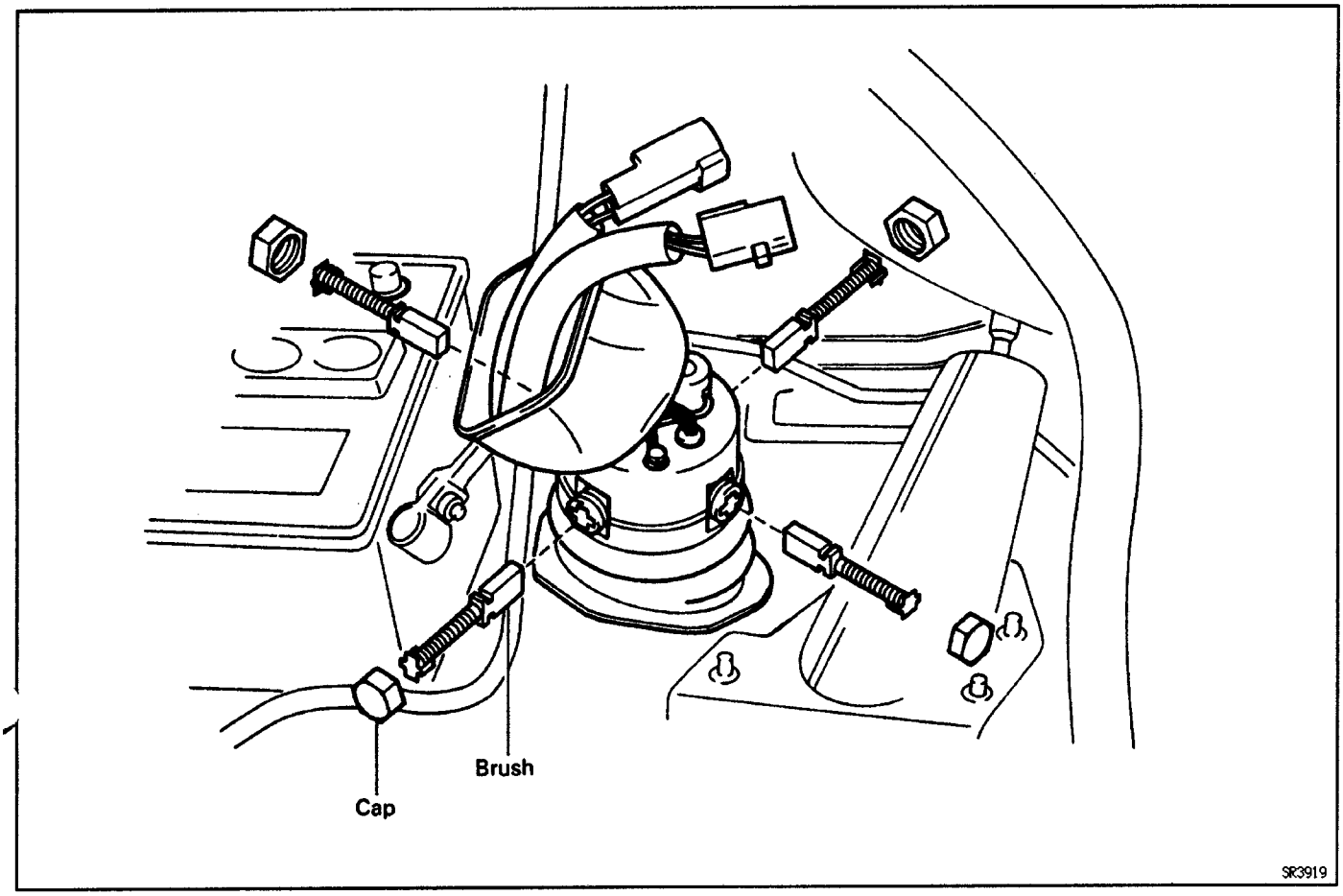

(a) Remove the four caps and brushes.
(b) install four new brushes.

HINT: Replace all four brushes at the same time.

(c) Install the four caps.

PREPARATION

SST (SPECIAL SERVICE TOOLS)

SR07J–01

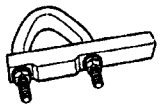	09612–00012 Rack & Pinion Steering Rack Housing Stand	
	09612–10131 Hexagon Wrench	
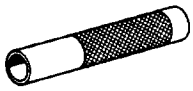	09612–22011 Tilt Handle Bearing Replacer	
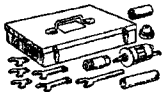	09612–24014 Steering Gear Housing Overhaul Tool Set	
	(09617–22030) Steering Rack End Wrench	
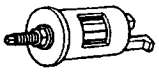	(09613–22011) Steering Rack Shaft Bushing Puller	
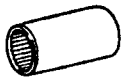	09616–00010 Steering Worm Bearing Adjusting Socket	
	09617–10020 Steering Rack End Wrench	
	09620–30010 Steering Gear Box Replacer Set	
	(09631–00020) Handle	
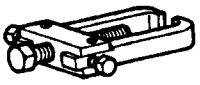	09628–62011 Ball Joint Puller	
	09630–24013 Steering Rack Oil Seal Tool Set	
	(09620–24010) Valve Cup Oil Seal Remover	

	(09620–24020) Valve Cup Oil Seal Replacer	
	(09620–24030) Valve Cup Bearing Replacer	
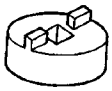	09631–10021 Rack Stopper Wrench	
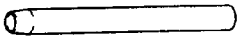	09631–10040 Steering Rack Cover ”D”	
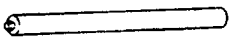	09631–12020 Handle	
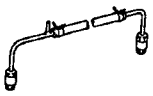	09631–12071 Steering Rack Oil Seal Test Tool	
	09631–20031 Oil Seal ”B” Remover	
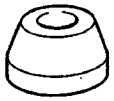	09631–20070 Seal Ring Guide	
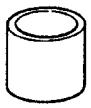	09631–20081 Seal Ring Tool	
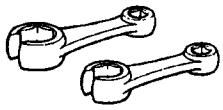	09631–22020 Power Steering Hose Nut 14 x 17 mm Wrench Set	
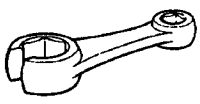	09633–00020 Power Steering Hose Nut Wrench	
	09843–18020 Diagnosis Check Wire	

SR07K–01

RECOMMENDED TOOLS

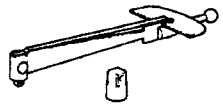	09025–00010 Small Torque Wrench	Total preload
	09904–00010 Expander set	
	(09904–00050) No. 4 Claw	

SR07L–01

EQUIPMENT

Dial indicator	Steering rack
Micrometer	Power steering pump
Oil pressure gauge	
Torque wrench	
Vacuum gauge	Gear housing

SR07M–01

LUBRICANT

Item	Capacity	Classification
Power steering fluid Total	0.8 1 liters (0.86 US qts, 0.71 lmp.qts)	ATF DEXRON® II

SR07N–01

SSM (SPECIAL SERVICE MATERIALS)

08833–00080	Adhesive 1344, THREE BOND 1344, LOCTITE 242 or equivalent	Rack housing cap Rack guide spring cap Rack guide spring cap lock nut

SERVICE SPECIFICATIONS

SR06W–01

SERVICE DATA

Steering wheel freeplay (Maximum)	30 mm (1.18 in.)
Pawl stopper (Mark)	
1 or A	12.65 – 12.75 mm 0.4980 – 0.5020 in.
2 or6	12.55 – 12.65 mm 0.4941 – 0.4980 in.
3orC	12.45 – 12.55 mm 0.4902 – 0.4941 in.
4orD	12.35 – 12.45 mm 0.4862 – 0.4902 in.
5 or E	12.25 – 12.35 mm 0.4823 – 0.4862 in.
MANUAL STEERING GEAR HOUSING	
Steering rack runout (Maximum)	0.3 mm (0.012 in.)
Pinion preload (Turning)	0.2 – 0.3 N·m (2.3 – 3.3 kgf·cm, 2.0 – 2.9 in.·lbf)
Total preload (Turning)	0.6 – 1.2 N·m (6 – 12 kgf·cm, 5.2 – 10.4 in.·lbf)
PS ON – VEHICLE INSPECTION	
Maximum rise of oil level	5 mm (0.20 in.)
Maximum rise of oil level	5 mm (0.20 in.)
Oil pressure at idle speed with valve closed (Minimum)	4.903 – 5.394 kPa (50 – 55 kgf/cm², 711 – 782 psi)
Steering effort at idle speed (Maximum),	44 N (4.5 kgf, 9.9 lbf)
PS GEAR HOUSING	
Steering rack runout (Maximum)	0.3 mm (0.012 in.)
Control valve shaft bushing oil clearance (STD)	0.050 – 0.083 mm (0.0020 – 0.0033 in.)
Control valve shaft bushing oil clearance (Maximum)	0.125 mm (0.0049 in.)
Total preload (Turning)	0.9 – 1.5 N·m (9 – 15 kgf·cm, 7.8 – 13.0 in.·lbf)

SR06X–01

TORQUE SPECIFICATIONS

Part tightened	N–m	kgf–cm	ft–lbf
STEERING COLUMN			
Main shaft x Steering wheel	35	360	26
Steering wheel pad	7.4	75	65 in.·lbf
Column tube x Body	25	260	19
Universal joint bolt	35	360	26
Tilt lever assembly installation bolt	2.9	30	26 in.·lbf
Tilt pawl set nut	5.9	60	52 in.·lbf
Tilt lever retainer set nut	15	150	11
Compression spring bushing bolt	7.8	80	69 in.·lbf
Main shaft x Intermediate shaft	35	360	26
MANUAL STEERING GEAR HOUSING			
Gear housing bracket x Body	43	440	32
Tie rod end x Steering knuckle	49	500	36
Universal joint bolt	35	360	26
Pinion bearing adjusting screw lock nut	91	930	67
Rack guide spring cap lock nut	56	570	41

Rack x Rack end	64	650	47
Tie rod end lock nut	56	570	41
POWER STEERING PUMP			
PS pump x Crossmember	25	260	19
Rear pump stay x PS pump	18	185	13
Rear pump stay x Body	18	185	13
Pressure tube union nut	36	370	27
POWER STEERING GEAR HOUSING			
Gear housing bracket x Body	43	440	32
Tie rod end x Steering knuckle	49	500	36
Universal joint bolt	35	360	26
Pressure tube union bolt	49	500	36
Return tube	25	250	18

ASSEMBLY REMOVAL AND INSTALLATION

SR06Y–01

Remove and install the parts as shown.

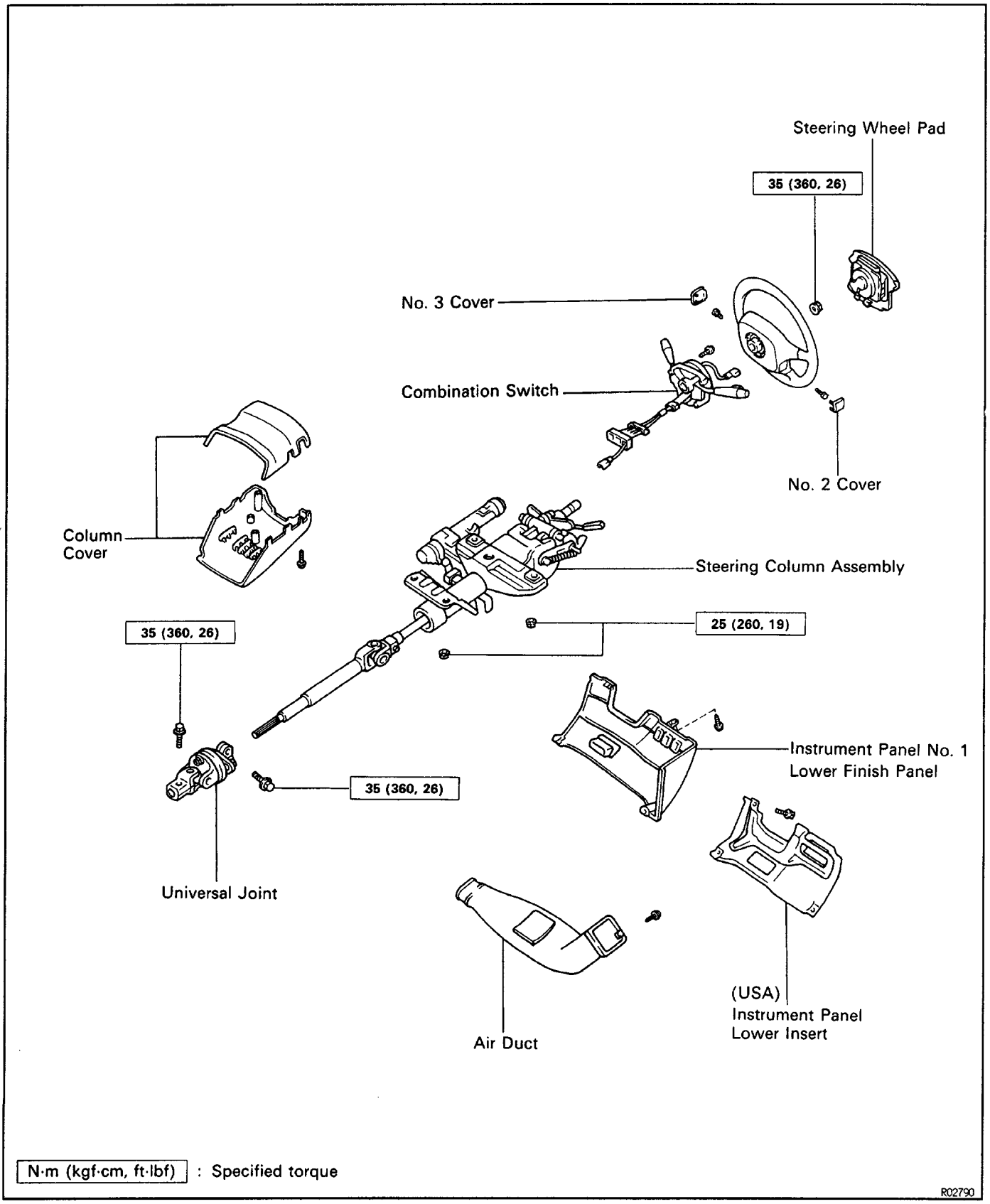

(MAIN POINTS OF REMOVAL AND INSTALLATION)

CAUTION: Work must be started after approx. 30 sec–onds or longer from the time the ignition switch is turned to the LOCK position and the negative (–) terminal cable is disconnected from the battery (See page AB–2).

NOTICE: If the wiring connector of the airbag system is disconnected with the ignition switch at ON or ACC, diagnostic codes will be recorded.

1. REMOVE STEERING WHEEL PAD

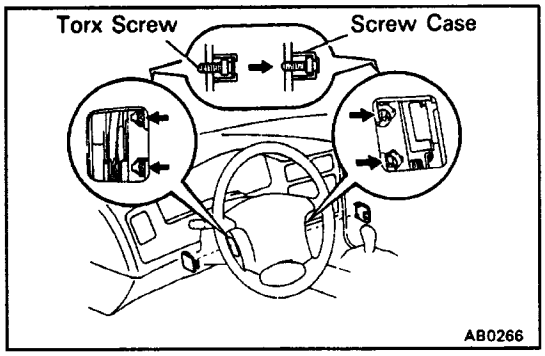

(a) Remove negative terminal (–) from the battery.

(b) Place the front wheels facing straight ahead.

(c) Using a torx wrench, loosen the four screws.

Torx wrench: T30 (Part No. 09042–00010 or locally manufactured tool)

(d) Loosen the torx screws until the groove along the screw circumference catches on the screw case.

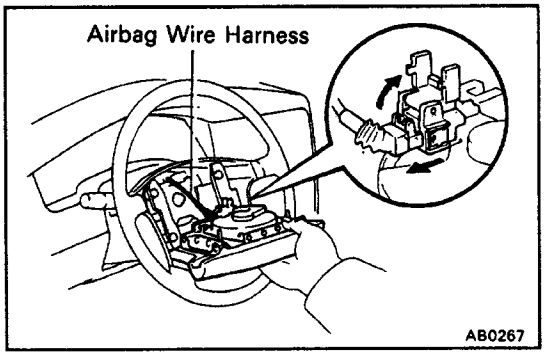

(e) Pull the wheel pad out from the steering wheel and disconnect the airbag connector.

NOTICE: When removing the wheel pad, take care not to pull the airbag wire harness.

CAUTION: When storing the wheel pad, keep the upper surface of the pad facing upward.

2. REMOVE STEERING WHEEL

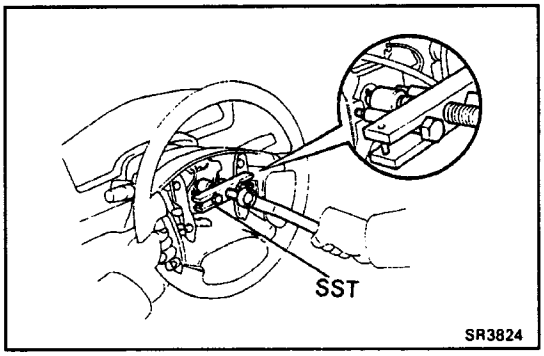

(a) Disconnect the connector.

(b) Remove the set nut.

(c) Using SST, remove the steering wheel.

SST 09213–31021

3. INSTALL STEERING WHEEL AND WHEEL PAD

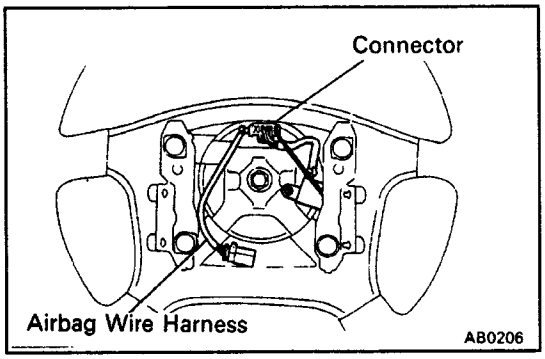

(a) Check that the front wheels are facing straight ahead.

(b) Center the spiral cable.

(See page AB–17)

(c) Install the steering wheel and torque the set nut.

Torque: 35 N–m (360 kgf–cm, 26 ft–lbf)

(d) Connect the connector.

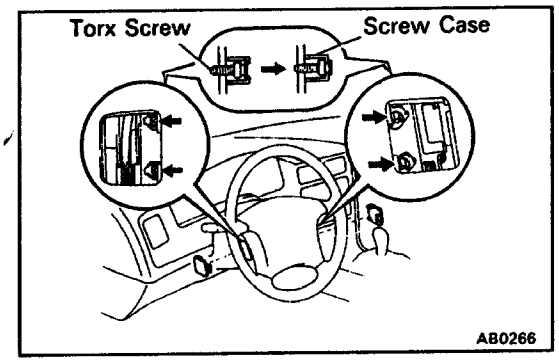

(e) Install the wheel pad after confirming that the cir–cumference groove of the torx screws is caught on the screw case.

(f) Using a torx wrench, tighten the four screws.

Torque: 7.4 N–m (7.5 kgf–cm, 65 in.–lbf)

NOTICE:

- **Make sure the wheel pad is installed to the specified torque.**
- **If the wheel pad has been dropped, or there are cracks, dents or other defects in the case or con–nector, replace the wheel pad with a new one.**
- **When installing the wheel pad, take care that the wirings do not interfere with other parts and are not pinched between other parts.**

4. CHECK STEERING WHEEL CENTER POINT AFTER INSTALLING STEERING COLUMN

SR06Z–01

COMPONENTS

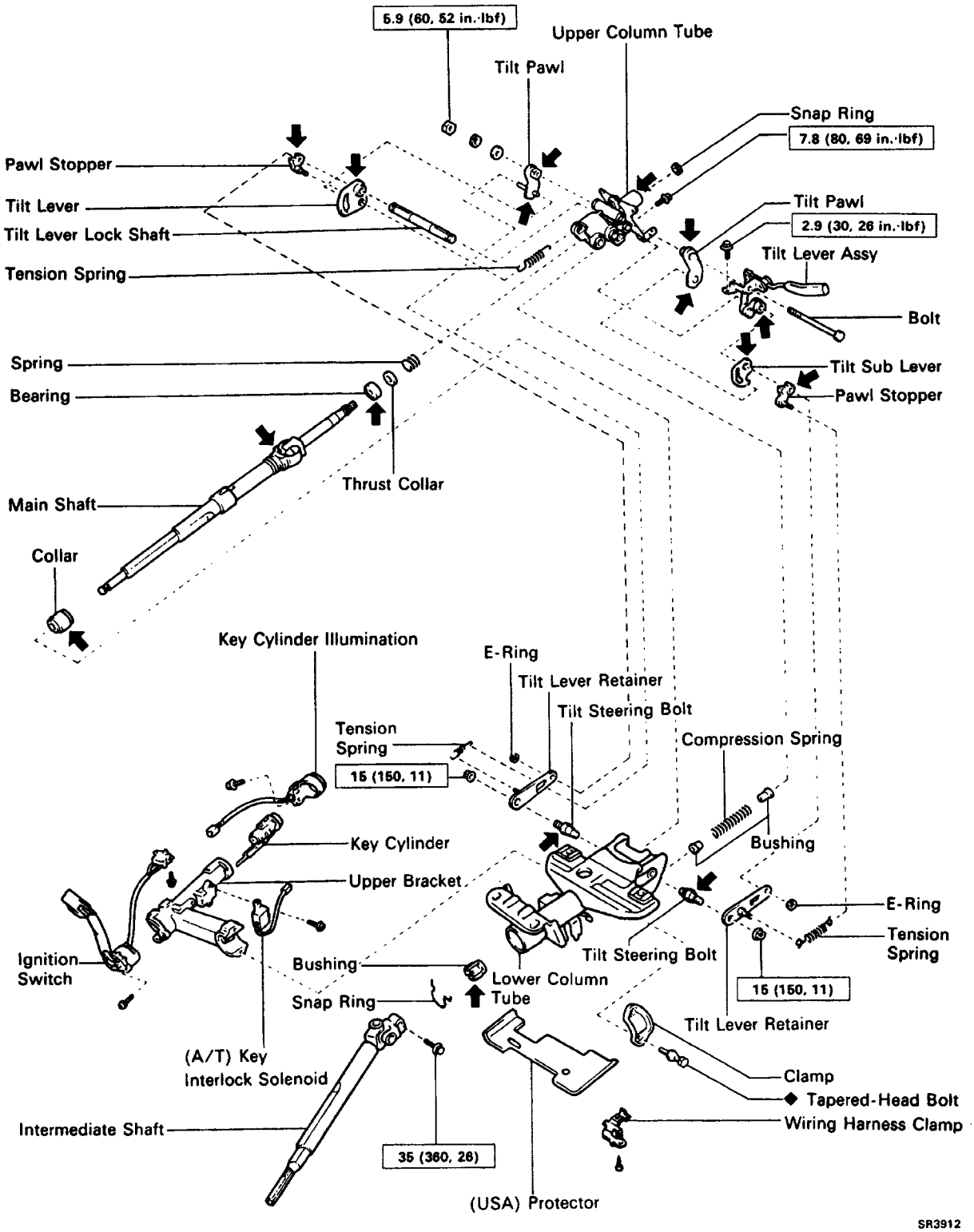

N·m (kgf·cm, ft·lbf) : Specified torque

◆ Non-reusable part

⬅ : Apply Molybdenum Disulphide Lithium Base Grease

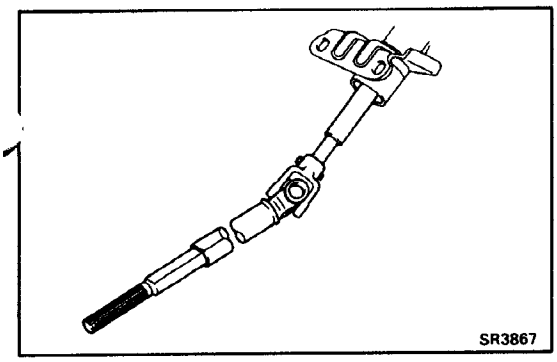

STEERING COLUMN DISASSEMBLY

SR070–01

1. REMOVE IGNITION KEY CYLINDER ILLUMINATION

2. REMOVE INTERMEDIATE SHAFT

3. REMOVE WIRING HARNESS CLAMP

4. (USA)

REMOVE PROTECTOR

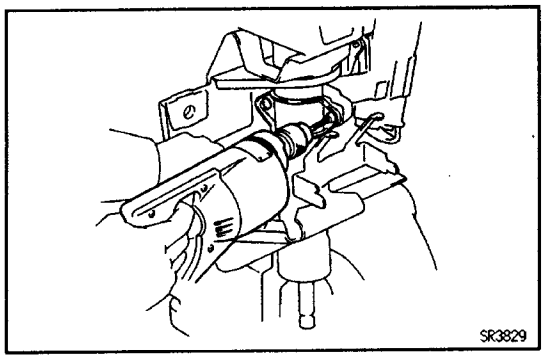

5. REMOVE UPPER BRACKET

(a) Using a centering punch, mark the center of the tapered–head bolts.

(b) Using a 3–4 mm (0.12–0.16 in.) drill, drill into the tapered–head bolts.

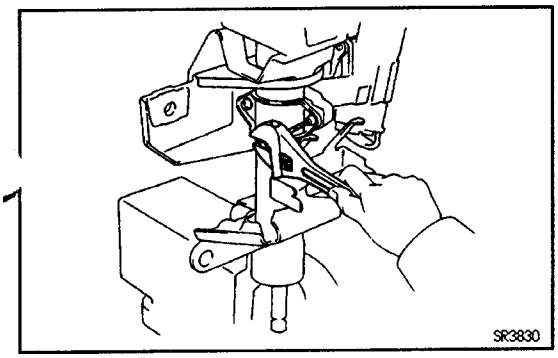

(c) Using a screw extractor, remove the tapered–head bolts.

(d) Remove the two bolts, and separate the upper bracket and the column tube.

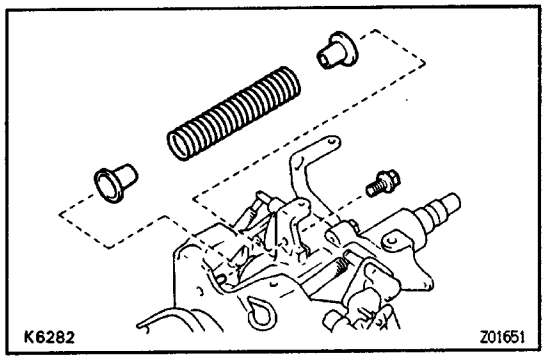

6. REMOVE COMPRESSION SPRING

(a) Remove the bolt and spring.

(b) Remove the two bushings from the spring.

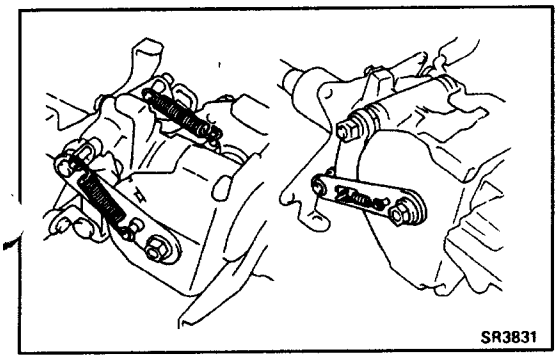

7. REMOVE THREE TENSION SPRINGS

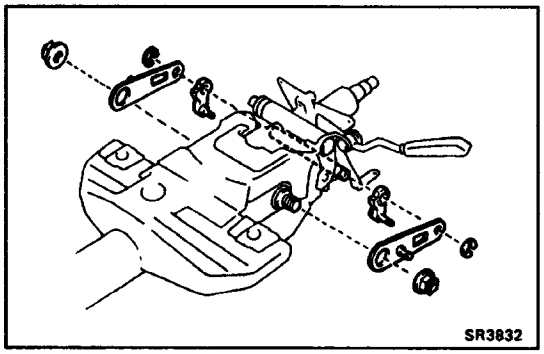

8. REMOVE TILT LEVER RETAINERS AND PAWL STOPPERS

(a) Remove the two E– rings from the tilt lever lock shaft.
(b) Remove the two nuts from the tilt steering bolts.
(c) Remove the two tilt lever retainers and two pawl stoppers.

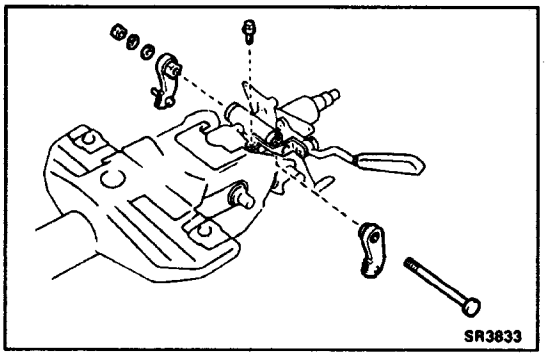

8. REMOVE TILT PAWLS

(a) Remove the nut and two washers.
(b) Pull out the bolt.
(c) Remove the tilt lever assembly installation bolt.
(d) Remove the two tilt pawls.

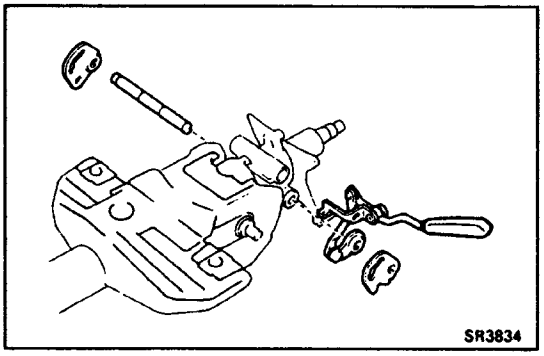

10. REMOVE TILT LEVER, TILT SUB LEVER, TILT LEVER ASSEMBLY AND TILT LEVER LOCK SHAFT

(a) Remove the tilt lever, tilt sub lever and tilt lever assembly from the tilt lever lock shaft.
(b) Pull out the tilt lever lock shaft.

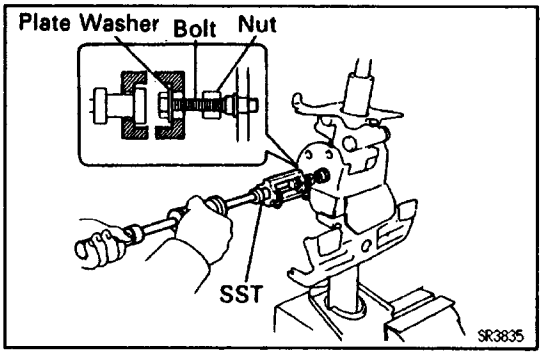

11. REMOVE UPPER COLUMN TUBE

(a) Set SST, the nut (10 mm diameter, 1.25 mm pitch), plate washer (36 mm outer diameter) and bolt (10 mm diameter, 1.25 mm pitch, 50 mm length) as shown. And then remove the two tilt steering bolts.
SST 09910–00015(09911–0001 1,09912–00010)
(Reference) Nut 90170–10004
Plate washer 90201–10201
Bolt 91111–51050

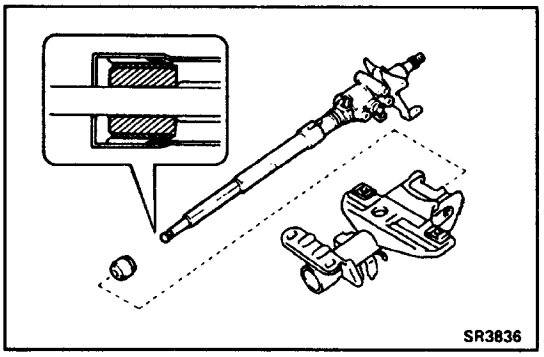

(b) Remove the upper column tube from the lower column tube.
(c) Remove the collar from the main shaft.

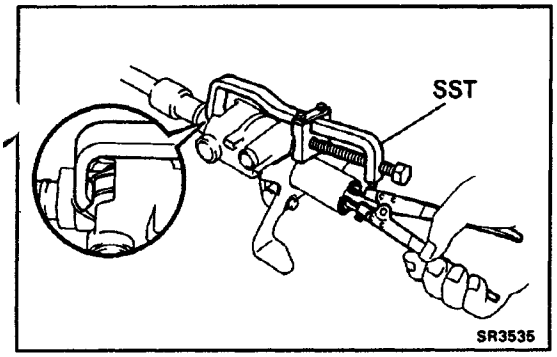

12. REMOVE MAIN SHAFT

(a) Using SST to compress the main shaft spring, remove the snap ring with snap ring pliers.
SST 09950–20017(09956–00010)

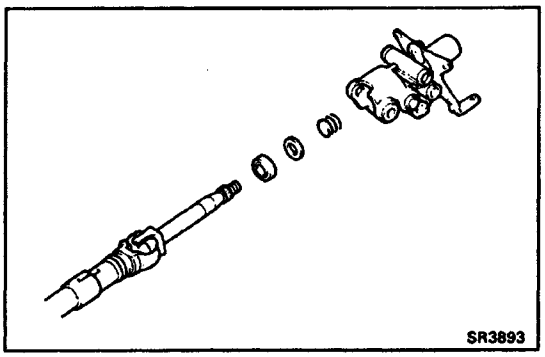

(b) Remove the main shaft from the column tube.
(c) Remove the spring, thrust collar and bearing.

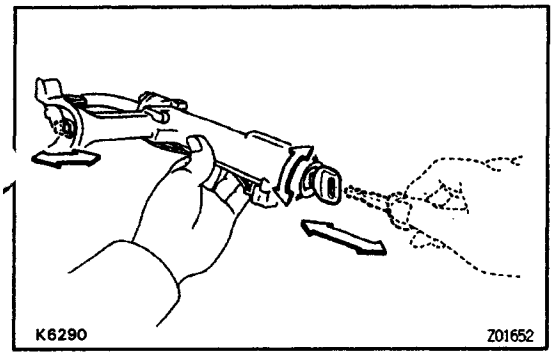

STEERING COLUMN INSPECTION AND REPLACEMENT

SR071–01

1. INSPECT KEY CYLINDER

Check that the steering lock mechanism operates properly.

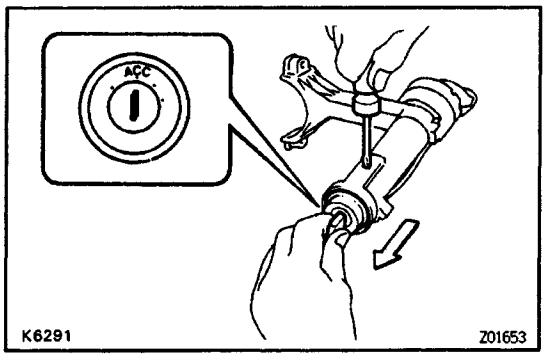

2. IF NECESSARY, REPLACE KEY CYLINDER

(a) Place the ignition key at the ACC position.
(b) Push down the stop pin with a thin rod, and pull out the key cylinder.
(c) Make sure the ignition key is at the ACC position.
(d) Install a new key cylinder.

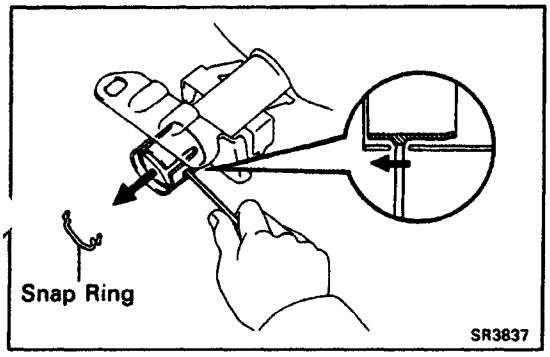

3. IF NECESSARY, REPLACE MAIN SHAFT BUSHING

(a) Remove the snap ring.
(b) Using a screwdriver, remove the bushing.

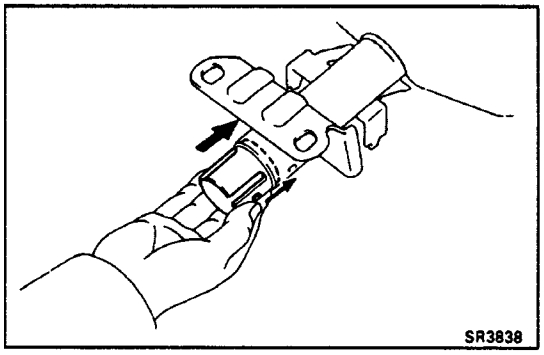

(c) Align the holes of the tube and projections of a new bushing, and install the bushing in the column tube.
(d) Install the snap ring.

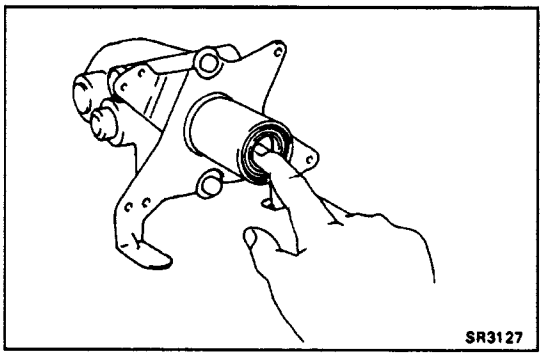

4. INSPECT UPPER BEARING
Check the upper bearing rotation condition and check for abnormal noise.
5. (A/T)
INSPECT KEY INTERLOCK SOLENOID
(See page AT–80)

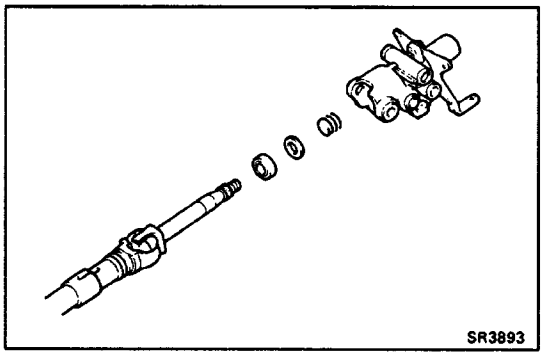

STEERING COLUMN ASSEMBLY

SR072–01

1. APPLY MOLYBDENUM DISULPHIDE LITHIUM BASE GREASE
2. INSTALL MAIN SHAFT
(a) Install the bearing, thrust collar and spring to the main shaft.
(b) Install the main shaft into the upper column tube.

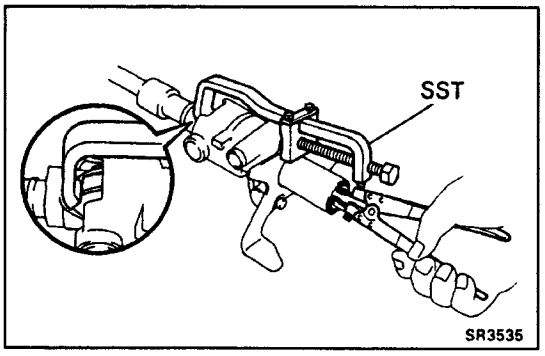

(c) Using SST to compress the main shaft spring, install the snap ring with snap ring pliers.
SST 09950–20017

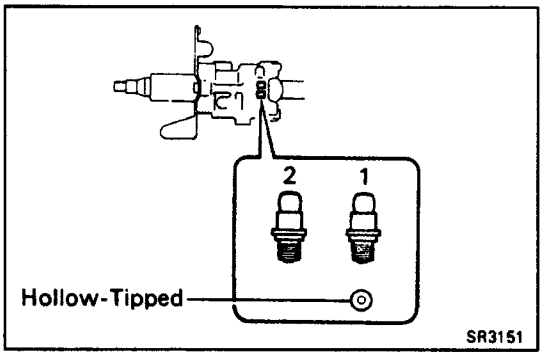

3. SELECT TILT STEERING BOLTS
Select the bolt with the plain thread end when the upper column tube mark is 2, and the bolt with the hollow–tipped thread end when the mark is 1.

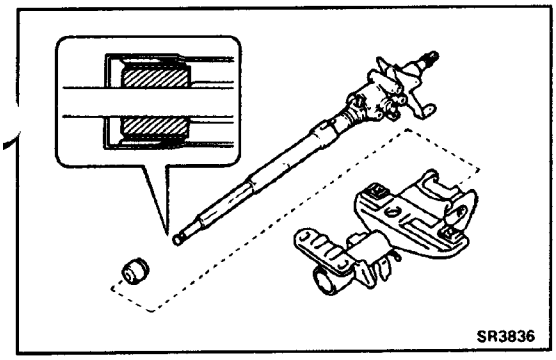

4. INSTALL MAIN SHAFT WITH UPPER COLUMN TUBE

(a) Install the collar to the main shaft.

(b) Install the main shaft with the upper column tube into the lower column tube.

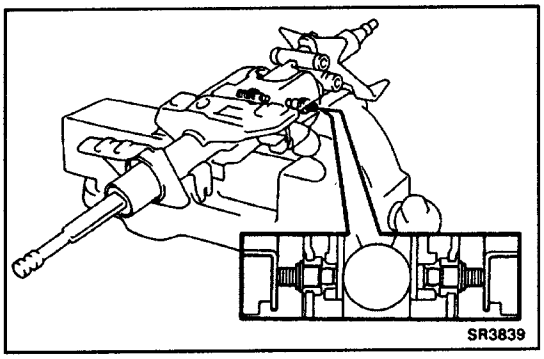

(c) Using a vise, press in the two tilt steering bolts.

HINT: Make sure the upper tube turns smoothly.

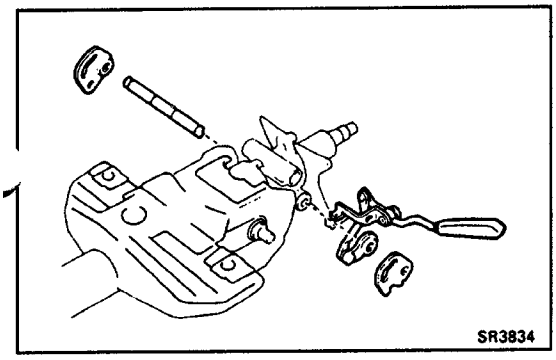

5. INSTALL TILT LEVER LOCK SHAFT, TILT LEVER ASSEMBLY, TILT SUB LEVER AND TILT LEVER

(a) Install the tilt lever lock shaft into the upper column tube.

(b) Install the tilt lever assembly.

(c) Install the tilt lever and tilt sub lever.

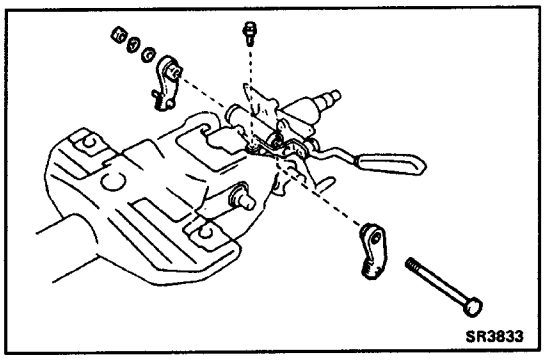

6. INSTALL TILT PAWLS

(a) Install the two tilt pawls to the upper column tube.

HINT: Install the pawl pin into the long hole of the tilt lever and tilt sub lever.

(b) Install the bolt through the tilt pawls and tilt lever assembly.

(c) Temporarily install the two washers and nut.

(d) Install and torque the tilt lever assembly installation bolt.

Torque: 2.9 N–m (30 kgf–cm, 26 in.–lbf)

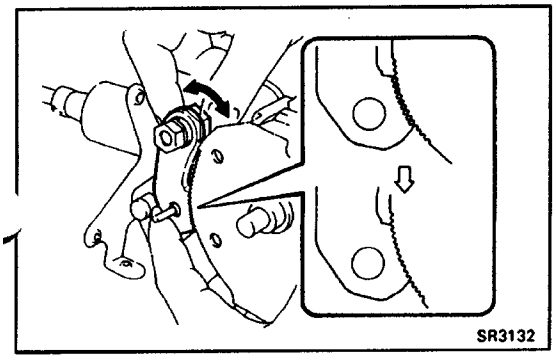

7. ENGAGE AND ADJUST TILT PAWL

(a) Engage the tilt sub lever side pawl to the center of the ratchet.

(b) While turning the tilt lever side collar, completely engage the tilt lever side pawl to the ratchet.

(c) Tighten the nut.

Torque: 5.9 N–m (60 kgf–cm, 52 in.–lbf)

(d) Check that the pawls rotate smoothly.

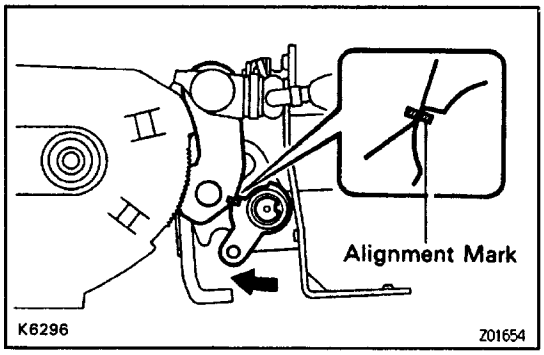

8. SELECT PAWL STOPPERS

(a) With the tilt pawl and ratchet engaged, install two pawl stoppers.

(b) Check that the alignment marks on the stopper and pawl align when the stopper is rotated to the pawl side.

(c) If the alignment marks do not align, select pawl sto–ppers according to the following table.

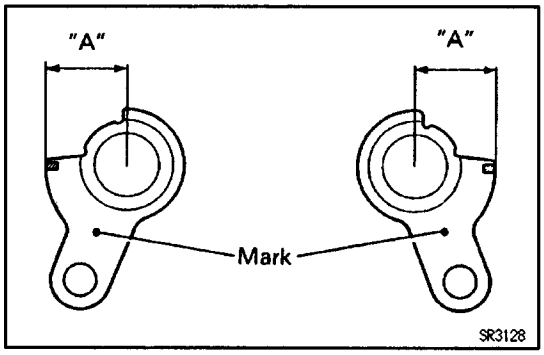

(d) After selecting the stoppers, check that on both sides the pawl and ratchet are fully engaged.

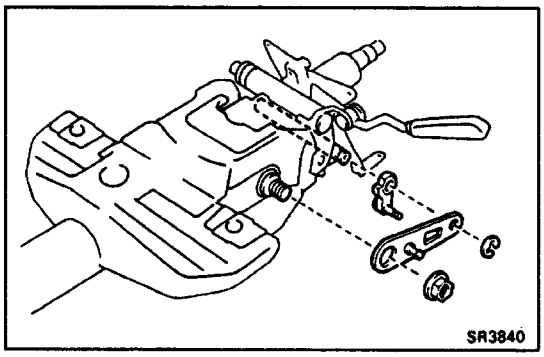

9. INSTALL PAWL STOPPERS AND TILT LEVER RE–TAINERS

(a) Install the tilt sub lever side pawl stopper and tilt lever retainer.

(b) Install the E–ring.

(c) Install and torque the nut.

Torque: 15 N–m (150 kgf–cm, 11 ft–lbf)

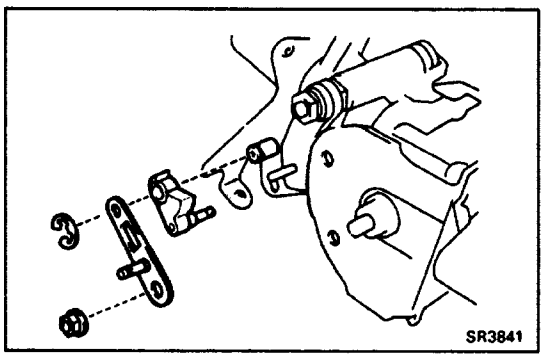

(d) Install the tilt lever side pawl stopper and tilt lever retainer.

(e) Install the E–ring.

(f) Install and torque the nut.

Torque: 15 N–m (150 kgf–cm, 11 ft–lbf)

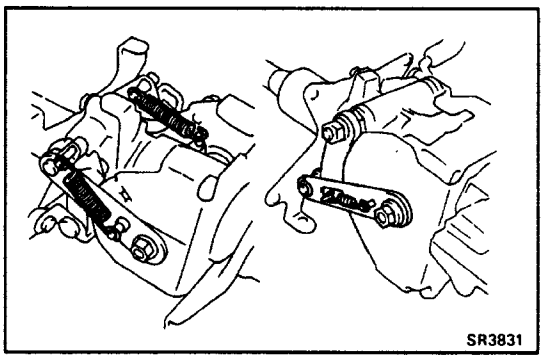

10. INSTALL THREE TENSION SPRINGS

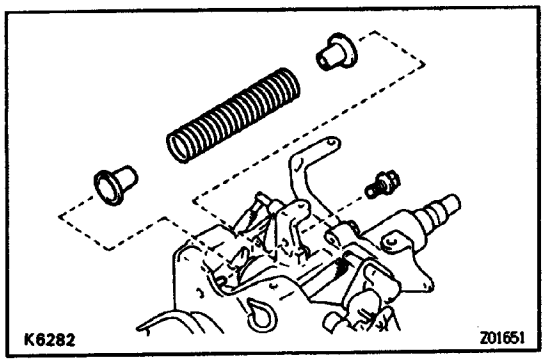

11. INSTALL COMPRESSION SPRING

(a) Install the two bushings to the spring.
(b) Install the spring and bolt.
(c) Torque the bolt.
Torque: 7.8 N–m (80 kgf–cm, 69 in.–lbf)

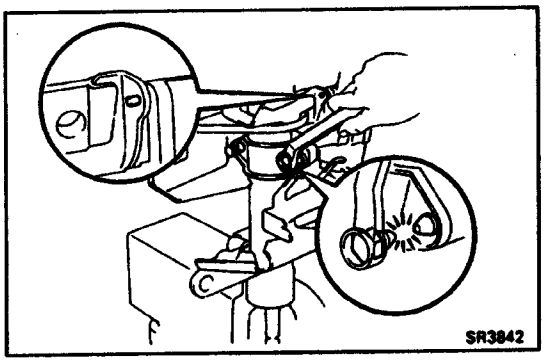

12. INSTALL UPPER BRACKET

(a) Install the upper bracket with new tapered – head bolts.

HINT: Install the upper bracket pin into the column tube hole.

(b) Tighten the tapered–head bolts until the bolt heads brake off.

13. (USA)
INSTALL PROTECTOR

14. INSTALL WIRING HARNESS CLAMP

15. INSTALL INTERMEDIATE SHAFT
Torque: 35 N–m (360 kgf–cm, 26 ft–lbf)

16. INSTALL IGNITION KEY CYLINDER ILLUMINATION

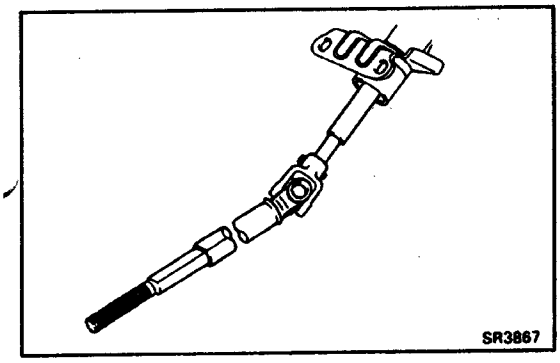

17. CHECK OPERATION OF TILT STEERING

(a) Check that there is no axial play at the end of the main shaft.
(b) With the main shaft in the neutral position, push the tilt lever and check that the main shaft rises to the uppermost position.
(c) Lower the main shaft, and check that it locks in the uppermost position.

STEERING COLUMN

PREPARATION

SST (SPECIAL SERVICE TOOLS)

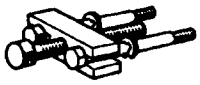	09609–20011 Steering Wheel Puller	
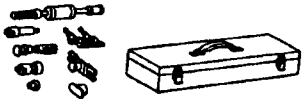	09910–00015 Puller Set	
	(09911–00011) Puller Clamp	
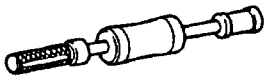	(09912–00010) Puller Slide Hammer	
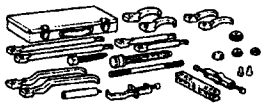	09950–20017 Universal Puller	
	(09956–00010) Tightening Piece	

SR074–01

RECOMMENDED TOOLS

	09904–00010 Expander Set	For removing and installing snap ring
	(09904–00050) No. 4 Claw	

SR075–01

EQUIPMENT

Torque wrench	

GENERAL DESCRIPTION

11I011-01

- Care must be taken to replace parts properly because they could affect the performance of the steering system and result in a driving hazard.
- The steering wheel pad has an airbag built in, so take all due precautions when handling it. For more details, see the SRS AIRBAG section.

TROUBLESHOOTING

You will find the cause of trouble more easily by properly using the table shown below. In this table, the numbers indicate the priority of the probable cause of trouble. Check each part in the order shown. If necessary, repair or replace the part.

See page / Parts Name / Trouble	Tires (Improperly inflated) SA–3	Front wheel alignment (Incorrect) SA–4	Fluid level (Low) SA–40	Drive belt (Loose)	Steering system joints (Worn) –	Suspension arm ball joints (Worn) SA–27	Steering column (Binding) –	Sliding yoke (Worn) –	Steering gear housing	Front wheel bearing (Worn) SA–10
Hand steering	1	4	2	3	5	6	7		8	
Poor return	1	2					3		4	
Excessive play					1	2		3	5	4
Abnormal noise			1		2				3	

V00014

FRONT AXLE

DESCRIPTION

The wheel bearings are double–row angular ball bearings combined with the oil seals having small rolling resistance and are free from maintenance.
There is no need for bearing grease maintenance or preload adjustment.

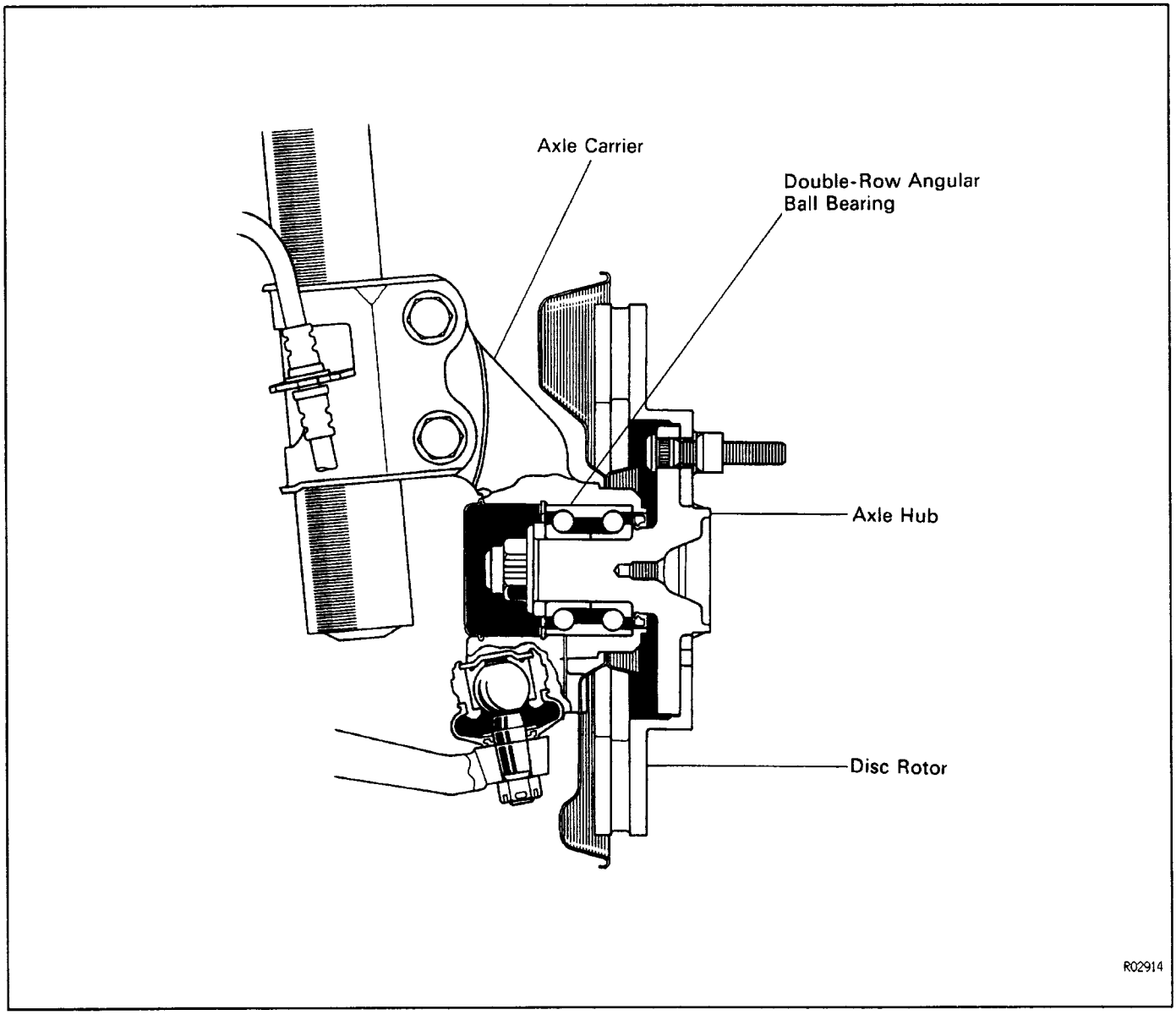

FRONT AXLE HUB

SA0AY – 01

COMPONENTS

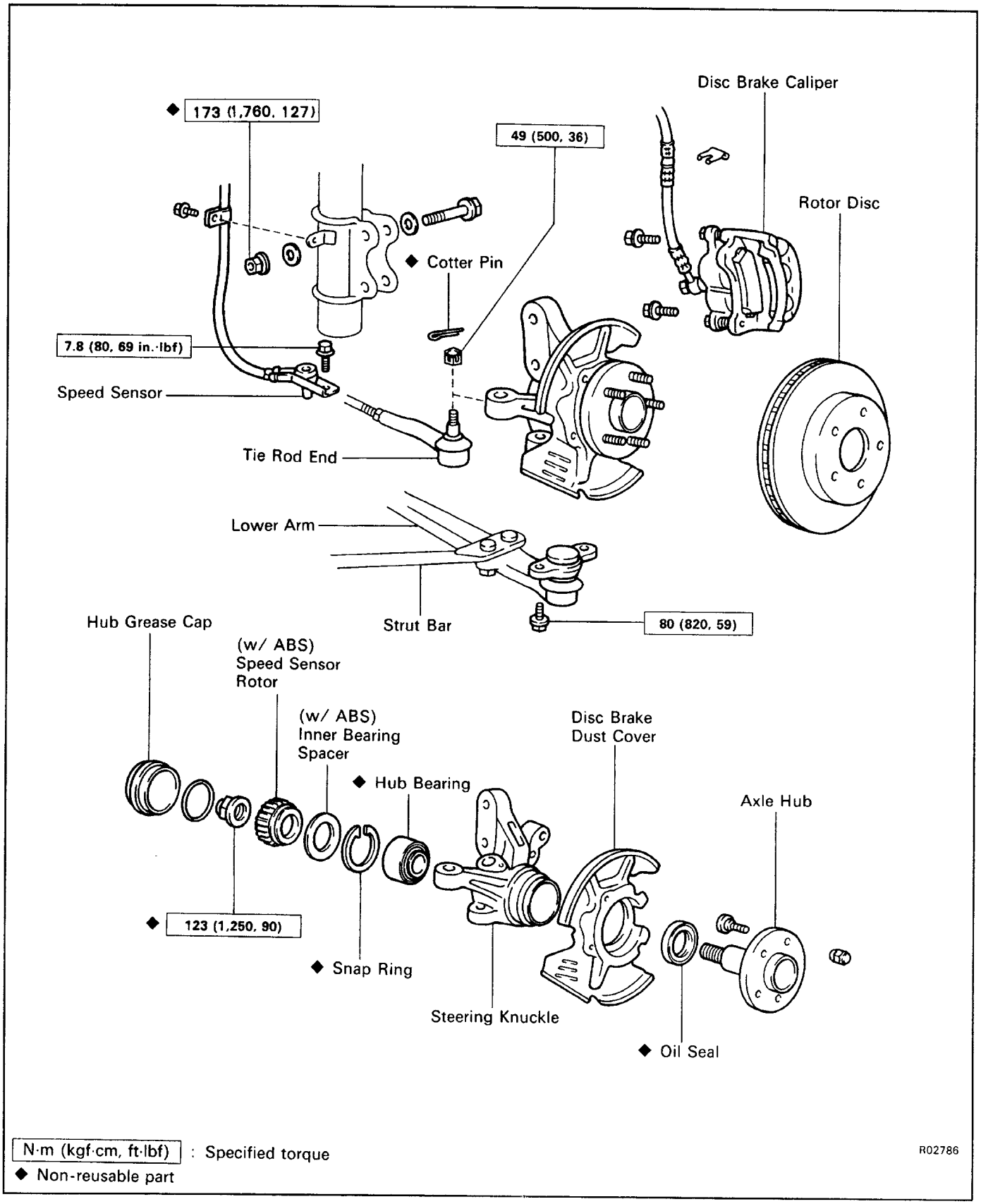

N·m (kgf·cm, ft·lbf) : Specified torque

◆ Non-reusable part

R02786

SA0AZ–01

FRONT AXLE HUB REMOVAL

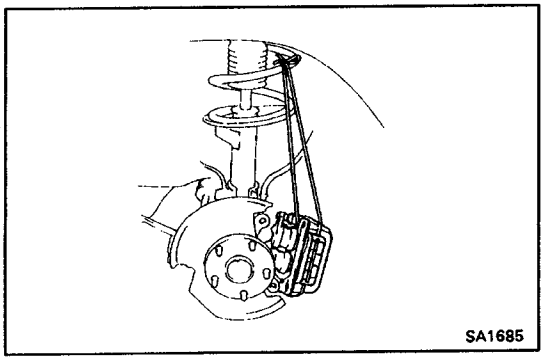

1. JACK UP VEHICLE AND REMOVE FRONT WHEEL

2. REMOVE BRAKE CALIPER AND ROTOR DISC

(a) Remove the two bolts.

(b) Remove the brake caliper from the steering knuckle and suspend it with wire.

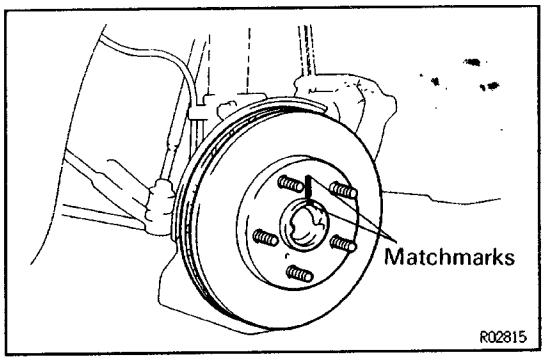

(c) Remove the rotor disc.

HINT: Before removing the rotor disc, place the mat–chmarks on–the axle hub and rotor disc.

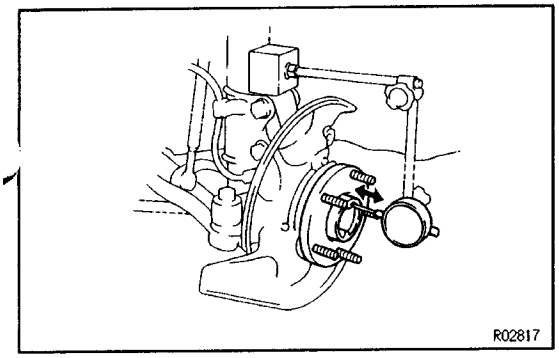

3. CHECK BEARING PLAY IN AXIAL DIRECTION

Bearing play:

0.05 mm (0.0020) or less

If the bearing play is greater than the maximum, re–place the bearing.

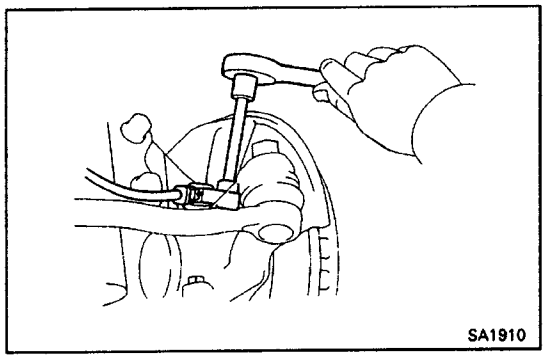

4. (W/ ABS)

REMOVE SPEED SENSOR

Remove the bolt and pull out the speed sensor.

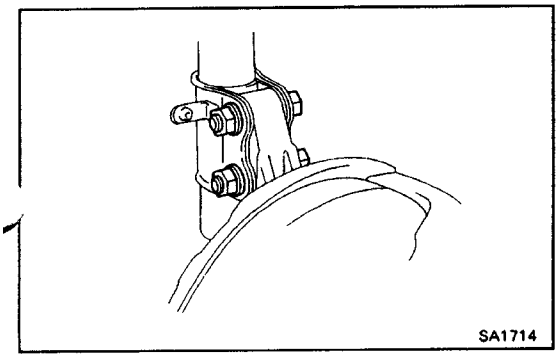

5. LOOSEN BOLTS AND NUTS OF SHOCK ABSORBER LOWER BRACKET

Loosen the nuts and bolts, and remove the washers and nuts.

HINT: Leave the bolts not to drop the steering knuckle assembly.

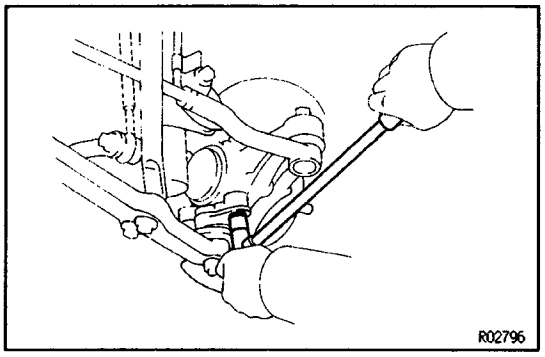

6. DISCONNECT LOWER BALL JOINT AND TIE ROD END

(a) Loosen the two ball joint set bolts.

(b) Remove the cotter pin and nut from the tie rod end.

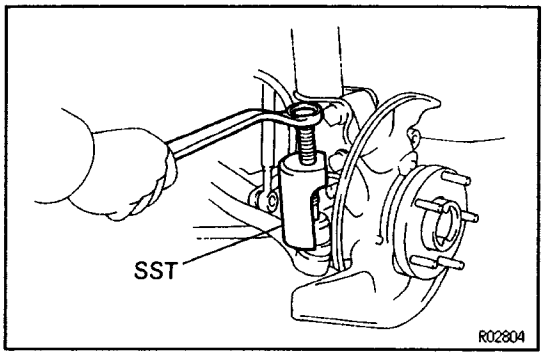

(c) Using SST, disconnect the tie rod end from the steering knuckle.
SST 09610–20012

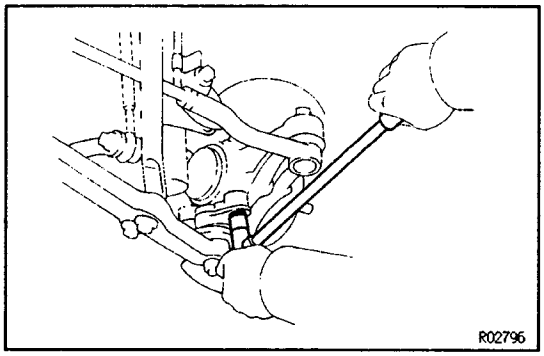

(d) Remove the two bolts and ball joint from the steering knuckle.

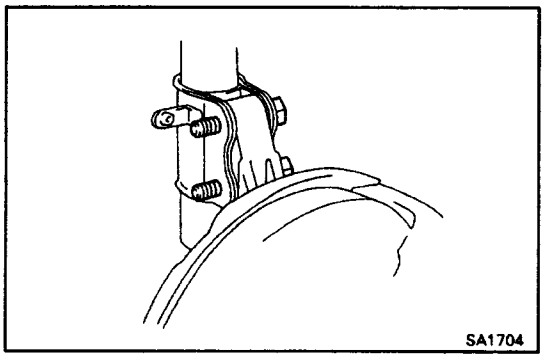

7. REMOVE STEERING KNUCKLE WITH AXLE HUB

Remove the two bolts and washer–s, and remove the steering knuckle.

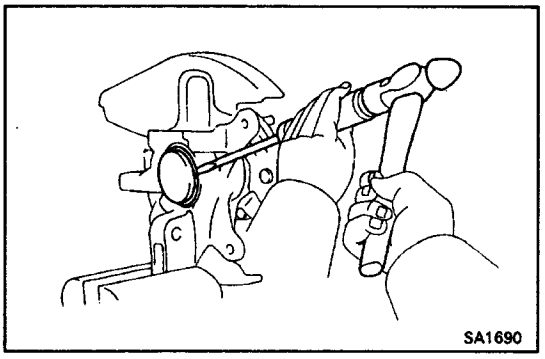

FRONT AXLE HUB DISASSEMBLY

SA080–01

1. REMOVE HUB BEARING CAP

(a) Clamp the steering knuckle in a soft jaw vice.

(b) Using a screwdriver and hammer, remove the hub bearing cap.

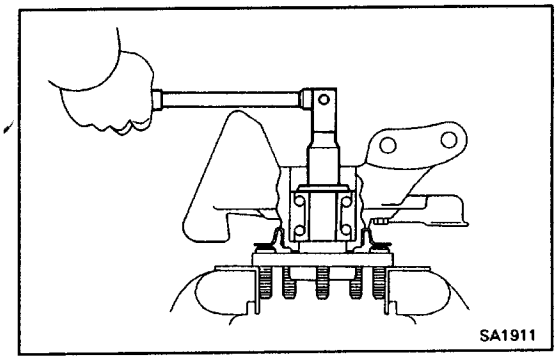

2. REMOVE FRONT AXLE HUB LOCK NUT

(a) Clamp the axle hub in soft jaw vice.

HINT: Close vice until it holds hub bolt. Do not tighten further.

(b) Using a hammer and chisel, loosen the staked part of the nut and remove the lock nut.

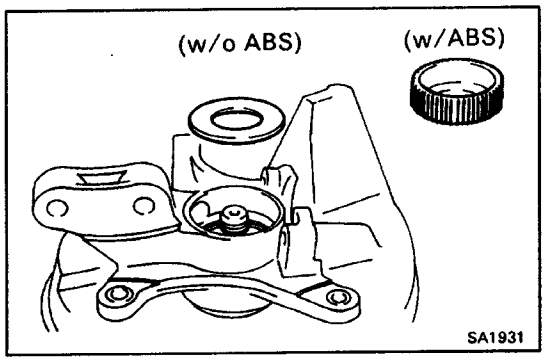

3. (w/ ABS)

REMOVE SPEED SENSOR ROTOR

NOTICE: Take care to not scratch the serrations of speed sensor rotor.

4. (w/o ABS)

REMOVE BEARING INNER SPACER

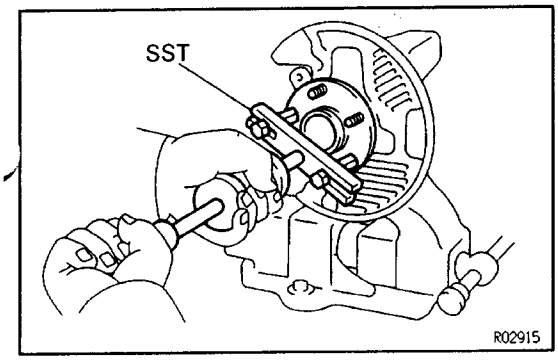

5. REMOVE AXLE HUB

Using SST, remove the axle hub from the steering knuckle.

SST 09520–00031

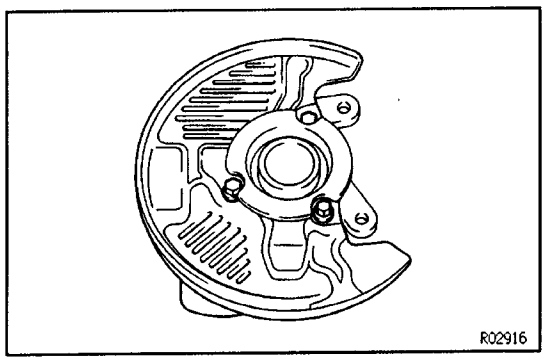

6. REMOVE DISC BRAKE DUST COVER

Using a tor–x driver, remove the four bolts and the dust cover.

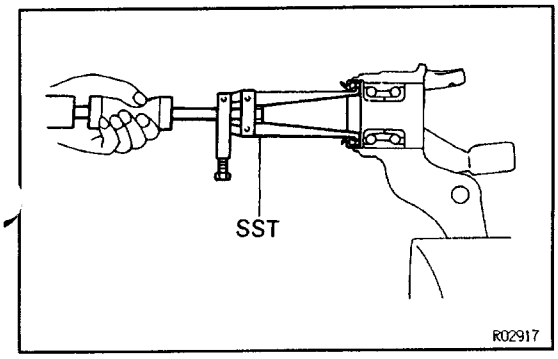

7. REMOVE OIL SEAL

(a) Clamp the steering knuckle in a soft jaw vice.

(b) Using SST, remove the oil seal from the rear axle carrier.

SST 09308–00010

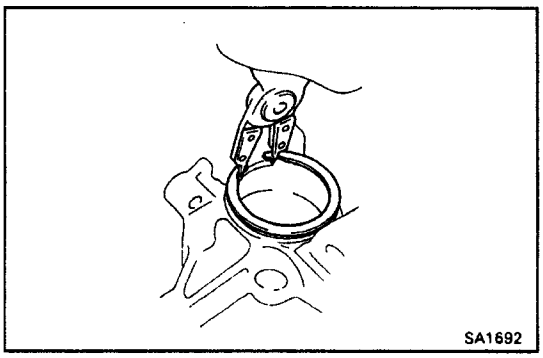

8. REMOVE HUB BEARING

(a) Using snap ring pliers, remove the hole snap ring.

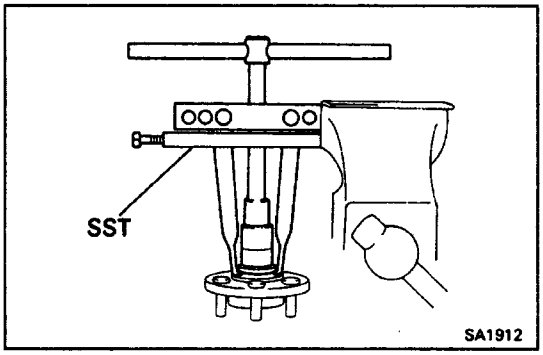

(b) Using SST, remove the hub bearing inner race (out–side) from the axle hub.
SST 09950–20017

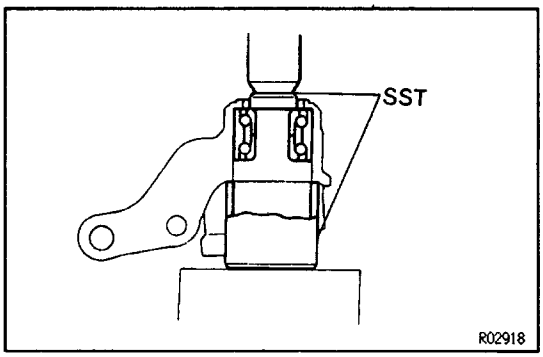

(c) First place the removed inner race (outside) in the bearing.

(d) Using SST, drive out the hub bearing from the steering knuckle.
SST 09608–30012 (09608–04060),
09649–17010

SA081–01

FRONT AXLE HUB ASSEMBLY

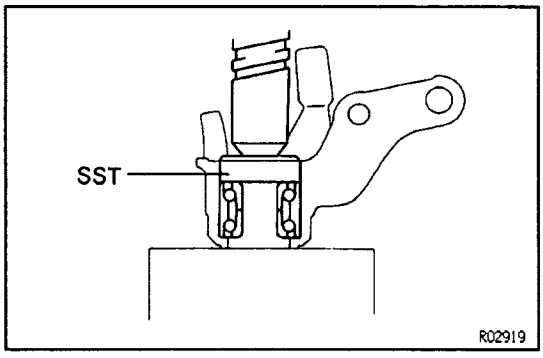

1. INSTALL HUB BEARING

(a) Using SST, install a new axle hub bearing.
SST 09608–30012 (09608–04070)

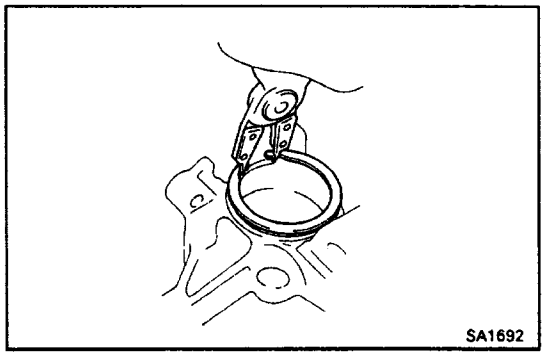

(b) Using snap ring pliers, install the hole snap ring.

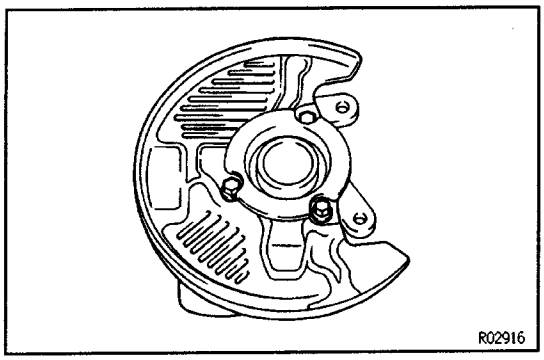

2. INSTALL DISC BRAKE DUST COVER

HINT: Apply liquid sealer or sealant the dust cover and steering knuckle connection before assemble.

(a) Install the dust cover in place.

(b) Using a torx driver, install and torque the four bolts.

Torque: 8.3 N–m (85 kgf–cm, 74 ft–lbf)

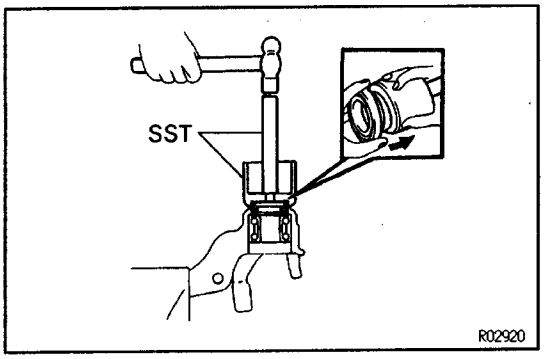

3. INSTALL OIL SEAL

(a) Rotate and insert the side lip of a new oil seal into the SST.

(b) Using SST, drive the oil seal into the steering knuckle.

SST 09608–30012 (09608–04020), 09649–17010

(c) Apply MP grease to the oil seal lip.

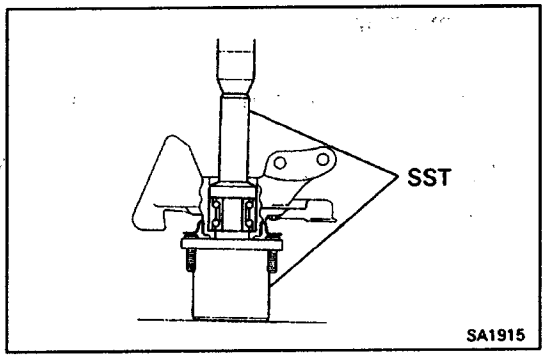

4. INSTALL AXLE HUB

(a) Coat the MP grease to the oil seal lip.

(b) Install the bearing outer and inner race into the axle bearing.

(c) Using SST, install the axle hub to the steering knuckle.

SST 09608–34012 (09608–04020)

(d) (w/ ABS)

Install the speed sensor rotor.

NOTICE: Take care to not scratch the serrations of speed sensor rotor.

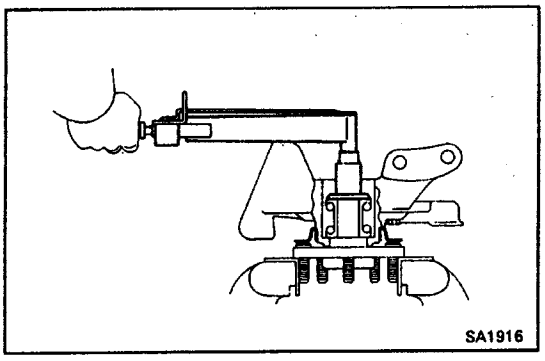

(e) (w/o ABS)

Install the bearing inner spacer.

(f) Install and torque a new axle hub lock nut.

Torque: 123 N–m (1,250 kgf–cm, 90 ft–lbf)

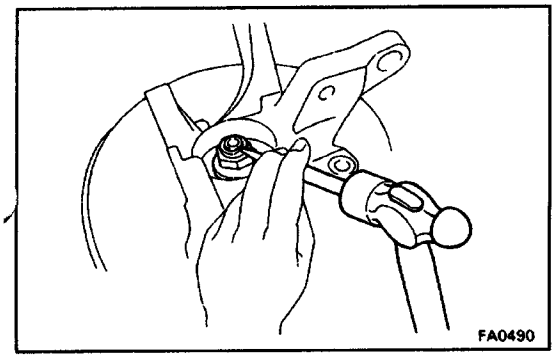

(g) Using a hammer and punch, stake the nut.

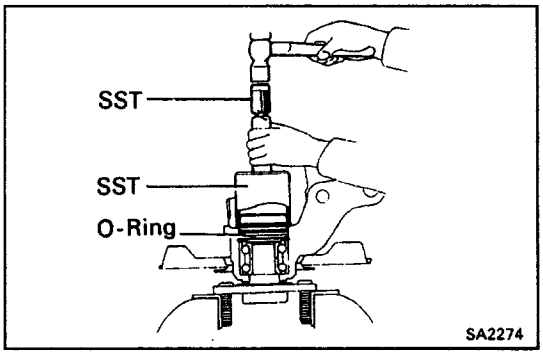

5. INSTALL HUB GREASE CAP

Using SST, install the hub grease cap.

SST 09608–30012 (09608–04020),
09649–17010

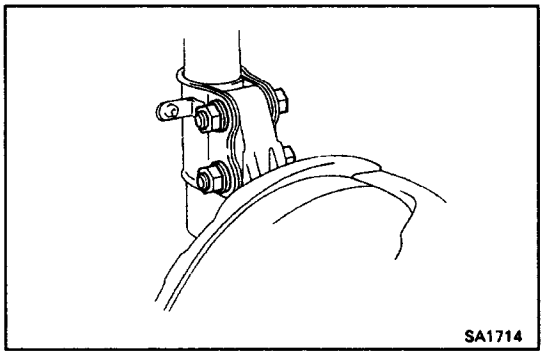

FRONT AXLE HUB INSTALLATION

SA082–01

1. INSTALL STEERING KNUCKLE TO SHOCK ABSORBER

(a) Connect the steering knuckle to the shock absorber lower bracket with the two washers and bolts.
HINT: Install the two bolts from the rear side.

(b) Temporarily install the washer and new nuts.

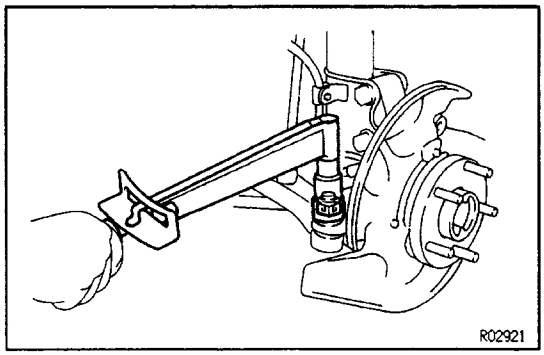

2. CONNECT TIE ROD END TO STEERING KNUCKLE

Torque the castle nut and secure it with a new cotter pin.
HINT: If the hole in the ball joint is not aligned with the grooves of the nut, tighten the nut until they match.
Torque: 49 N–m (500 kgf–cm, 36 ft–lbf)

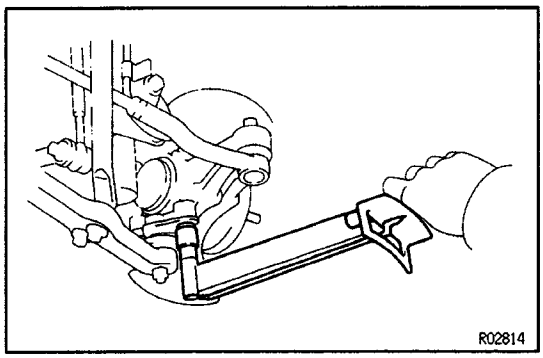

3. TORQUE STEERING KNUCKLE TO BALL JOINT

Install and torque the two bolts.
Torque: 80 N–m (820 kgf–cm, 59 ft–lbf)

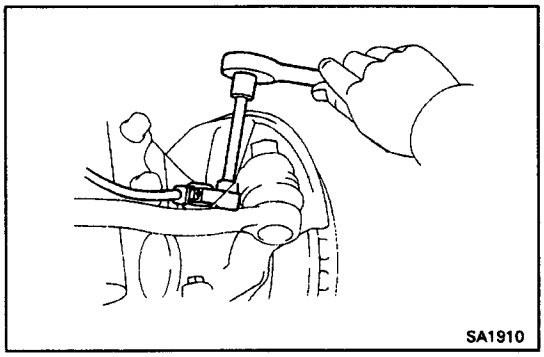

4. (w/ ABS)

INSTALL SPEED SENSOR

Install the speed sensor in place, then install and torque toe bolt.
HINT: Before installing, check that there is no ferric chip of foreign material on the sensor tip.
Torque: 7.8 N–m (80 kgf–cm, 69 in.·lbf)

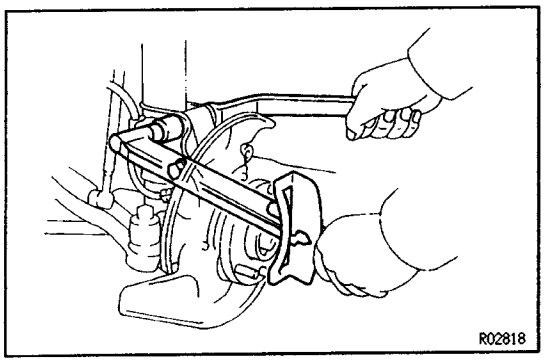

5. TORQUE STEERING KNUCKLE TO SHOCK ABSORBER

Torque: 173 N–m (1,760 kgf–cm, 127 ft–lbf)

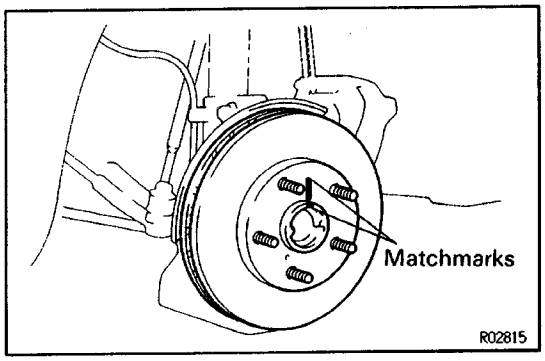

6. INSTALL ROTOR DISC TO AXLE HUB

HINT: Before removing the rotor disc, place the matchmarks on the axle hub and rotor disc.

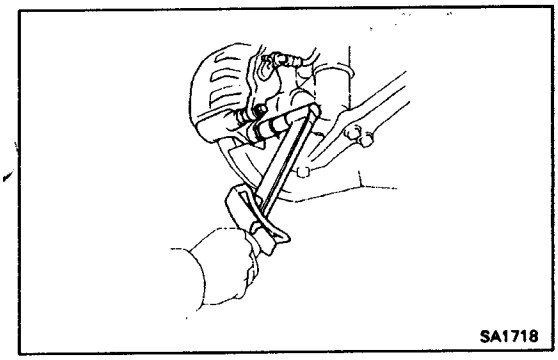

7. INSTALL DISC BRAKE CALIPER TO STEERING KNUCKLE

Install and torque the two bolts.

Torque: 88 N–m (900 kgf–cm, 66 ft–lbf)

8. INSTALL FRONT WHEEL AND LOWER VEHICLE

Torque: 103 N–m (1,050 kgf–cm, 76 ft–lbf)

9. CHECK FRONT WHEEL ALIGNMENT

(See page SA–3)

FRONT AXLE HUB BOLT REPLACEMENT

1. JACK UP VEHICLE AND REMOVE FRONT WHEEL

2. REMOVE BRAKE CALIPER

(a) Remove the two bolts.

(b) Remove the brake caliper from the steering knuckle and suspend it with a wire.

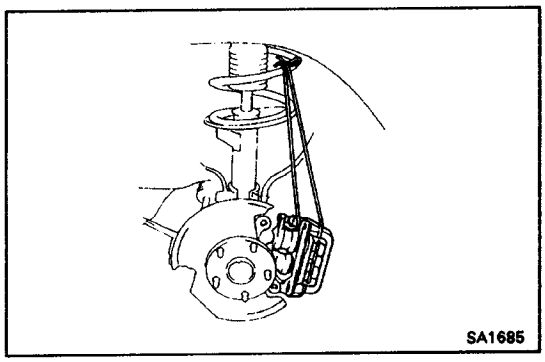

3. REMOVE ROTOR DISC

Remove the rotor disc.

HINT: Before removing the rotor disc, place the matchmarks on the axle hub and rotor disc.

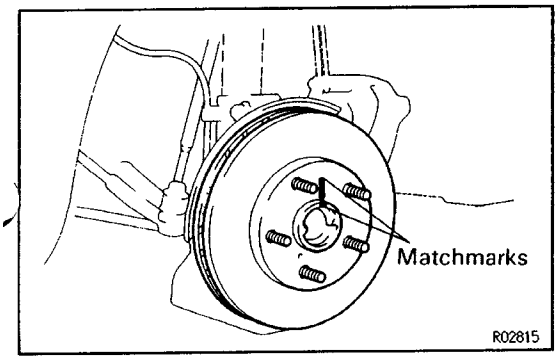

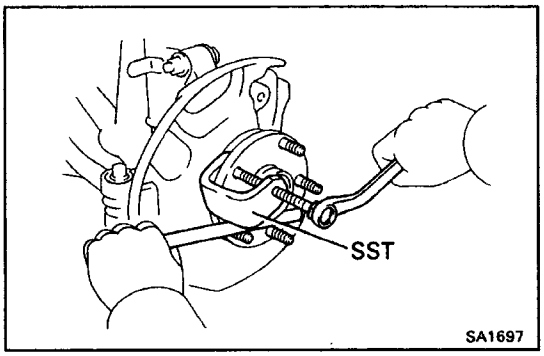

4. REMOVE FRONT AXLE HUB BOLT

(a) Align the disc brake dust cover cutting portion and axle hub bolt.

(b) Using SST, remove the axle hub bolt.
SST 09628–1001 1

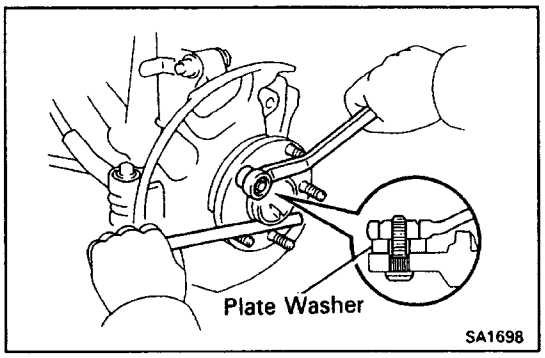

5. INSTALL FRONT AXLE HUB BOLT

(a) Install a new hub bolt from the backing plate side.

(b) Install the suitable washer and nut.

(c) Tighten the nut, while holding the axle hub.

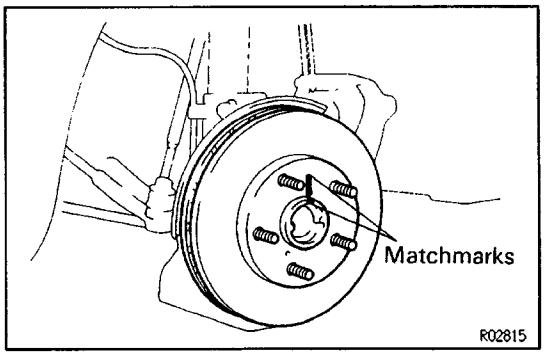

6. INSTALL ROTOR DISC

Align the matchmarks and install the rotor disc to the axle hub.

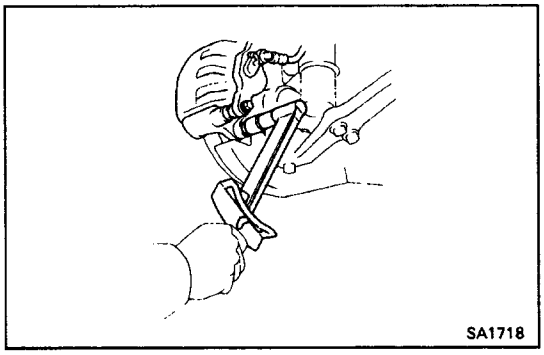

7. INSTALL DISC BRAKE CALIPER TO STEERING KNUCKLE

Install and torque the two bolts.

Torque: 59 N–m (600 kgf–cm, 43 ft–lbf)

8. INSTALL FRONT WHEEL AND LOWER VEHICLE

Torque: 103 N–m (1,050 kgf–cm, 76 ft–lbf)

PREPARATION

SST (SPECIAL SERVICE TOOLS)

SA0AV–01

	09308–00010 Oil Seal Puller	
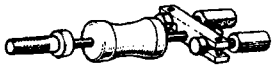	09520–00031 Rear Axle Shaft Puller	
	09608–30012 Front Hub & Drive Pinion Bearing Tool Set	
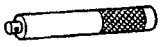	(09608–04020) Handle	
	(09608–04060) Front Hub Outer Bearing Cup Replacer	
	(09608–04070) Front Hub Inner Bearing Cup Replacer	
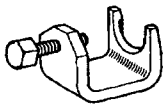	09628–10011 Ball Joint Puller	
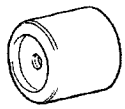	09649–17010 Steering Knuckle Tool	
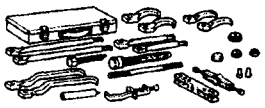	09950–20017 Universal Puller	

RECOMMENDED TOOLS

SA0AW–01

	09905–00013 Snap Ring Pliers	

EQUIPMENT

SA0AX–01

Dial indicator	
Torque wrench	

BALL JOINT

SA0BC – 01

COMPONENTS

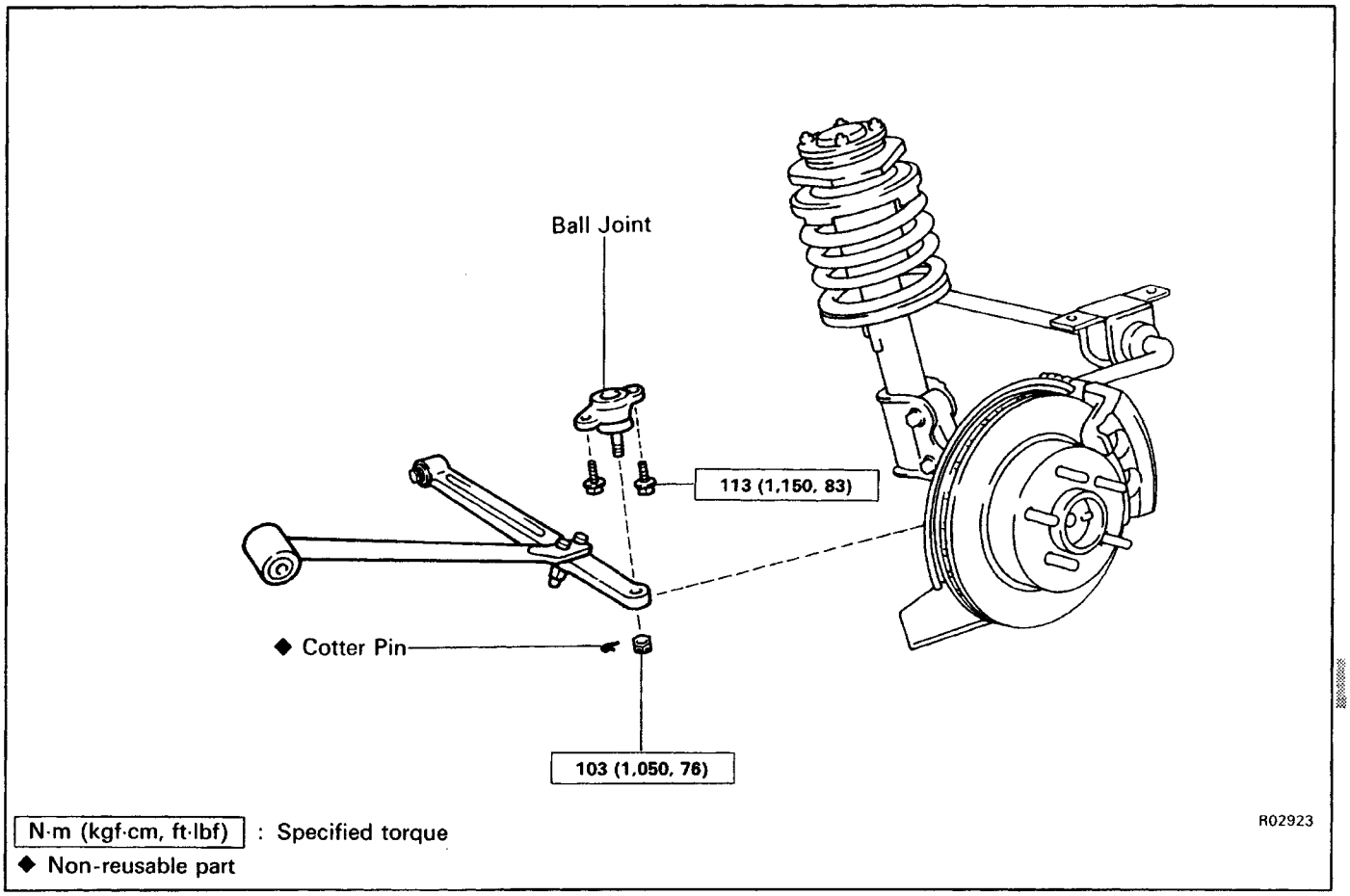

N·m (kgf·cm, ft·lbf) : Specified torque
◆ Non-reusable part

BALL JOINT ON–VEHICLE INSPECTION

1. INSPECT BALL JOINTS FOR EXCESSIVE LOOSENESS

(a) Jack up the front of the vehicle and place a wooden block with a height of 180–200 mm (7.09–7.87 in.) under one front tire.

(b) Lower the jack until there is about half a load on the front coil spring. Place stands under the vehicle for safety.

(c) Make sure the front wheels are in a straight forward position and block the wheel with chocks.

(d) Move the lower arm up and down check that the ball joint no excessive play.

Ball joint vertical play:

0 mm (0 in.)

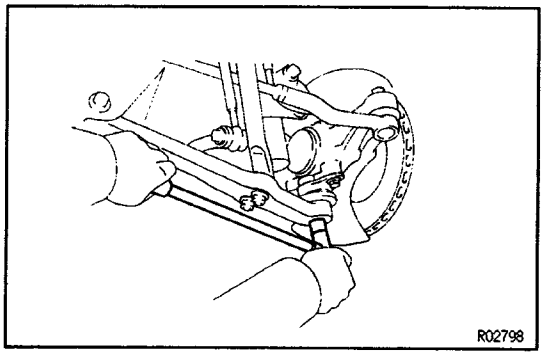

8AC8E-01

BALL JOINT REMOVAL

1. JACK UP VEHICLE AND REMOVE FRONT WHEEL

2. DISCONNECT LOWER ARM FROM BALL JOINT

(a) Remove the cotter pin and nut.

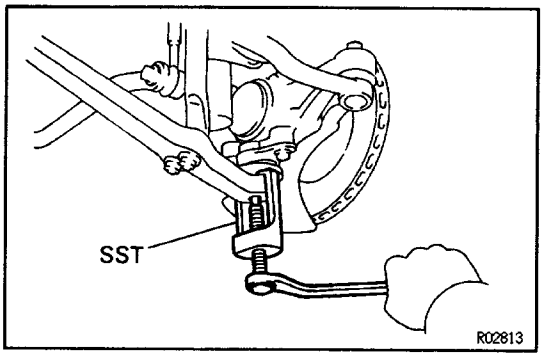

(b) Using SST, disconnect the lower arm from the ball joint.
SST 09610–20012

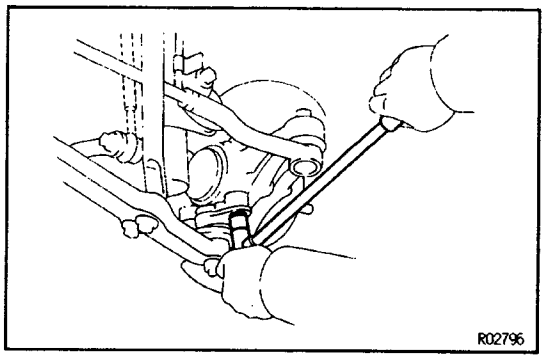

3. REMOVE BALL JOINT FROM AXLE CARRIER

Remove the two bolts and ball joint.

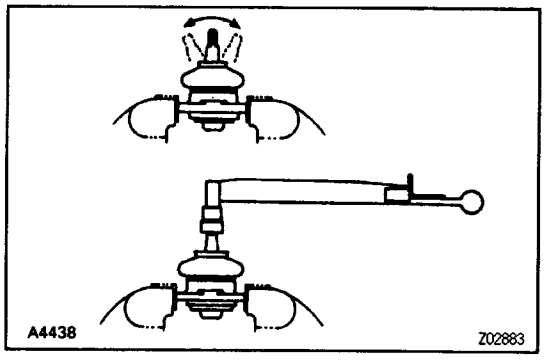

8AC8F-01

BALL JOINT INSPECTION

1. INSPECT BALL JOINT FOR ROTATION

(a) Remove the ball joint.

(b) Flip the ball joint stud back and forth 5 times as shown in the figure, before installing the nut.

(c) Using a torque gauge, turn the nut continuously one turn each 2–4 seconds and take the torque reading on the fifth turn.

Torque (turning):

0.8 N–m (8–25 kgf–cm, 7–22 in.· lbf)

If not within specification, replace the ball joint.

SA0BG–01

BALL JOINT INSTALLATION

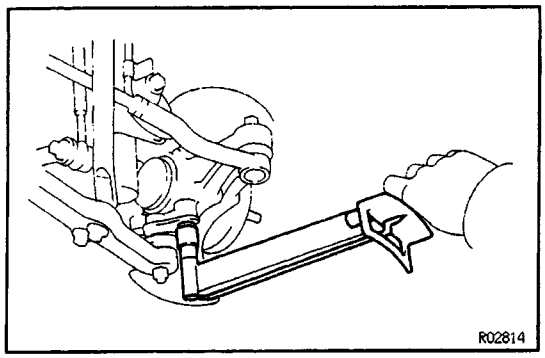

1. INSTALL BALL JOINT TO AXLE CARRIER

Install ball joint to the axle carrier with the two bolts.

Torque: 80 N–m (820 kgf–cm. 59 ft–lbf)

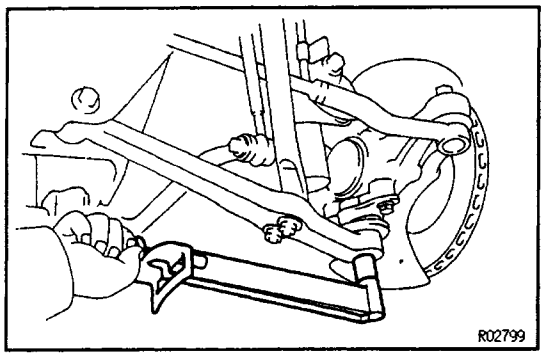

2. CONNECT BALL JOINT TO LOWER ARM

(a) Connect the ball joint to lower arm with the nut.

Torque: 78 N–m (800 kgf–cm, 58 ft–lbf)

(b) Install a new cotter pin.

FRONT SUSPENSION

DESCRIPTION

SA0B4–01

The front suspension of the new model use MacPherson struts as in the previous model.
The strut bar changed the cushion type into the bushing type.
The basic construction and operation remain the same, but the suspension geometry and the bushings have been modified to improve stability and riding comfort.

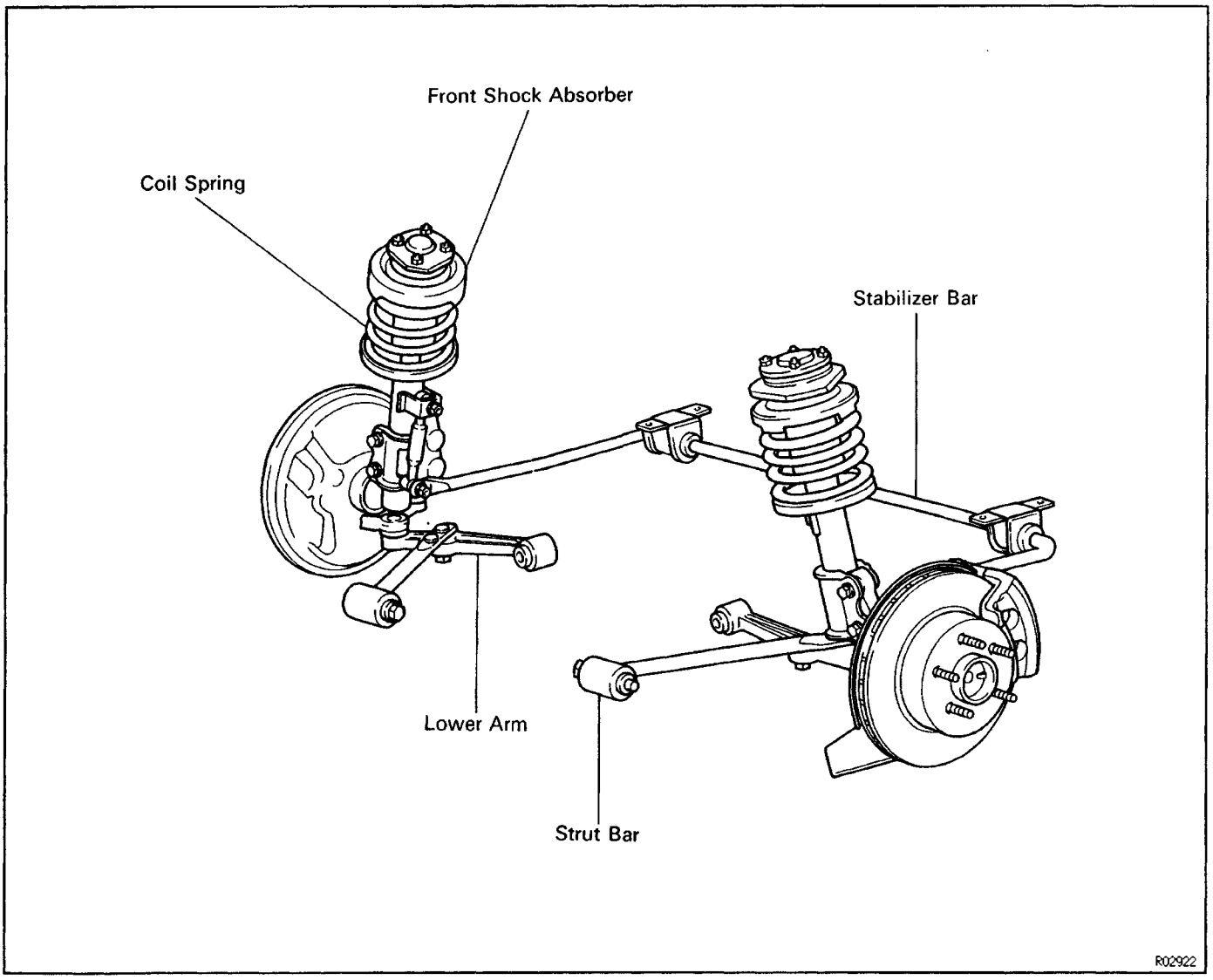

FRONT SHOCK ABSORBER

SA088-01

COMPONENTS

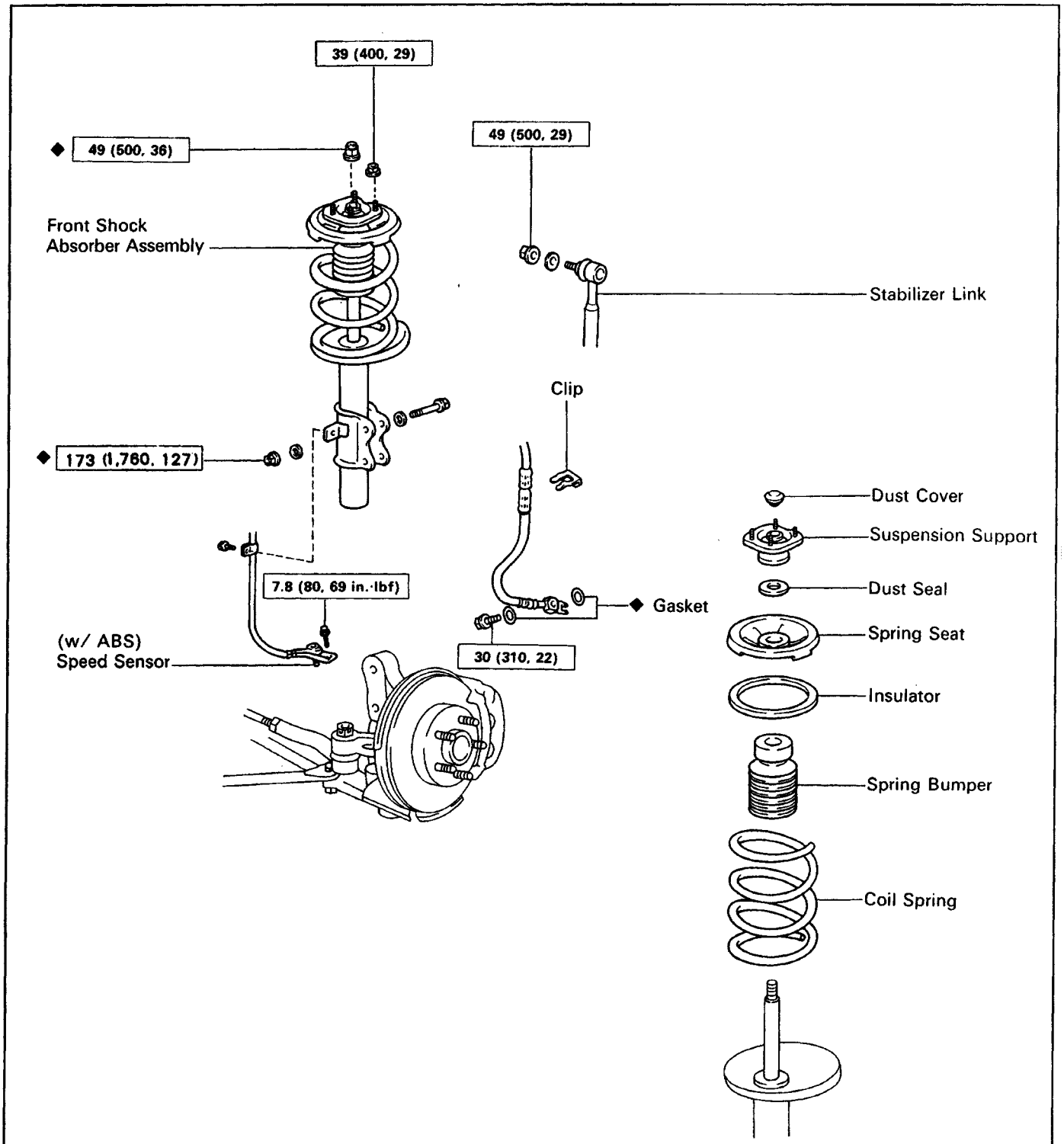

N·m (kgf·cm, ft·lbf) : Specified torque

◆ Non-reusable part

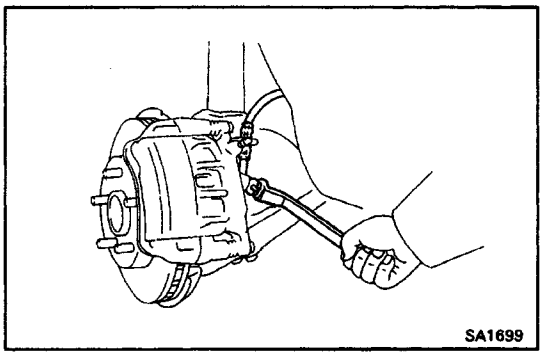

FRONT SHOCK ABSORBER ASSEMBLY REMOVAL

1. JACK UP VEHICLE AND REMOVE FRONT WHEEL

2. DISCONNECT BRAKE HOSE

(a) Remove the union bolt and two gaskets, and disconnect the brake hose from the disc brake caliper.

HINT: Drain the brake fluid into a container.

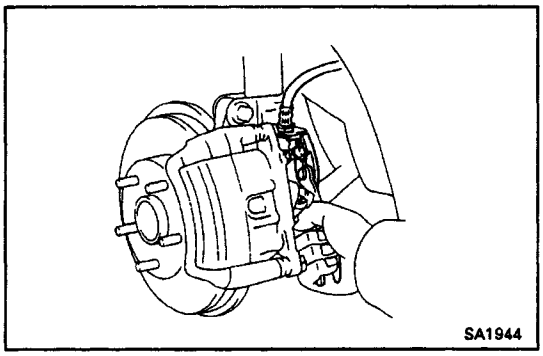

(b) Remove the clip from the brake hose.

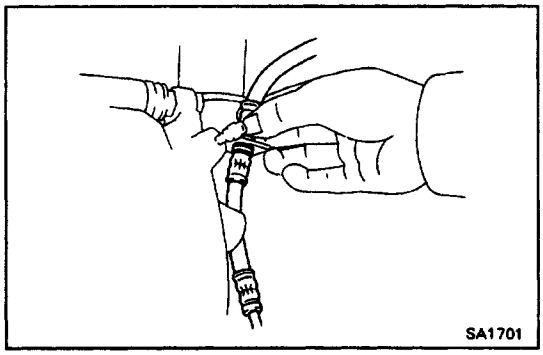

(c) Pull off the brake hose from the brake hose bracket.

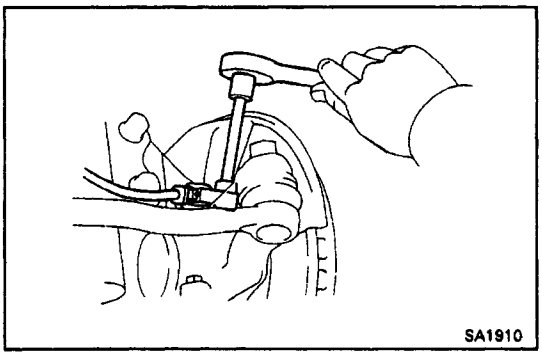

3. (w/ ABS)

REMOVE SPEED SENSOR AND WIRE HARNESS CLAMP

(a) Remove the bolt and pull out the speed sensor.

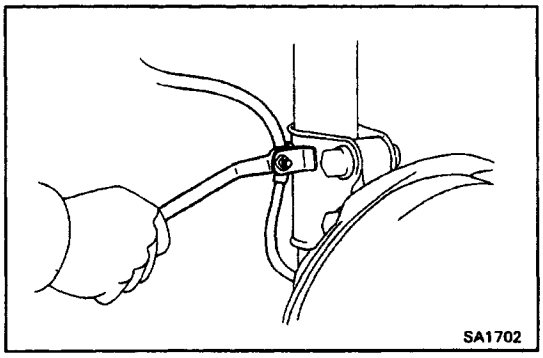

(b) Remove the speed sensor wire harness clamp bracket bolt.

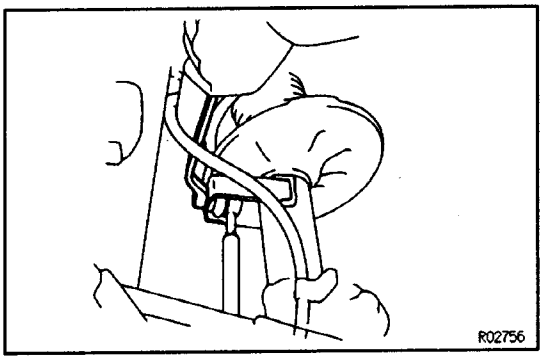

4. DISCONNECT STABILIZER LINK

Disconnect the stabilizer link from the shock absorber.

HINT: If the ball joint stud turns together with the nut, use a hexagon wrench 5 mm (0.197 in.) to hold the stud.

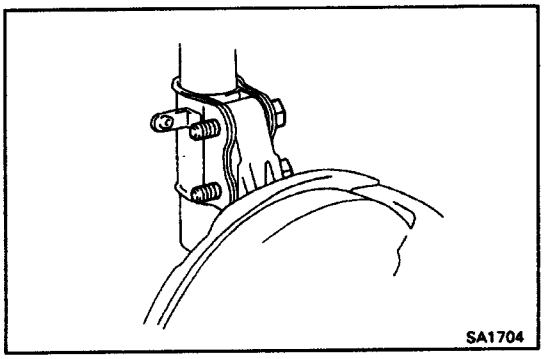

5. DISCONNECT SHOCK ABSORBER FROM STEERING KNUCKLE

Remove the washers, bolts and nuts, disconnect the shock absorber from the steering knuckle.

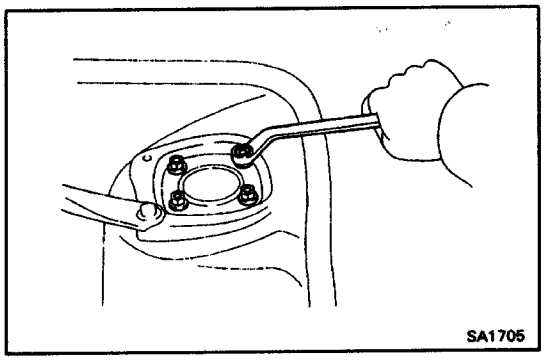

6. REMOVE SHOCK ABSORBER FROM BODY

(a) Remove the four nuts holding the top of the suspen–sion support.

(b) Remove the shock absorber from the body.

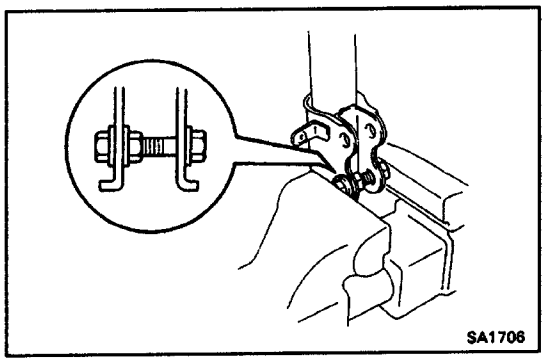

7. CLAMP SHOCK ABSORBER IN VISE

Install a bolt and two nuts to the bracket at the lower portion of the shock absorber shell and secure it in a vise.

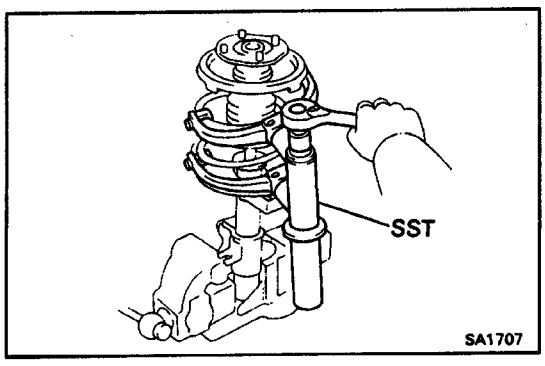

8. REMOVE COIL SPRING

(a) Using SST, compress the coil spring.

SST 09727–00045, 09727–30020

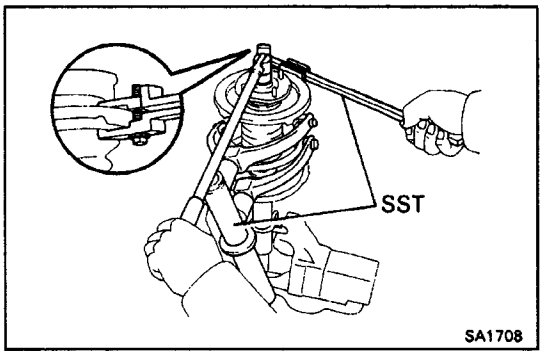

(b) Remove the dust cover.
(c) Using SST, hold the spring seat so that it will not turn, and remove the nut.
SST 09729–22031
(d) Remove the suppension support, dust seal, spring seat, spring, insulators and bumper.

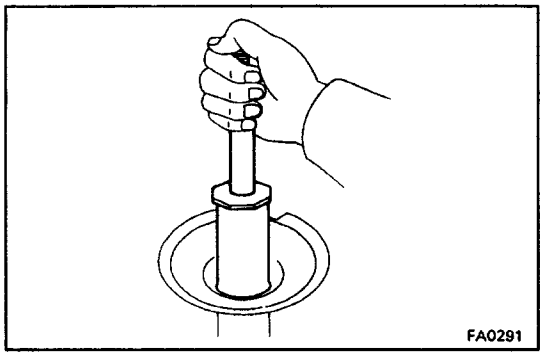

FRONT SHOCK ABSORBER ASSEMBLY INSPECTION

INSPECT OPERATION OF SHOCK ABSORBER

(a) While pushing rod, check that the pull throughout the stroke is even, and there is no abnormal resistance or noise.
(b) Push the piston rod in fully and release it. Check that it returns at a constant speed throughout.
If the absorber operation is defective, replace the absorber, as and assembly.
NOTICE: Before discarding the shock absorber, first loosen the ring nut 2 or 3 turns with SST to release the gas completely.
SST 09720–00012

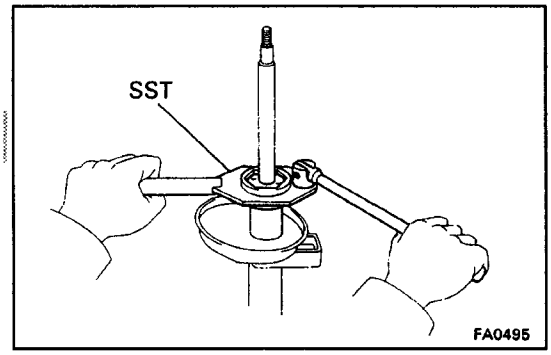

FRONT SHOCK ABSORBER ASSEMBLY INSTALLATION

1. INSTALL BUMPER COIL SPRING, SPRING SEAT AND DUST SEAL

(a) Using SST, compress the coil spring.
SST 09727–00045,09727–30020
(b) Install the bumper to the piston rod.
(c) Align the coil spring end with the lower seat hollow and install.
(d) Face the ”OUT” mark of the spring seat toward the outside of the vehicle, and install it.
(e) Install the dust seal on the spring seat.
(f) Install the suppension support.

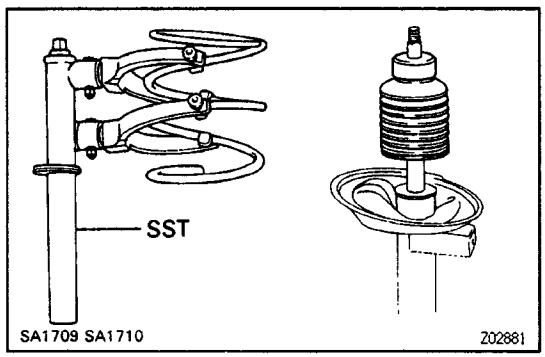

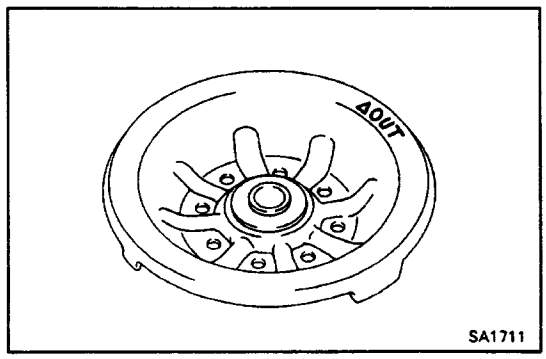

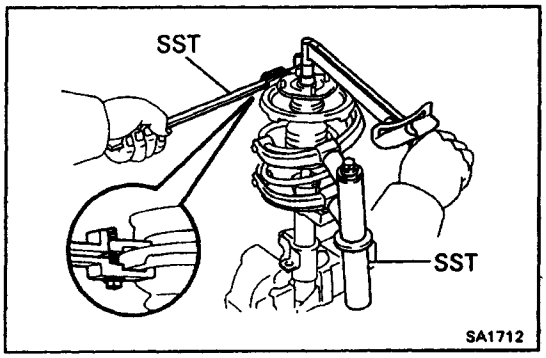

(g) Using SST, install and torque a new suspension support nut.
SST 09729–22031
Torque: 49 N–m (500 kgf–cm, 36 ft–lbf)
(h) Install the dust cover.

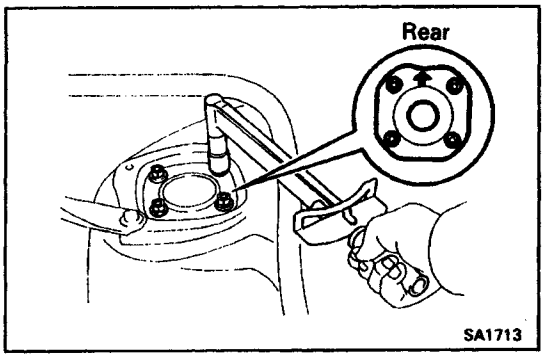

2. INSTALL SHOCK ABSORBER ASSEMBLY TO BODY
Install the four bolts holding the shock absorber to the body. Torque the nuts.
HINT: install the shock absorber with the hollow part to the rearward.
Torque: 39 N–m (400 kgf–cm, 29 ft–lbf)

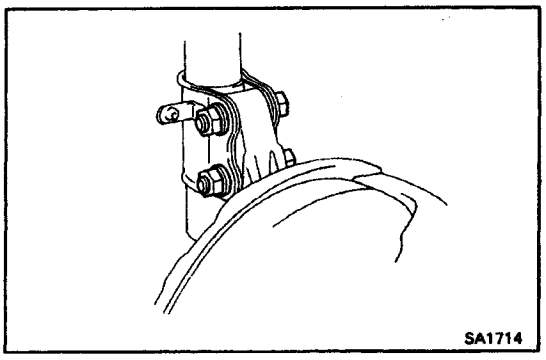

3. CONNECT SHOCK ABSORBER TO STEERING KNUCKLE
(a) Connect the steering knuckle to the shock absorber.
(b) Install the washers and bolts from the rear side.
(c) Install the two washers and nuts.
Torque: 173 N–m (1,760 kgf–cm, 127 ft–lbf)

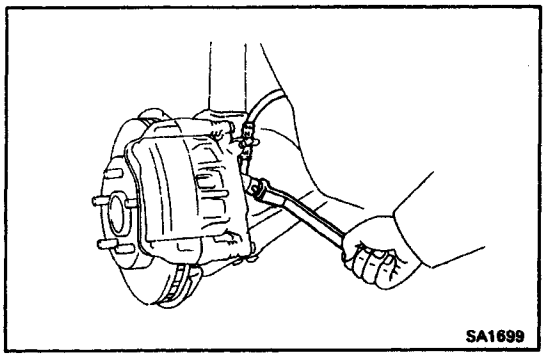

4. CONNECT BRAKE HOSE
(a) Run the brake hose through the brake hose bracket.

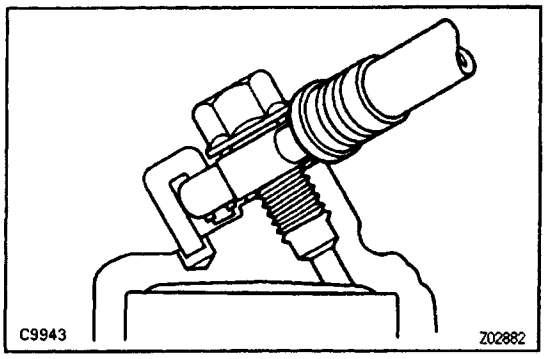

(b) Connect the brake hose through the disc brake caliper with the union and new gaskets.
Torque: 30 N–m (310 kgf–cm, 22 ft–lbf)

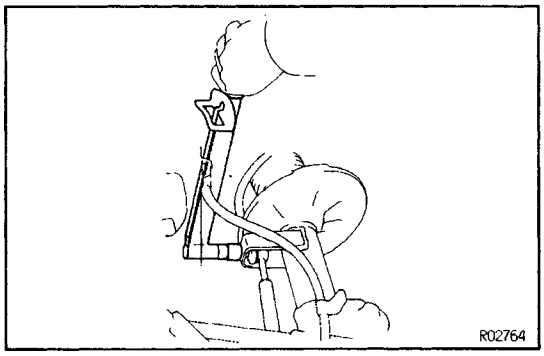

5. CONNECT STABILIZER LINK

Connect the stabilizer link to the shock absorber with the washer and nut.

HINT: If the ball joint stud turns together with the nut, use a hexagon wrench 5 mm (0.197 in.) to hold stud.

Torque: 64 N–m (650 kgf–cm, 47 ft–lbf)

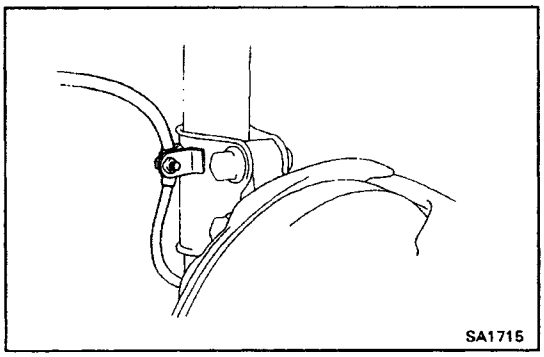

6. (w/ ABS)

INSTALL WIRE HARNESS CLAMP AND SPEED SENSOR

(a) Install the speed sensor wire harness clamp to the shock absorber with the bolt.

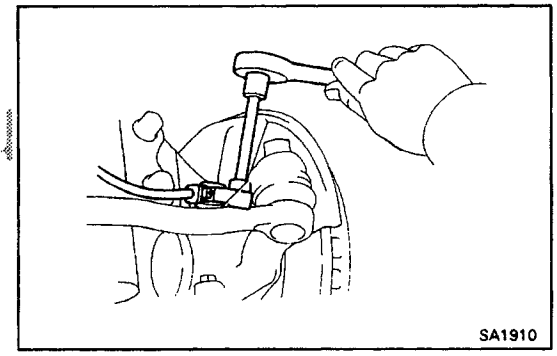

(b) Install the speed sensor to the axle carrier with the bolt.

Torque: 7.8 N–m (80 kgf–cm, 69 ft–lbf)

7. BLEED BRAKE SYSTEM

(See page BR–9**)**

8. INSTALL FRONT WHEEL AND LOWER VEHICLE

9. CHECK FRONT WHEEL ALIGNMENT

(See page SA–3**)**

LOWER SUSPENSION ARM

SA0BH–01

COMPONENTS

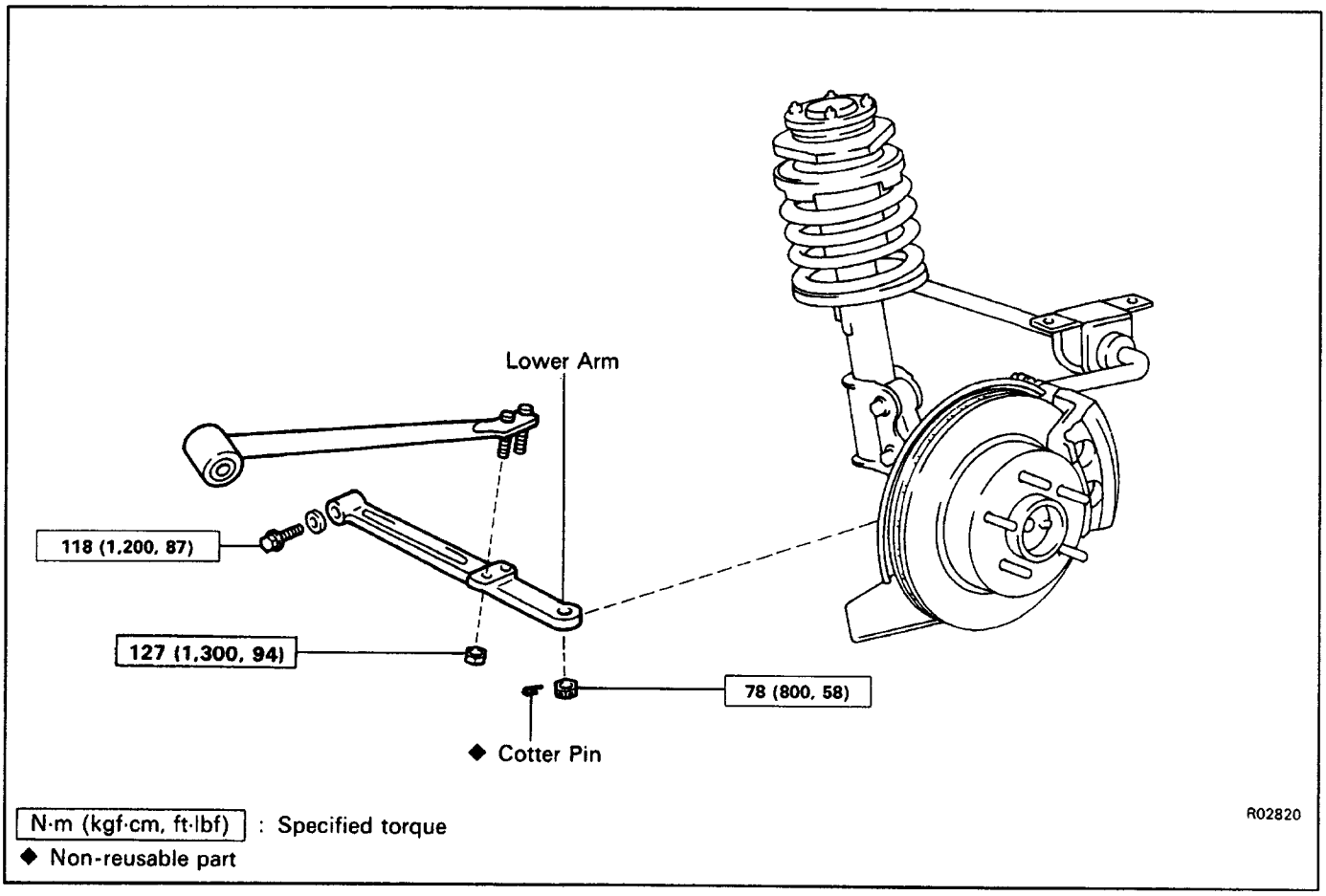

N·m (kgf·cm, ft·lbf) : Specified torque
◆ Non-reusable part

SA0BJ–01

LOWER ARM REMOVAL

1. JACK UP VEHICLE AND REMOVE FRONT WHEEL

2. DISCONNECT LOWER ARM FROM BALL JOINT

(a) Remove the cotter pin and castle nut.

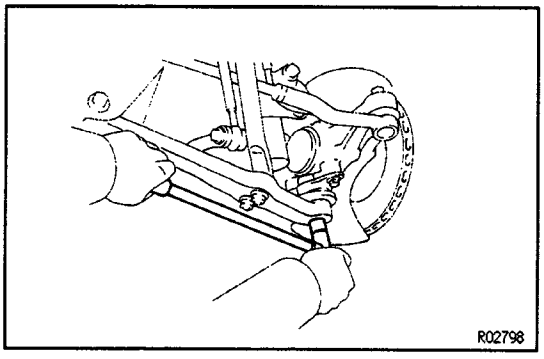

(b) Using SST, disconnect the lower arm from the ball joint.
SST 09610–20012

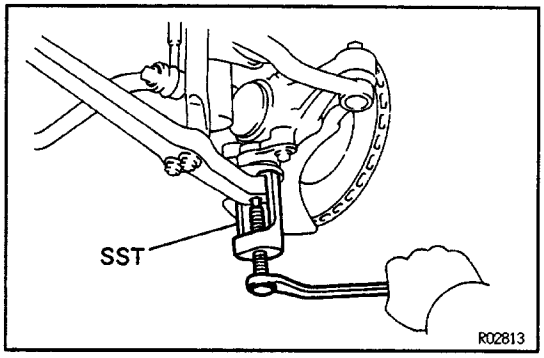

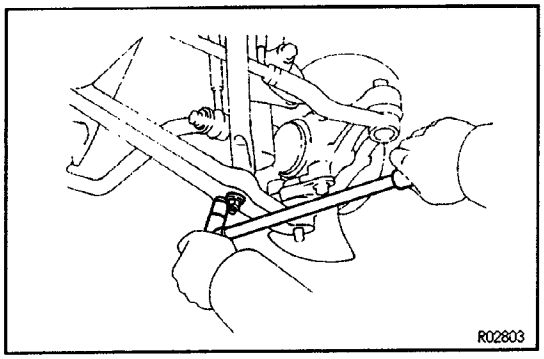

3. DISCONNECT STRUT BAR FROM LOWER ARM

Remove the two nuts and disconnect the strut bar from the lower arm.

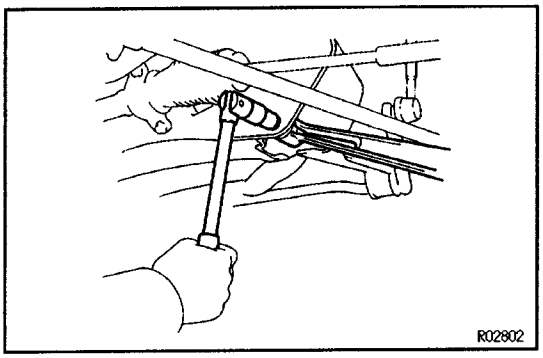

4. REMOVE LOWER ARM

(a) Remove the bolt and washer.

(b) Remove the lower arm from the body.

LOWER ARM INSTALLATION

SA08K–01

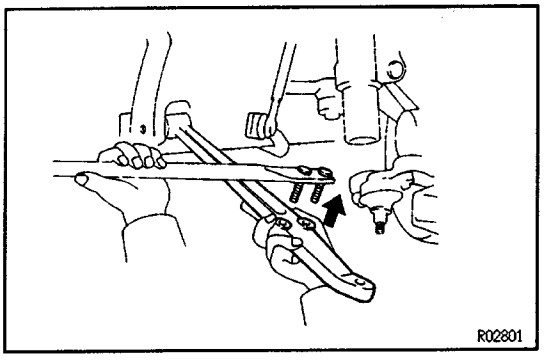

1. INSTALL LOWER ARM

(a) Temporarily install the strut bar to the lower arm with the nuts.

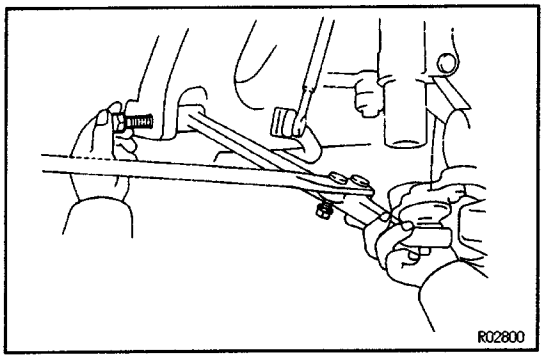

(b) Temporarily install the lower arm to the body with the washer and bolt.

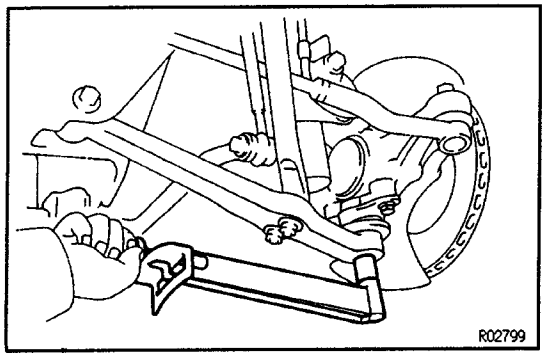

2. CONNECT LOWER ARM TO BALL JOINT

(a) Connect the lower arm to the ball joint and torque the castle nut.

HINT: If the hole in the ball joint is not aligned with the grooves of the nut, tighten the nut until they match.

Torque: 78 N–m (800 kgf–cm, 58 ft–lbf)

(b) Install a new cotter pin.

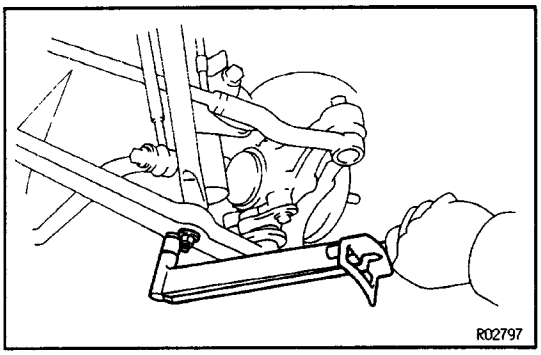

3. TORQUE STRUT BAR TO LOWER ARM

Torque: 127 N–m (1,300 kgf–cm, 94 ft–lbf)

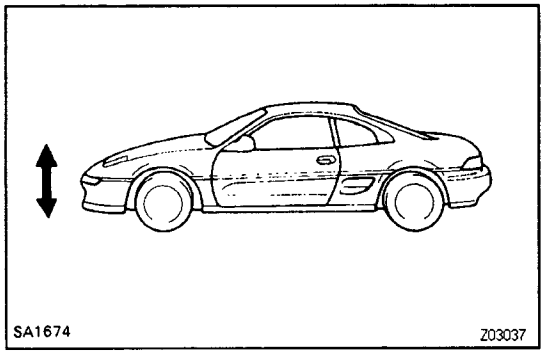

4. TORQUE LOWER ARM TO BODY

(a) Install the wheel and lower the vehicle.

Torque: 103 N–m (1,050 kgf–cm, 76 ft–lbf)

(b) Bounce the vehicle up and down several times allow the suspension to settle.

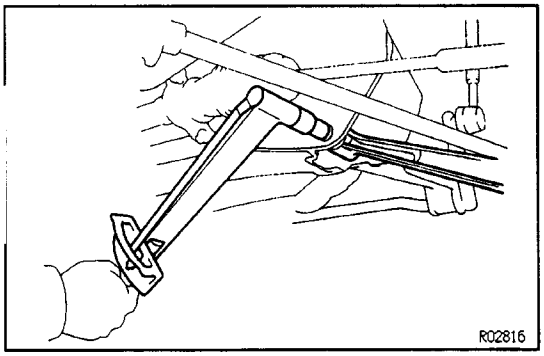

(c) Torque the bolts with the vehicle load applied on the suspension.

Torque: 118 N–m (1,200 kgf–cm, 87 ft–lbf)

PREPARATION

SST (SPECIAL SERVICE TOOL)

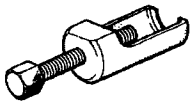	09610–20012 Pitman Arm Puller	
	09720–00012 Shock Absorber Overhaul Tool Set	
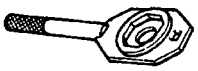	(09721–00071) Front Shock Absorber Ring Nut Wrench	
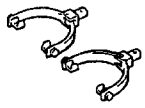	09727–00045 Arm Set	
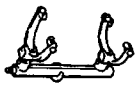	09727–30020 Coil Spring Compressor	
	09729–22031 Front Spring Upper Seat Holder	

RECOMMENDED TOOLS

SA0B6–01

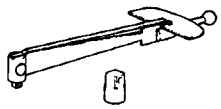	09025–00010 Small Torque Wrench	

EQUIPMENT

SA0B7–01

Torque wrench	

STABILIZER BAR

SA0BP–01

COMPONENTS

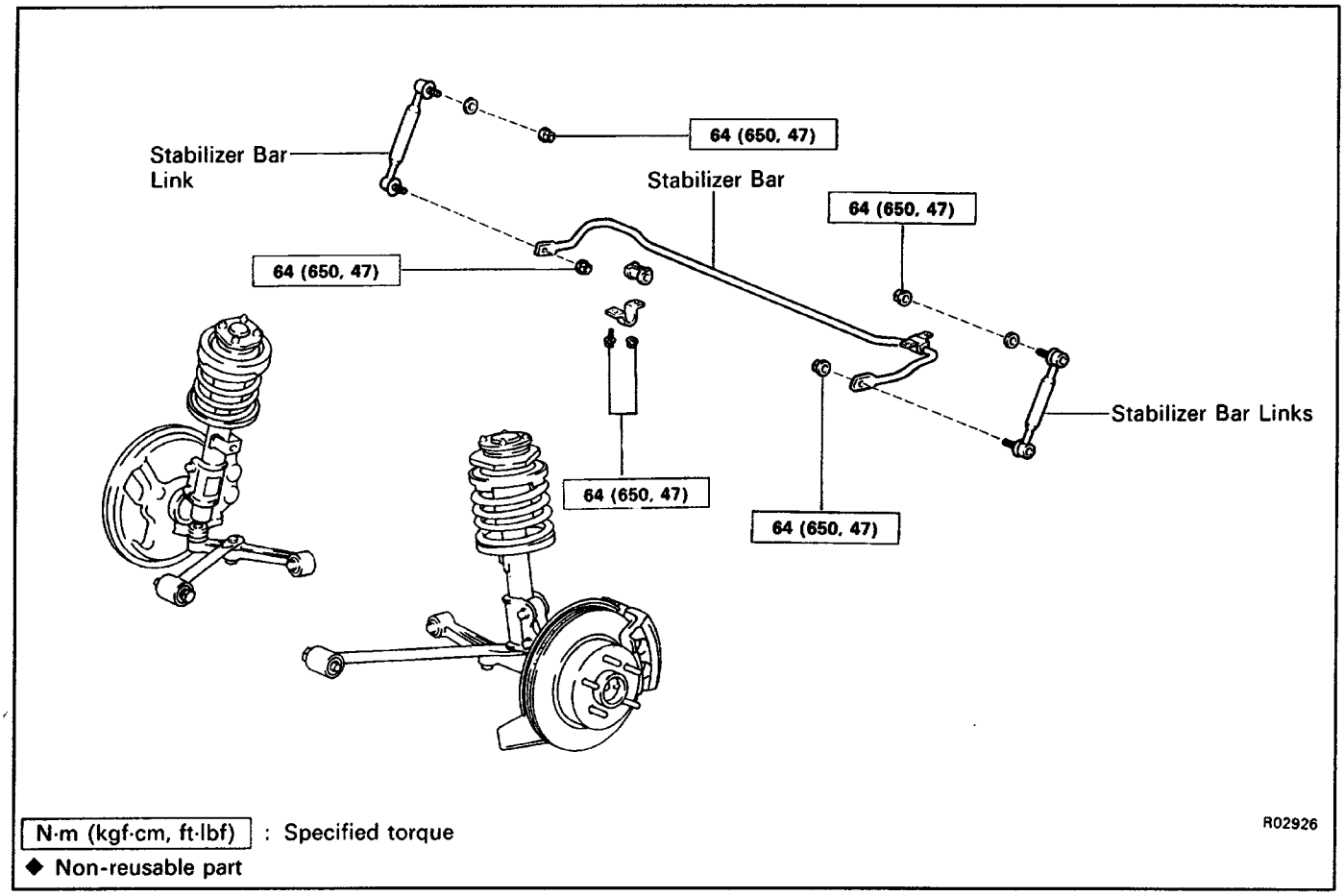

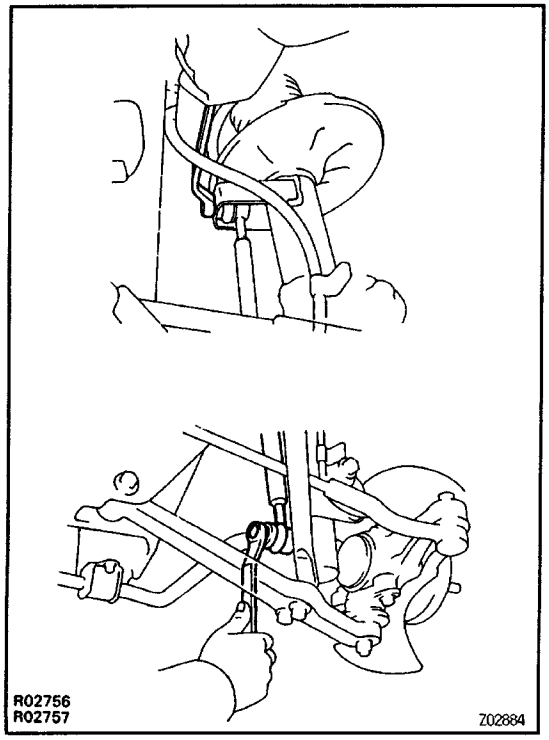

STABILIZER BAR REMOVAL

SA0BQ–01

1. REMOVE LEFT AND RIGHT STABILIZER BAR LINKS

(a) Remove the huts and washers.

(b) Remove the stabilizer bar links.

HINT: If the ball joint stud turns together with the nut, use a hexagon wrench 5 mm (0.197 in.) to hold the stud.

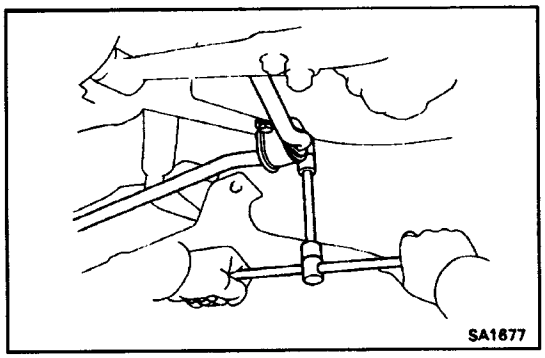

2. REMOVE STABILIZER BAR FROM BODY

(a) Remove the nuts an bolts.

(b) Remove the stabilizer bar with the brackets and cus–hion.

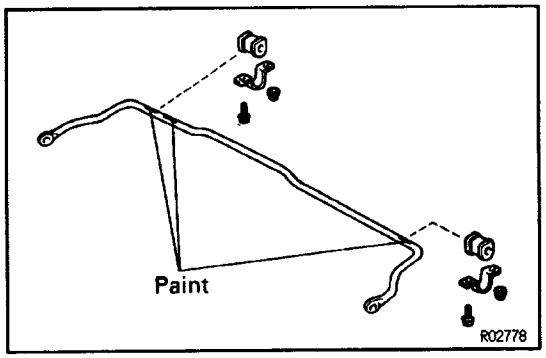

3. REMOVE STABILIZER BAR BRACKETS AND STA–BILIZER BAR CUSHIONS FROM STABILIZER BAR

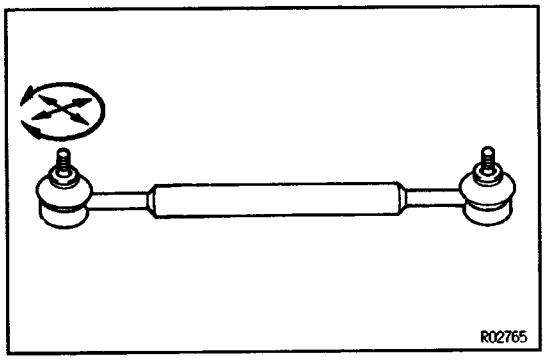

SA0BR–01

STABILIZER BAR INSPECTION

INSPECT STABILIZER LINK

Rotate ball joint arm in all directions. If movement is not smooth and free, replace stabilizer link.

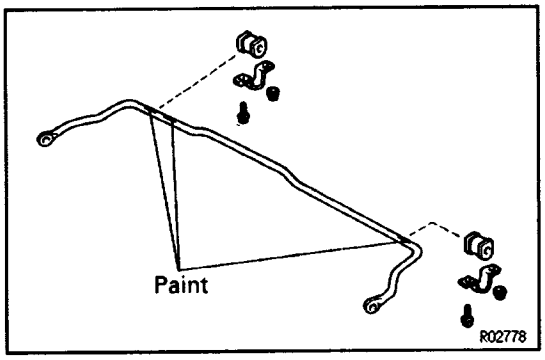

SA0BS–01

STABILIZER BAR INSTALLATION

1. INSTALL STABILIZER BAR

(a) Install the stabilizer cushions on the painted portione of the stabilizer.

(b) Install the stabilizer bar in place, then install the both stabilizer brackets.

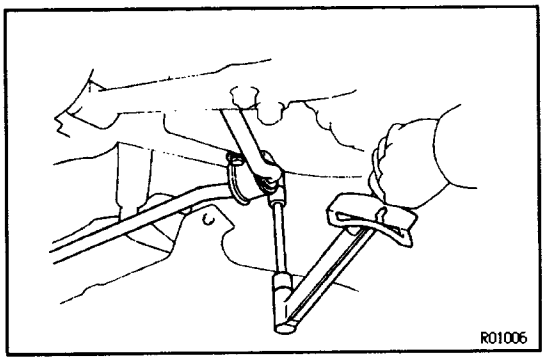

2. INSTALL STABILIZER BAR TO BODY

Install the stabilizer bar to the body with the bolts and nuts.

Torque: 64 N–m (650 kgf–cm, 47 ft–lbf)

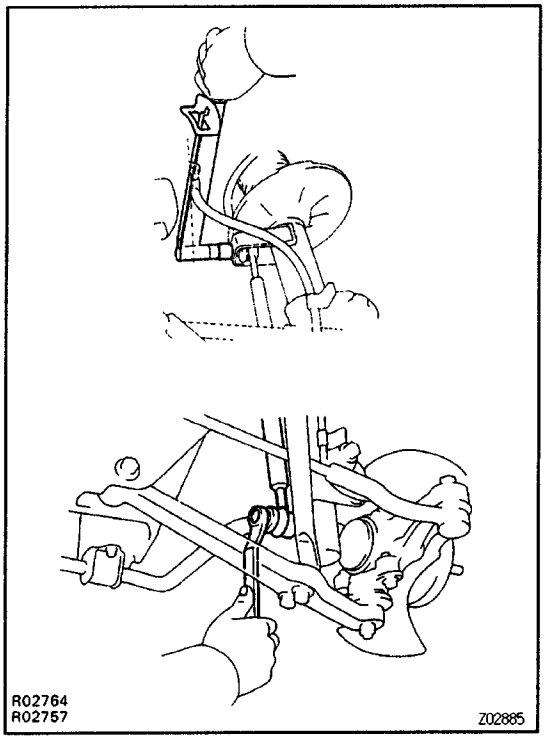

3. INSTALL STABILIZER LINKS

Install the stabilizer bar links with the washer and nuts.

HINT: If the ball joint stud turns together with the nut, use a hexagon wrench 5 mm (0.197 in.) to hold the stud.

Torque: 64 N–m (650 kgf–cm, 47 ft–lbf)

STRUT BAR

SA0BL–01

COMPONENTS

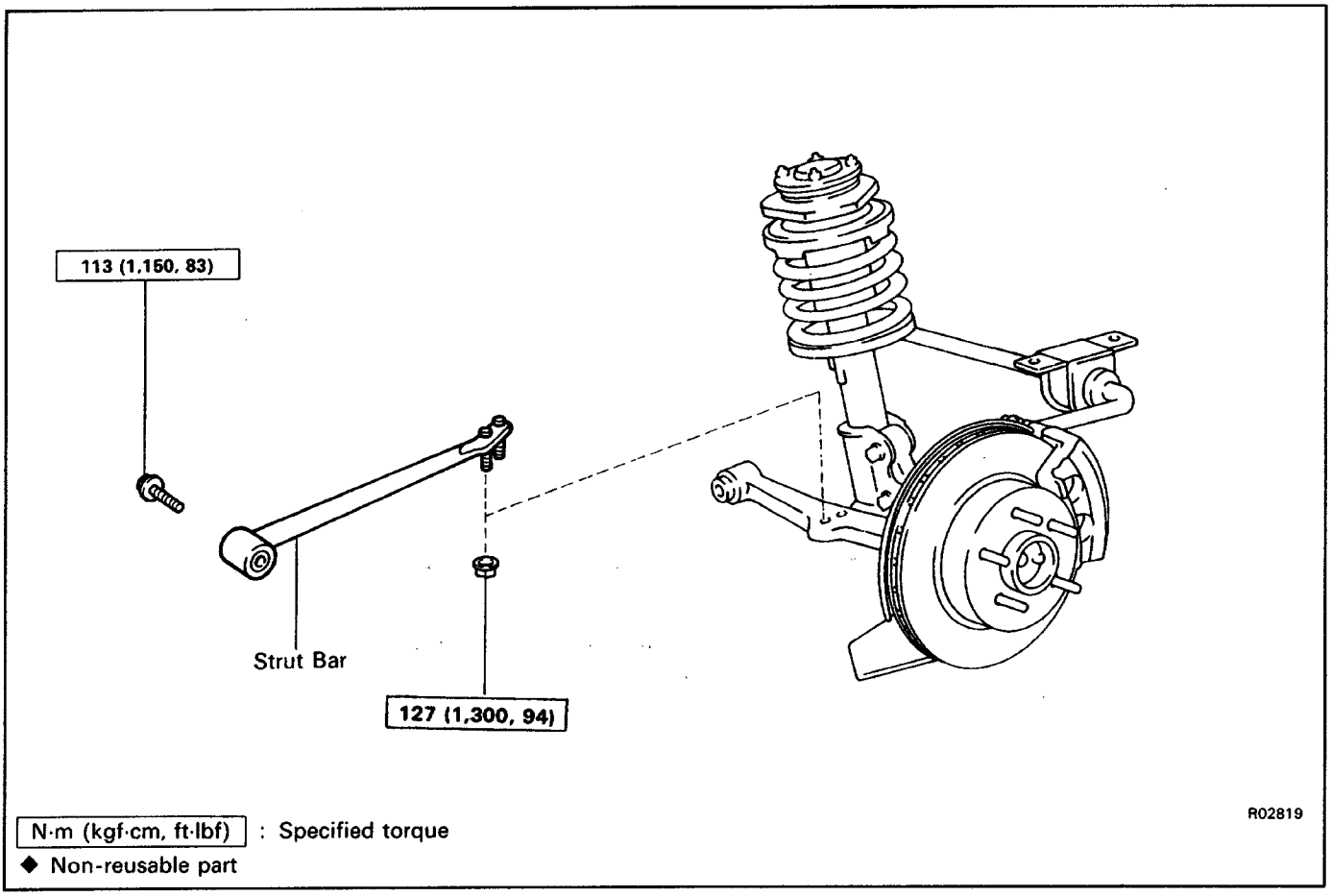

N·m (kgf·cm, ft·lbf) : Specified torque
◆ Non-reusable part

SA0BM–01

STRUT BAR REMOVAL

1. REMOVE STRUT BAR

(a) Remove the bolt and disconnect the strut bar from the body.

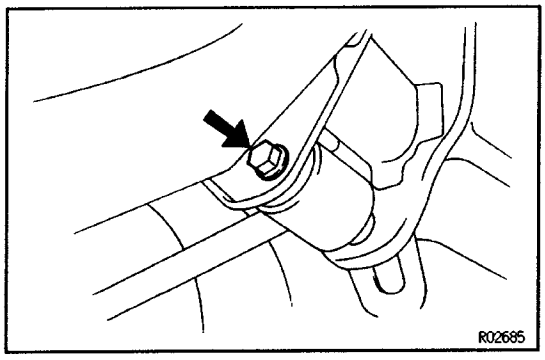

(b) Remove the two nuts and strut bar.

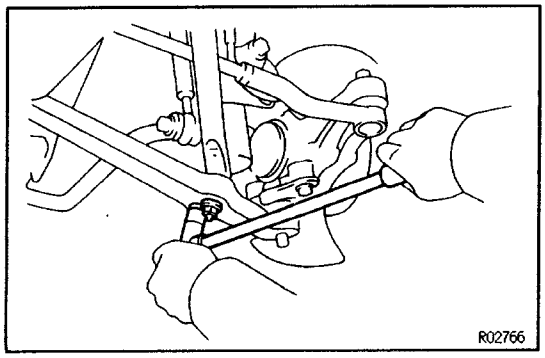

SAGBN – 01

STRUT BAR INSTALLATION

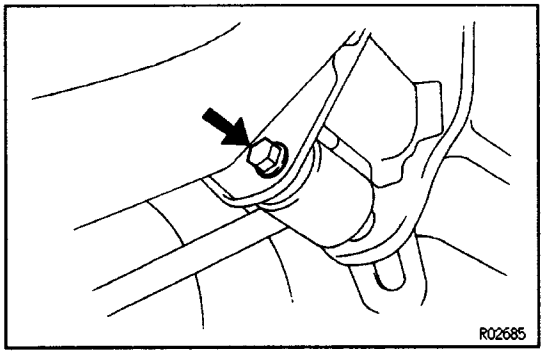

1. INSTALL STRUT BAR

(a) Temporarily install the strut bar to the body with the bolt.

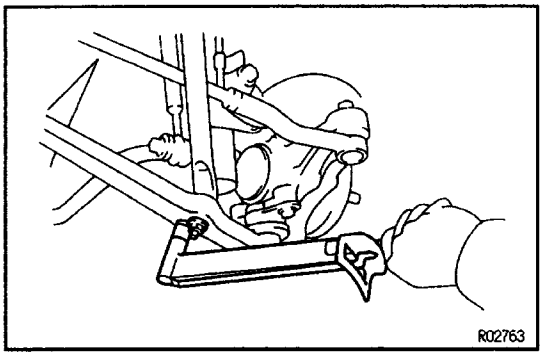

(b) Install the strut bar to the lower arm with the two nuts.

Torque: 113 N–m (1,150 kgf–cm, 83 ft–lbf)

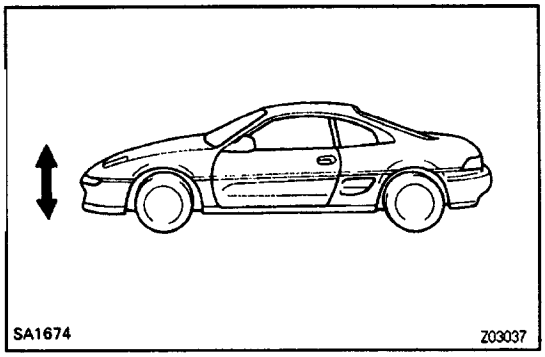

2. STABILIZE SUSPENSION

(a) Lower the vehicle.

Torque: 103 N–m (1,050 kgf–cm, 76 ft–lbf)

(b) Bounce the vehicle up and down several times to allow the suspension to settle.

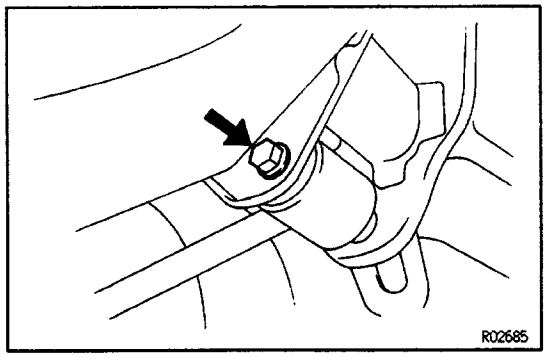

3. TORQUE BOLT

Torque bolt with the vehicle load applied on the suspension.

Torque: 127 N–m (1,300 kgf–cm, 94 ft–lbf)

4. CHECK FRONT WHEEL ALIGNMENT

(See page SA–3)

REAR AXLE

DESCRIPTION

The rear axle also uses oil–sealed double–row angular ball bearings for wheel bearings as the front axle.
The preload of the bearings cam be determined only tightening the axle hub nut at a specified torque, improving serviceability.

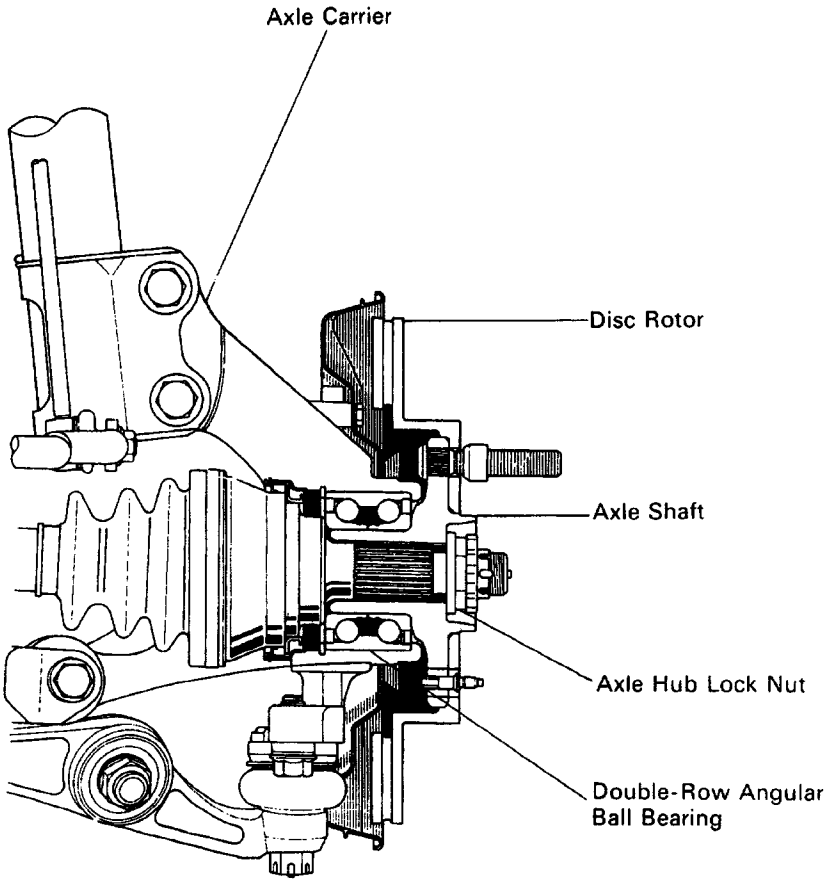

R02927

PREPARATION

SST (SPECIAL SERVICE TOOLS)

SA0BU–01

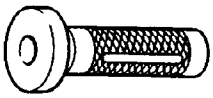	09310–35010 Countershaft Bearing Replacer	
	09315–00021 Clutch Release Bearing Remover & Replacer	
	09316–60010 Transmission & Transfer Bearing Replacer	
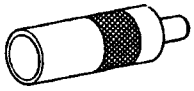	(09316–00010) Replacer Pipe	
	(09316–00040) Replacer “C”	
	09520–00031 Rear Axle Shaft Puller	
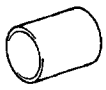	09527–17010 Rear Axle Shaft Bearing Remover	
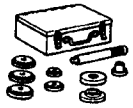	09608–20012 Front Hub & Drive Pinion Bearing Tool Set	
	(09608–00040) Replacer	
	(09608–03020) Handle	
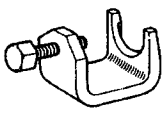	09628–10011 Ball Joint Puller	
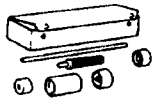	09710–22041 Rear Suspension Bushing Tool Set	
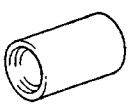	(09710–02050) Base	

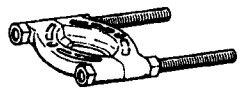	09950–00020 Bearing Remover	

SA0BV–01

RECOMMENDED TOOLS

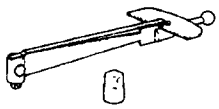	09025–00010 Small Torque Wrench	
	09905–00013 Snap Ring Pliers	

SA0BW–01

EQUIPMENT

Dial indicator	
Torque wrench	

REAR AXLE SHAFT AND CARRIER

COMPONENTS

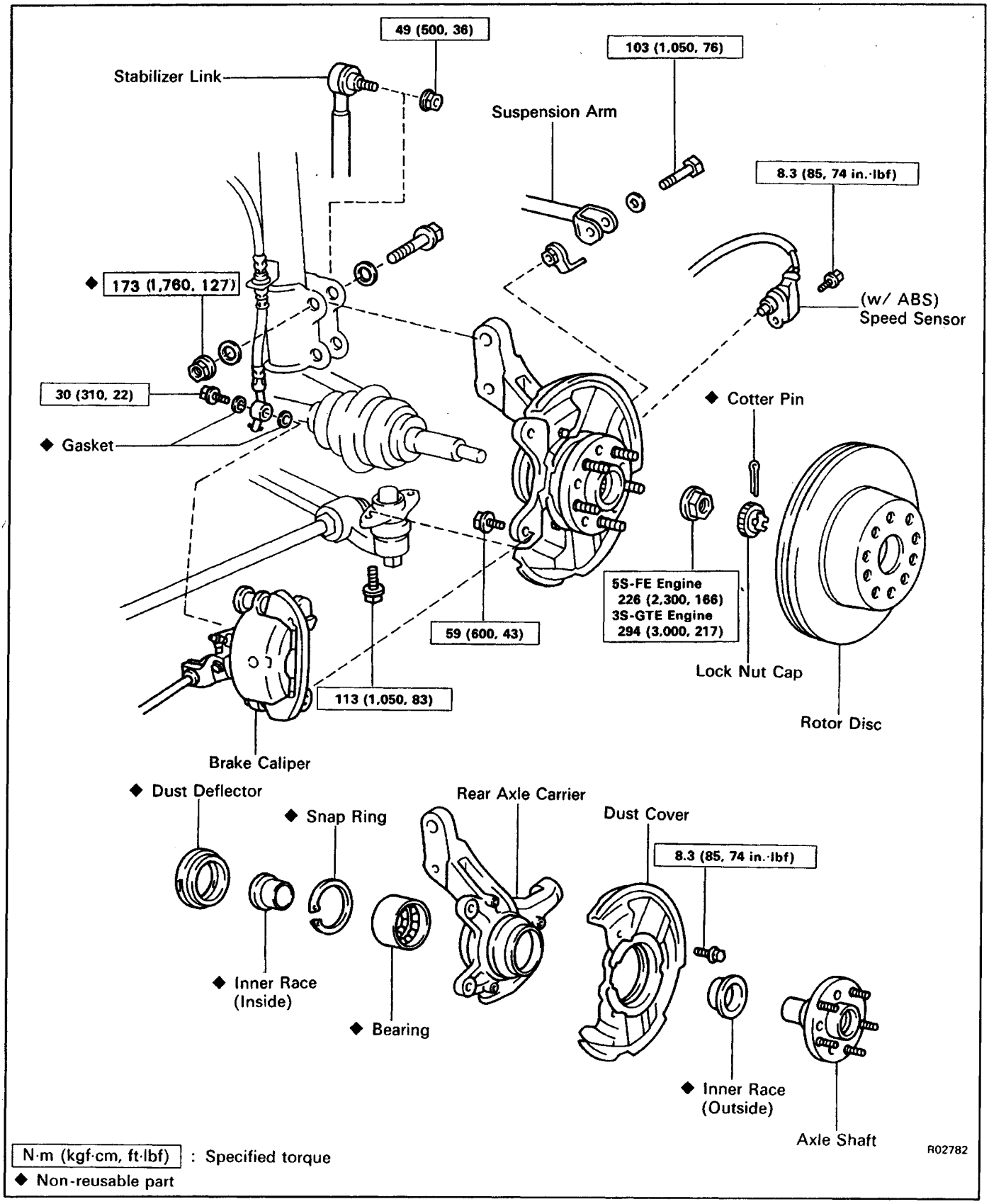

SA0BY–01

REAR AXLE SHAFT AND CARRIER REMOVAL

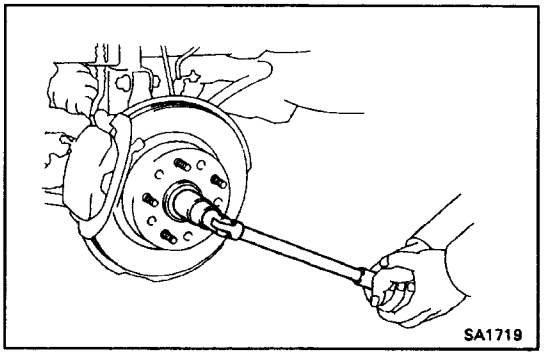

1. JACK UP VEHICLE AND REMOVE REAR WHEEL

2. REMOVE COTTER PIN, BEARING LOCK NUT CAP AND BEARING LOCK NUT

(a) Remove the cotter pin and bearing lock nut cap.

(b) With the parking brake lever pulled, remove the bea–ring lock nut.

(c) Release the parking brake lever.

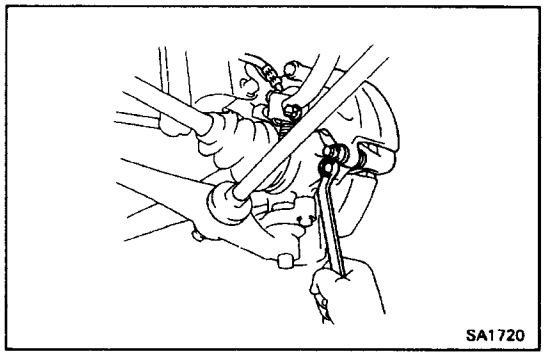

3. REMOVE BRAKE CALIPER

Remove the brake caliper from the rear axle carrier and suspend it with wire.

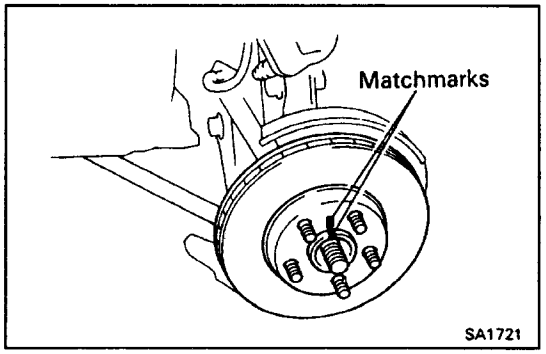

4. REMOVE ROTOR DISC

HINT: Before removing the rotor disc, place the rnat–chmarks on the axle shaft and rotor disc.

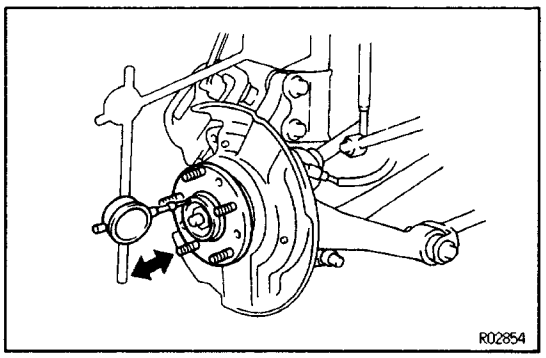

5. CHECK BEARING PLAY IN AXIAL DIRECTION

Bearing play:

0.05 mm (0.0020 in.) or less

HINT: Measure the bearing play when install the lock nut to the drive shaft.

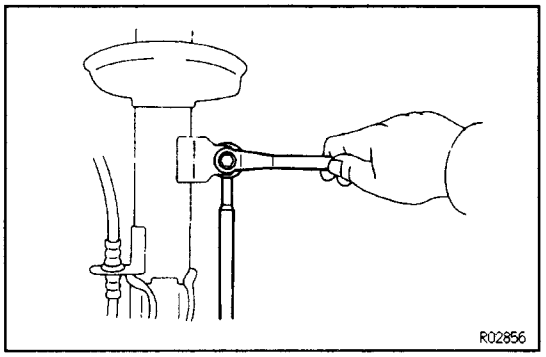

6. DISCONNECT STABILIZER LINK

Remove the nut and disconnect the stabilizer bar link.

HINT: If the ball joint stud turns together with the nut, use a hexagon wrench 5 mm (0.197 in.) to hold the stud.

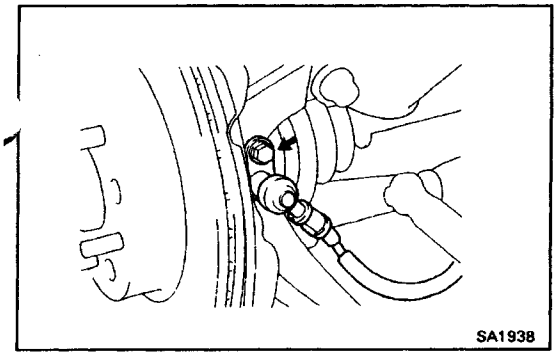

7. (w/ABS)

REMOVE SPEED SENSOR FROM AXLE CARRIER

Remove the bolt and pull out the speed sensor.

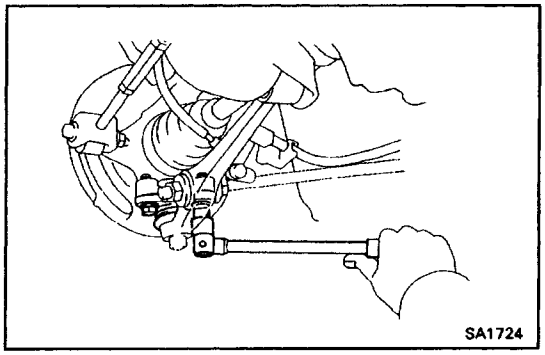

8. DISCONNECT BALL JOINT AND LOWER ARM

Remove the two bolts holding the ball joint to the rear axle carrier.

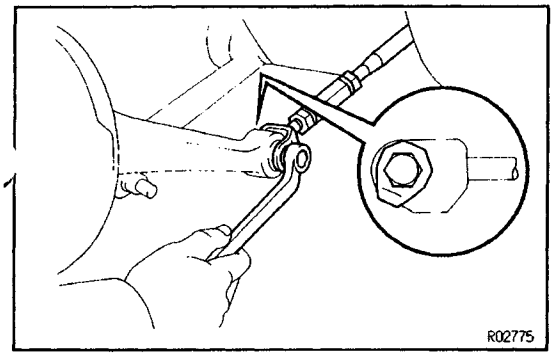

9. DISCONNECT SUSPENSION ARM

Remove the nut and bolt, then disconnect the sus–pension arm.

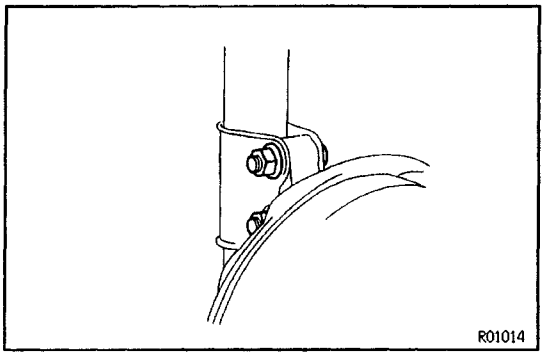

10. REMOVE REAR AXLE CARRIER WITH AXLE SHAFT

(a) Remove the nuts, washers and bolts.

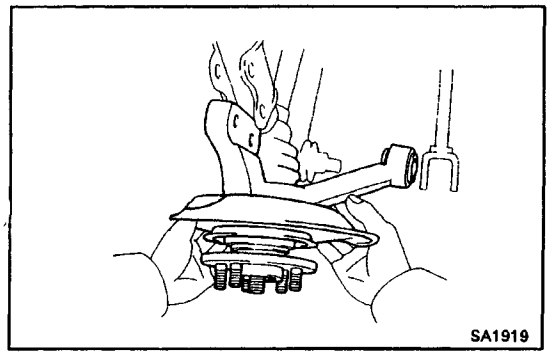

(b) Remove the rear axle carrier.

NOTICE: Cover the drive shaft boot with cloth to protect it from damage.

(w/ ABS)

NOTICE: Be careful not to damage the speed sensor rotor of the drive shaft.

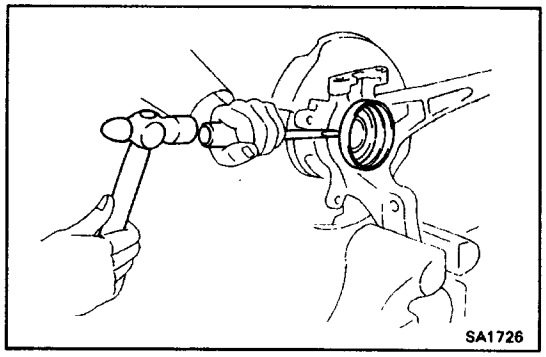

REAR AXLE SHAFT AND CARRIER DISASSEMBLY

SA0BZ–01

1. REMOVE DUST DEFLECTOR

(a) Clamp the rear axle carrier and carrier in a soft jaw vise.

(b) Using a screwdriver, remove the dust deflector.

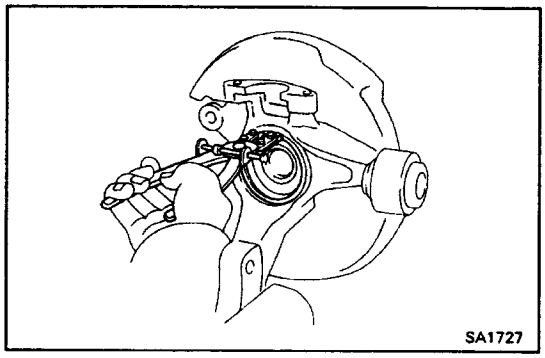

2. REMOVE HOLE SNAP RING

. Using snap ring pliers, remove the hole snap ring.

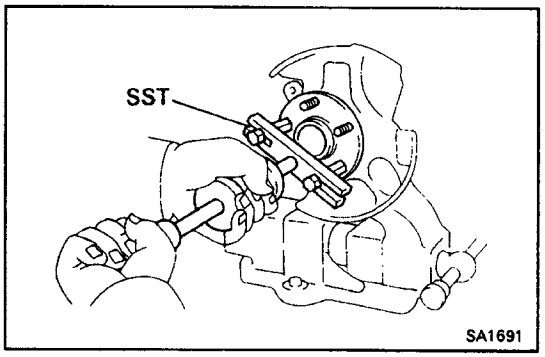

3. REMOVE AXLE SHAFT

Using SST, remove the axle shaft from the rear axle carrier.

SST 09520–00031

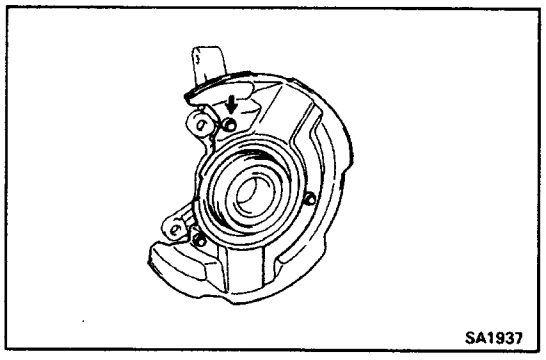

4. REMOVE DISC BRAKE DUST COVER

(a) Remove the three bolts holding the disc brake dust cover to the rear axle carrier.

(b) Remove the disc brake dust cover.

5. REMOVE BEARING INNER RACE (INSIDE)

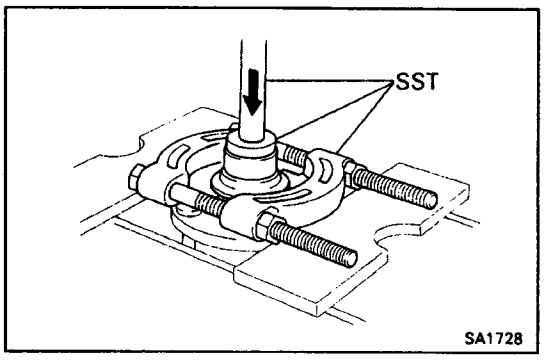

6. REMOVE BEARING INNER RACE (OUTSIDE)

Using SST, remove the inner race (outside) from the rear axle shaft.

SST 09608–20012 (09608–00040,09608–03020), 09950–00020

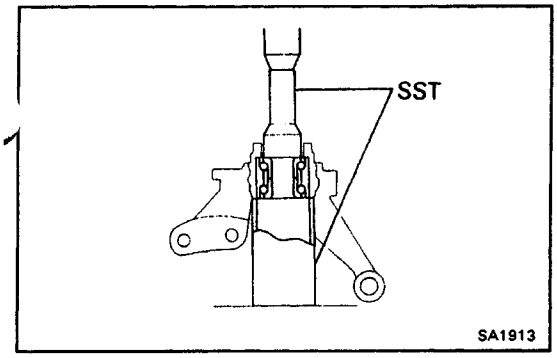

7. REMOVE AXLE BEARING

(a) First place the removed inner race (outside) in the bearing.

(b) Using SST and a press, press out the bearing.

SST 09310–35010. 09527–17010

NOTICE: Always replace the bearing as an assembly.

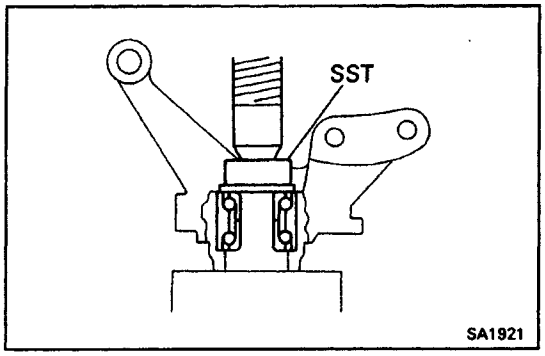

REAR AXLE SHAFT AND CARRIER ASSEMBLY

SA0C0–01

1. INSTALL AXLE BEARING

Using SST and a press, press a new bearing into the rear axle carrier.

SST 09710–22041(09710–02050)

NOTICE: Be careful not to damage the bearing.

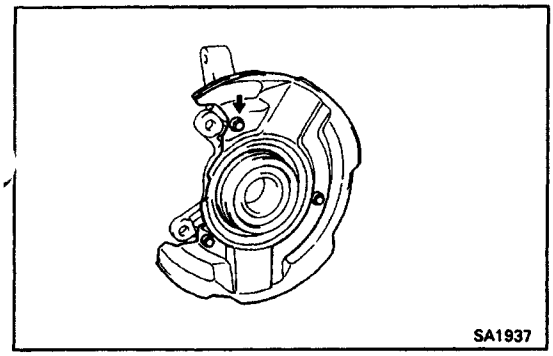

2. INSTALL DISC BRAKE DUST COVER

Install the disc brake dust cover with the three bolts.

Torque: 8.3 N–m (85 kgf–cm, 73 in.¿lbf)

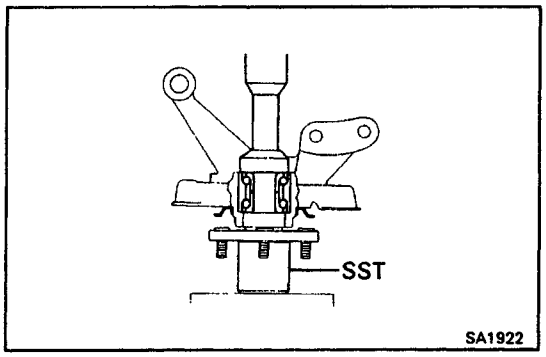

3. INSTALL AXLE SHAFT

Using SST and a press, press the shaft into the rear axle carrier.

SST 09310–35010, 09315–00021

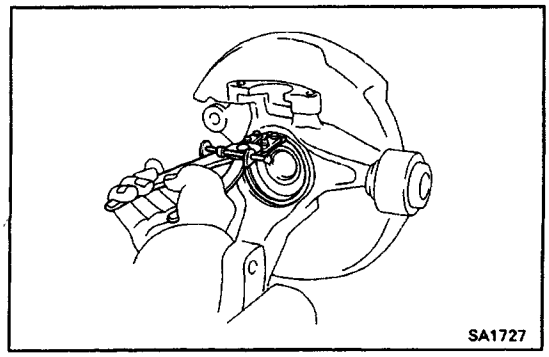

4. INSTALL HOLE SNAP RING

Using snap ring pliers, install a hole snap ring into the rear axle carrier.

NOTICE: Be careful not damage the bearing.

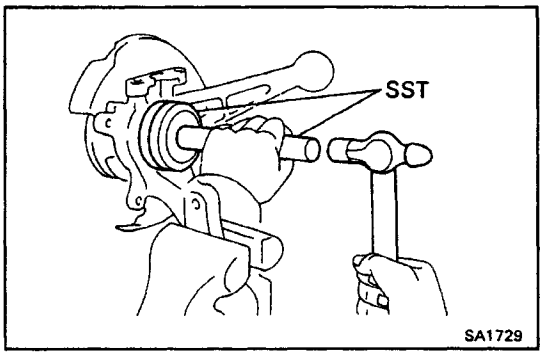

5. INSTALL DUST DEFLECTOR

Using SST and a hammer, drive in a new dust defle–ctor to the rear axle carrier.

SST 09316–60010 (09316–00010, 09316–00040)

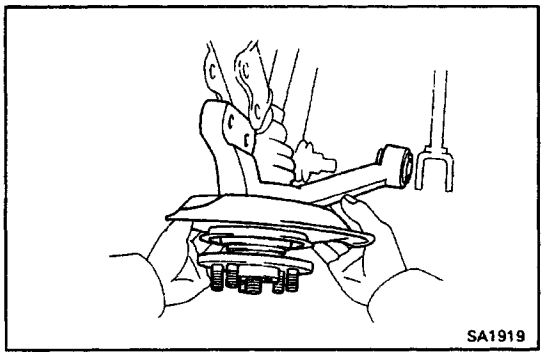

REAR AXLE SHAFT AND CARRIER INSTALLATION

SA0C1–01

1. INSTALL REAR AXLE CARRIER WITH AXLE SHAFT

(a) Place the rear axle carrier to the shock absorber lower bracket.

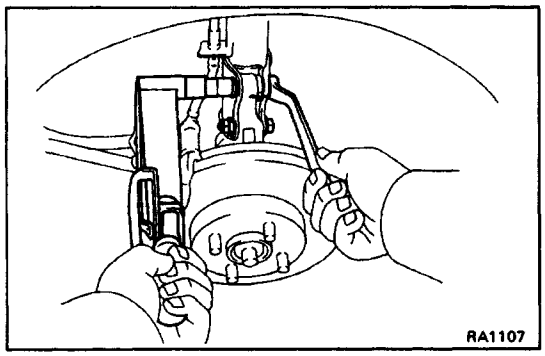

(b) Install the two set bolts, washers and nuts.

HINT: Install the bolts from the rear side.

(c) Torque the nuts.

Torque: 173 N–m (1,760 kgf–cm, 127 ft–lbf)

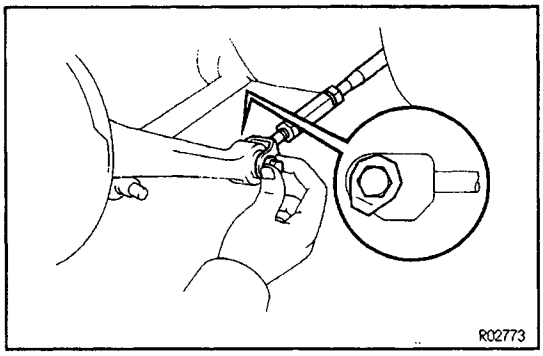

2. CONNECT SUSPENSION ARM

Install the suspension arm in place, then temporarily torque the bolt and nut.

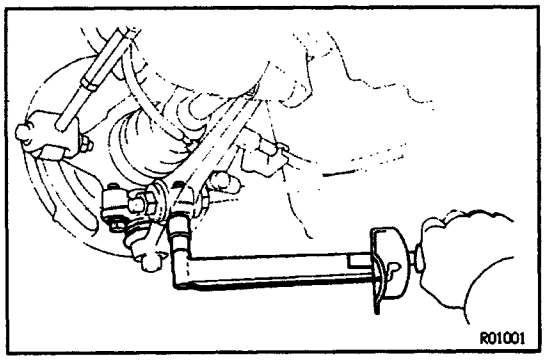

3. CONNECT REAR AXLE CARRIER TO LOWER ARM

Torque: 113 N–m (1,150 kgf–cm, 83 ft–lbf)

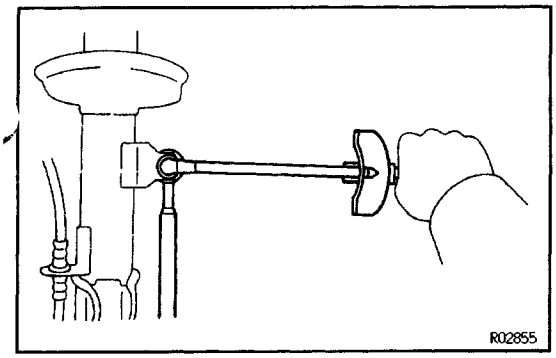

4. CONNECT STABILIZER LINK

Connect the stabilizer bar link with the nut.

Torque: 49 N–m (500 kgf–cm, 36 ft–lbf)

HINT:If the ball joint stud turns together with the nut, use a hexagon wrench 5 mm (0.197 in.) to hold the stud.

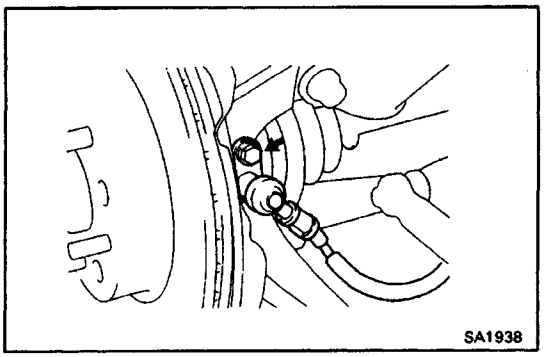

5. (w/ ABS)

INSTALL SPEED SENSOR TO AXLE CARRIER

HINT: Before installing, check that there is no ferric chip or foreign material on the sensor tip.

Torque: 7.8 N–m (80 kgf–cm. 69 in.–lbf)

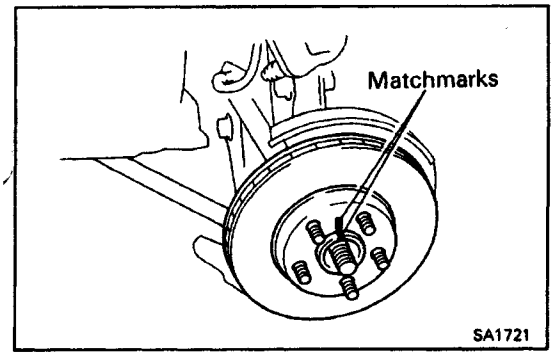

6. INSTALL ROTOR DISC

Align the matchmarks and install the rotor disc to the axle hub.

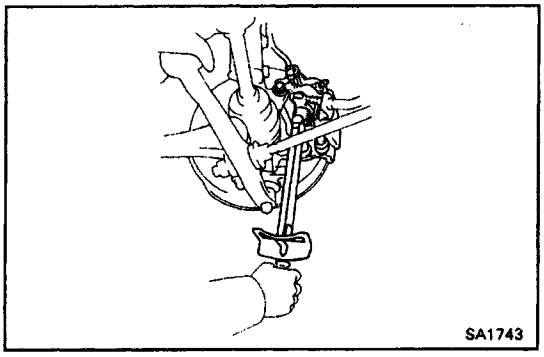

7. INSTALL BRAKE CALIPER

Install the brake caliper with the two bolts.

Torque: 59 N–m (600 kgf–cm, 43 ft–lbf)

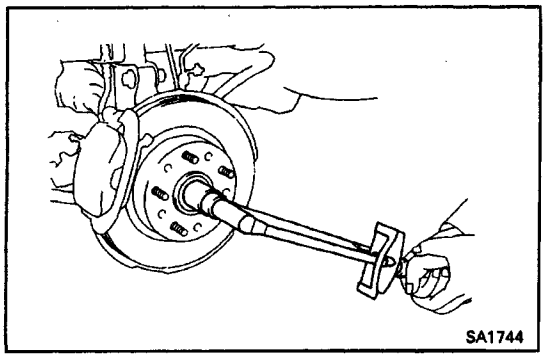

8. INSTALL BEARING LOCK NUT, BEARING LOCK NUT CAP AND NEW COTTER PIN

(a) Install the lock nut.

(b) With the parking brake engaged, and tighten the nut.

Torque:

5S–FE 226 N–m (2,300 kgf–cm, 166 ft–lbf)

3S–GTE 294 N–m (3,000 kgf–cm, 217 ft–lbf)

(c) Install the lock cap and a new cotter pin.

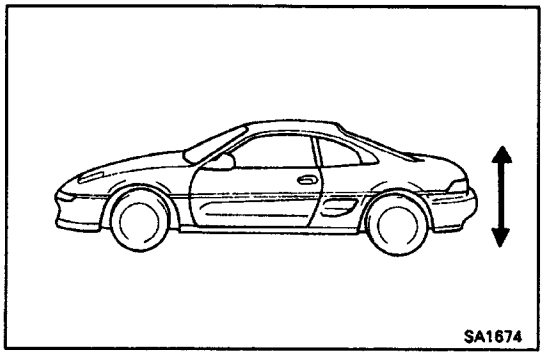

9. STABILIZE SUSPENSION

(a) Install the rear wheel and lower vehicle.

Torque: 103 N–m (1,050 kgf–cm, 76 ft–lbf)

(b) Bounce the vehicle up and down sever–al times to allow the suspension to settle.

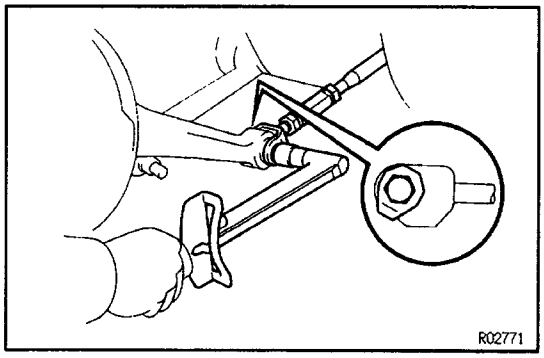

10. TIGHTEN BOLT AND NUT

Tighten the bolt and nut with the vehicle load applied onto the suspension.

Torque: 103 N–m (1,050 kgf–cm, 76 ft–lbf)

11. CHECK REAR WHEEL ALIGNMENT

(See page SA–3)

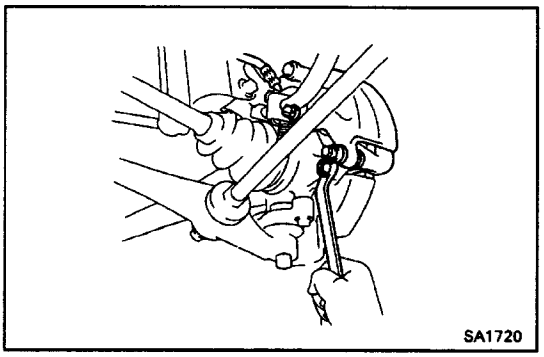

REAR AXLE SHAFT BOLT REPLACEMENT

1. JACK UP VEHICLE AND REMOVE REAR WHEEL

2. DISCONNECT BRAKE CALIPER FROM AXLE CAR–RIER

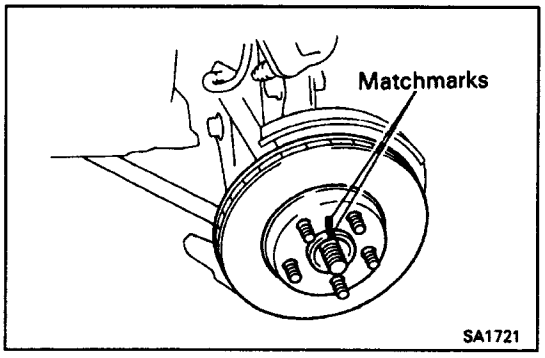

3. REMOVE ROTOR DISC

HINT: Before removing the rotor disc, place the mat–chmarks on the axle shaft and rotor disc.

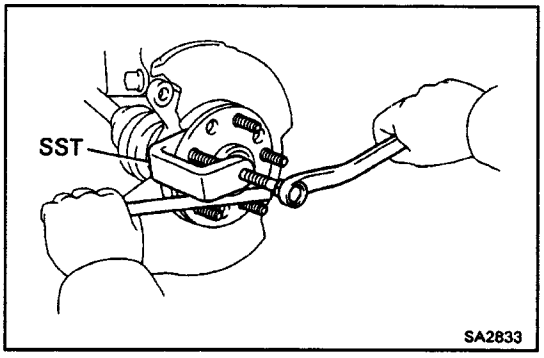

4. REMOVE REAR AXLE SHAFT BOLT

(a) Align the brake dust cover cut portion and axle shaft bolt.

(b) Using SST, remove the axle shaft bolt.

SST 09628–1001 1

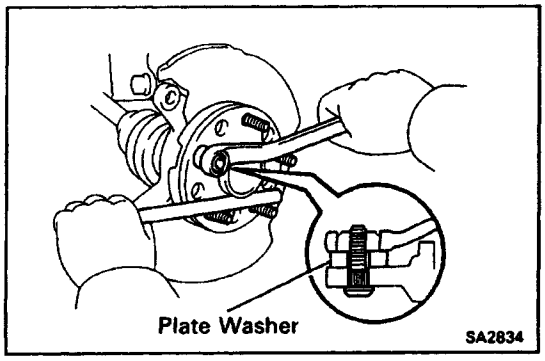

5. INSTALL REAR AXLE SHAFT BOLT

(a) Install a new bolt from the backing plate side.
(b) Install the suitable plate washer and nut.
(c) Tighten the nut, while holding the axle shaft.

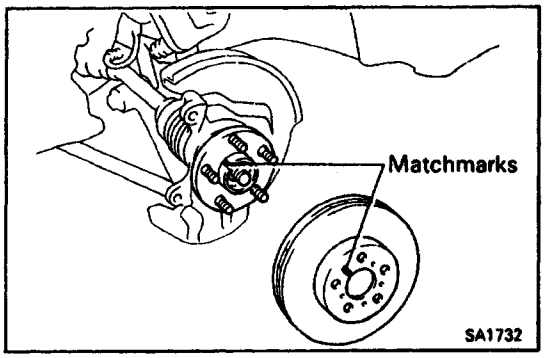

6. INSTALL ROTOR DISC

Align the matchmarks and install the rotor disc to the axle shaft.

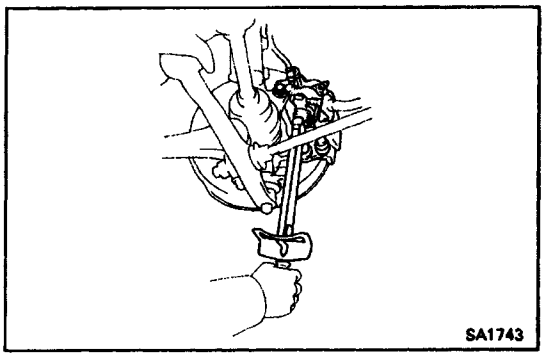

7. INSTALL DISC BRAKE CALIPER TO REAR AXLE CARRIER

Install and torque the two bolts.

Torque: 59 N–m (600 kgf–cm, 43 ft–lbf)

8. INSTALL REAR WHEEL AND LOWER VEHICLE

Torque: 103 N.m (1,050 kgf–cm, 76 ft–lbf)

REAR DRIVE SHAFT (3S–GTE)

DESCRIPTION

The drive shaft has a cross–groove type CVJ (Constant Velocity Joint) on the differential side and Rzeppa type CVJ on the wheel side.

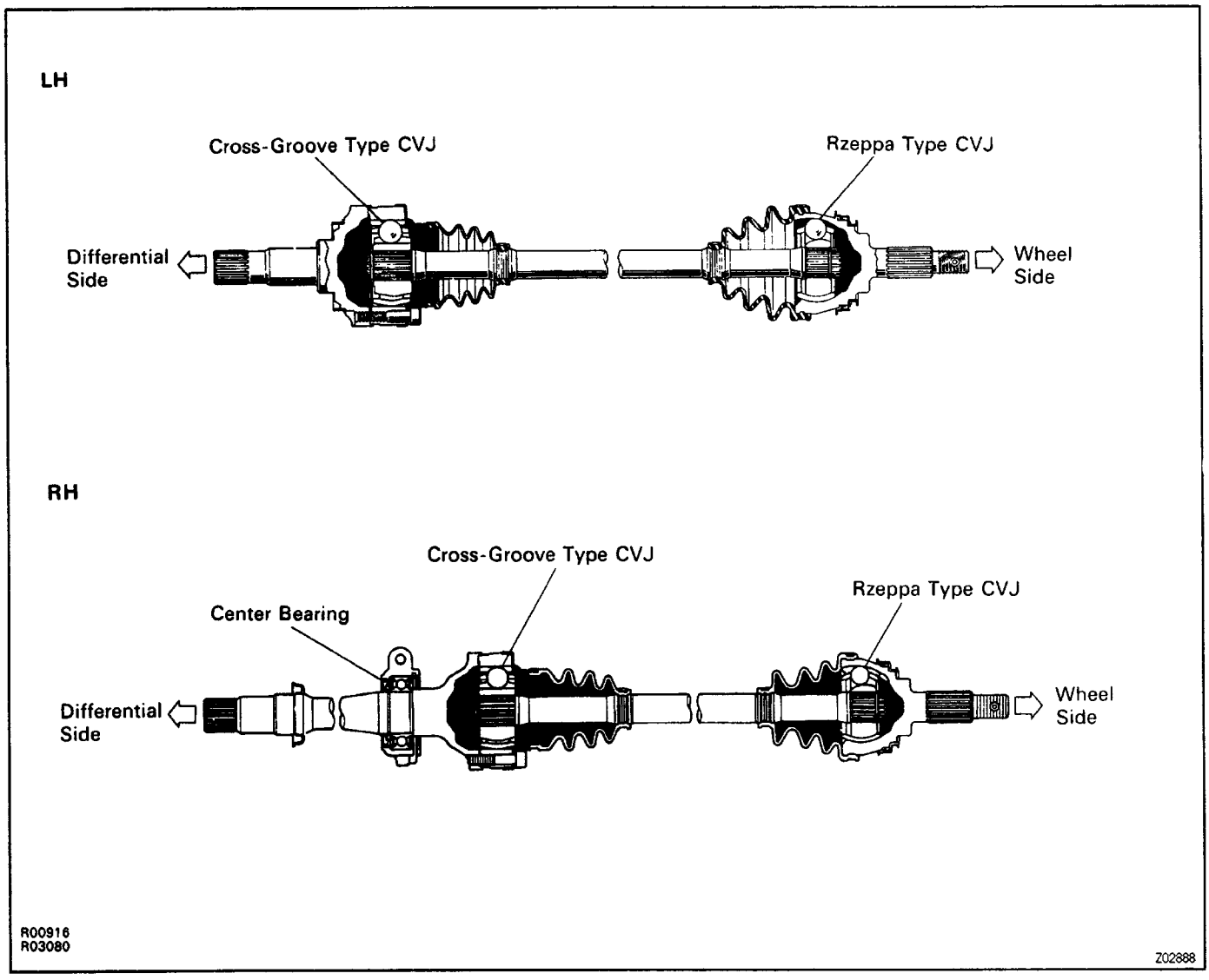

PREPARATION

SST (SPECIAL SERVICE TOOLS)

SA0CF–01

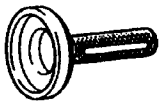	09223–15010 Crankshaft Rear Oil Seal Replacer	
	09308–00010, Oil Seal Puller	
	09318–60010 Transmission & Transfer Bearing Replacer	
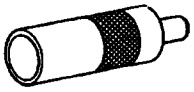	(09316–00010) Replacer Pipe	
	09570–22011 Differential Mounting Cushion Remover & Replacer	
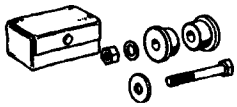	09608–16041 Front Hub Bearing Adjusting Tool	
	(09608–02010) Cover	
	09726–10010 Lower Suspension Arm Bushing Remover & Replacer	
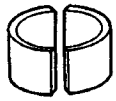	(09726–00030) Spacer	Drive shaft inboard joint
	09923–00020 Hexagon 8 mm Wrench	
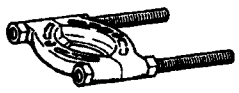	09950–00020 Bearing Remover	Center drive shaft dust cover

SA0CG–01

RECOMMENDED TOOLS

	09905–00012 Snap Ring No. 1 Expander	For removing and installing snap ring

SA0CH–01

EQUIPMENT

Torque wrench	

SA0CJ–01

LUBRICANT

Item	Capacity	Classification
Outboard joint grease Inboard joint grease Side gear shaft grease	120–130 g (0.26–0.29 lb) 90–100 g (0.20–0.22 lb) 43–53 g (0.09–0.12 lb)	

SA0CK–01

SSM (SPECIAL SERVICE MATERIALS)

08826–00801	Seal Packing 1121, Three bond 1121, or equivalent	Drive shaft inboard joint cover

REAR DRIVE–SHAFT

SA0CL–01

COMPONENT

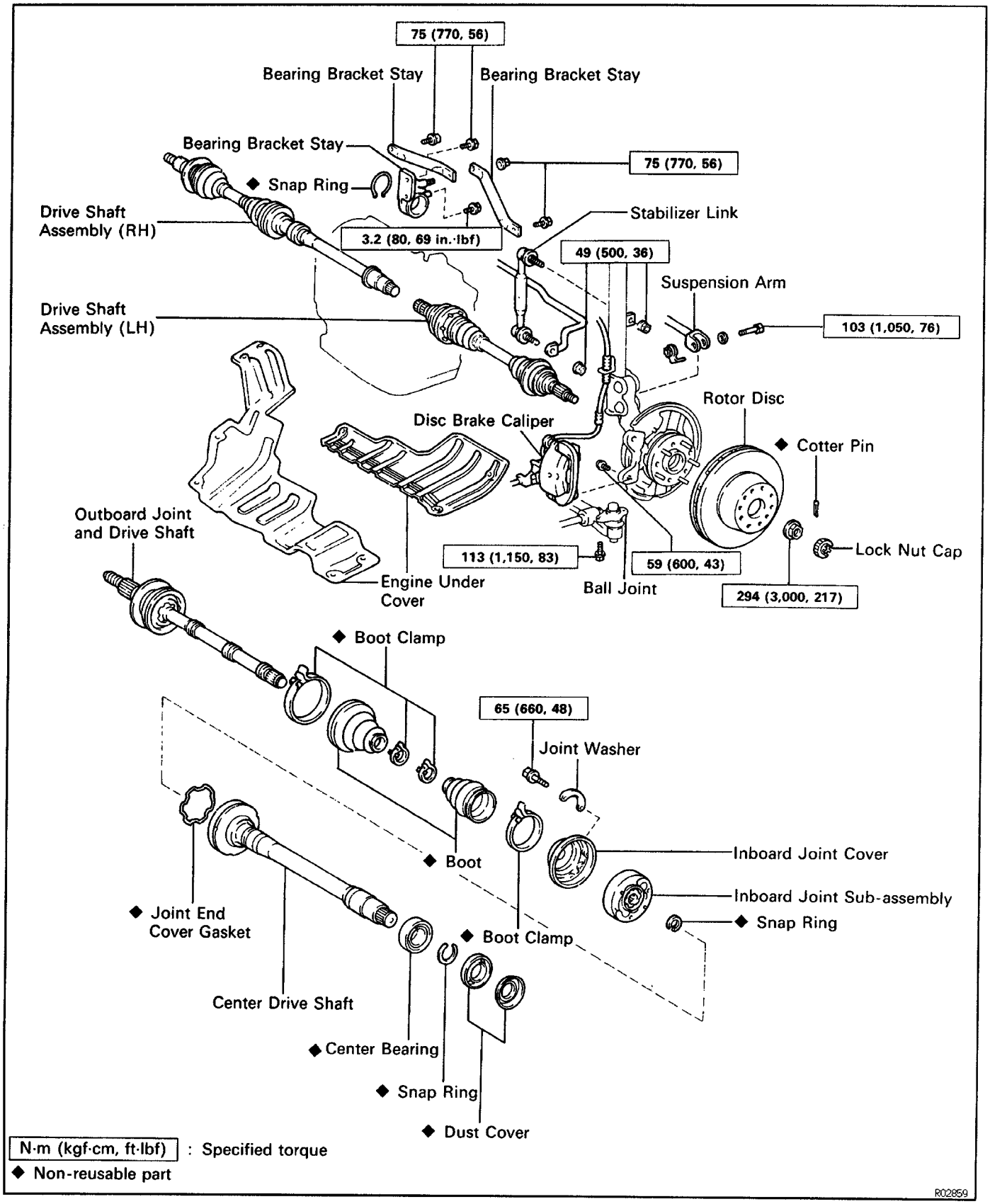

SA0CM – 01

REAR DRIVE SHAFT REMOVAL

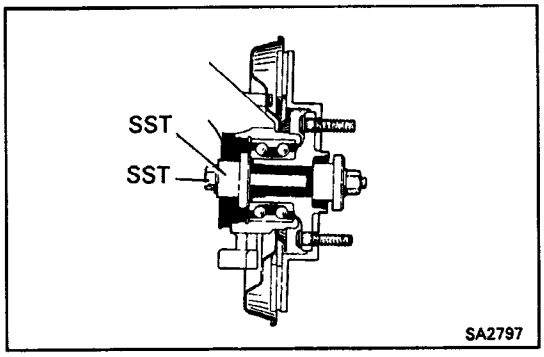

NOTICE:

- **The axle bearing could be damaged if it is subjected to the vehicle weight, such as when moving the vehicle with the drive shaft removed. Therefore, if it is absolutely necessary to place the vehicle weight on the axle bearing, first support it with SST.**

SST 09570–22010, 09608–16041 (09608–02010)

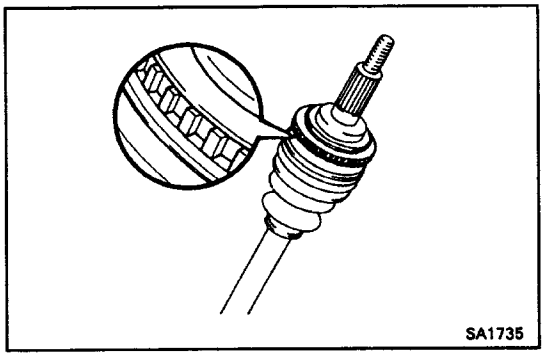

- **(w/ ABS)**
  After disconnecting the drive shaft from the axle hub, work carefully so as not to damage the sensor rotor serrations on the drive shaft.

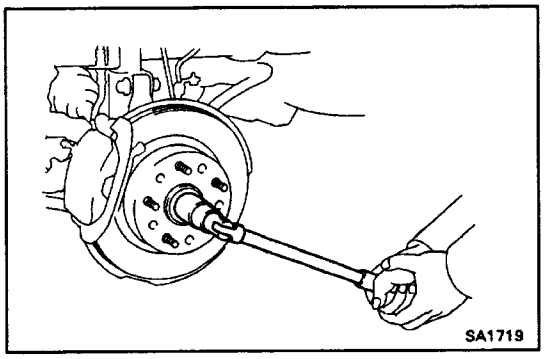

1. JACK UP VEHICLE AND REMOVE REAR WHEEL
2. REMOVE ENGINE UNDER COVER
3. DRAIN TRANSAXLE OIL
4. REMOVE COTTER PIN, LUCK NUT CAP AND BEA–RING LOCK NUT

(a) Remove the cotter pin and lock nut cap.
(b) With the parking brake engaged, remove the bearing lock nut.

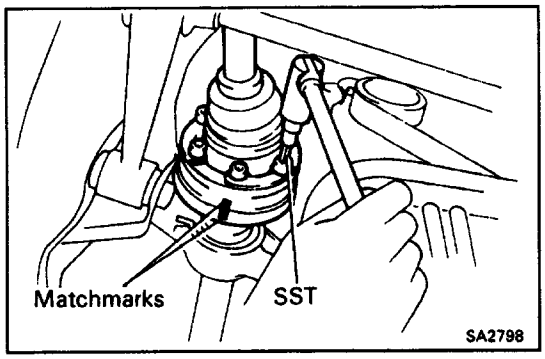

5. LOOSEN SIX BOLTS HOLDING DRIVE SHAFT TO DIFFERENTIAL SIDE GEAR SHAFT OR CENTER DRIVE SHAFT

(a) Place the rnatchmarks on the drive shaft and side gear shaft.
NOTICE: Do not punch the marks.
Use paint, etc.
(b) With the parking brake engaged, using SST, loosen the six hexagon bolts.
SST 09923–00020

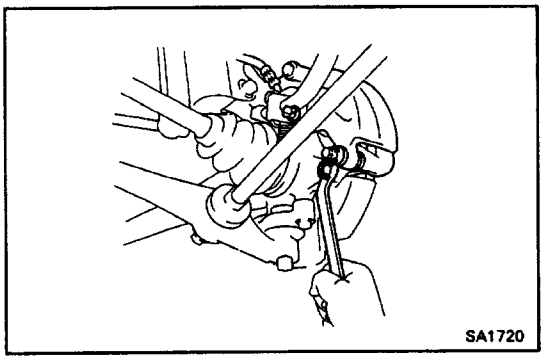

HINT: Do not remove the bolts, finger tighten them not to drop down the drive shaft.

6. REMOVE BRAKE CALIPER

Remove the brake caliper from the axle carrier anc suspend it with wire.

7. REMOVE ROTOR DISC

HINT: Before removing the rotor disc, place match–marks on the axle shaft and rotor disc.

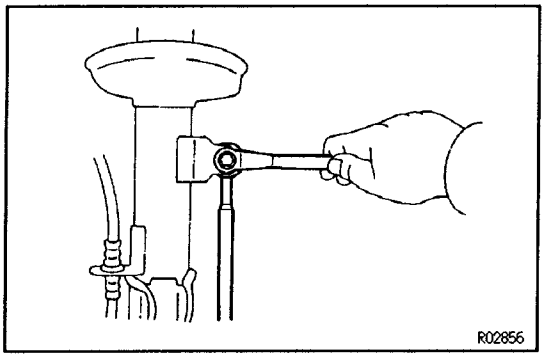

8. DISCONNECT STABILIZER LINK

Remove the nut and disconnect the stabilizer links.

HINT: If the ball joint stud turns together with the nut, use a hexagon wrench 5 mm (0.197 in.) to hold the stud.

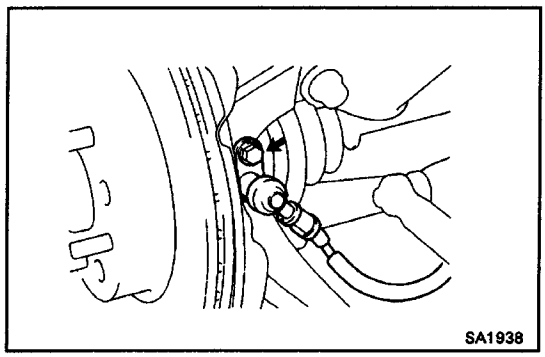

9. (w/ ABS)
REMOVE SPEED SENSOR FROM AXLE CARRIER

Remove the bolt and pull out the speed sensor.

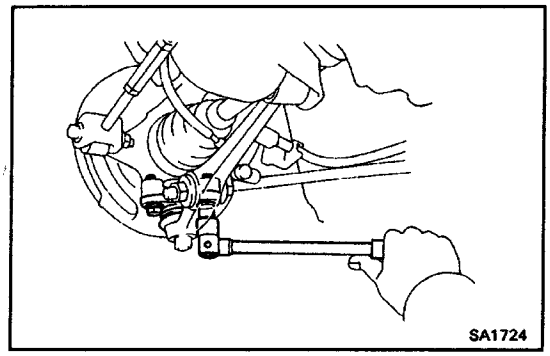

10. DISCONNECT LOWER ARM FROM REAR AXLE CARRIER

(a) Remove the two bolts holding the ball joint to the lower arm.

(b) Disconnect the lower arm.

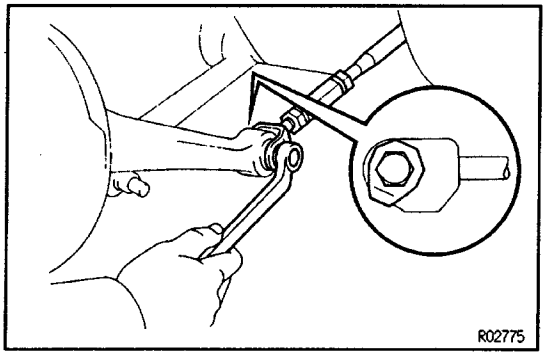

11. DISCONNECT SUSPENSION ARM

(a) Remove the suspension arm mounting nut and bolt, disconnect the suspension arm from the rear axle carrier.

(b) Similarly disconnect the other side.

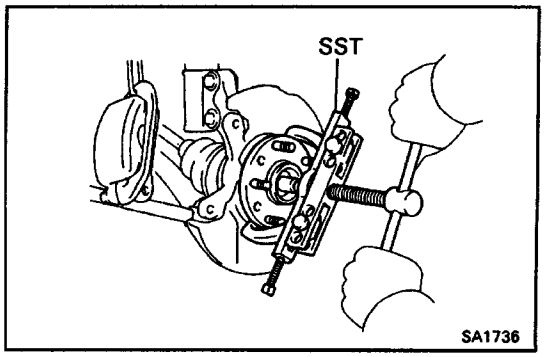

12. DISCONNECT DRIVE SHAFT FROM AXLE CARRIER

Using SST, disconnect the drive. shaft from the axle carrier.

SST 09950–20017

NOTICE:

- **Cover the drive shaft boot with cloth to protect it from damage.**

- **(w/ ABS)**
- **Be careful not to damage the sensor rotor of the drive shaft.**

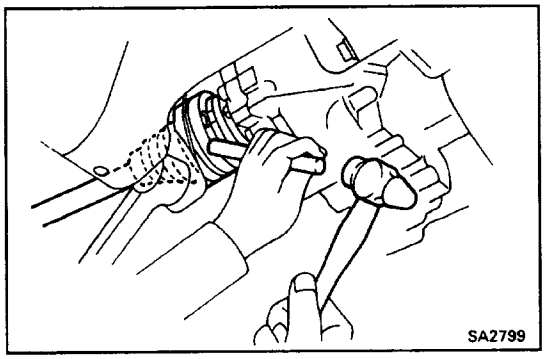

13. REMOVE LH DRIVE SHAFT

Using a hammer and brass bar, drive out the drive shaft from the transaxle.

NOTICE:

- **Be careful not to damage the side gear shaft.**
- **Be careful not to damage the differential side oil seal.**

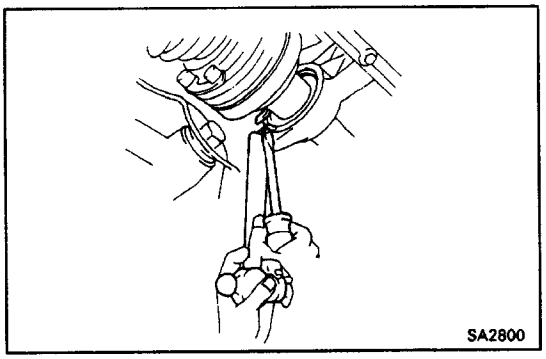

14. REMOVE RH DRIVE SHAFT

(a) Using a hammer and screwdriver, remove the snap ring from the bearing bracket.

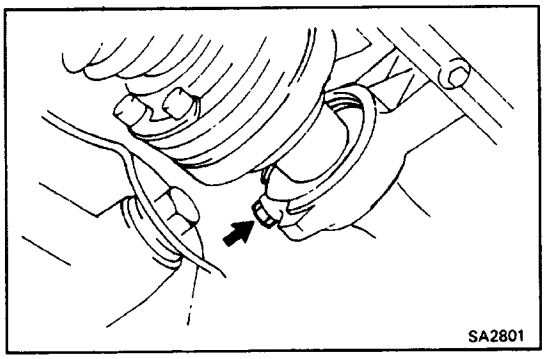

(b) Remove the bolt from the bearing bracket.

(c) Remove the RH drive shaft with center drive shaft.

NOTICE: Be careful not to damage the differential side oil seal.

HINT: If it is hard to remove the bearing, use a bras: bar and hammer and the drive flange end of the drive shaft.

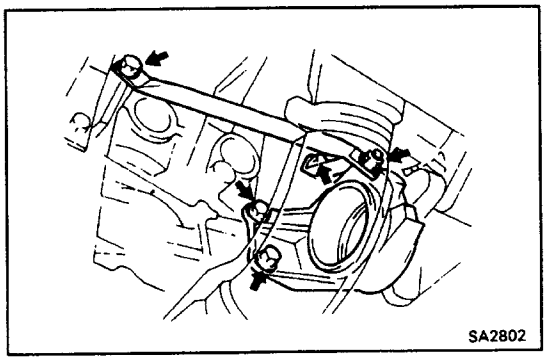

15. REMOVE DRIVE SHAFT BEARING BRACKET ANC BEARING BRACKET STAY

(a) Remove the nut, two bolts and the two bearing bra cket stays from the bearing bracket and engine.

(b) Remove the two bolts and the bearing bracket fron the engine.

SA0CN–01

OIL SEAL REPLACEMENT

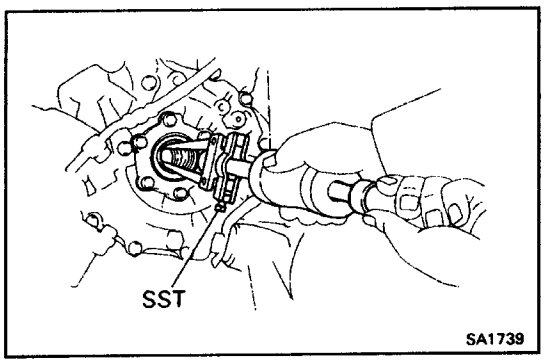

1. REMOVE OIL SEALS

Using SST, drive out the oil seals.
SST 09308–00010

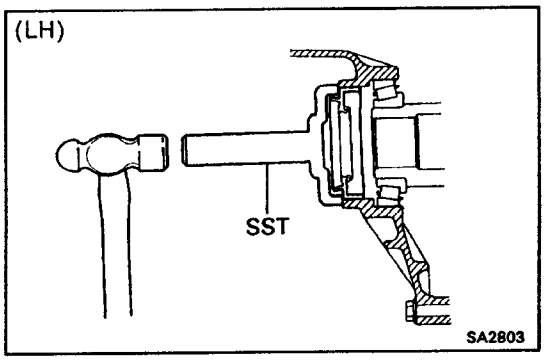

2. INSTALL NEW OIL SEAL

(a) (L H)

Using SST and hammer, tap in a new LH oil seal.
SST 09223–15010

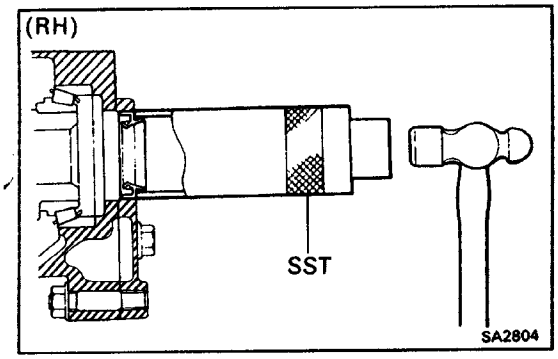

(b) (R H)

Using SST and hammer, tap in a new RH oil seal.
SST 09316–60010 (09316–00010)

SA0CP–01

REAR DRIVE SHAFT DISASSEMBLY

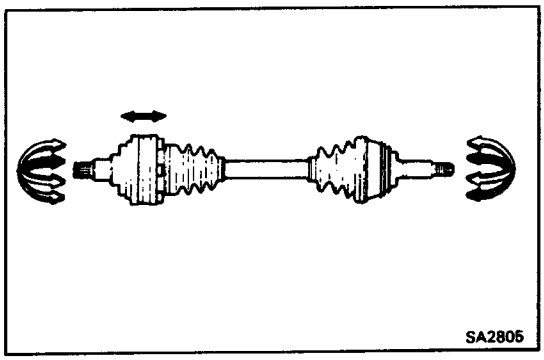

1. CHECK DRIVE SHAFT

(a) Check to see that there is no play in the outboard joint.
(b) Check to see that the inboard joint slides smoothly in the thrust direction.
(c) Check to see that there is no remarkable play in the radial direction of the inboard joint.
(d) Check for damage to boots.

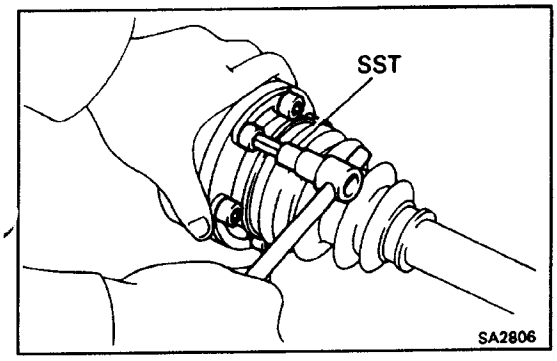

2. DISCONNECT SIDE GEAR SHAFT

(a) Using SST, remove the six hexagon bolts and the three washers.
SST 09923–00020
(b) Disconnect the side gear shaft from the drive shaft.

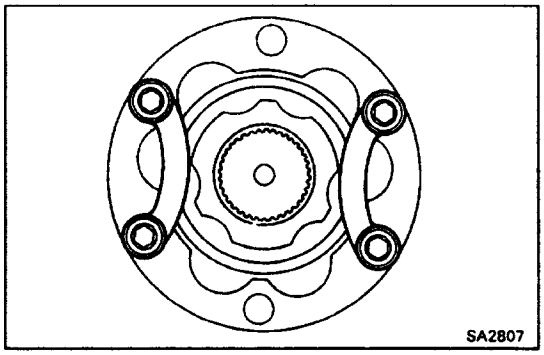

(c) Use bolts, nuts and washers to keep the inboard joint together.

NOTICE: Tighten the bolts by hand to avoid scratching the flange surface.

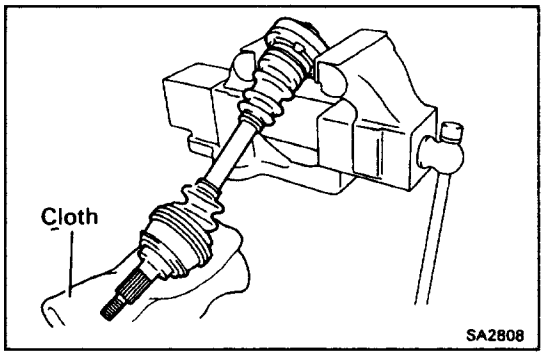

3. REMOVE INBOARD JOINT AND BOOT CLAMPS

(a) Mount the inboard joint sub–assembly in a vise.

HINT:

- Use a set of soft jaws in the vise to protect the inboard joint sub–assembly.
- Cover the outboard joint side dust cover with cloth to protect in from damage.

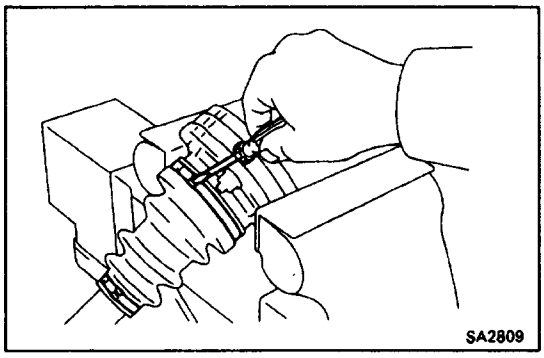

(b) Using a screwdriver, remove the two inboard joint boot clamps.

(c) Remove the inboard joint boot from the inboard joint cover.

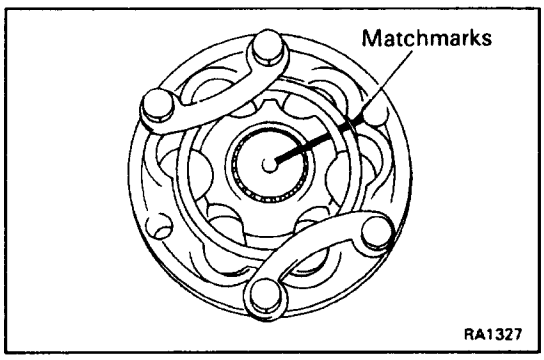

4. DISASSEMBLE INBOARD JOINT

(a) Place matchmarks on the inboard joint and drive shaft.

NOTICE: Do not punch marks.

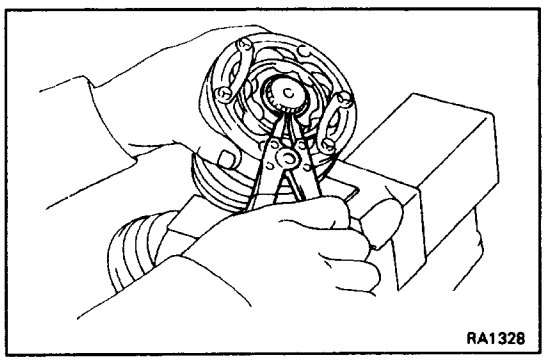

(b) Using a snap ring expander, remove the snap ring.

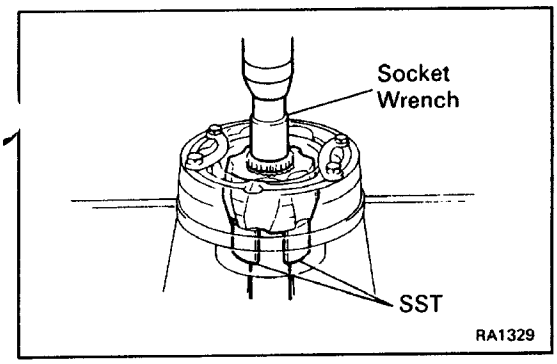

(c) Using SST, a socket wrench and a press, remove the inboard joint from the drive shaft.
SST 09726–10010 (09726–00030)
(d) Remove the bolts, nuts and washers from the inboard joint.

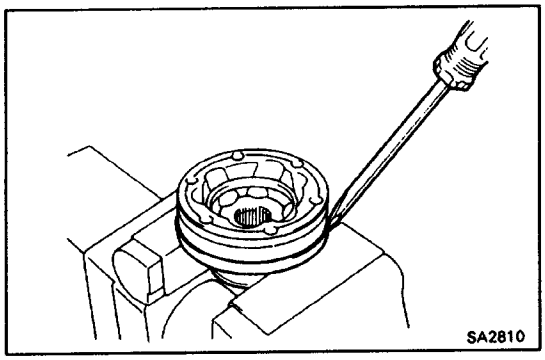

(e) Using a screwdriver, unstake the inboard joint cover.
(f) Using a screwdriver, pry out the inboard joint from the inboard joint cover.

NOTICE: When lifting the inboard joint, hold onto the inner race and outer race.

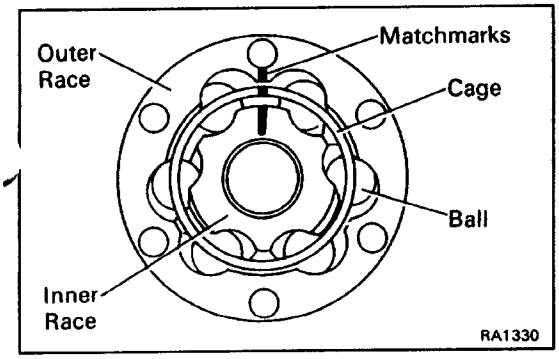

HINT: Should the joint become disassembled, reassemble it in the way shown.

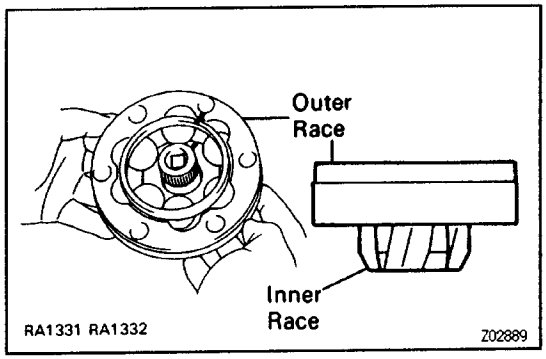

SERVICE HINT

(a) Align the matchmarks place before disassembly.
(b) Insert the spark plug wrench into the inner race.
(c) Lift the outer race and cage, and insert the six balls.

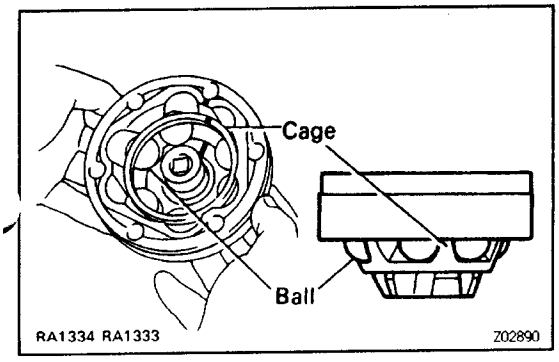

(d) Jiggle the outer race and cage as shown to place the balls in their respective grooves.
(e) Lower the outer race and cage so that fit tightly with the inner race.

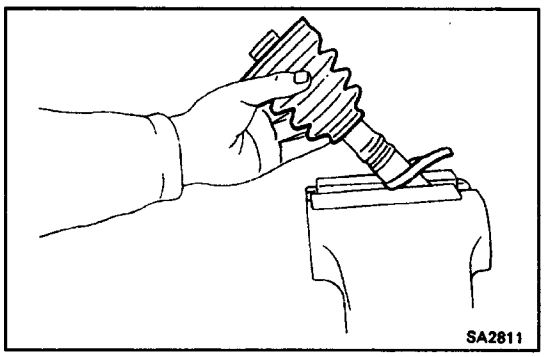

5. REMOVE BOOTS

Remove boots of the inboard joint and outboard joint.

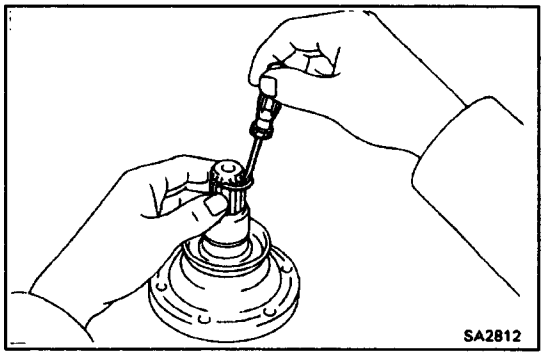

6. REPLACE SIDE GEAR SHAFT SNAP RING

(a) Using a screwdriver, pry out the snap ring.
(b) Using a snap ring expander, install a new snap ring.

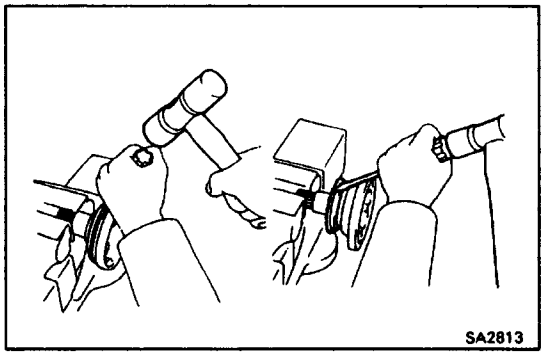

7. REMOVE DUST COVER FROM SIDE GEAR SHAFT

Using a screwdriver and hammer, tap out the dust cover.

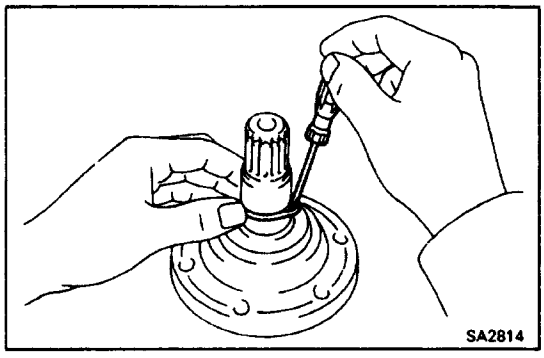

8. REPLACE SIDE GEAR SHAFT O–RING

(a) Using a screwdriver, remove the O–ring.

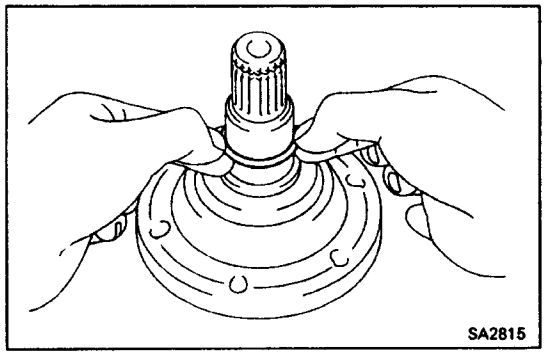

(b) Coat O–ring with MP grease.
(c) Install a new 0–ring.

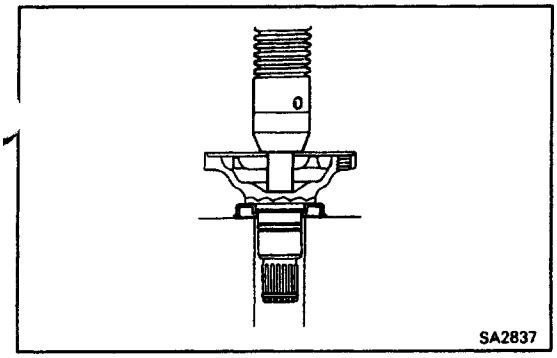

9. INSTALL DUST COVER TO SIDE GEAR SHAFT

Using a press, install a new dust cover.

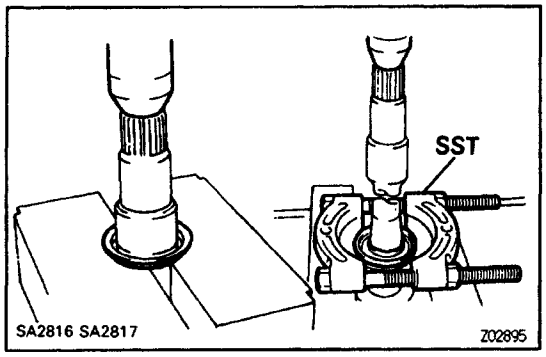

10. REMOVE DUST COVER FROM CENTER DRIVE SHAFT

Using SST and press, remove the dust cover from the inboard joint.

SST 09950–00020

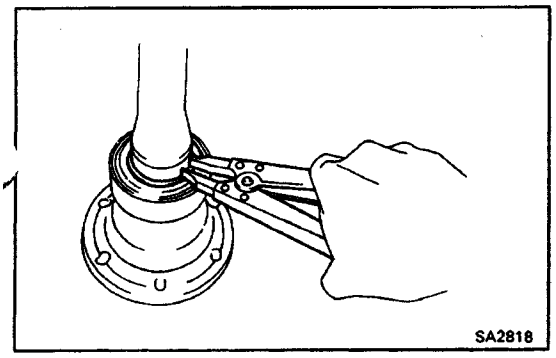

11. REMOVE BEARING FROM CENTER DRIVE SHAFT

(a) Using a snap ring expander, remove the snap ring from the inboard joint.

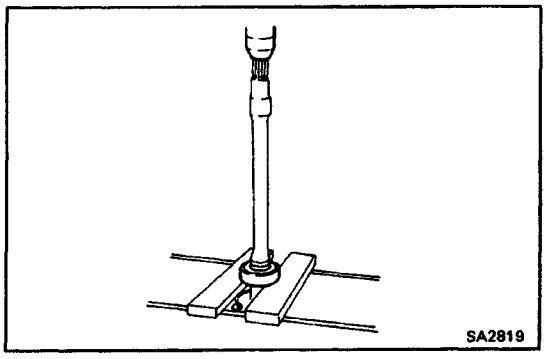

(b) Using a press, press out the bearing from the inboard joint.

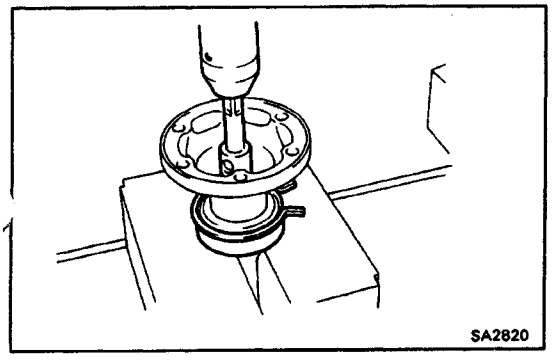

12. INSTALL BEARING TO CENTER DRIVE SHAFT

(a) Install a new snap ring to the center drive shaft.

(b) Using a press and extension bar, press in a new bearing.

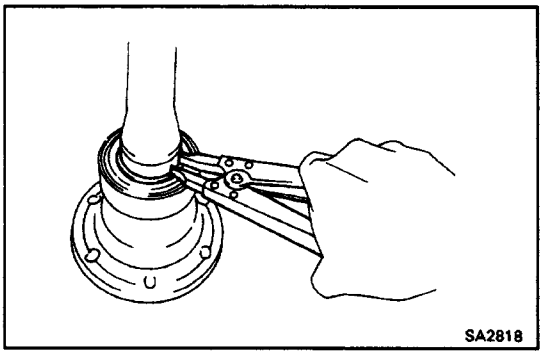

(c) Using a snap ring expander, install a new snap ring.

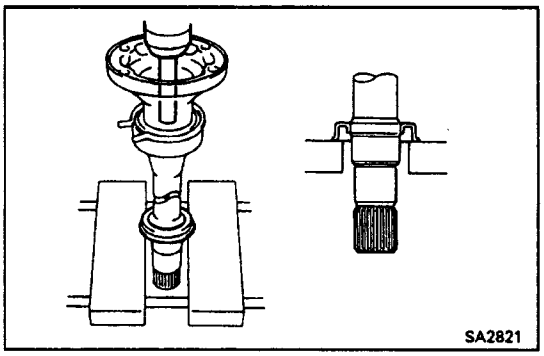

13. INSTALL DUST COVER TO CENTER DRIVE SHAFT
Using a press, press in a new dust cover to the inboard joint.

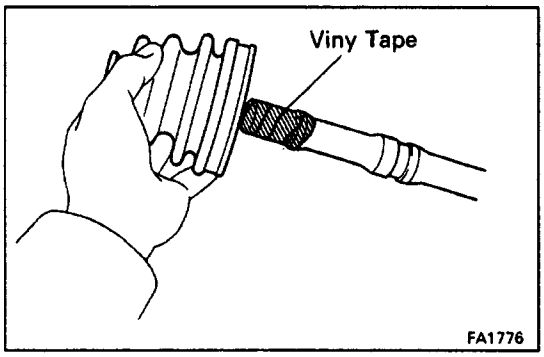

SA0CQ–01

REAR DRIVE SHAFT ASSEMBLY

1. TEMPORARILY INSTALL NEW BOOTS AND NEW BOOT CLAMP

HINT: Before installing the boot, wrap vinyl tape around the spline of the shaft to prevent damaging the boot.

NOTICE: The boot and clamp of the outboard joint are smaller than those of the inboard joint. Temporarily install the two boots and four new clamps to the outboard joint and inboard joint.

2. INSTALL BOOT TO OUTBOARD JOINT

(a) Before assembling the boots, pack in grease.

HINT: Use the grease supplied in the boot kit.

Grease capacity:
120–130 g (0.26–0.29 lb)
Grease color:
Black

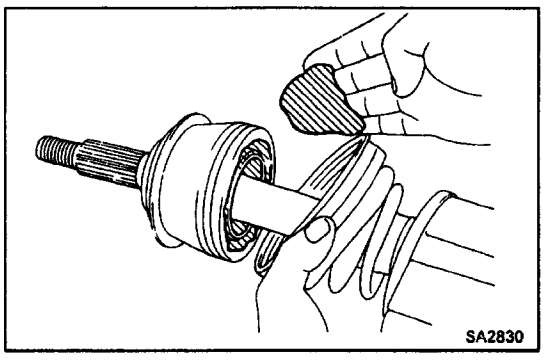

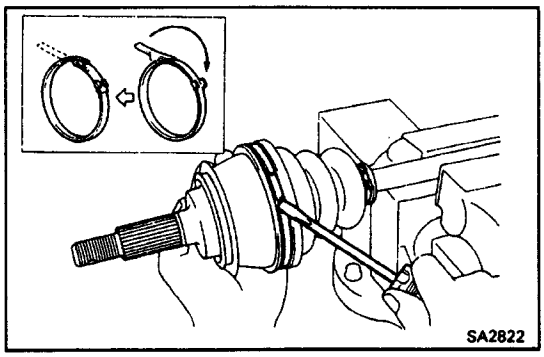

(b) Install a new two boot clamps to the outboard joint boot.

(c) Bend the boot clamp and lock it as shown.

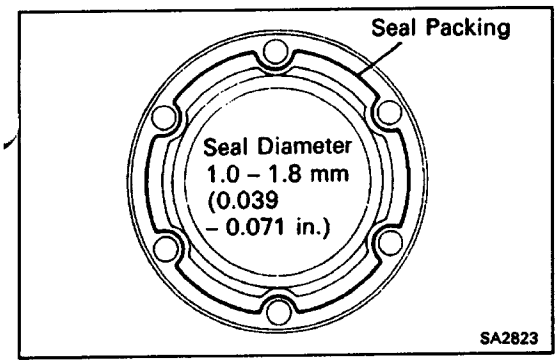

3. INSTALL INBOARD JOINT COVER

(a) Clean contacting surfaces of any residual packing material using gasoline or alcohol.

(b) Apply seal packing to the inboard joint cover as shown.

Seal packing:

Part No. 08826–00801, THREE BOND 1121 or equivalent

HINT: Avoid applying an excess amount to the sur–face.

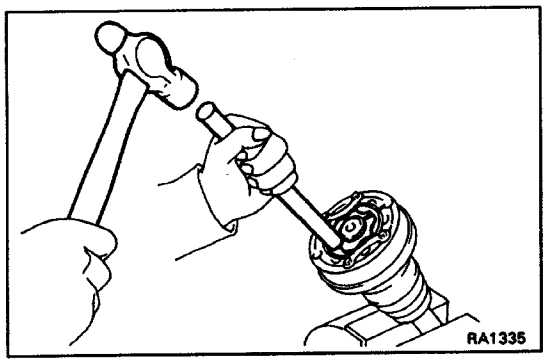

(c) Align the bolt holes of the cover with those of the inboard joint, then insert the hexagon bolts.

(d) Using a hammer and brass bar, tap the rim of the inboard joint cover into place.

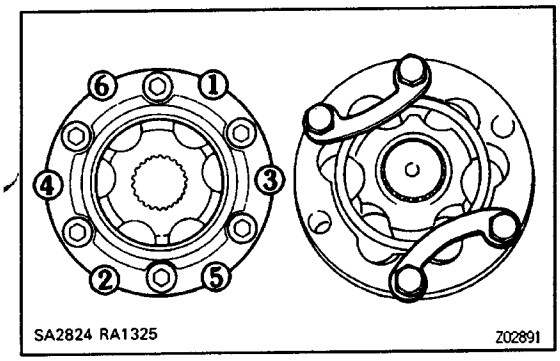

(e) Do this in the order shown, and repeat several time.

(f) Use bolts, nuts and washers to keep the inboard joint together.

NOTICE: Tighten the bolts by hand to avoid scratching the flange surface.

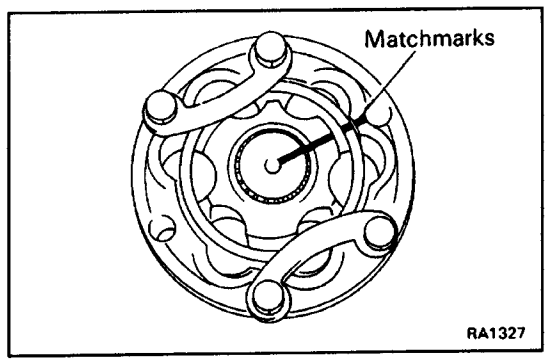

4. ASSEMBLE INBOARD JOINT

(a) Align the matchmarks placed before disassembly.

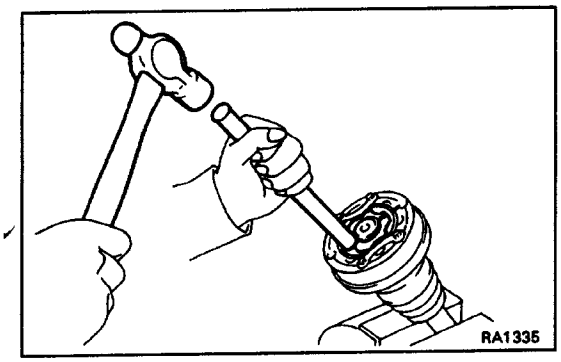

(b) Using a brass bar and hammer, tap the inboard joint onto the drive shaft.

NOTICE: Make sure that the brass bar is touching the inner race, and not the cage.

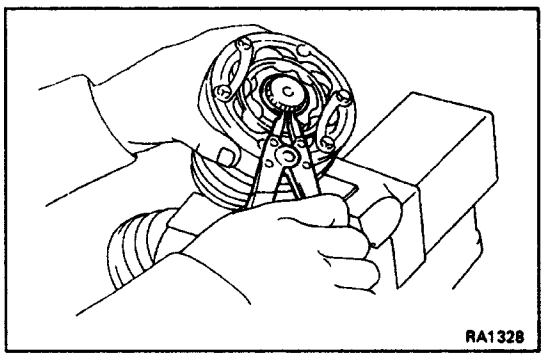

(c) Using a snap ring expander, install a new snap ring.

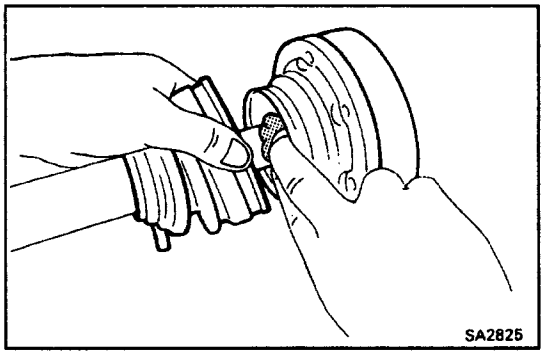

(d) Pack in grease to the inboard tulip and boot.
HINT: Use the grease supplied in the boot kit.
Grease capacity:
90–100 g (0.20–0.22 lb)
Grease color:
Black

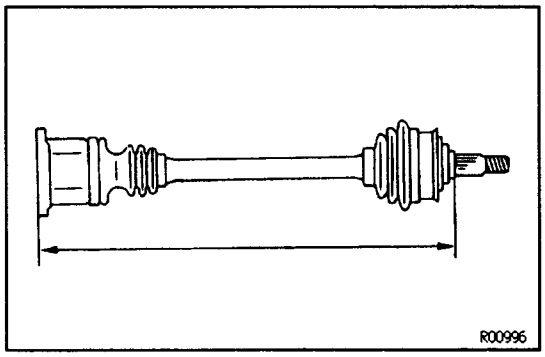

(e) Be sure the boot is on the shaft groove.
(f) Insure that the boot is no stretched or contracted when the drive shaft is at standard length.
Drive shaft length:
389.7±5.0 mm (15.343±0.197 in.)

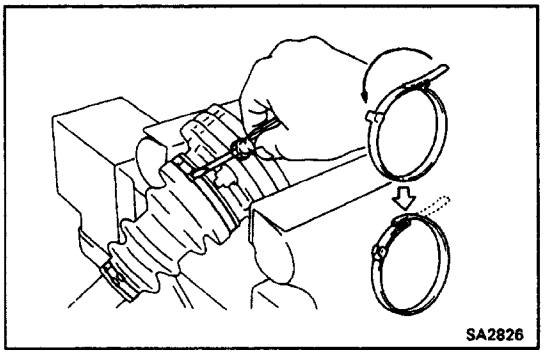

(g) Bend the boot clamp and lock it as shown.

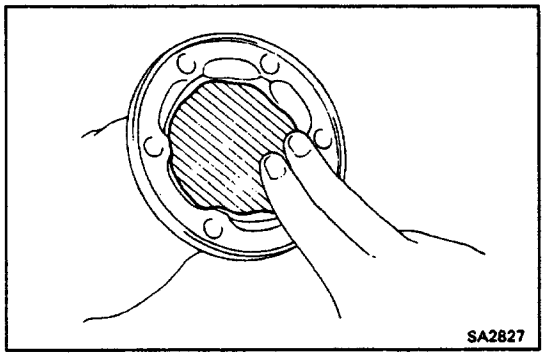

5. INSTALL SIDE GEAR SHAFT
(a) Pack in grease to the side gear shaft.
HINT: Use the grease supplied in the boot kit.
Grease capacity:
43–53 g (0.09–0.12 lb)
Grease color:
Black
(b) Remove the two washers and four bolts from the drive shaft.

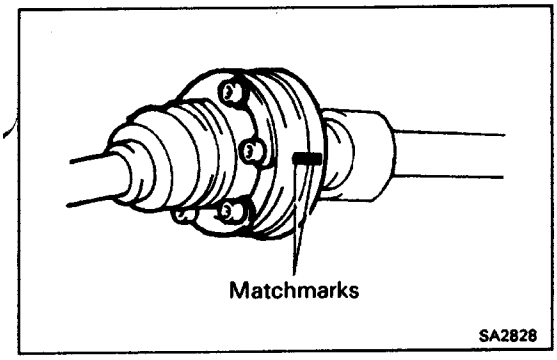

(c) Align the matchmarks placed before remove, and install the side gear shaft or center drive shaft and a new gasket to the inboard joint sub–assembly.

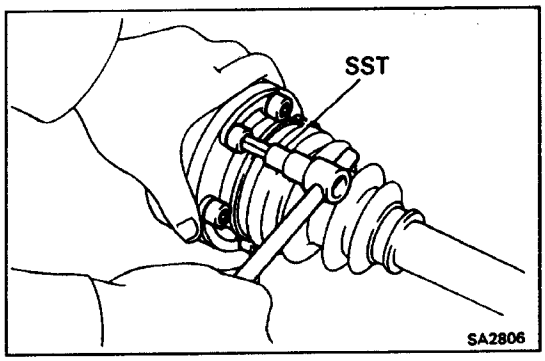

(d) Using SST, temporarily tighten the six hexagon bolts with three washers.
SST 09923–00020

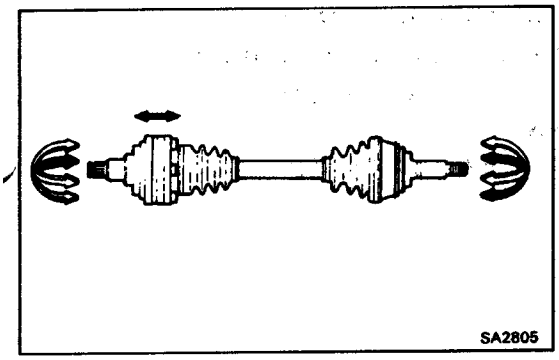

6. CHECK DRIVE SHAFT

(a) Check to see that the there is no play in the inboard joint and outboard joint.

(b) Check to see that the inboard slide smoothly in the thrust direction.

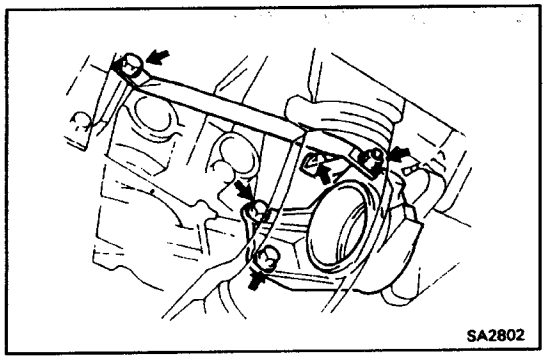

REAR DRIVE SHAFT INSTALLATION

SA0CR–01

1. INSTALL DRIVE SHAFT BEARING BRACKET AND BEARING BRACKET STAY

(a) Install the bearing bracket to the engine with the two bolts.
Torque: 64 N–m (650 kgf–cm, 47 ft–lbf)

(b) Install the two bearing bracket stays to the engine and bearing bracket with the two bolts and the nut.
Torque:
Bolt 75 N–m (770 kgf–cm, 56 ft–lbf)
Nut 75 N–m (770 kgf–cm, 56 ft–lbf)

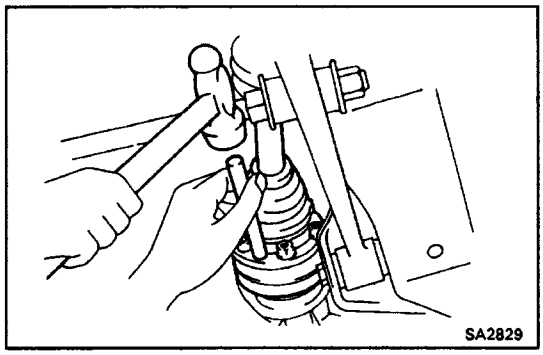

2. INSTALL LH DRIVE SHAFT

(a) Apply the oil seal lip with MP grease.

(b) Using a brass bar and hammer, drive in the drive shaft until it makes contact with the pinion shaft.

NOTICE: Be careful not to damage the boots.

HINT:

- Before installing the drive shaft, set the snap ring opening side facing downward.
- Whether or not the drive shaft is making contact with the pinion shaft can be known by sound or feeling when driving it in.

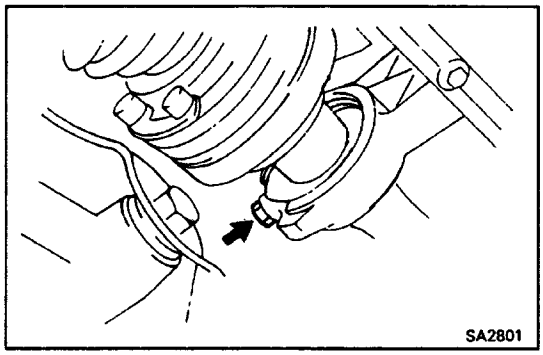

3. INSTALL RH DRIVE SHAFT

(a) Apply MP grease to the transaxle oil lip.

(b) Insert the center drive shaft with the RH drive shaft to the transaxle through the bearing bracket.

(c) Install the bolt to the bearing bracket.

Torque: 32 N–m (320 kgf–cm, 24 ft–lbf)

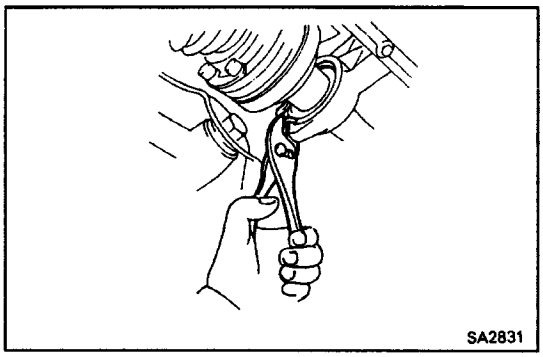

(d) Using pliers, install a new snap ring to the bearing bracket

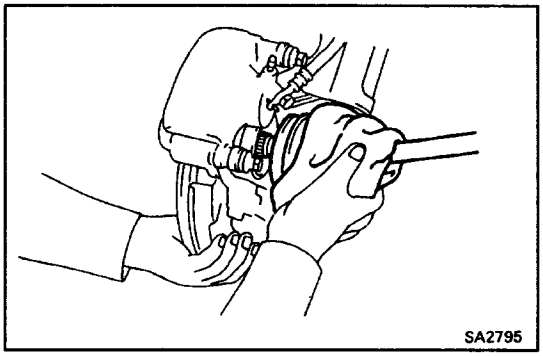

4. CONNECT OUTBOARD JOINT SIDE OF DRIVE SHAFT

Connect the outboard joint side of the drive shaft to the axle shaft.

NOTICE:

- **Be careful not to damage the boots.**
- **(w/ ABS)**
  Be careful not to damage the sensor rotor of the drive shaft.

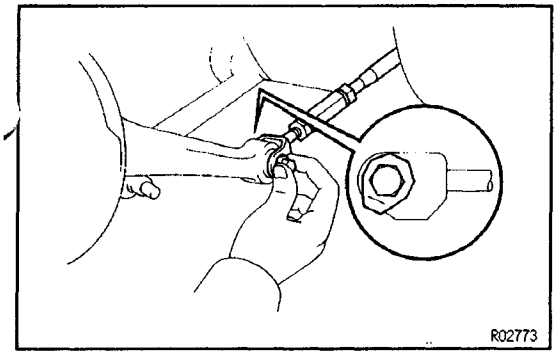

5. CONNECT SUSPENSION ARM

Temporarily connect the suspension arm to the rear axle carrier with the bolt and nut.

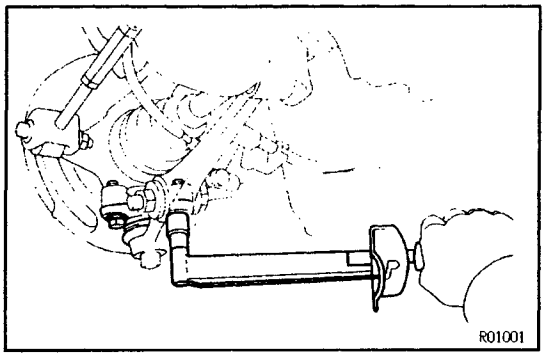

6. CONNECT BALL JOINT TO AXLE CARRIER

(a) Connect the ball joint to the axle shaft.

(b) Install and torque the two bolts.

Torque: 113 N–m (1,150 kgf–cm, 73 ft–lbf)

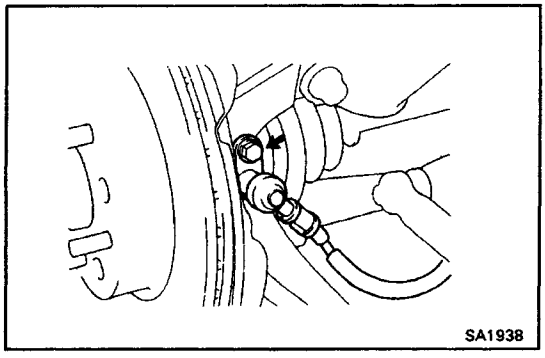

7. (w/ABS)

INSTALL SPEED SENSOR TO AXLE CARRIER

Torque: 7.4 N–m (80 kgf–cm, 69 in.–lbf)

HINT: Before installing, check that there is no ferric'. chip or foreign material on the sensor tip.

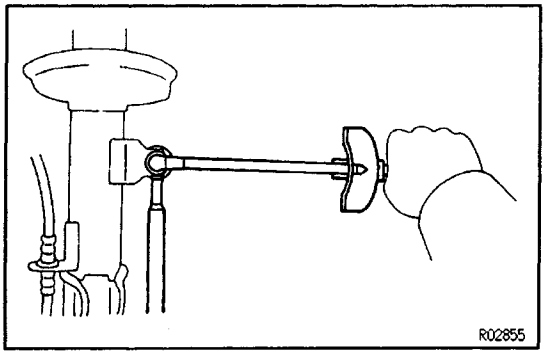

8. CONNECT STABILIZER LINK

Connect the stabilizer link, with the nut.

Torque: 48 N–m (500 kgf–cm, 36 ft–lbf)

HINT: If the ball joint stud together with the nut, use a hexagon wrench 5 mm (0.197 in.) to hold the stud.

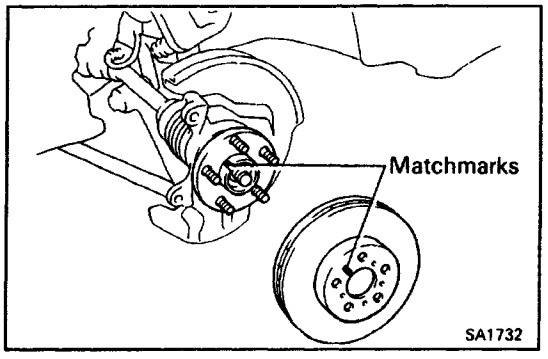

9. INSTALL ROTOR DISC TO AXLE CARRIER

HINT: Align the matchmarks, and install the rotor the axle shaft.

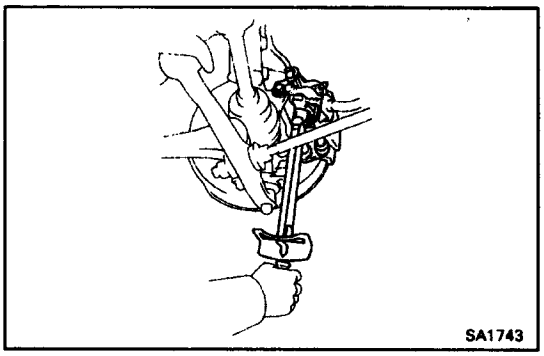

10. INSTALL BRAKE CALIPER

Install the brake caliper to the axle carrier with the two bolts.

Torque: 59 N–m (600 kgf–cm, 43 ft–lbf)

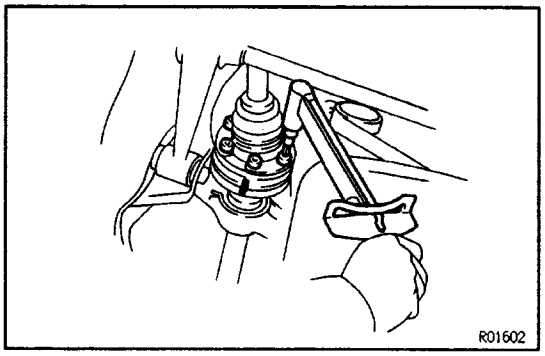

11. TIGHTEN INBOARD JOINT HOLDING SIX HEXAGON BOLTS.

With the parking brake engaged, using SST torque the six hexagon bolts.

SST 09923–00020

Torque: 65 N–m (660 kgf–cm, 217 ft–lbf)

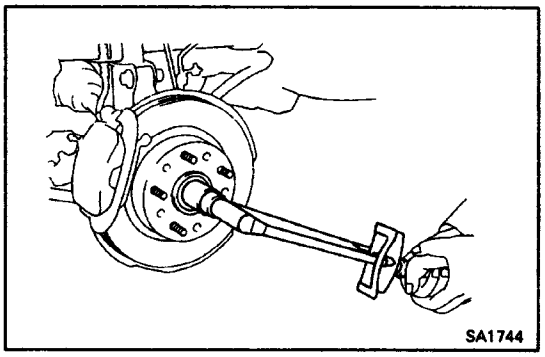

12. INSTALL BEARING, LOCK NUT CAP AND COTTER PIN

(a) Install the lock nut.

(b) With the parking brake engaged, and tighten the nut.

Torque: 284 N–m (3,000 kgf–cm, 217 ft–lbf)

(c) Install the lock nut cap, and using pliers, install a new cotter pin.

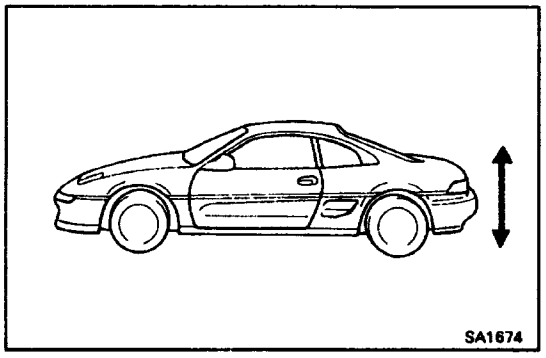

13. STABILIZE SUSPENSION

(a) Install the rear wheel and lower vehicle.

Torque: 103 N–m (1,050 kgf–cm, 76 ft–lbf)

(b) Bounce the vehicle up and down several times to allow the suspension to settle.

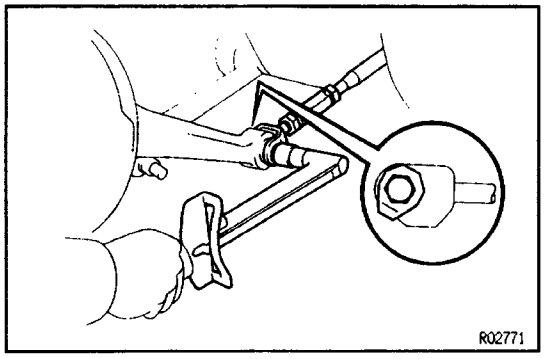

14. TORQUE BOLT AND NUT

Torque the suspension arm mount bolt and nut with the vehicle load applied on the 'suspension.

Torque: 103 N–m (1.050 kgf–cm, 76 ft–lbf)

15. FILL TRANSAXLE WITH GEAR OIL

Oil grade:

API GL–4 or GL–5

Viscosity:

SAE 75W–90 or 85W–90

16. INSTALL ENGINE UNDERCOVER

REAR DRIVE SHAFT (5S–FE)

DESCRIPTION

The drive has a tripod type CVJ (Constant Velocity Joint) on the differential side and Rzeppa type CVJ on the wheel side.

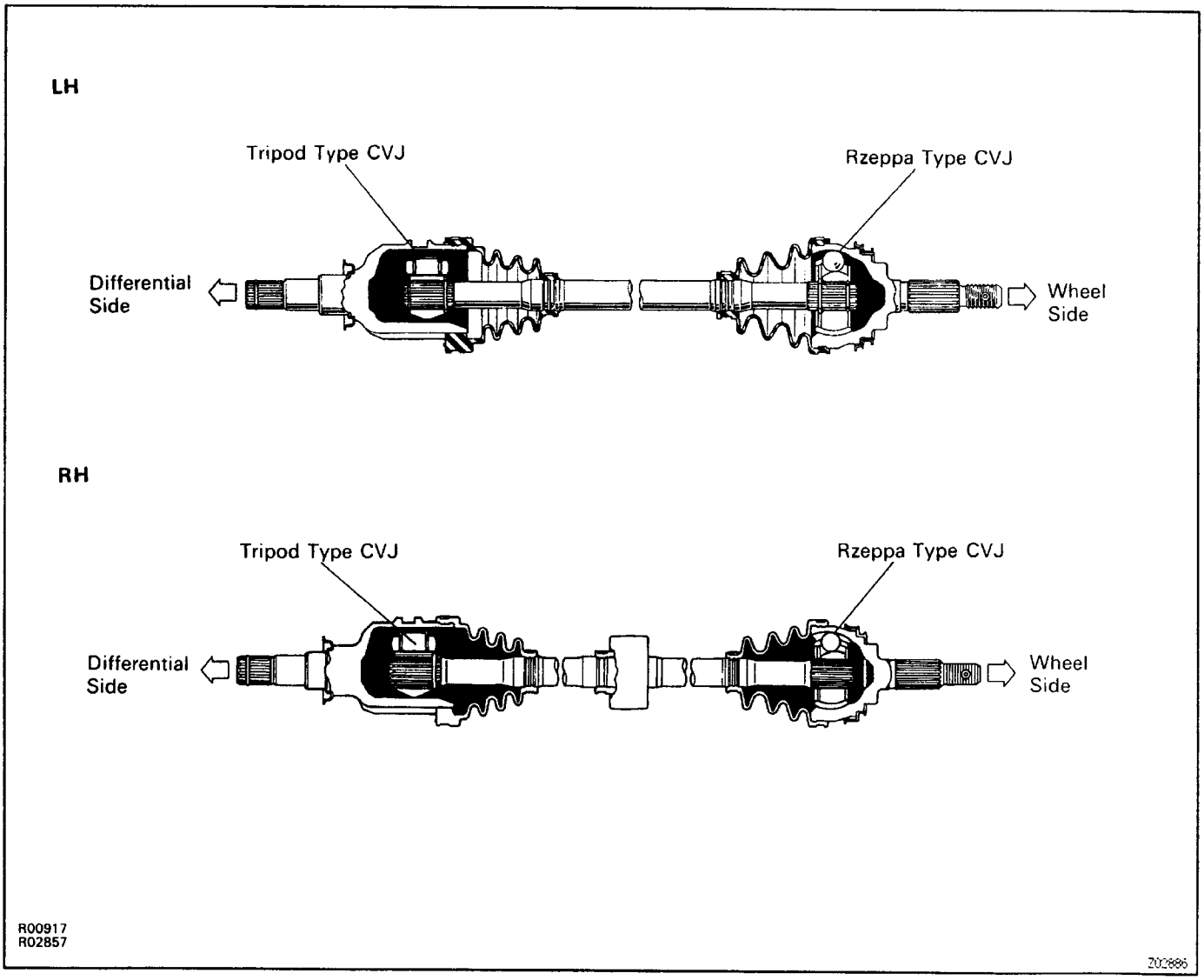

PREPARATION

SST (SPECIAL SERVICE TOOLS)

SA0C4–01

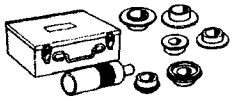 09316–60010 Transmission & Transfer Bearing Replacer 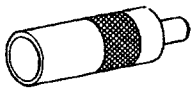 (09316–00010) Replacer Pipe	
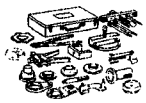 09350–32014 TOYOTA Automatic Transmission Tool Set  (09351–32111 Side Bearing Race Replacer  (09351–32130) Handle  (09351–32150) Oil Seal Replacer	
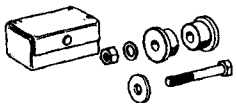 09608–16041 Front Hub Bearing Adjusting Tool  (096008–02020) Bolt & Nut  (096008–02040) Retainer	
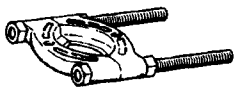 09950–00020 Bearing Remover	Center drive shaft dust cover

SA0C5–01

RECOMMENDED TOOLS

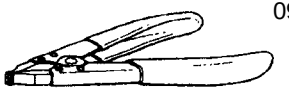 09905–00012 Snap Ring No. 1 Expander	For removing and installing snap ring

SA0C6–01

EQUIPMENT

Torque wrench	

LUBRICANT

SA0C7-01

Item	Capacity	Classification
Outboard joint grease	120 – 130 g (4.2 – 4.6 oz.)	
Inboard joint grease	232 – 242 g (8.2 – 8.5 oz.)	

REAR DRIVE SHAFT

SA0C8–01

COMPONENTS

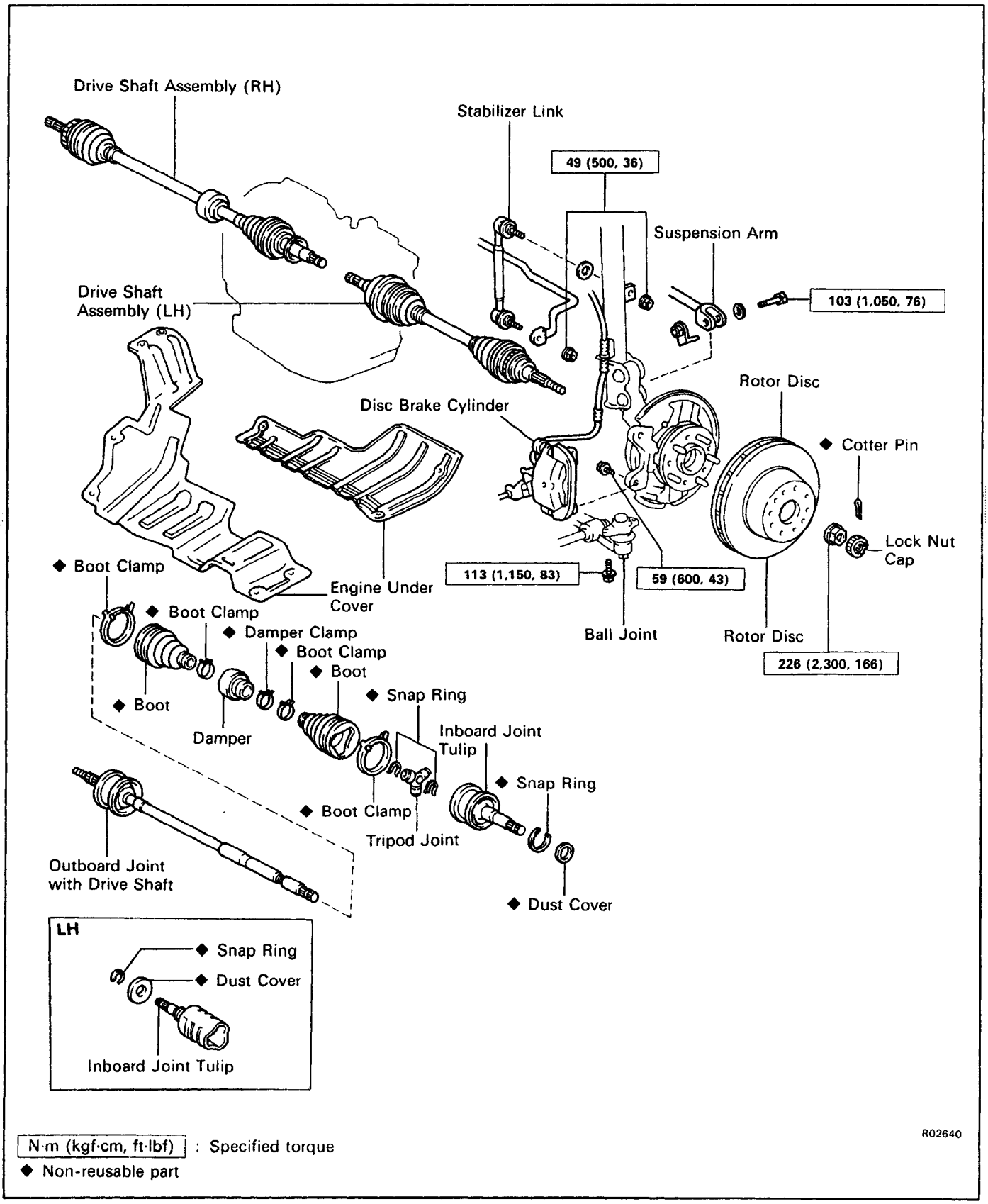

N·m (kgf·cm, ft·lbf) : Specified torque

◆ Non-reusable part

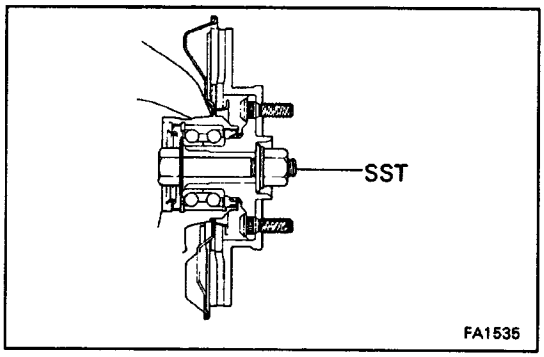

REAR DRIVE SHAFT REMOVAL

SA0C9–01

NOTICE:

- **The axle bearing could be damaged if it is subjected to the vehicle weight, such as when moving the vehicle with the drive shaft removed. Therefore, if it is absolutely necessary to place the vehicle weight on the axle bearing, first support it with SST.**

SST 09608–16441 (09608–02020, 09608–02040)

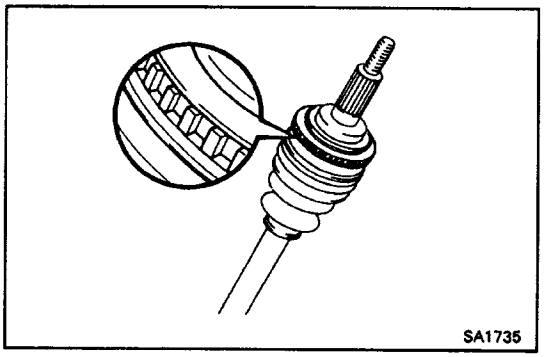

- **(w/ ABS)**
  After disconnecting the drive shaft from the axle hub, work carefully so as not to damage the sensor rotor serrations on the drive shaft.

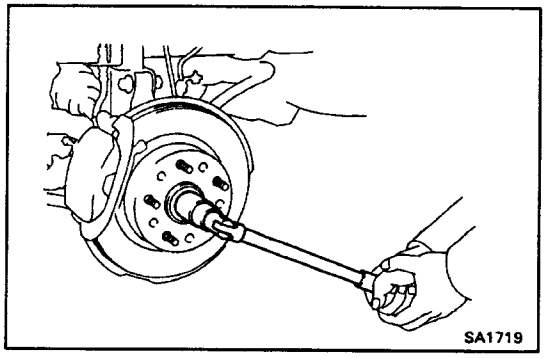

1. JACK UP VEHICLE AND REMOVE REAR WHEEL
2. REMOVE ENGINE UNDER COVER
3. DRAIN TRANSAXLE OIL
4. REMOVE COTTER PIN, LOCK NUT CAP, BEARING LOCK NUT AND PLATE WASHER

(a) Remove the cotter pin and lock nut cap.
(b) With the parking brake engaged, remove the bearing lock nut.

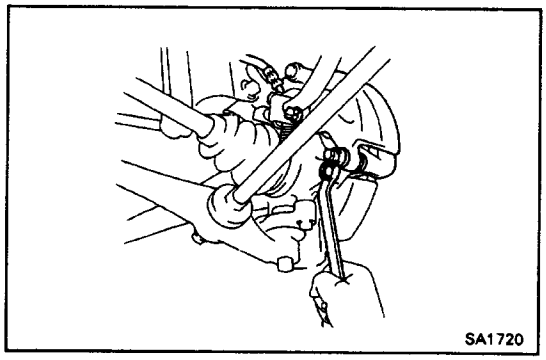

5. REMOVE BRAKE CALIPER

Remove the two bolts and brake caliper from the axle carrier and suspend it with wire.

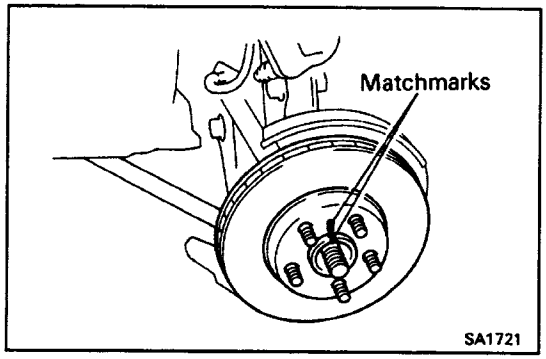

6. REMOVE ROTOR DISC

HINT: Before removing the rotor disc, place the mat–chmarks on the axle shaft and rotor disc.

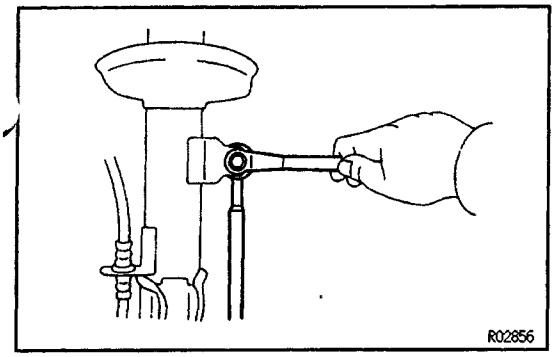

7. DISCONNECT STABILIZER LINK

Remove the upper side nut and disconnect the link.

HINT: If the ball joint stud turns together with the nut, use a hexagon wrench 5 mm (0.197 in.) to hold the stud.

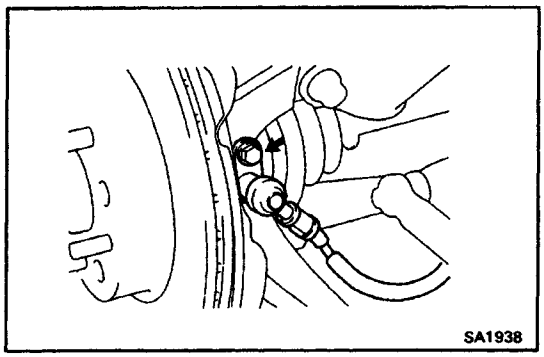

8. (w/ ABS)

REMOVE SPEED SENSOR FROM AXLE CARRIER

Remove the bolt and pull out the speed sensor.

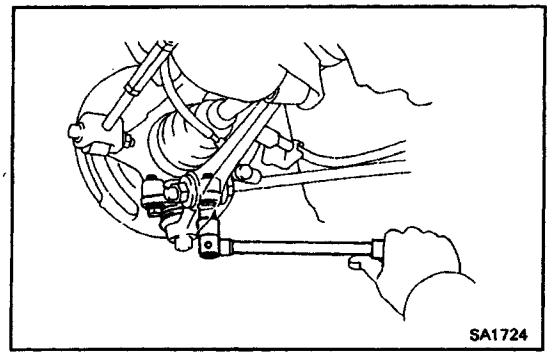

9. DISCONNECT LOWER ARM FROM REAR AXLE CARRIER

(a) Remove the two bolts holding the ball joint to the lower arm.

(b) Disconnect the lower arm.

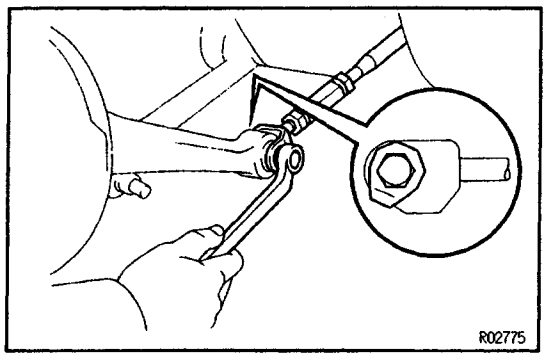

10. DISCONNECT SUSPENSION ARM

(a) Remove the suspension arm mounting nut and bolt, disconnect the suspension arm from the rear axle carrier.

(b) Similarly disconnect the other side.

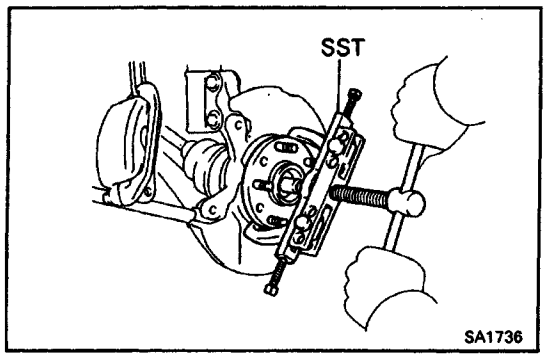

11. DISCONNECT DRIVE SHAFT FROM AXLE CARRIER

Using SST, disconnect the drive shaft from the axle carrier.

SST 09950–20017

NOTICE:

- **Cover the drive shaft boot with cloth to protect it from damage.**

- **(w/ ABS)**
  Be careful not to damage the sensor rotor of the drive shaft.

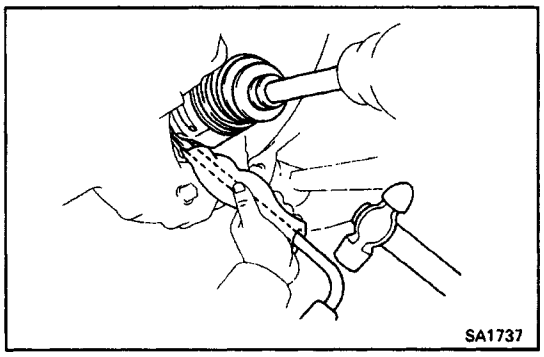

12. REMOVE LH DRIVE SHAFT

Using a hammer and hub nut wrench or an equivalent, remove the LH drive shaft.

NOTICE:

- **Be careful not to damage the dust cover.**
- **Cover the hub nut wrench or an equivalent with cloth so as not to damage the transaxle body.**

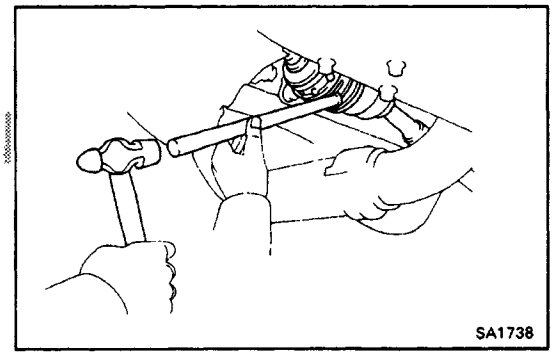

13. REMOVE RH DRIVE SHAFT

Using a hammer and brass bar, drive out the RH drive shaft.

SA0CA–01

OIL SEAL REPLACEMENT

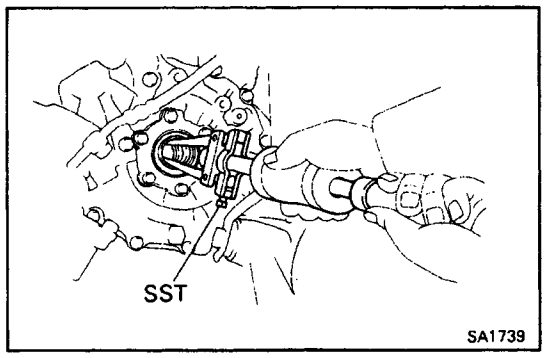

1. REMOVE OIL SEAL

Using SST, drive out the oil seal.

SST 09308 = 00010

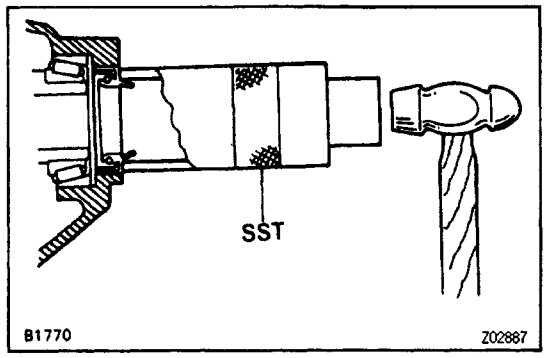

2. INSTALL NEW OIL SEAL

(a) (M /T)

Using SST and hammer, tap in a new oil seal.

SST 09316–60010 (09316–00010)

HINT: Coat the oil seal lip with MP grease.

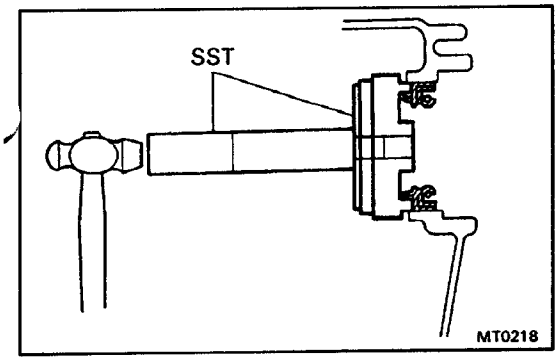

(b) (A/T)
Using SST and hammer, tap in a new LH oil seal.
SST 09350–32014 (09351–32111, 09351–32150)
HINT: Coat the oil seal lip with MP grease.

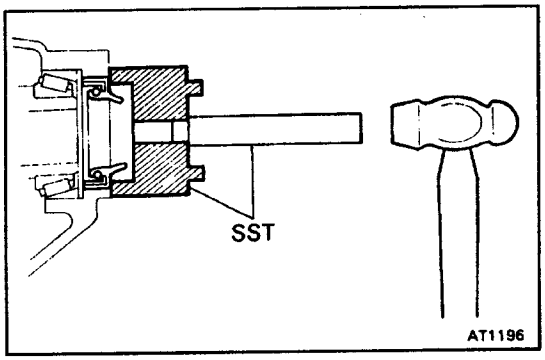

(c) (A/T)
Using SST and hammer, tap in a new RH oil seal.
SST 09350–32014 (09351–32130, 09351–32150)
HINT: Coat the oil seal lip with MP grease.

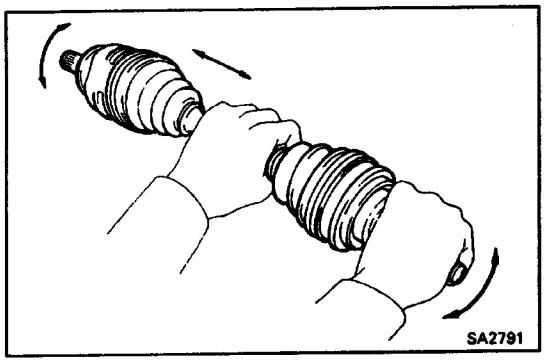

REAR DRIVE SHAFT DISASSEMBLY SA0CB–01

1. CHECK DRIVE SHAFT

(a) Check to see that there is no play in the outboard joint.
(b) Check to see that inboard joint slides smoothly in the thrust direction.
(c) Check to see ’that there is no remarkable play in the radial direction of the inboard joint.
(d) Check for damage to boots.

2. REMOVE SNAP RING FROM INBOARD JOINT SHAFT

Using a screwdriver, pry out the snap ring.

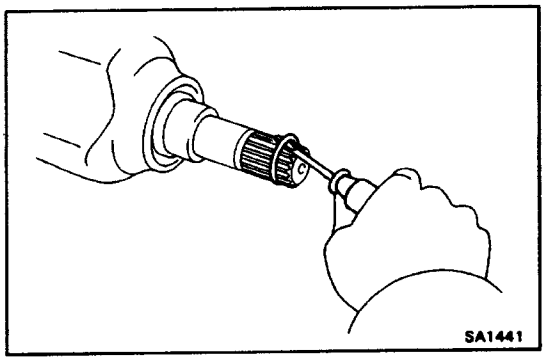

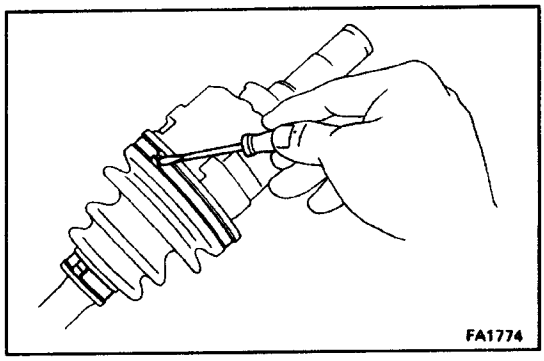

3. REMOVE INBOARD JOINT BOOT CLAMPS

(a) Using a screwdriver, remove the two boot clamps.
(b) Slide the inboard joint boot toward the outboard joint.

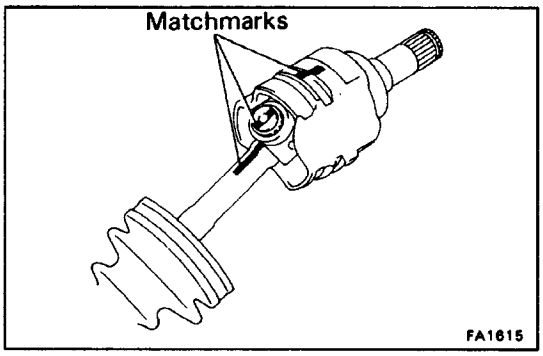

4. DISASSEMBLY INBOARD JOINT

(a) Place matchmarks on the inboard joint tulip, tripod and the shaft.

NOTICE: Do not punch the marks.

(b) Remove the inboard joint tulip from the drive shaft.

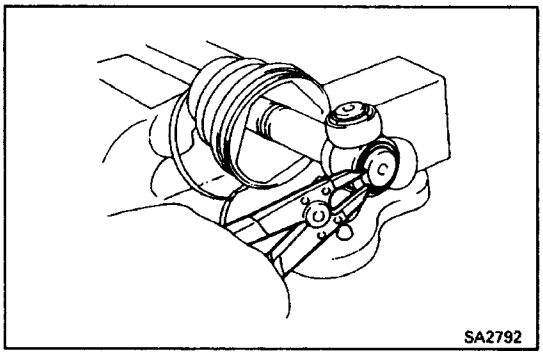

5. DISASSEMBLY TRIPOD JOINT

(a) Using a snap ring expander, remove the snap ring.

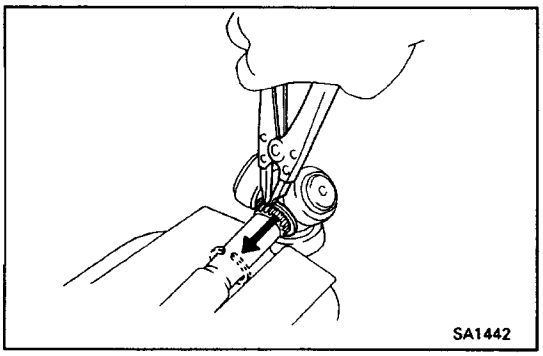

(b) Using a snap ring expander, temporarily slide the snap ring toward the outboard joint side.

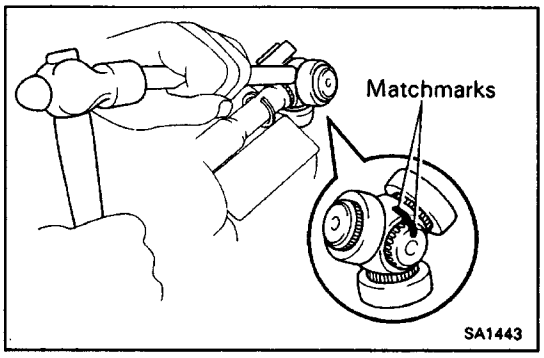

(c) Place the matchmarks on the drive shaft and tripod.

NOTICE: Do not punch the marks.

(d) Using a brass bar and a hammer, remove the tripod joint from the drive shaft.

NOTICE: Do not tap the roller.

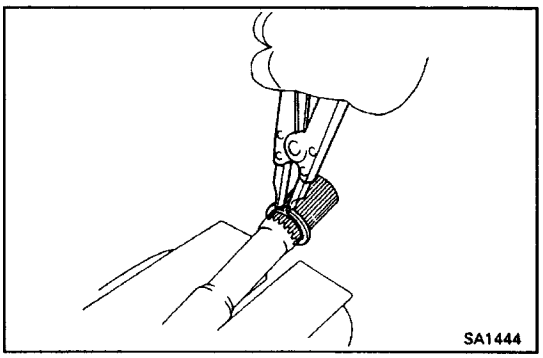

(e) Using a snap ring expander, remove the snap ring.

6. REMOVE INBOARD JOINT BOOT

Slide out the inboard joint boot.

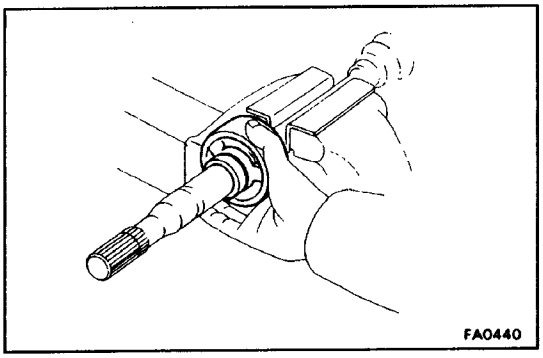

7. REMOVE DAMPER

(a) Using a screwdriver, remove the damper clamp.

(b) Slide out the damper.

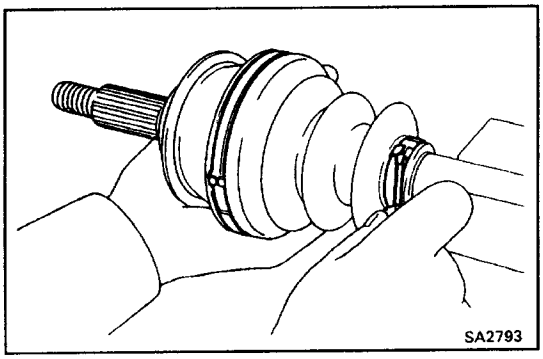

8. REMOVE OUTBOARD JOINT BOOT CLAMPS AND BOOT

(a) Using a screwdriver, remove the two boot clamps of the outboard joint boot.

(b) Slide out the boot from the outboard joint.

NOTICE: Do not disassemble the outboard joint.

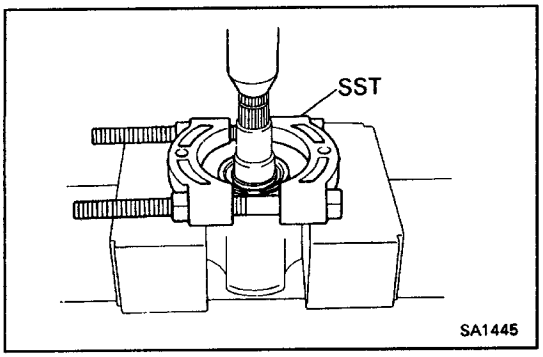

9. REMOVE DUST COVER

(a) (LH Drive Shaft)

Using SST and press, press out the dust cover from the inboard joint tulip.

SST 09950–00020

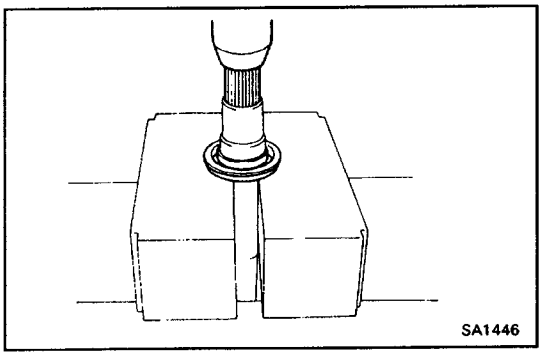

(b) (RH Drive Shaft)

Using a press, press out the dust cover.

SA0CC–01

REAR DRIVE SHAFT ASSEMBLY

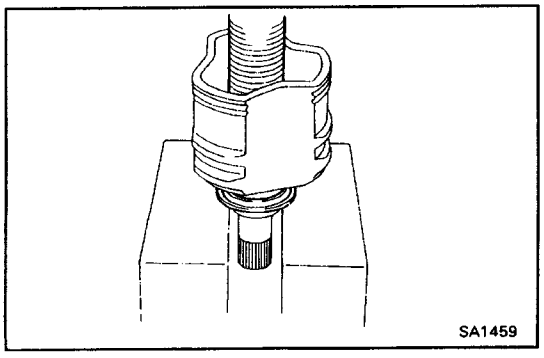

1. INSTALL DUST COVER

Using a press, press into a new dust cover.

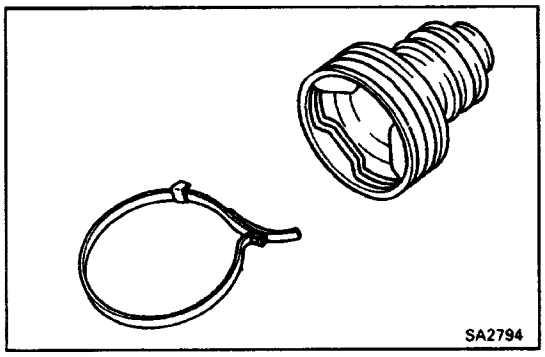

2. TEMPORARILY INSTALL NEW OUTBOARD JOINT BOOT AND NEW BOOT CLAMPS

Temporarily install a new boot and two new boot clamps for the outboard joint to the drive shaft.
HINT: Before installing the boot, wrap vinyl tape around the spline of the drive shaft to prevent dam–aging the boot.

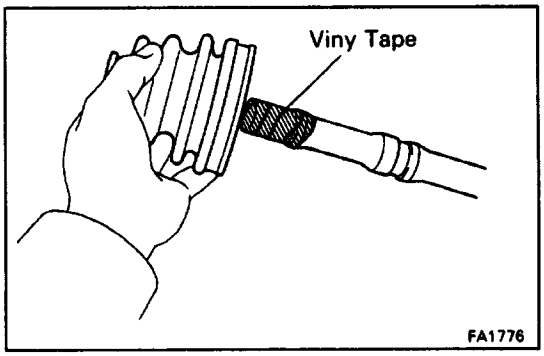

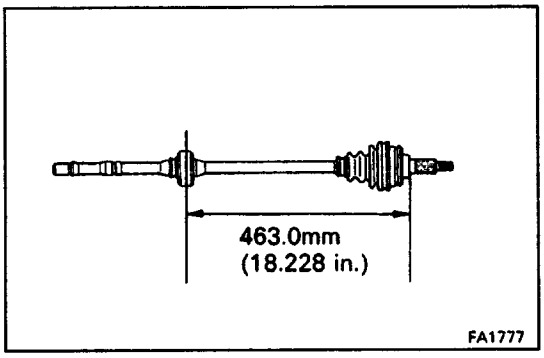

3. TEMPORARILY INSTALL DAMPER AND NEW DAMPER CLAMP

HINT: Fix the clamp position in line with the groove of the drive shaft.

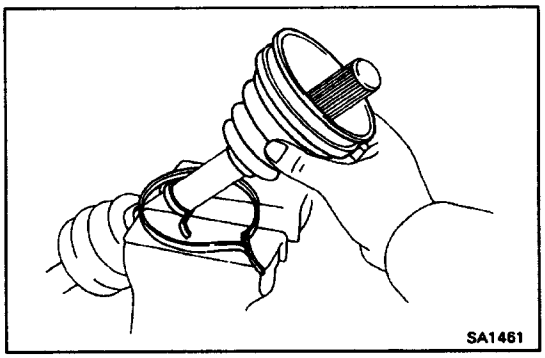

4. TEMPORARILY INSTALL NEW INBOARD JOINT BOOT AND NEW BOOT CLAMPS

Temporarily install a new boot and two new boot clamps for the inboard joint to the drive shaft.

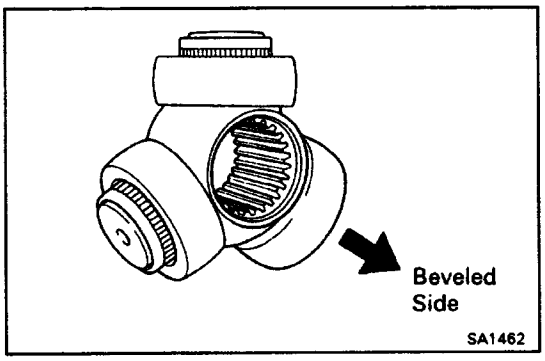

5. ASSEMBLE TRIPOD JOINT

(a) Place the beveled side of the tripod axial spline toward outboard joint.

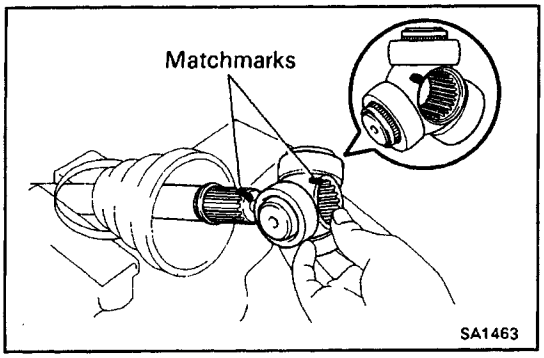

(b) Align the matchmarks placed before disassembly.

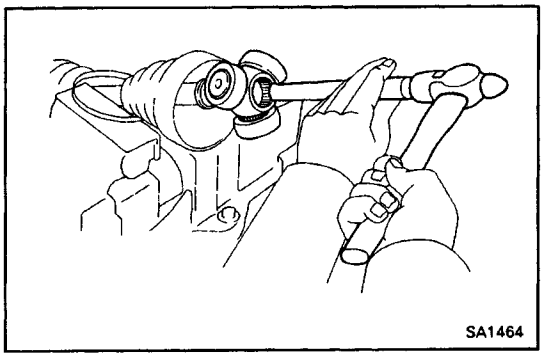

(c) Using a brass bar and hammer, tap in the tripod joint to the drive shaft.

NOTICE: Do not tap the roller.

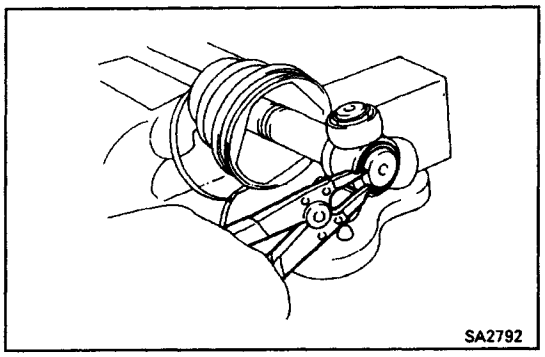

(d) Using a snap ring expander, install a new snap ring.

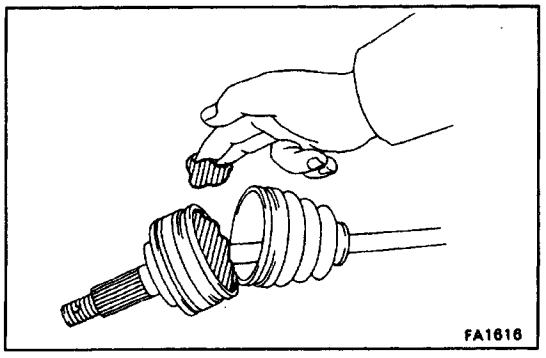

6. INSTALL BOOT TO OUTBOARD JOINT

Before assembling the boot, fill grease into the out–board joint and boot.

HINT: Use the grease supplier in the boot kit.

Grease capacity:

120–130 g (0–26–0.29 lb)

Grease color:

Black

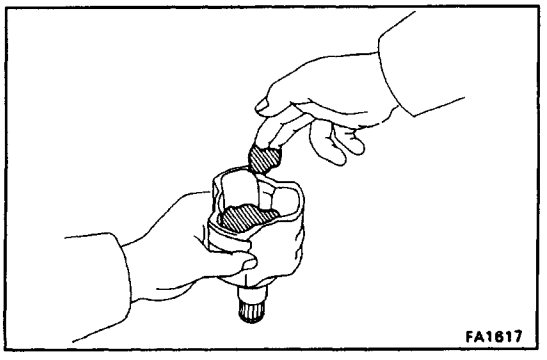

7. INSTALL INBOARD JOINT TULIP TO REAR DRIVE SHAFT

(a) Pack in the grease to the boot and inboard joint tulip.

HINT: Use the grease supplied in the boot kit.

Grease capacity:

232–242 g (0.51–0.53 lb)

Grease color:

Yellow ocher

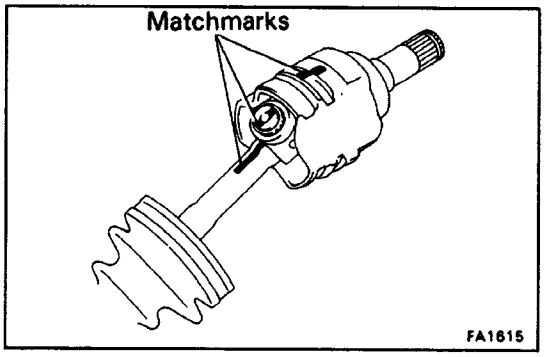

(b) Align the matchmarks placed before remove, and install the inboard joint tulip to the drive shaft.
(c) Install the boot to the inboard joint tulip.

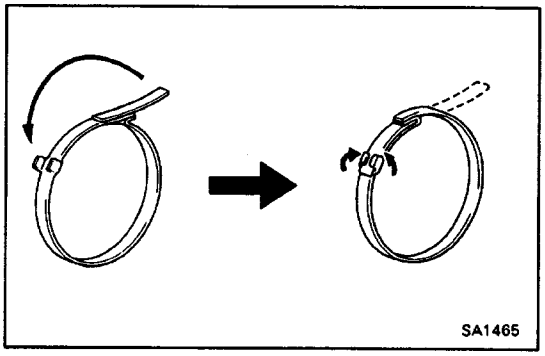

8. ASSEMBLE BOOT CLAMPS AND DAMPER CLAMP

(a) Be sure the boot is on the shaft groove.
(b) Using a screwdriver, bend the clamp and lock it as shown.

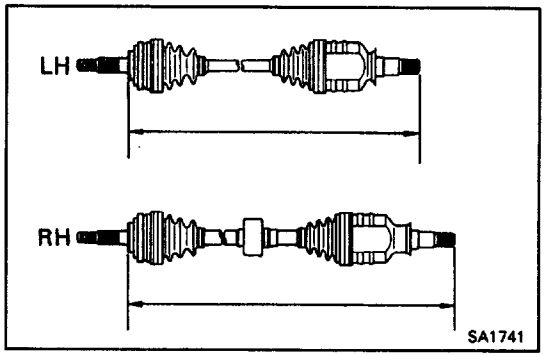

(c) Insure that the boot is not stretched or contacted when the drive shaft is at standard length.
Drive shaft standard length:
LH 540.3±5.0 mm (21.272±0.197 in.)
RH 831.4±5.0 mm (32.732±0.197 in.)

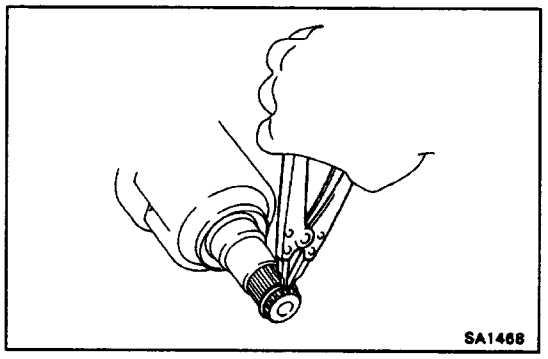

(d) Using a snap ring expander, install a new snap ring.

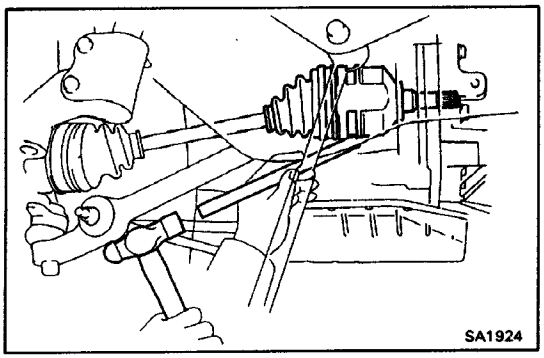

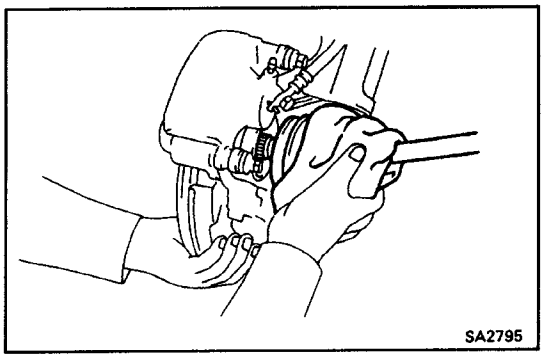

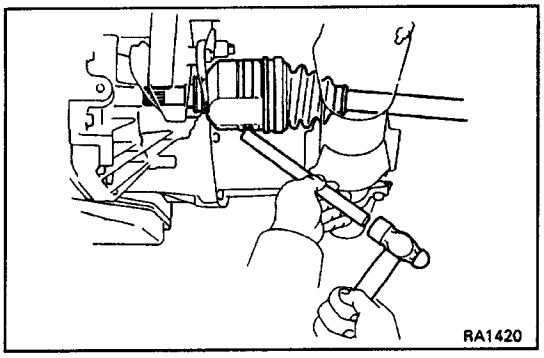

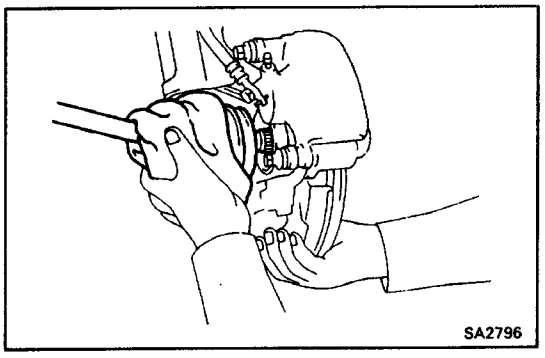

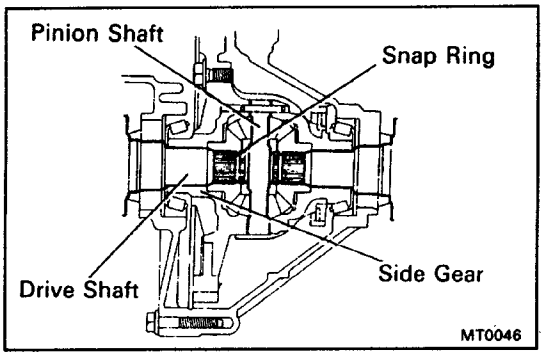

REAR DRIVE SHAFT INSTALLATION

SA0CD–01

1. INSTALL LH DRIVE SHAFT

(a) Coat the oil seal lip with MP grease.

(b) Using a brass bar and hammer, drive in the drive shaft until it marks contact with the pinion shaft.

NOTICE: Be careful not to damage the boots.

HINT:

- Before installing the drive shaft, set the snap ring opening side facing downward.
- Whether or not the drive shaft is making contact with the pinion shaft can be known by sound or feeling when driving it in.

(c) Install the outboard joint side of the drier shaft to the axle shaft.

NOTICE:

- **Be careful not to damage the boots.**
- **(w/ ABS)**
  Be careful not to damage the speed sensor rotor of the drive shaft.

2. INSTALL RH DRIVE SHAFT

(a) Coat the oil seal lip with MP grease.

(b) Using a brass bar and hammer, drive in the drive shaft until it makes contact with the pinion shaft.

NOTICE: Be careful not to damage the boots.

HINT:

- Before installing the drive shaft, set the snap ring opening side facing downward.
- Whether or not the drive shaft is making contact with the pinion shaft can be known by sound or feeling when driving it in.

(c) Install the outboard joint side of the drier shaft to the axle shaft.

NOTICE:

- **Be careful not to damage the boots.**
- **(w/ ABS)**
  Be careful not to damage the speed sensor rotor of the drive shaft.

3. CHECK INSTALLATION OF REAR DRIVE SHAFT

(a) Check that there is 2–3 mm (0.08–0.12 in.) of play in axial direction.

(b) Check that the drive shaft will not come out by trying to pull it completely out by hand.
HINT: When checking pull the inboard joint so as not to damage the boots.

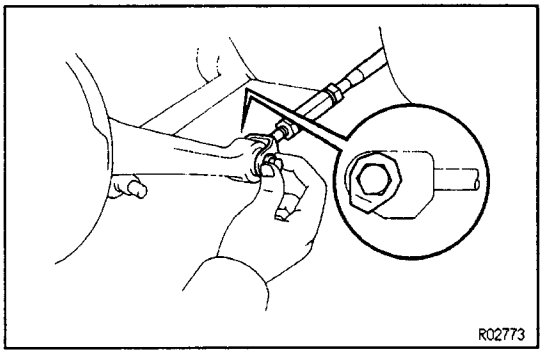

4. CONNECT SUSPENSION ARM

Temporarily connect the suspension arm to rear axle carrier with the bolt and nut.

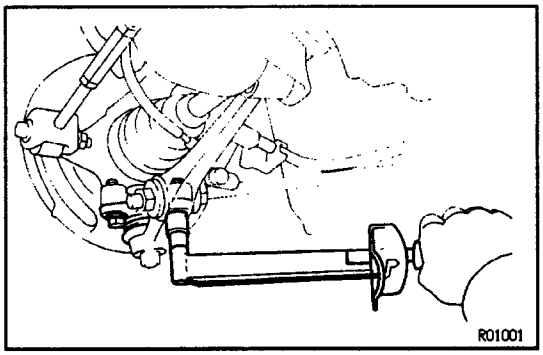

5. CONNECT BALL JOINT TO AXLE CARRIER

(a) Connect the ball joint to the axle shaft.

(b) Install and torque the two bolts.

Torque: 113 N–m (1,150 kgf–cm, 83 ft–lbf)

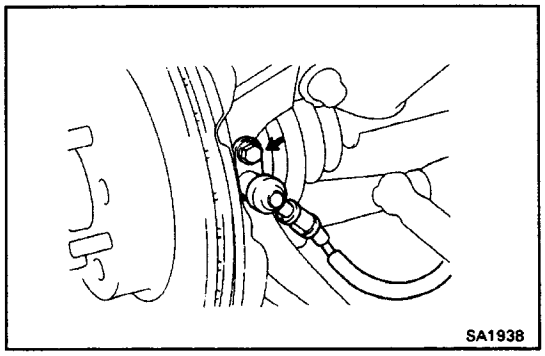

6. (w/ ABS)

INSTALL SPEED SENSOR TO AXLE CARRIER

Torque: 7.4 N–m (80 kgf–cm, 69 ft–lbf)

HINT: Before installing, check that there is no ferric clip or foreign material on the sensor tip.

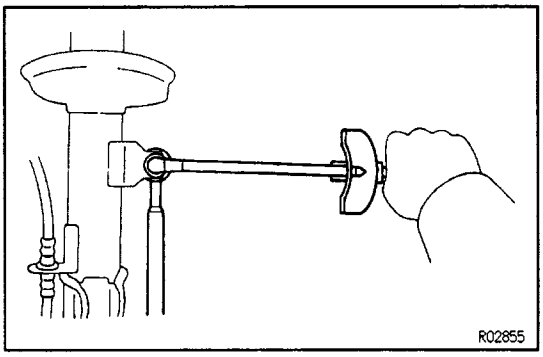

7. CONNECT STABILIZER LINK

Connect the upper side nut to the stabilizer link.

Torque: 49 N–m (500 kgf–cm, 36 ft–lbf)

HINT: If the ball joint stud turns together with the nut, use a hexagon wrench 5 mm (0.197 in.) to hold the stud.

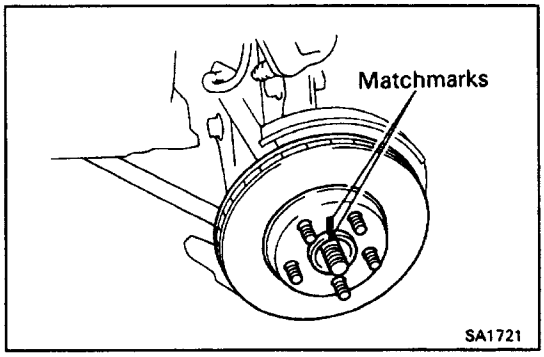

8. INSTALL ROTOR DISC TO AXLE CARRIER

HINT: Before removing the rotor disc,place the mat–chrnarks on the axle shaft and rotor disc.

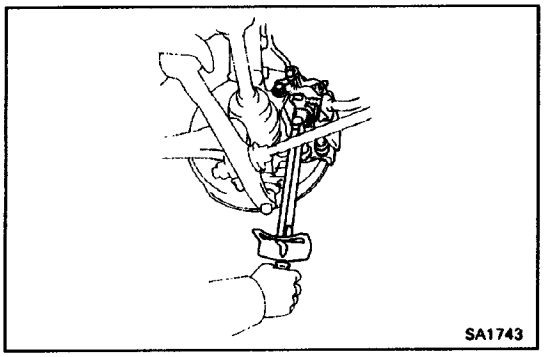

9. INSTALL BRAKE CALIPER

Install the brake caliper to the axle carrier with the two bolts.

Torque: 59 N–m (600 kgf–cm, 43 ft–lbf)

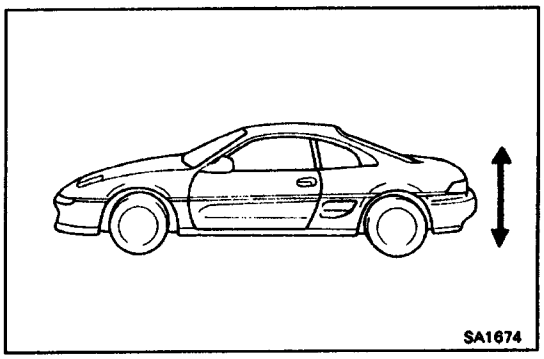

10. STABILIZE SUSPENSION

(a) Install the rear wheel and lower the vehicle.

Torque: 103 N–m (1,050 kgf–cm, 76 ft–lbf)

(b) Bounce the vehicle up and down several times to allow the suspension to the settle.

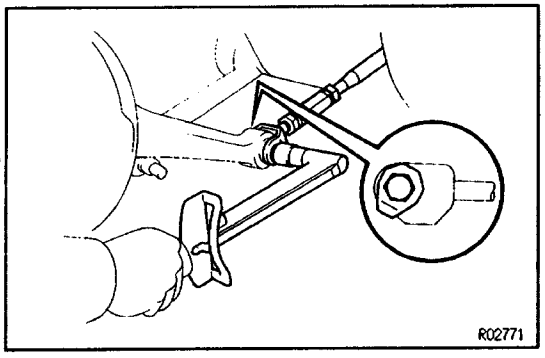

11. TORQUE BOLT AND NUT

Torque the suspension arm mount bolt and nut with the vehicle load applied on the suspension.

Torque: 103 N–m (1.050 kgf–cm, 76 ft–lbf)

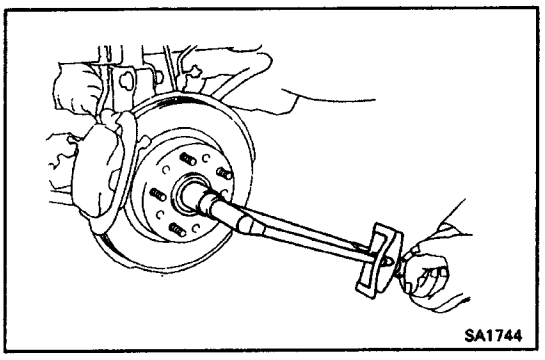

12. INSTALL BEARING LOCK NUT, LOCK NUT CAP AND COTTER PIN

(a) Remove the rear wheel.

(b) Install the washer and lock nut.

(c) With the parking brake engaged, and tighten the nut.

Torque: 226 N–m (2,300 kgf–cm, 166 ft–lbf)

(d) Install the lock cap, and using pliers, install a new cotter pin.

13. FILL TRANSAXLE WITH GEAR OIL

Fluid type:

ATF DEXRON ® II

14. INSTALL ENGINE UNDER COVER

BALL JOINT

SA0DO–01

COMPONENTS

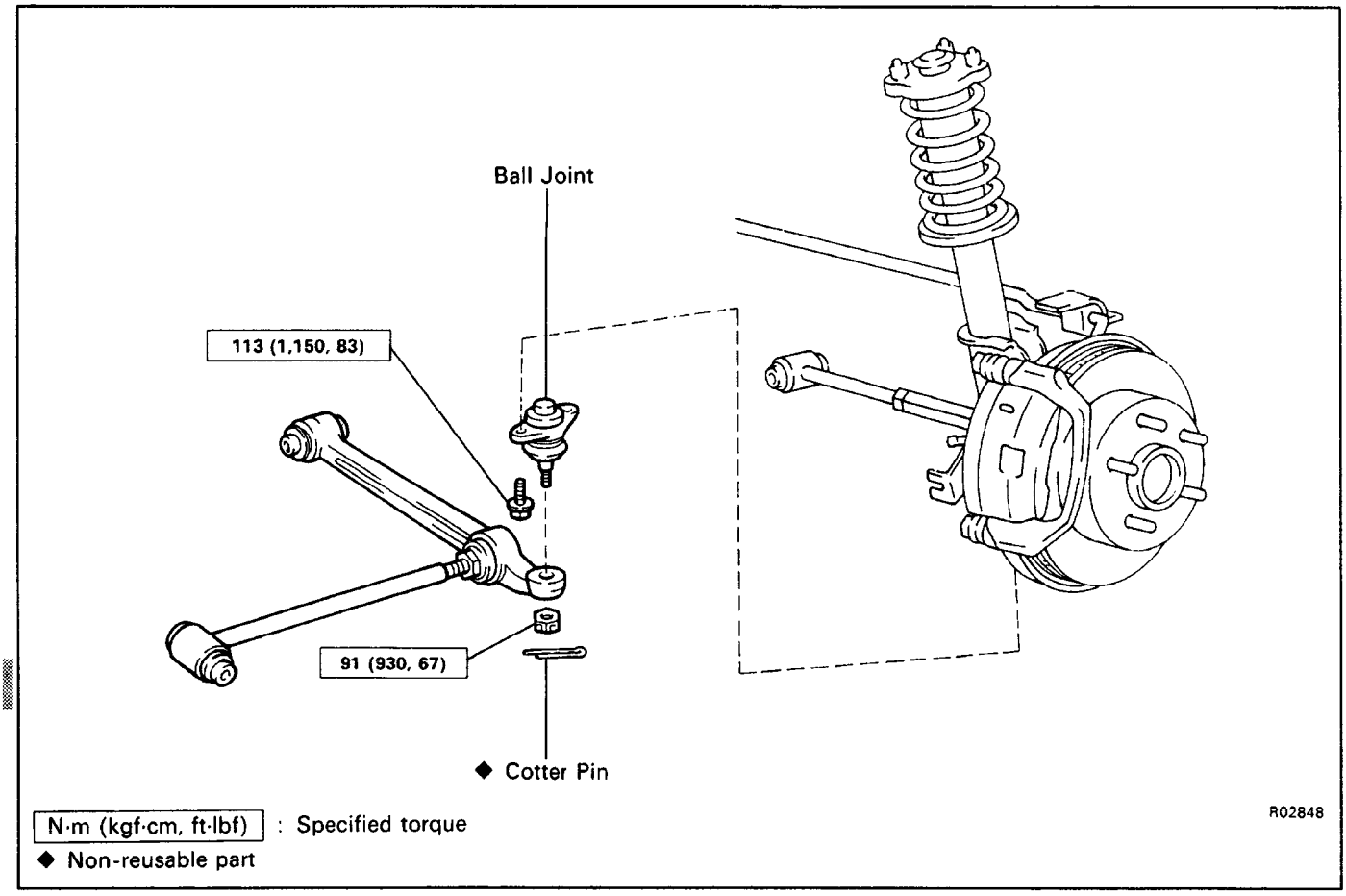

N·m (kgf·cm, ft·lbf) : Specified torque
◆ Non-reusable part

BALL JOINT ON–VEHICLE INSPECTION

INSPECT BALL JOINTS FOR EXCESSIVE LOOSENESS

(a) Jack up the rear of the vehicle and place wooden blocks with a height of 180–200 mm (7.09–7.87 in.) under one rear tire.

(b) Lower the jack until there is about half a load on the front coil spring. Place stands under the vehicle for safety.

(c) Move the lower arm up and down and check that the ball joint has no excessive play.

Ball joint vertical play:
0 mm (0 in.)

SA0D2–01

BALL JOINT REMOVAL

REMOVE BALL JOINTS

(a) Remove the cotter pin and nut from the lower arm.

(b) Using SST, disconnect the ball joint from the lower arm.

SST 09628–62011

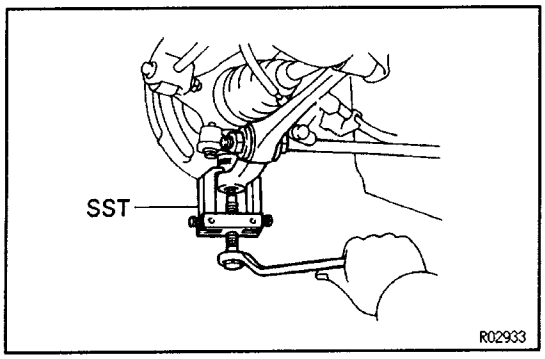

(c) Remove the two bolts and ball joint from the rear axle carrier.

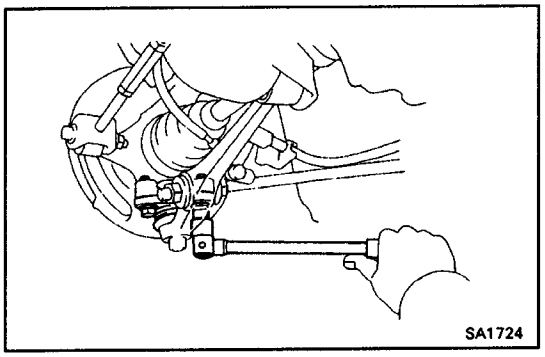

SA0D3–01

BALL JOINT INSPECTION

INSPECT BALL JOINT FOR ROTATION CONDITION

(a) Flip the ball joint stud back and forth 5 times as, shown in the figure, before installing the nut.

(b) Using a torque gauge, turn the nut continuously one turn each 2–4 seconds and take the torque reading on the fifth turn.

Torque (turning):

1.47–2.94 N–m (15–30 kgf–cm, 13–26 in.–lbf)

If not with in specification, replace the ball joint.

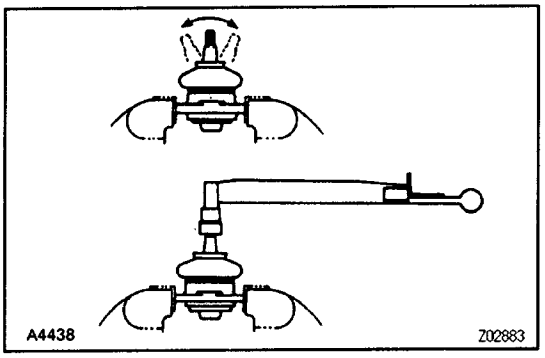

SA0D4–01

BALL JOINT INSTALLATION

1. INSTALL BALL JOINT TO REAR AXLE CARRIER

Install the ball joint in place with the two bolts.

Torque: 113 N–m (1,150 kgf–cm, 83 ft–lbf)

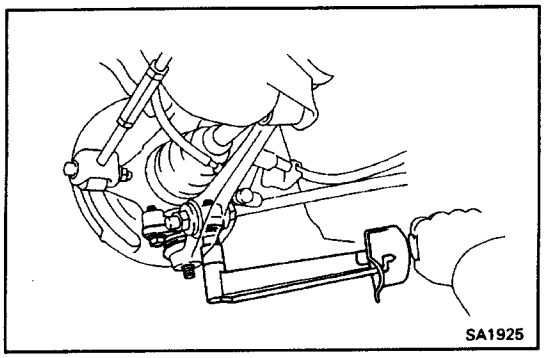

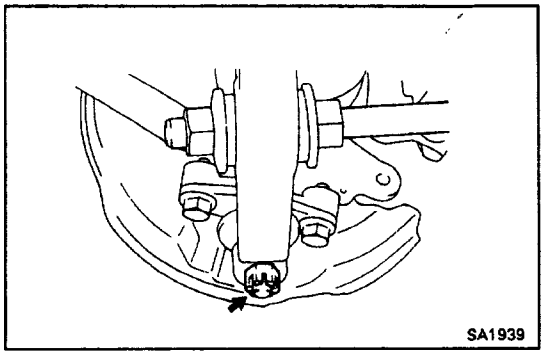

2. CONNECT LOWER ARM

(a) Connect the lower arm to the ball joint.

(b) Install the nut.

Torque: 91 N–m (930 kgf–cm, 67 ft–lbf)

(c) Install a new cotter pin.

REAR SUSPENSION

DESCRIPTION

SA0DR–01

The rear suspensions of the new model use MacPherson struts as in the previous model.
The basic construction and operation remain the same, but the suspension geometry and bushing have been modified to improve stability and riding comfort.

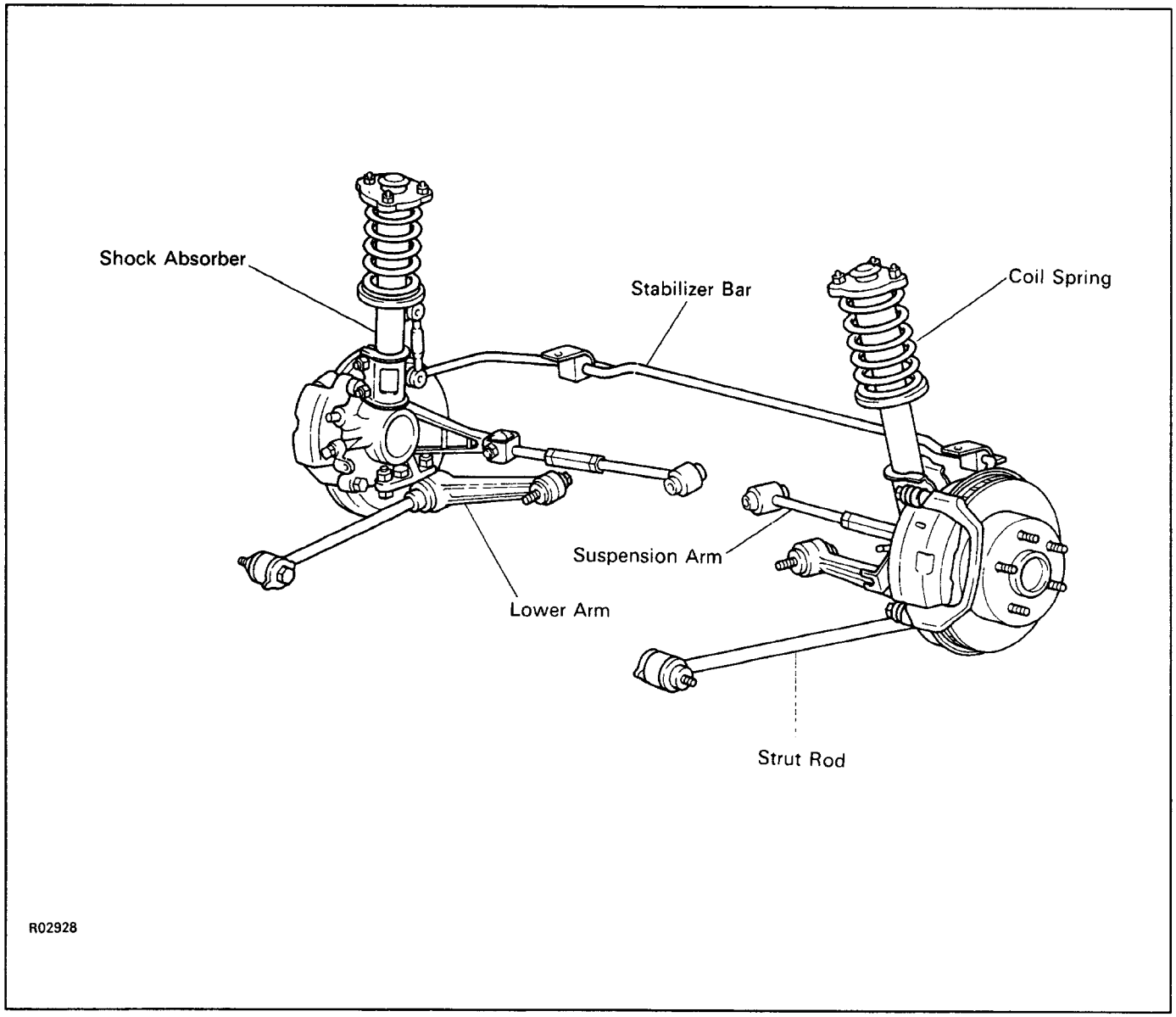

ENGINE LATERAL CONTROL ROD

SA0DL–01

COMPONENTS

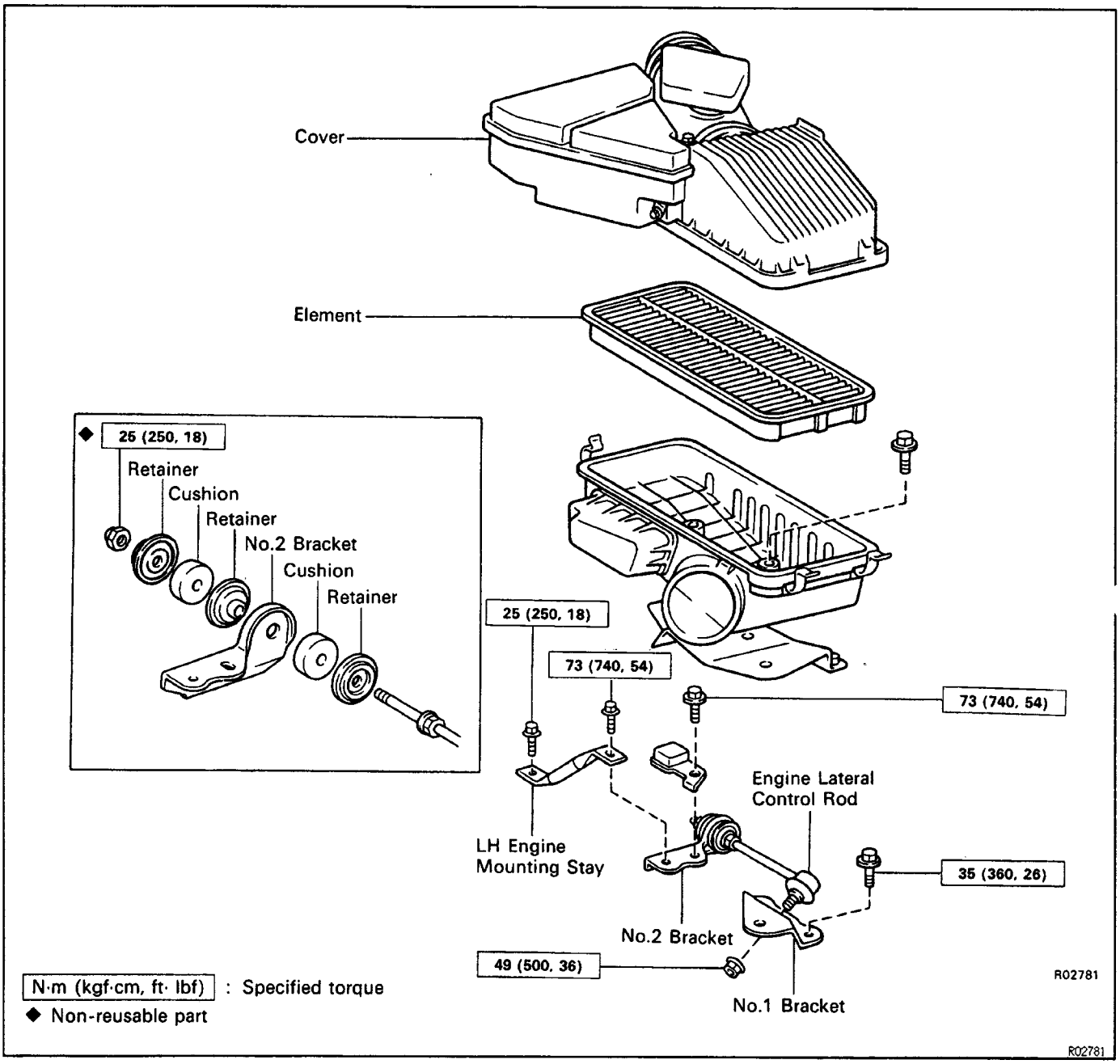

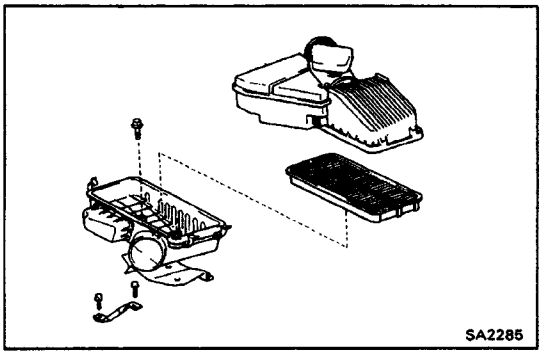

SA0DM–01

ENGINE LATERAL CONTROL ROD REMOVAL

1. REMOVE AIR CLEANER ASSEMBLY
2. REMOVE LH ENGINE MOUNTING STAY

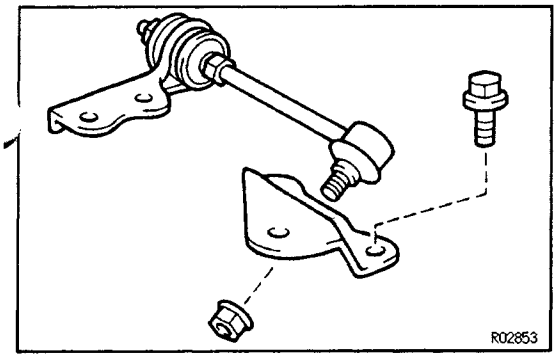

3. REMOVE ENGINE LATERAL CONTROL ROD

(a) Remove the engine lateral control rod with the No.1 and No.2 brackets.

(b) Remove the engine lateral control rod from the engine No.1 lateral control rod brackets.

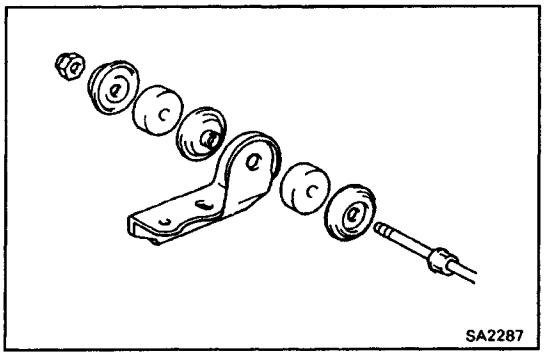

4. DISASSEMBLY ENGINE LATERAL CONTROL ROD

Remove the following parts.

- Nut
- Three retainers
- Two cushions
- No.2 bracket

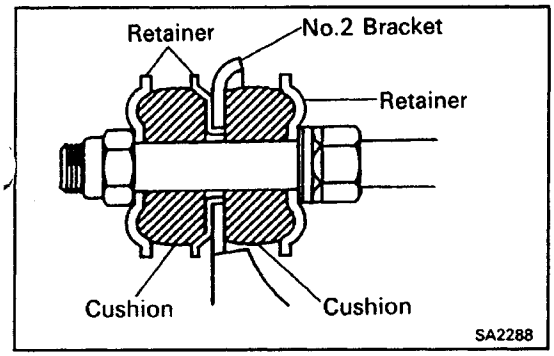

SA0DN–01

ENGINE LATERAL CONTROL ROD INSTALLATION

1. ASSEMBLE ENGINE LATERAL CONTROL ROD

Assemble the parts in the correct direction as shown.

Torque: 25 N–m (250 kgf–cm, 18 ft–lbf)

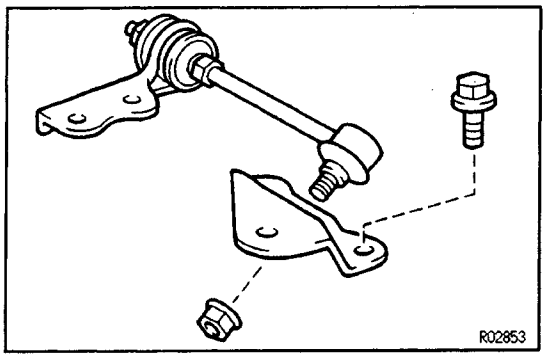

2. INSTALL ENGINE LATERAL CONTROL ROD

(a) Install the No.1 bracket to the control rod.

Torque: 49 N–m (500 kgf–cm, 36 ft–lbf)

(b) Install the control rod in place and torque the No.1 bracket installation bolts.

Torque: 35 N–m (360 kgf–cm, 26 ft–lbf)

(c) Install and torque the No.2 bracket installation bolt.

Torque: 73 N–m (740 kgf–cm. 54 ft–lbf)

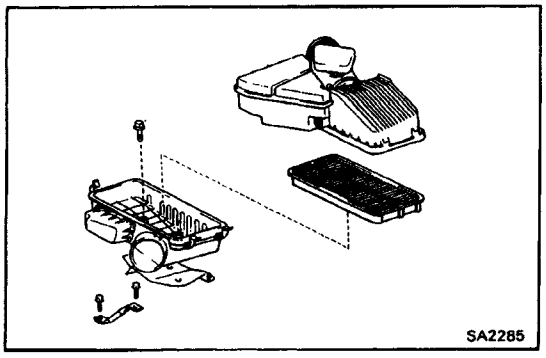

3. INSTALL LH ENGINE MOUNTING STAY

Torque:

No.2 bracket side 73 N–m (740 kgf–cm, 54 ft–lbf)

Body side 25 N–m (250 kgf–cm, 18 ft–lbf)

4. INSTALL AIR CLEANER ASSEMBLY

LOWER SUSPENSION ARM

SA0DS–01

COMPONENTS

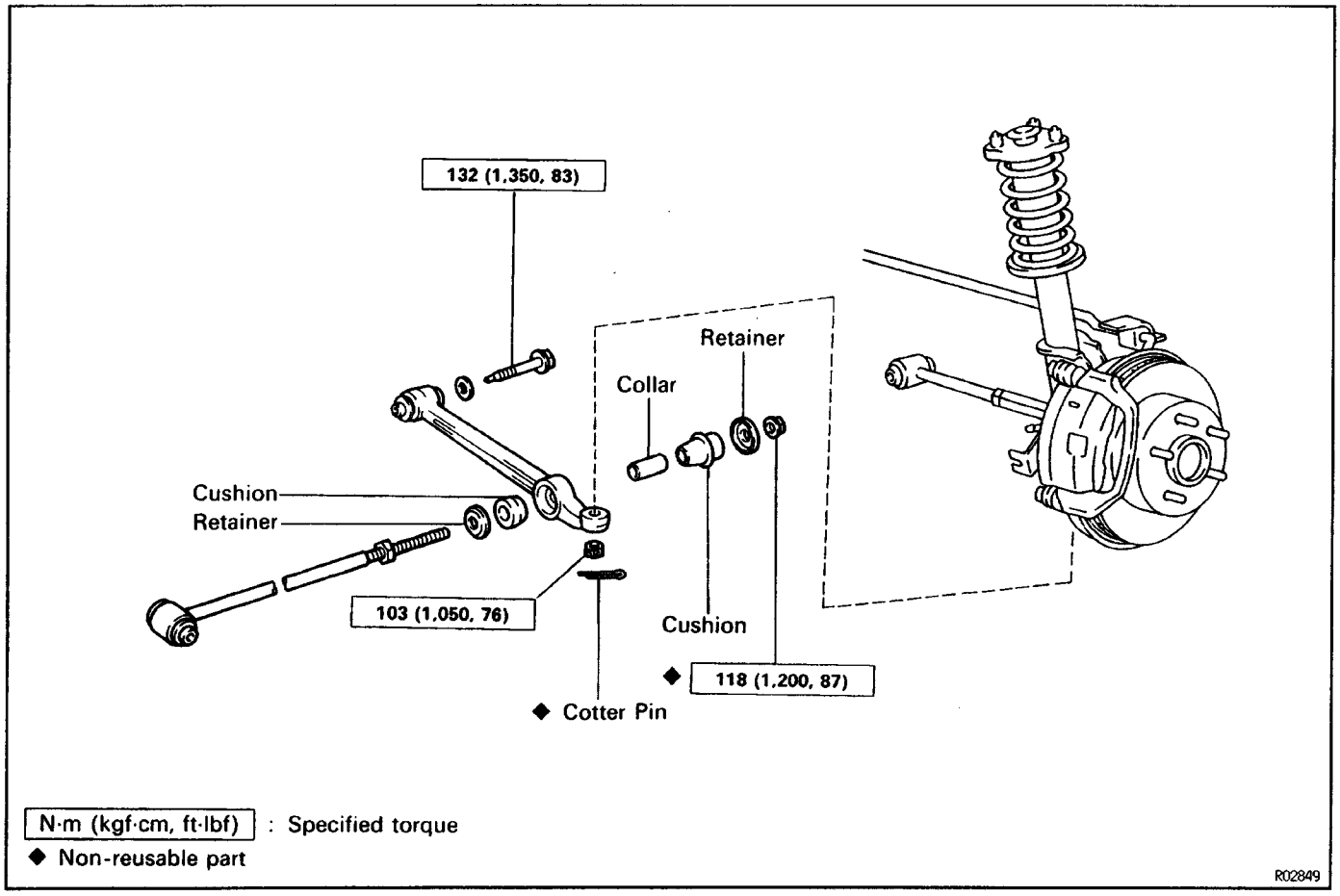

SA0DS–01

LOWER ARM REMOVAL

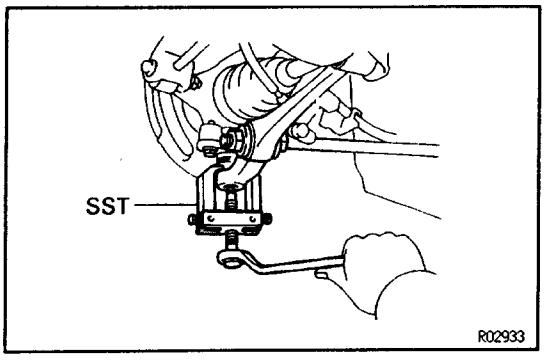

1. JACK UP VEHICLE AND REMOVE REAR WHEEL

2. DISCONNECT LOWER ARM FROM BALL JOINT

(a) Remove the cotter pin and nut.

(b) Using SST, disconnect the lower arm from the ball joint.

SST 09628–62011

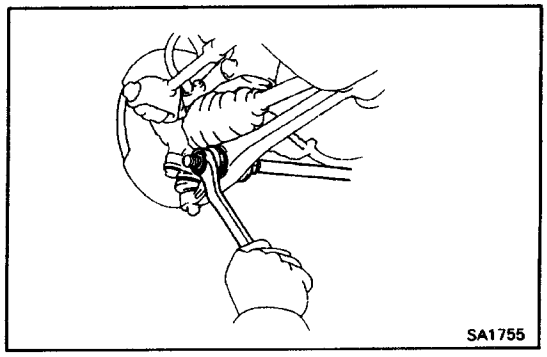

3. REMOVE STRUT BAR NUT AND RETAINER

Remove the strut bar nut and retainer from the lower arm.

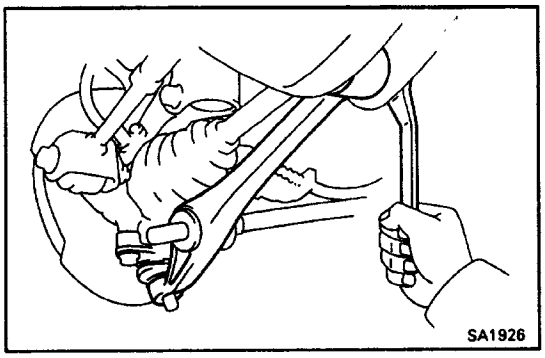

4. REMOVE LOWER ARM

(a) Remove the bolt holding the lower arm to the body and remove the lower arm.

(b) Remove the strut bar cushions, collar and retainer from the lower arm.

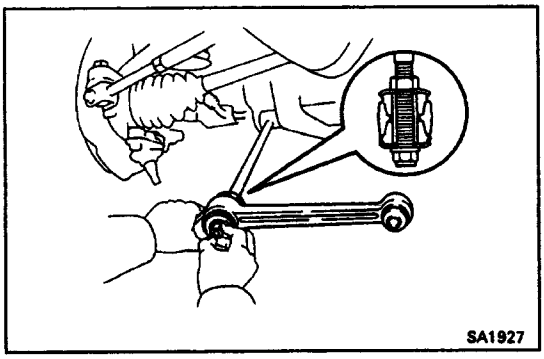

8A0D7–01

LOWER ARM INSTALLATION

1. INSTALL LOWER ARM

(a) Install the strut bar retainer, cushions, and collar to the strut bar.

(b) Connect the lower arm to the strut bar.

(c) Temporarily install a new strut bar nut.

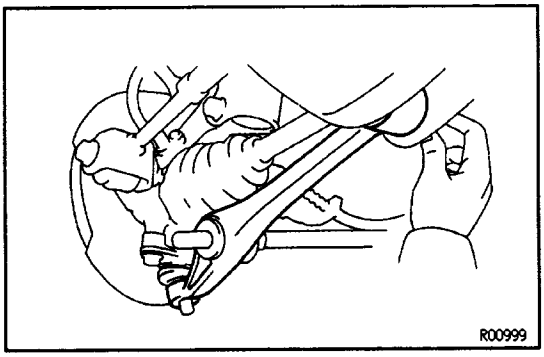

(d) Install the lower arm to the body. Do not torque the bolt.

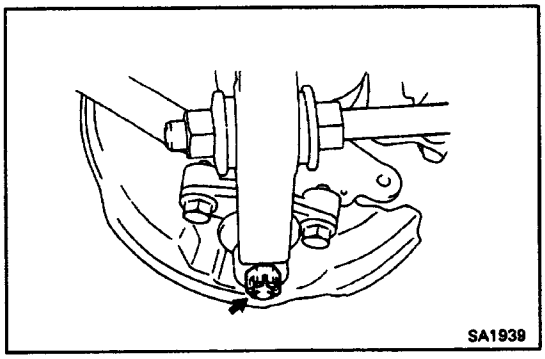

2. CONNECT LOWER ARM TO BALL JOINT

(a) Connect the lower arm to the ball joint.

(b) Install the nut.

Torque: 91 N–m (930 kgf–cm, 67 ft–lbf)

(c) Install a new cotter pin.

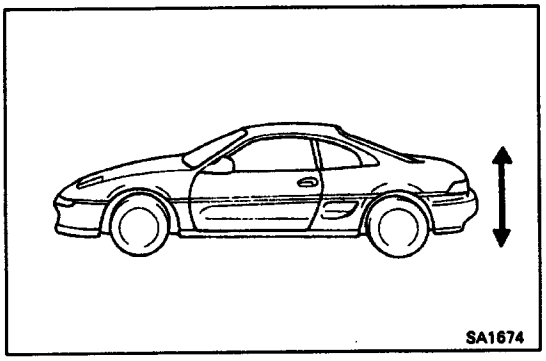

3. STABILIZE SUSPENSION

(a) Install the rear wheel and lower vehicle.

Torque: 103 N–m (1,050 kgf–cm, 76 ft–lbf)

(b) Bounce the vehicle up and down several times tc allow the suspension to settle.

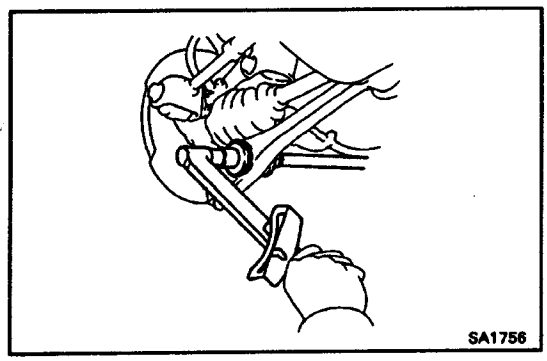

4. TORQUE LOWER ARM HOLDING NUT

(a) Torque the strut bar nut with the vehicle load applied on the suspension.

Torque: 118 N–m (1,200 kgf.cm, 87 ft.lbf)

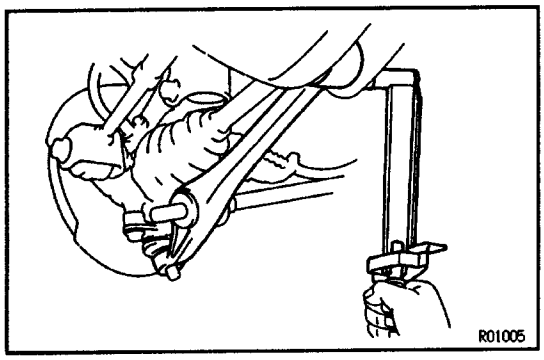

(b) Torque the lower arm holding nut with the vehicle load applied on the suspension.

Torque: 103 N–m (1,050 kgf–cm. 76 ft–lbf)

5. CHECK REAR WHEEL ALIGNMENT

(See page SA–3)

PREPARATION

SST (SPECIAL SERVICE TOOLS)

SA0CS–01

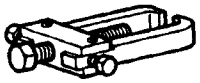	
 09720–00012 Shock Absorber Overhaul Tool Set	
 (09721–00071) Front Shock Absorber Ring Nut Wrench	
 09727–30020 Coil Spring Compressor	

SA0CT–01

RECOMMENDED TOOLS

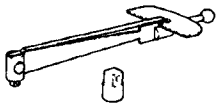 09025–00010 Small Torque Wrench	Small Torque Wrench

EQUIPMENT

SA0CU–01

Torque wrench

REAR SHOCK ABSORBER

SA0CV–01

COMPONENTS

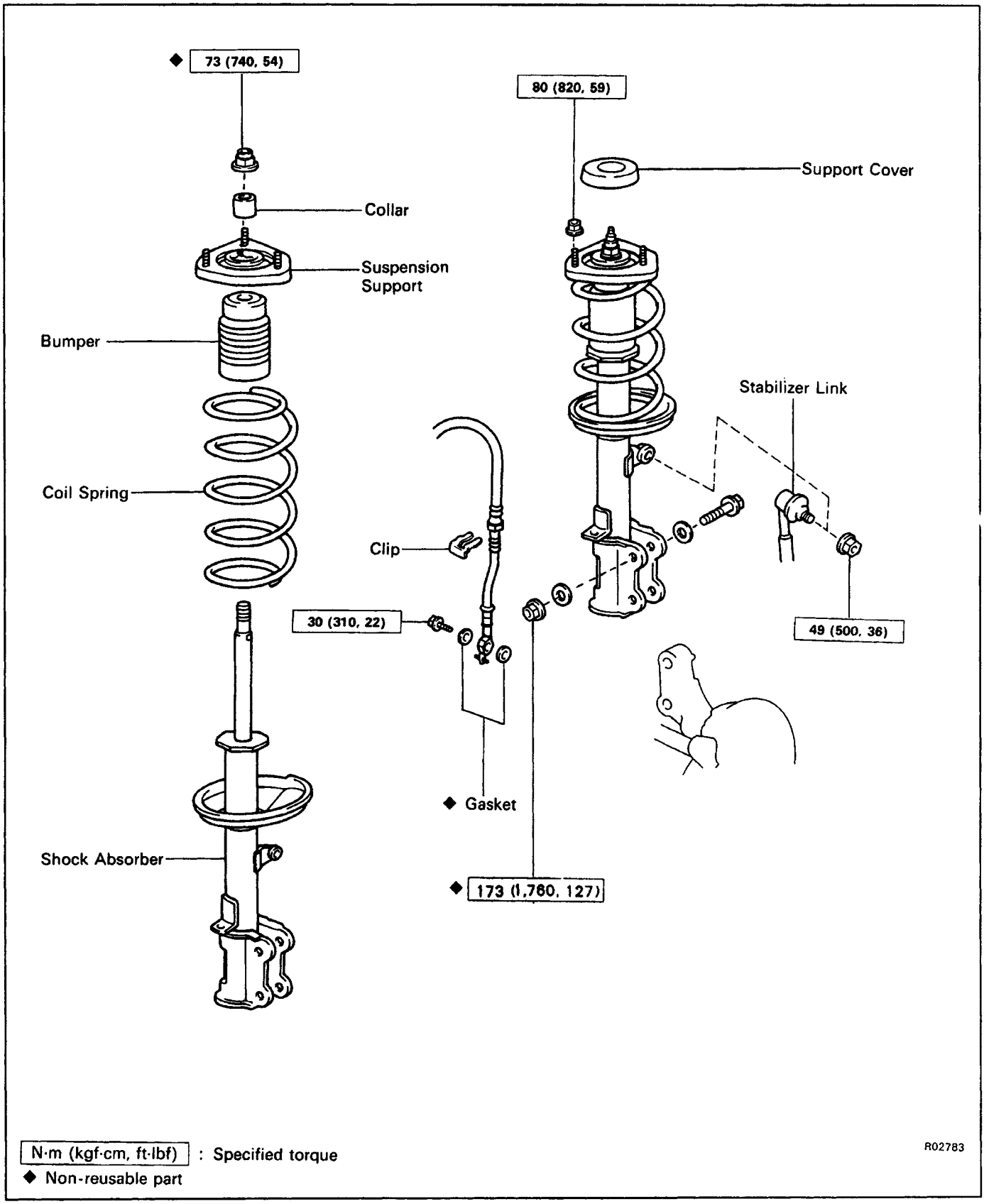

N·m (kgf·cm, ft·lbf) : Specified torque
◆ Non-reusable part

REAR SHOCK ABSORBER REMOVAL

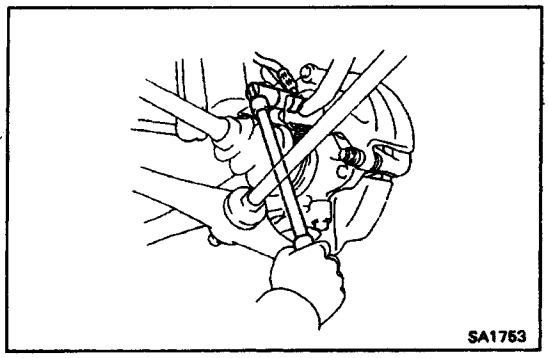

1. JACK UP VEHICLE AND REMOVE REAR WHEEL

2. DISCONNECT BRAKE HOSE

(a) Remove the union bolt and two gaskets and disconnect the brake hose.

(b) Drain the brake fluid into a container.

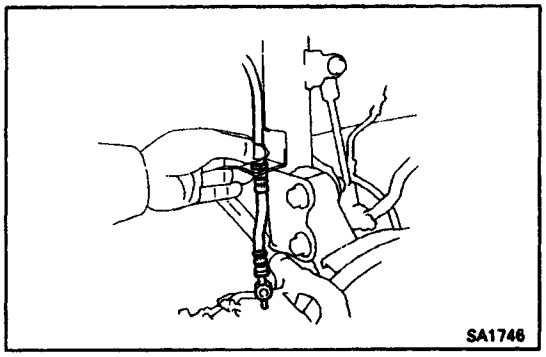

(c) Remove the clip and remove brake hose from the shock absorber.

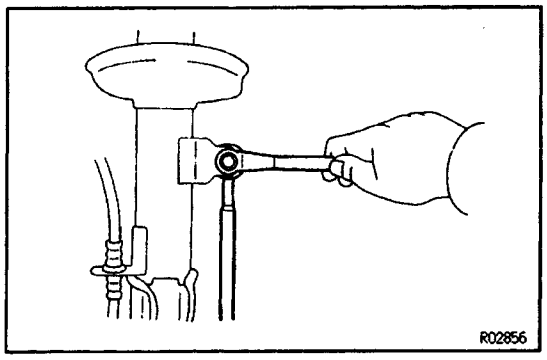

2. DISCONNECT STABILIZER LINK

Remove the nut and disconnect the stabilizer link.

HINT: If the ball joint stud turns together with the nut, use a hexagon wrench 5 mm (0.197 in.) to cold the: stud.

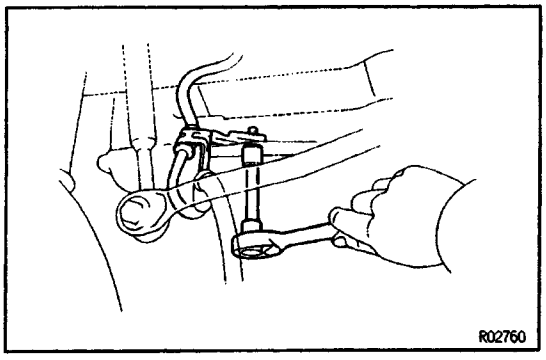

3. (w/ ABS)

REMOVE SPEED SENSOR WIRE HARNESS CLAMP:

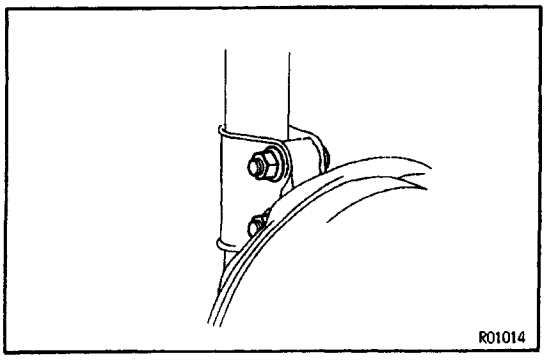

4. DISCONNECT REAR AXLE CARRIER FROM SHOCK ABSORBER

Loosen the bolts and nuts, and remove the nuts and washer.

HINT: Leave the bolts not to drop the axle carrier assembly.

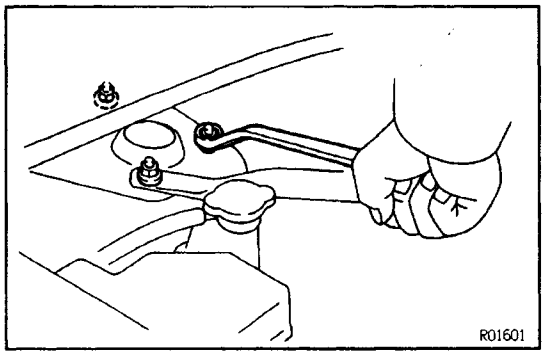

5. REMOVE SHOCK ABSORBER

(a) Remove the three suspension holding nuts.
(b) Remove the two upper bolts and remove the axle carrier assembly.
(c) Remove the shock absorber.

NOTICE: Cover the drive shaft boot with cloth to avoid damaging it.

REAR SHOCK ABSORBER DISASSEMBLY

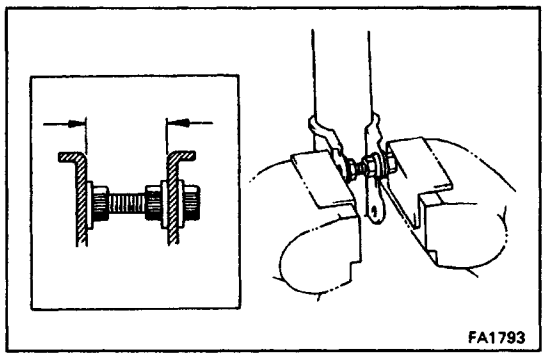

1. CLAMP SHOCK ABSORBER IN VISE

Install a bolt and two nuts to the bracket at the lower portion of the shock absorber shell and secure it in a vise.

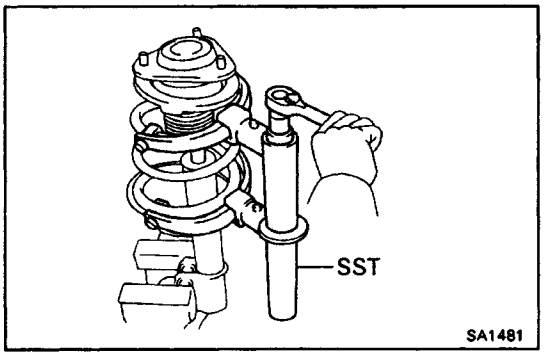

2. REMOVE OIL SPRING

(a) Using SST, compress the coil spring.
SST 09727–30020

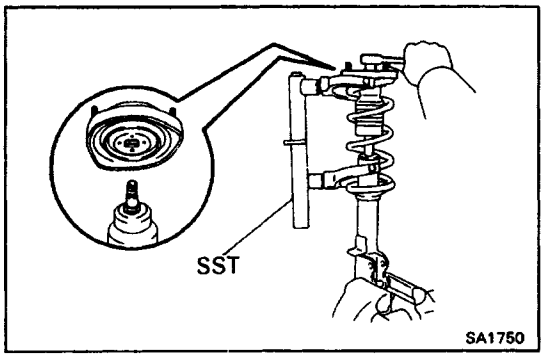

(b) Hold the octagon head of the suspension support in the vise.
(c) Remove the suspension support cover.
(d) Remove the suspension support nut.
(e) Remove the collar, suspension support, bumper and coil spring.

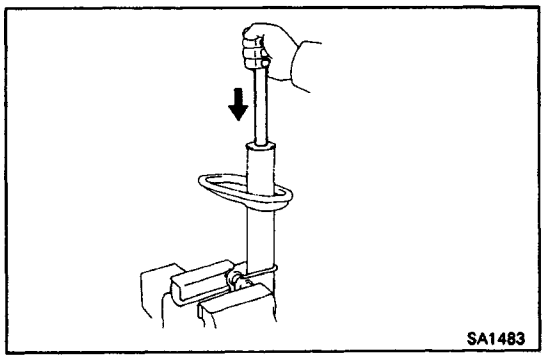

3. INSPECT OPERATION OF SHOCK ABSORBER

(a) While pushing the piston rod, check that the pull throughout the stroke is even, and that there is no abnormal resistance or noise.
(b) Push the piston rod fully and release it. Check that it returns at a constant speed.
If the absorber operation is defective, replace the absorber, as an assembly.

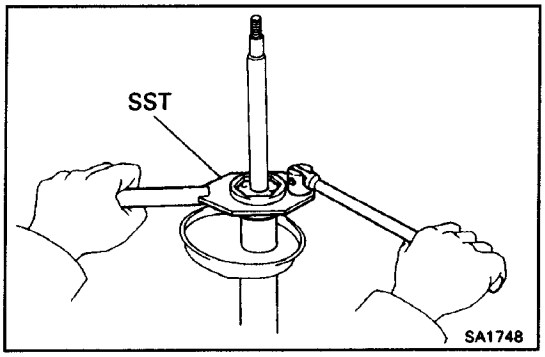

NOTICE: Before discarding the shock absorber, first loosen the ring nut 2 or 3 turns to release the gas completely.

SST 09720–00012 (09721–00071)

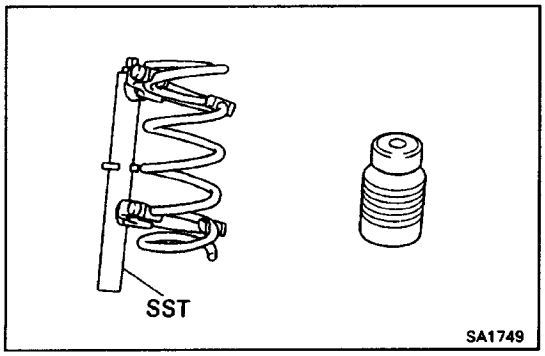

REAR SHOCK ABSORBER ASSEMBLY

SA0CY–01

1. INSTALL COIL SPRING

(a) Install the bumper to piston rod.

(b) Using SST, compress the coil spring.

SST 09727–30020

(c) Align the coil spring end with the lower seat hollow and install.

(d) Install the suspension support to piston rod.

HINT: Align the piston rod notch and the suspension support hole.

(e) Temporarily install a new suspension support nut.

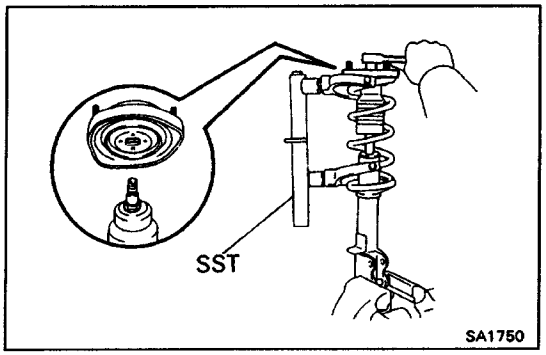

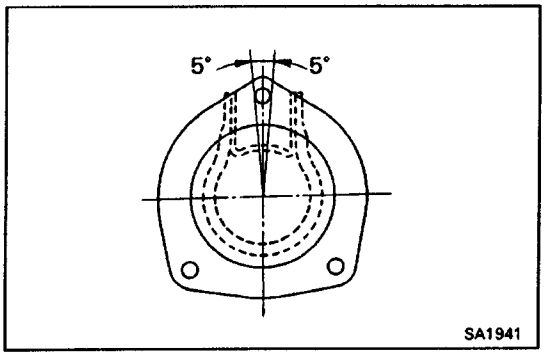

(f) Align the suspension support with the shock absorber lower bracket as shown.

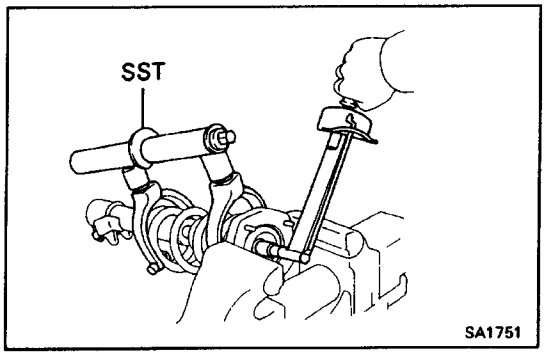

(g) Hold the octagon head of suspension support to the vise.

(h) Torque the suspension support nut.

Torque: 30 N–m (310 kgf–cm, 22 ft–lbf)

(i) Install the suspension support cover.

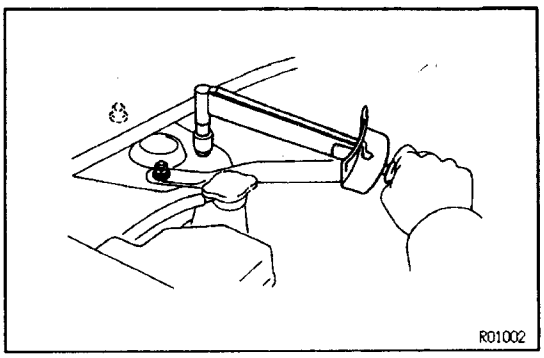

Ma:–o~

REAR SHOCK ABSORBER INSTALLATION

1. INSTAL SHOCK ABSORBER

Install the three nuts holding the shock absorber to the body. Torque the nuts.

Torque: 80 N–m (820 kgf–cm, 59 ft–lbf)

NOTICE: Be careful not to damage the drive shaft boot.

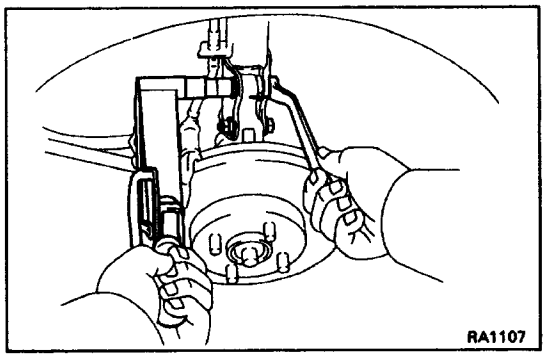

2. INSTALL REAR AXLE CARRIER TO SHOCK ABS–ORBER

(a) Connect the axle carrier to the shock absorber lower bracket.

(b) Install the washers and bolts from the rear side.

(c) Install the washers and nuts.

Torque: 173 N–m (1,760 kgf–cm, 127 ft–lbf)

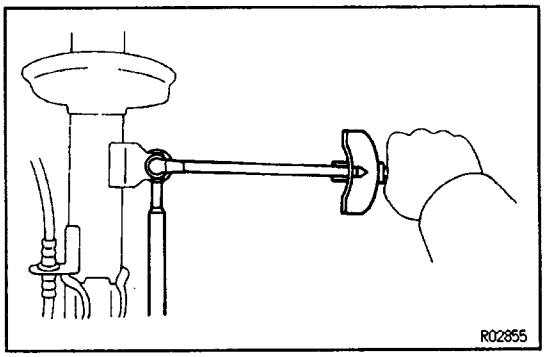

3. CONNECT STABILIZER LINK

Connect the stabilizer link with the nut.

Torque: 49 N–m (500 kgf–cm, 36 ft–lbf)

HINT: If the ball joint stud turns together with the nut, use a hexagon wrench 5 mm (0.197 in.) to hold the stud.

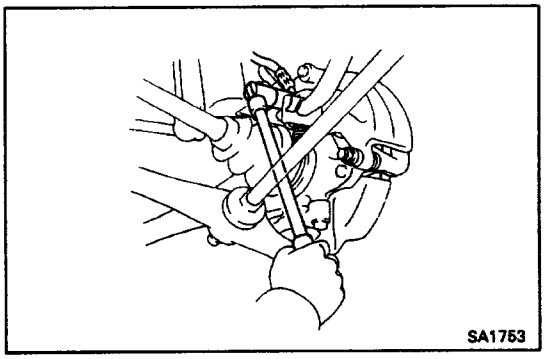

4. CONNECT BRAKE HOSE

(a) Install the brake hose and clip to the shock absorber.

(b) Install the union bolt and two gaskets and torque the union bolt.

Torque: 30 N–m (310 kgf–cm, 22 ft–lbf)

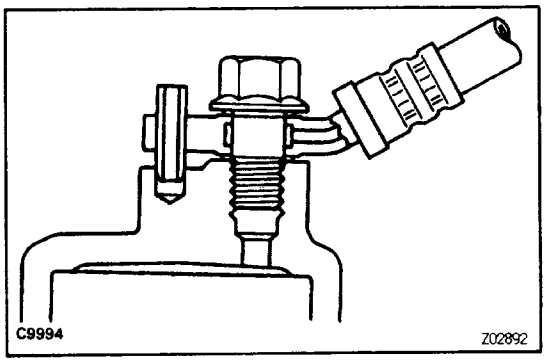

HINT: Install the flexible hose lock securely in the lock hole in the brake caliper.

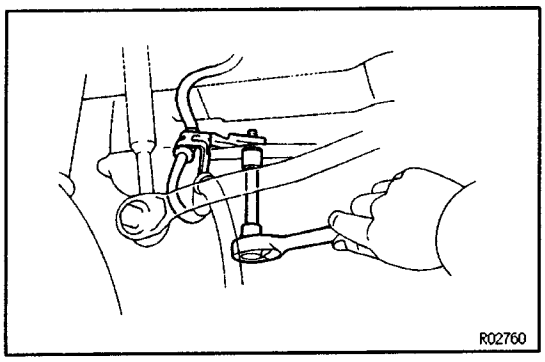

5. (w/ ABS)

INSTALL SPEED SENSOR WIRE HARNESS CLAMP

Install ABS speed sensor wire harness clamp to sus–pension crossmember wire harness with the bolt.

Torque: 5.4 N–m (55 kgf–cm, 48 in.–lbf)

6. BLEED BRAKE LINE

(See page BR–9**)**

7. INSTALL REAR WHEEL AND LOWER VEHICLE

Torque: 103 N–m (1,050 kgf–cm, 76 ft–lbf)

8. CHECK REAR WHEEL ALIGNMENT

STABILIZER BAR

SA0DG–01

COMPONENTS

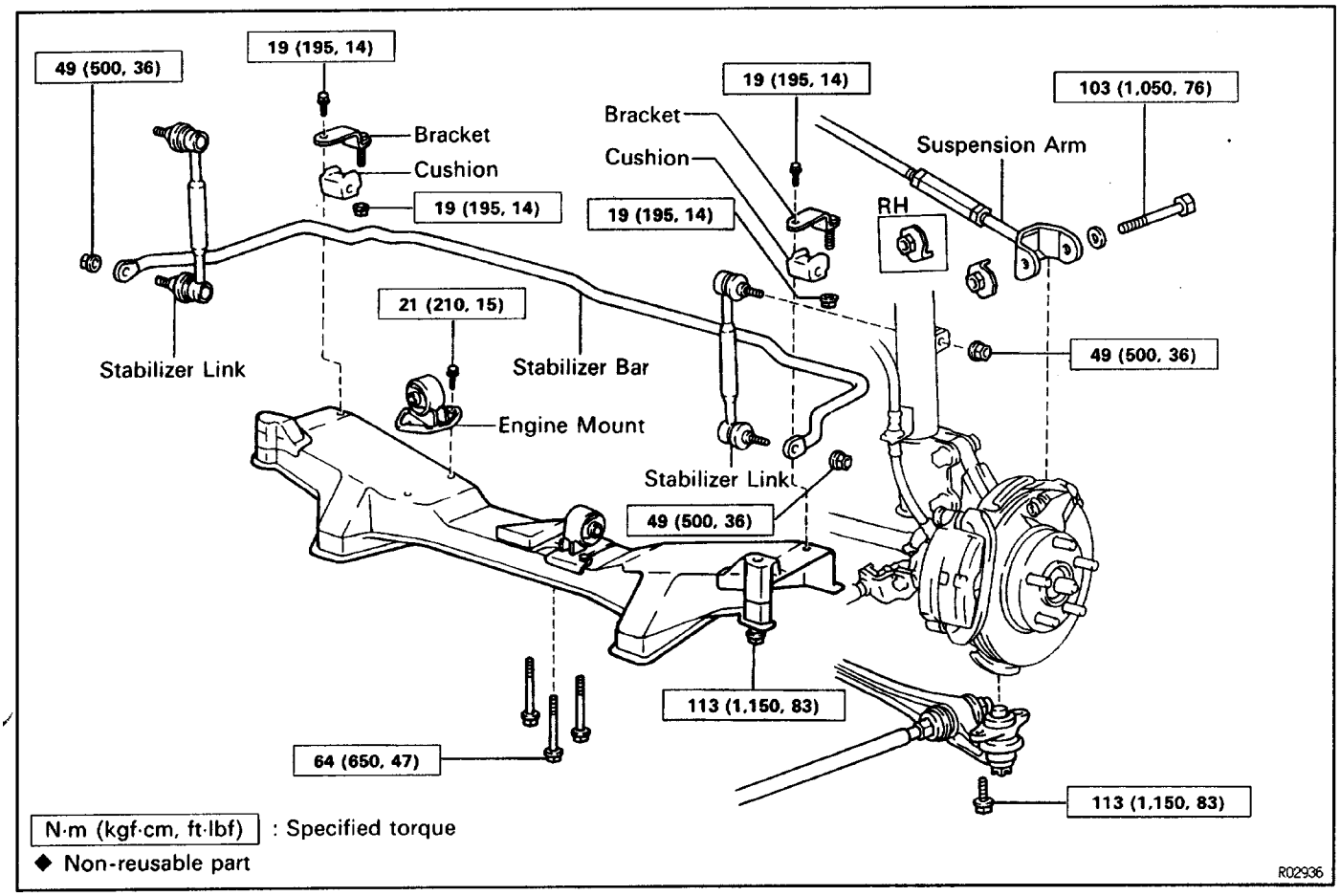

SA0DH–01

STABILIZER BAR REMOVAL

1. JACK UP VEHICLE AND REMOVE REAR WHEEL

2. DISCONNECT STABILIZER LINK FROM STABILIZER BAR

Remove the nuts and remove the stabilizer link from the stabilizer bar.

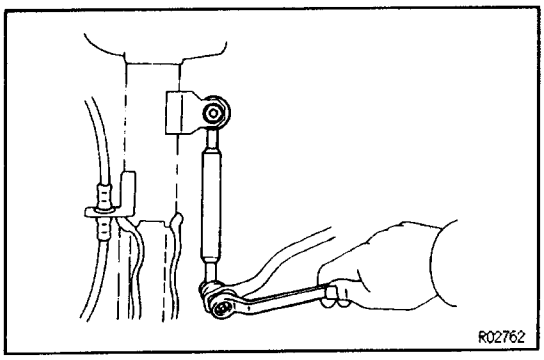

3. REMOVE STABILIZER LINK

Remove the stabilizer link from the shock absorber.

HINT: If the ball joint stud turns together with the nut, use a hexagon wrench 5 mm (0.197 in.) to hold the stud.

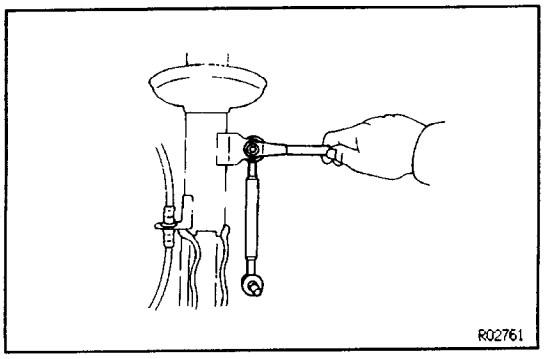

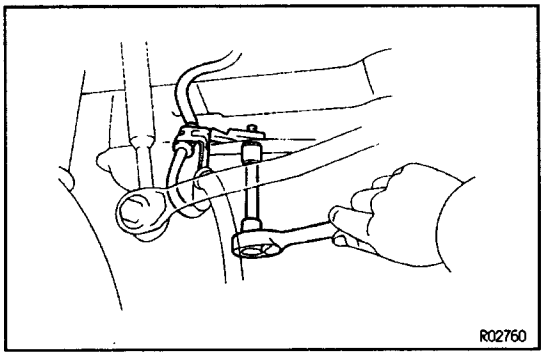

4. (w/ ABS)
REMOVE SPEED SENSOR BRACKET

Remove the bolt and disconnect the speed sensor bracket from the rear suspension crossmember.

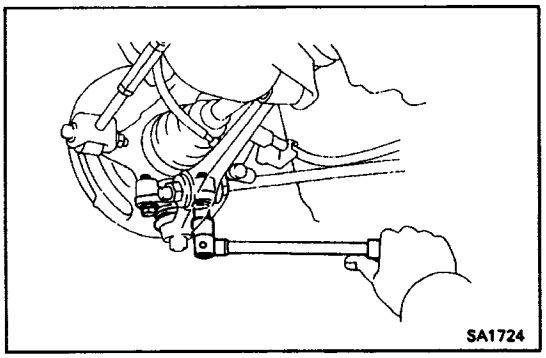

5. DISCONNECT REAR AXLE CARRIER FROM LOWER ARM

(a) Remove the two bolts holding the lower arm to ball joint.
(b) Disconnect the ball joint.

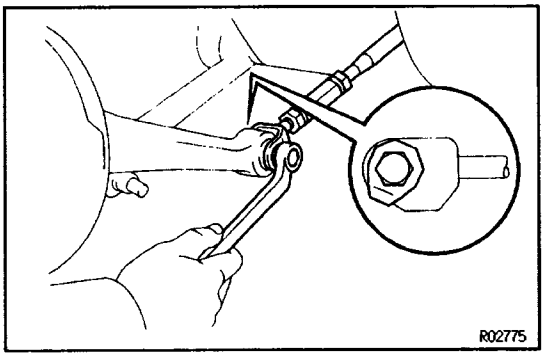

6. DISCONNECT REAR AXLE CARRIER FROM SUSPENSION ARM

Remove the nut and bolt, disconnect the suspension arm from axle carrier.

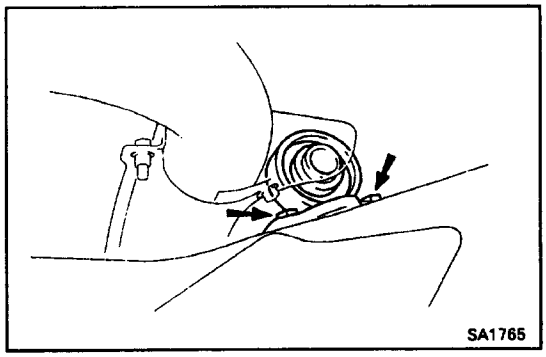

7. DISCONNECT EXHAUST PIPE MOUNTING FROM REAR SUSPENSION CROSSMEMBER

Remove the two exhaust pipe mounting installation bolts.

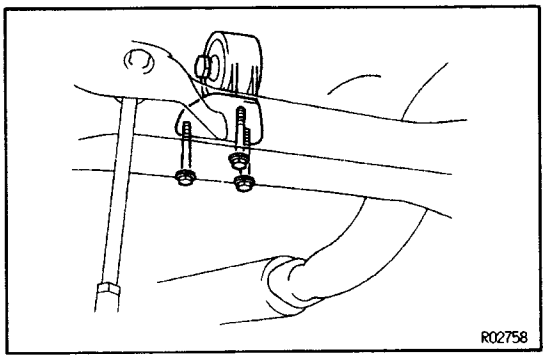

8. DISCONNECT REAR ENGINE MOUNT FROM REAR SUSPENSION CROSSMEMBER

Remove the three installation bolts of the rear engine mounting.

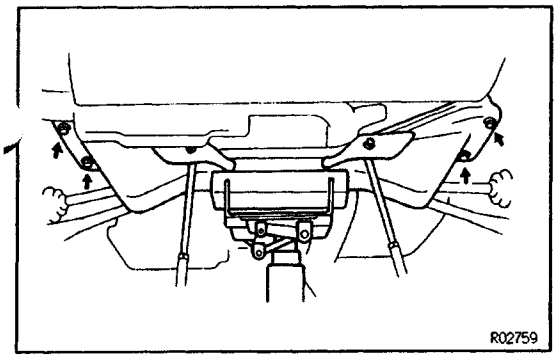

9. REMOVE SUSPENSION CROSSMEMBER MOUNTING BOLTS

(a) Hold the rear suspension crossmember with a jack.
(b) Remove the four bolts, then remove the rear suspension crossmember.

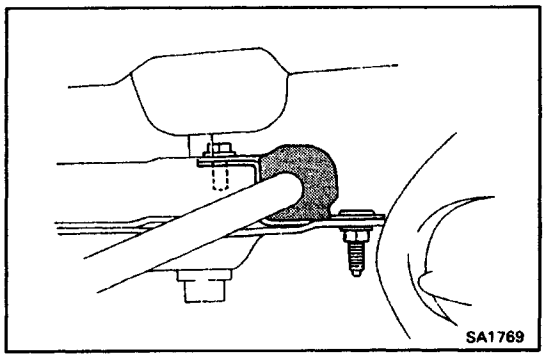

10. REMOVE STABILIZER BAR

(a) Lift down the crossmember until the front side bolt of the stabilizer bar bracket can be removed.
NOTICE: Be careful not to damage the exhaust pipe by shoving with the stabilizer bar.
(b) Remove the two bolts and two nuts.
(c) Remove the stabilizer bar with brackets.
(d) Remove the brackets and cushions from the stabilizer bar.

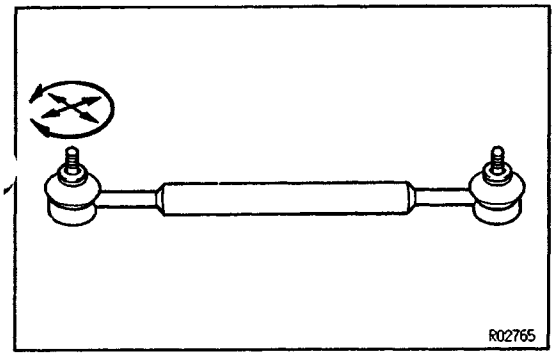

SA0DJ–01

STABILIZER LINK INSPECTION

INSPECT STABILIZER LINK

Rotate the ball joint arm in all directions, if the movement is not smooth and free, replace the stabilizer link.

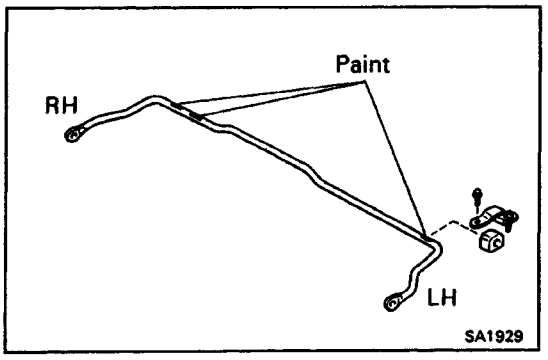

SA0DK–01

STABILIZER BAR INSTALLATION

1. INSTALL STABILIZER BAR

(a) Install the cushions and brackets touching the line painted on the stabilizer bar.
(b) Install the stabilizer bar to the rear suspension crossmember and tighten the bracket bolts.
Torque: 19 N–m (195 kgf–cm, 14 ft–lbf)

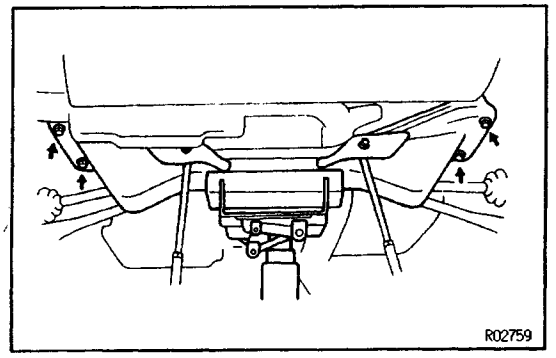

2. INSTALL SUSPENSION CROSSMEMBER

Install the suspension crossmember in place, then install and tighten the four bolts.
Torque: 113 N–m (1,150 kgf–cm, 83 ft–lbf)

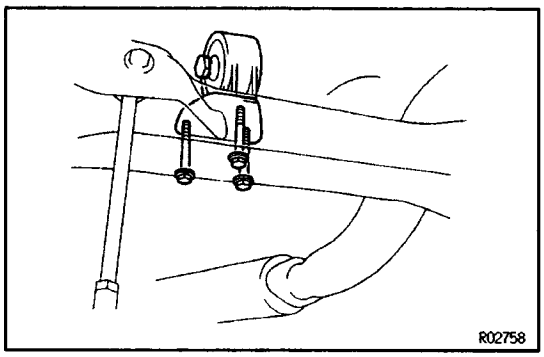

3. CONNECT REAR ENGINE MOUNTING TO REAR SUSPENSION CROSSMEMBER

Connect the engine mount to rear suspension cross–member in place with the three bolts.

Torque: 77 N–m (780 kgf–cm. 57 ft–lbf)

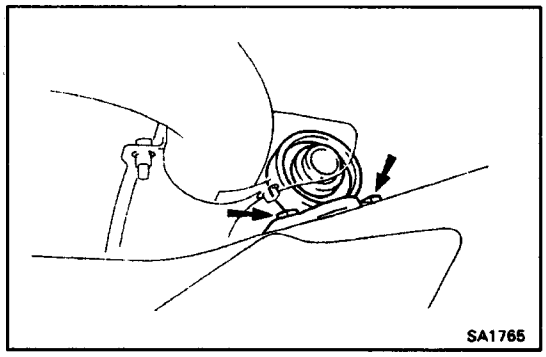

4. CONNECT EXHAUST PIPE MOUNTING TO REAR SUSPENSION CROSSMEMBER

Torque: 21 N–m (210 kgf–cm, 15 ft–lbf)

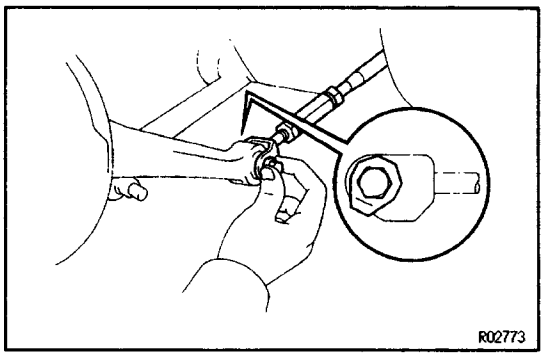

5. CONNECT SUSPENSION ARM TO REAR AXLE CARRIER

(a) Temporarily connect the suspension arm to the rear axle carrier with the bolt and nut.

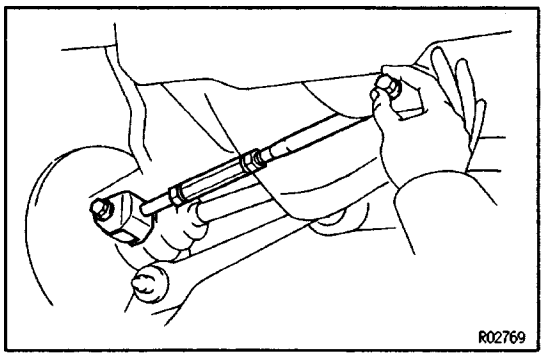

(b) Similarly connect the other side suspension arm.

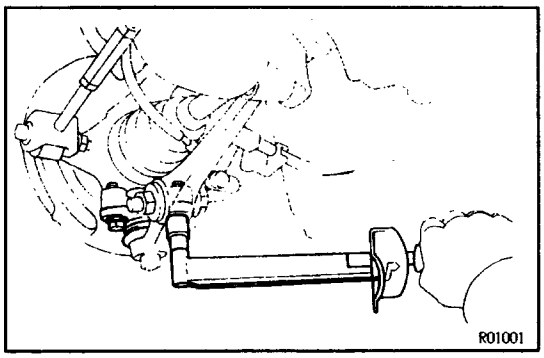

6. INSTALL REAR AXLE CARRIER TO LOWER ARM

Torque: 113 N–m (1,150 kgf–cm, 83 ft–lbf)

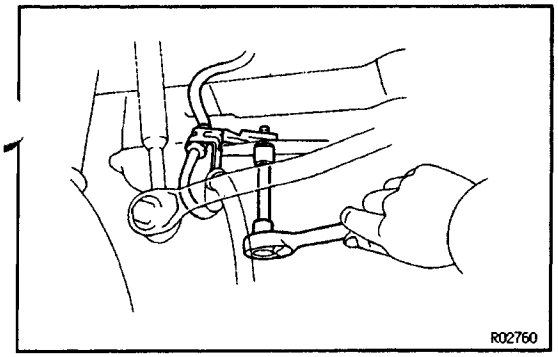

7. (w/ ABS)

INSTALL ABS SPEED SENSOR BRACKET TO REAR SUSPENSION CROSSMEMBER

Install the ABS speed sensor bracket to the rear suspension crossmember.

Torque: 5.4 N–m (55 kgf–cm, 48 in. ·lbf)

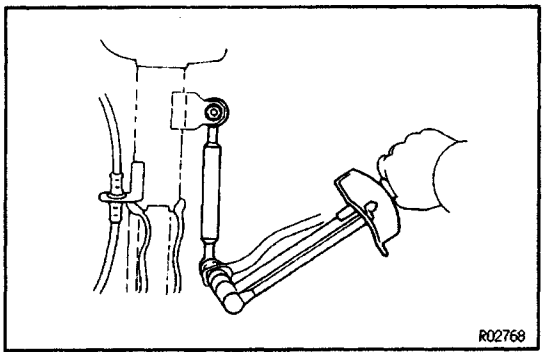

8. INSTALL STABILIZER LINK

Install the stabilizer link with the nuts.

Torque: 49 N–m (500 kgf–cm, 36 ft–lbf)

HINT: If the ball joint stud together with the nut, use hexagon wrench 5 mm (0.197 in.) to hold the stud.

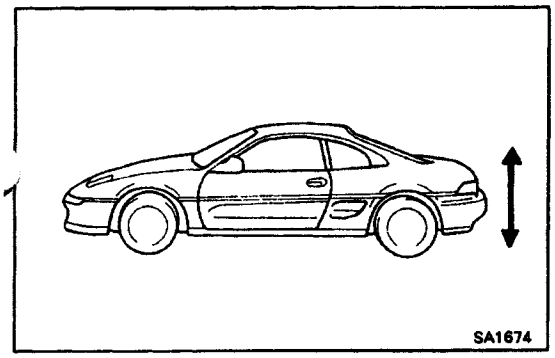

9. STABILIZE SUSPENSION

(a) Install rear wheel and lower vehicle.

Torque: 103 N–m (1,050 kgf–cm, 76 ft–lbf)

(b) Bounce the vehicle up and down several times to allow the suspension to settle.

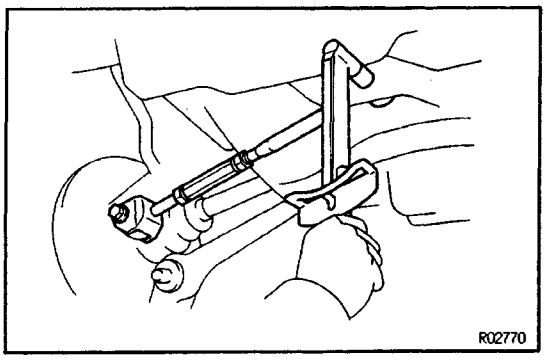

10. TORQUE SUSPENSION ARM INSTALLATION BOLTS

(a) Torque the body side mounting bolt with the vehicle load applied on the suspension.

Torque: 103 N–m (1,050 kgf–cm, 76 ft–lbf)

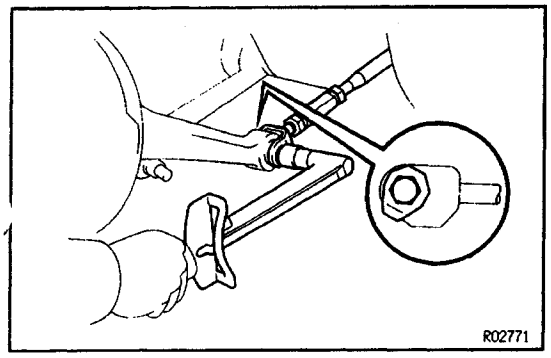

(b) Torque the axle carrier side mounting bolt and nut with the vehicle load applied on the suspension.

Torque: 103 N–m (1,050 kgf–cm, 76 ft–lbf)

11. CHECK REAR WHEEL ALIGNMENT

(See page SA–3)

STRUT BAR

SA0D8-01

COMPONENTS

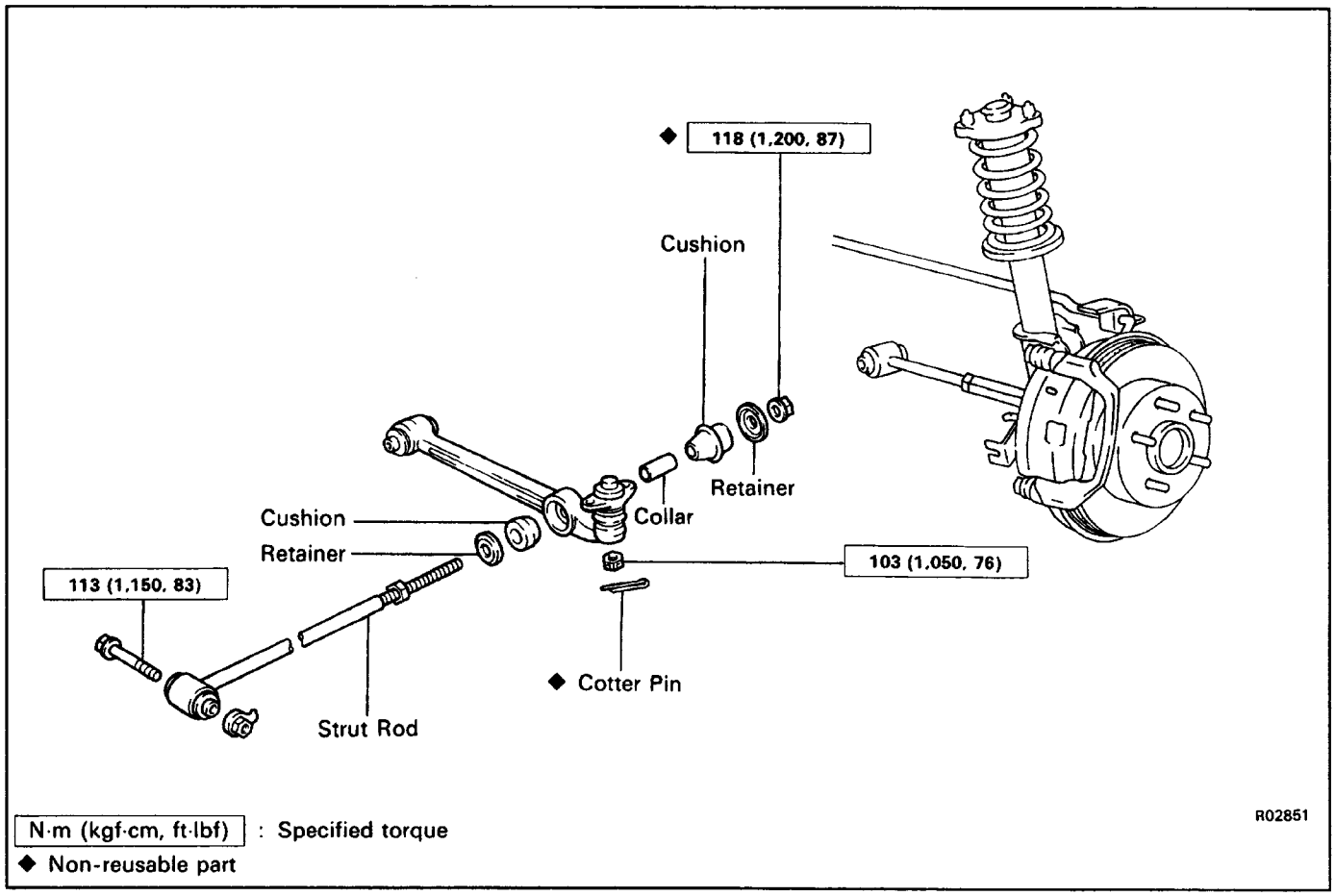

N·m (kgf·cm, ft·lbf) : Specified torque
◆ Non-reusable part

SA0D9-01

STRUT BAR REMOVAL

1. JACK UP VEHICLE AND REMOVE REAR WHEEL

2. REMOVE STRUT BAR NUT AND RETAINER

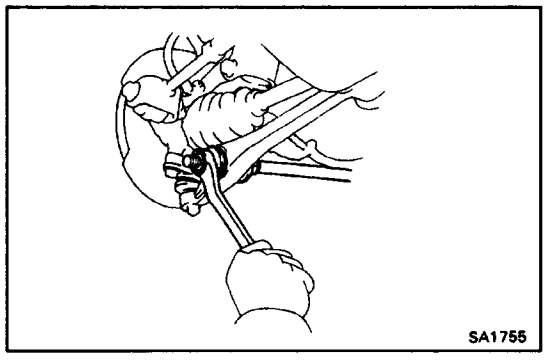

3. REMOVE STRUT BAR

(a) Remove the strut bar holding nut and bolt.

(b) Remove the cushion collar and retainer from the strut bar.

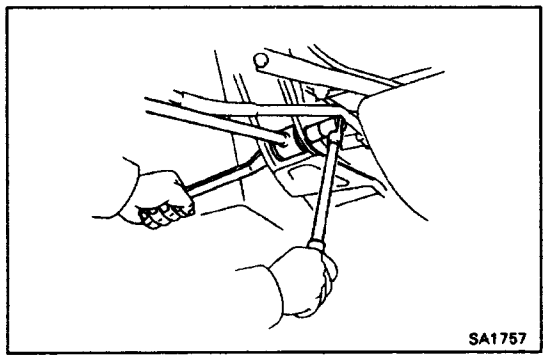

SA0DA–01

STRUT BAR INSTALLATION

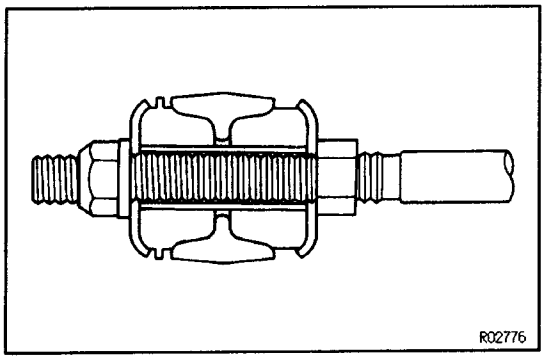

1. INSTALL REAR SUSPENSION ARM NO.1

(a) Install the retainers, cushions, collar and suspension arm No. 1 to the strut bar with the nuts as shown.
NOTICE:
- **Install the nut to the bolt end.**
- **Do not misinstall the front and rear cushions.**

(b) Temporarily install the strut bar to the lower arm.

(c) Temporarily install the strut bar holding bolt, nut and cush ion to the body.

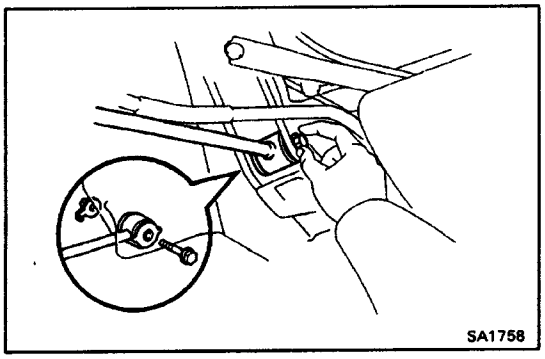

2. INSTALL STRUT BAR INSTALLATION NUT

Install the strut bar installation nut of the lower arm side.

Torque: 118 N–m (1,200 kgf–cm, 87 ft–lbf)

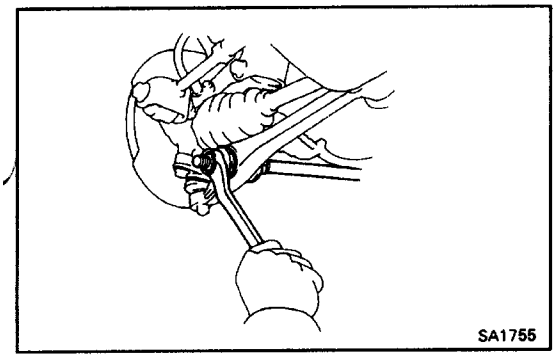

3. STABILIZE SUSPENSION

(a) Install the rear wheel and lower the vehicle.
Torque: 103 N–m (1,050 kgf–cm, 76 ft–lbf)

(b) Bounce the vehicle up and down several times to allow the suspension settle.

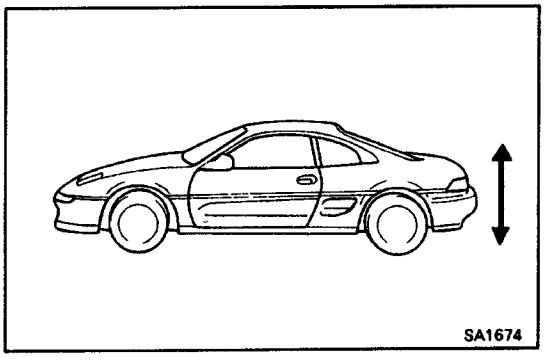

4. TORQUE STRUT BAR INSTALLATION BOLT

Torque the strut bar installation bolt of the body side with the vehicle load applied on the suspension.

Torque: 178 N–m (1,200 kgf–cm, 87 ft–lbf)

5. CHECK REAR WHEEL ALIGNMENT

(See page SA–3)

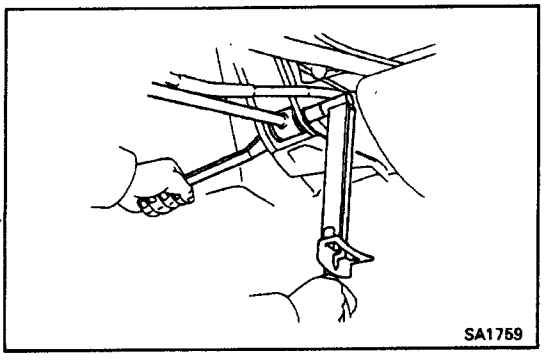

SUSPENSION ARM

SA0DB–01

COMPONENTS

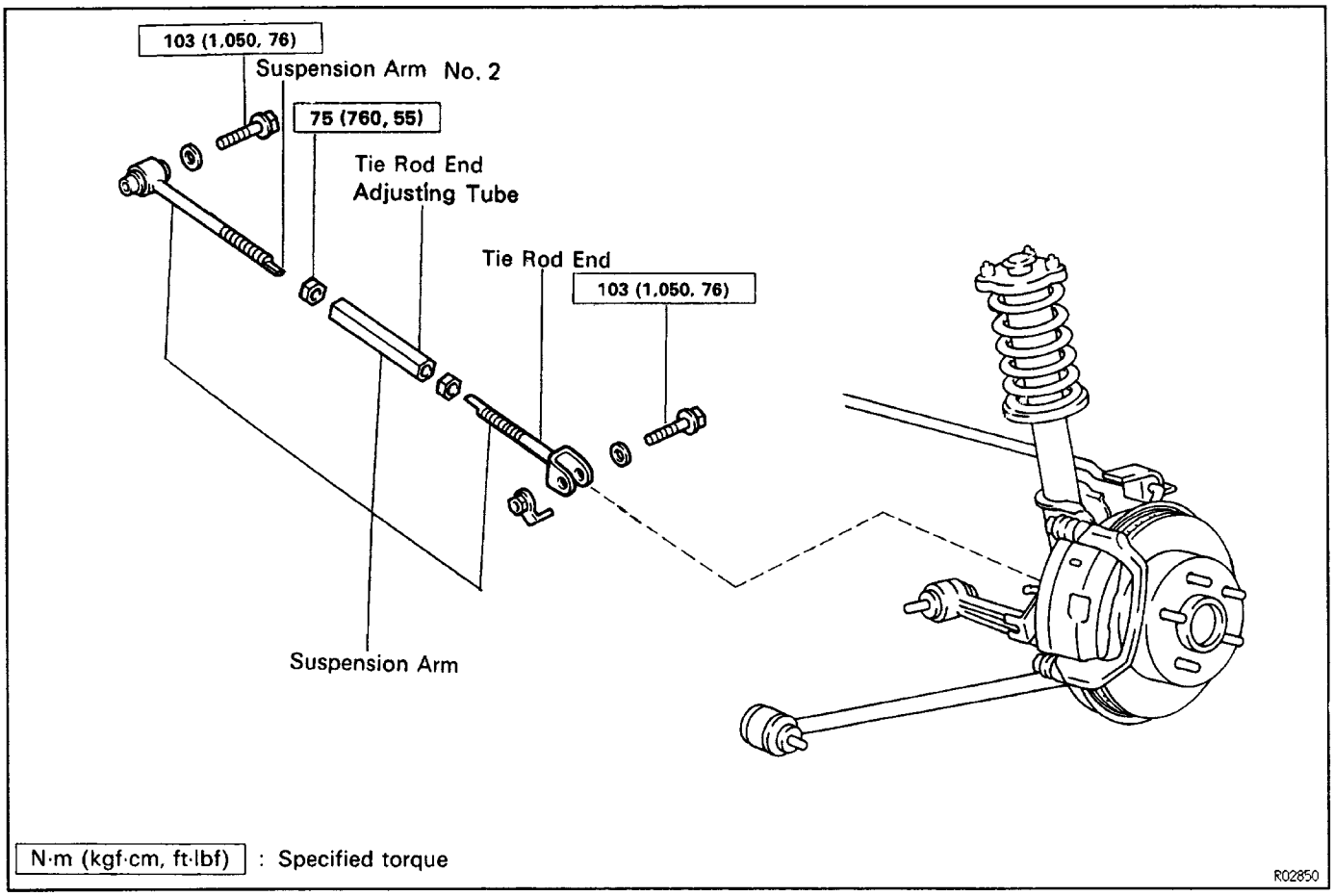

SA0DC–01

SUSPENSION ARM REMOVAL

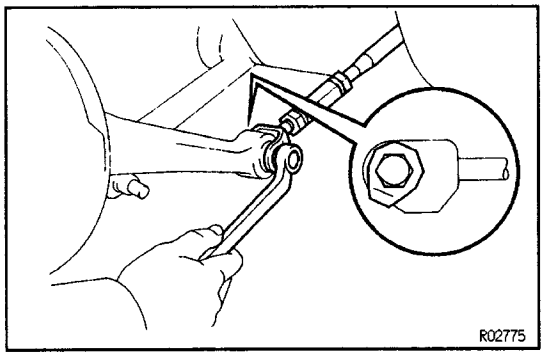

1. JACK UP VEHICLE AND REMOVE REAR WHEEL

2. DISCONNECT SUSPENSION ARM

Loosen the nut and bolt.

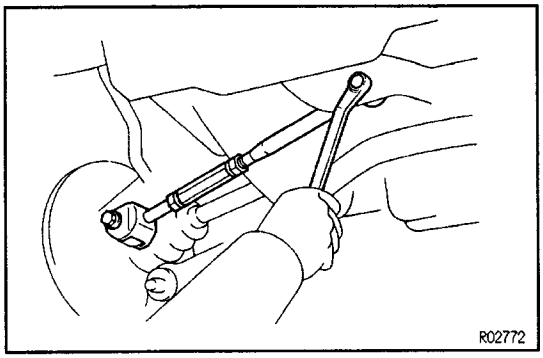

3. REMOVE SUSPENSION ARM FROM BODY

(a) Remove the suspension arm holding bolt.

(b) Disconnect the suspension arm from the body.

(c) Remove the nut, bolt and suspension.

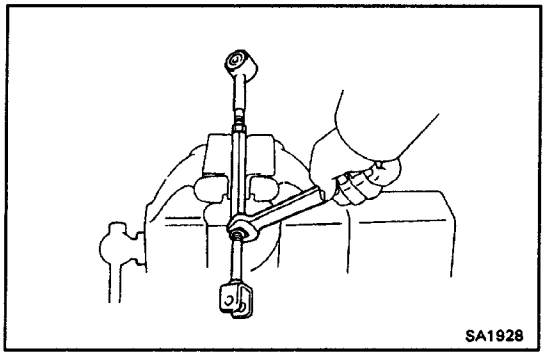

SUSPENSION ARM DISASSEMBLY

SA0DD–01

DISASSEMBLE SUSPENSION ARM

(a) Loosen the tie rod adjusting tube two nuts.
(b) Turn the tie rod adjusting tube, and remove the tie rod adjusting tube, and remove the tie rod end and the suspension arm No.2.

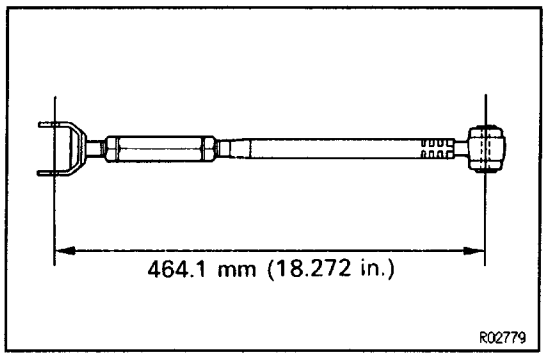

SUSPENSION ARM ASSEMBLY

SA0DE–01

INSTALL TIE ROD END AND SUSPENSION ARM NO. 2 TO TIE ROD TUBE

(a) Install the tie rod adjusting tube, tie rod adjusting tube nuts, tie rod end and rear suspension arm No. 2.
(b) Adjust the rear suspension arm.
(c) Temporarily tighten the tie rod adjusting tube nut.

HINT: Fully tighten after adjusting the rear wheel alignment.

SUSPENSION ARM INSTALLATION

SA0DF–01

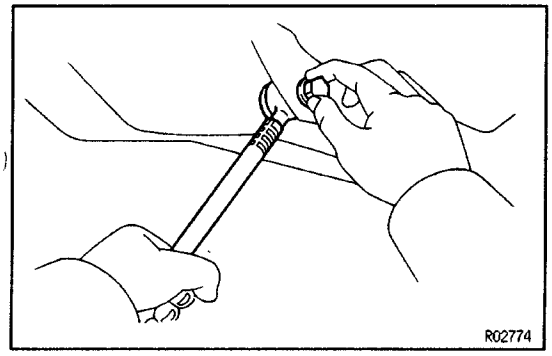

1. INSTALL SUSPENSION ARM TO BODY

Temporarily connect the suspension arm to the body with the bolt.

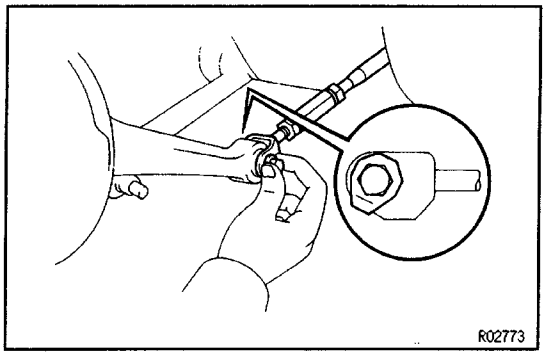

2. INSTALL SUSPENSION ARM TO REAR AXLE CARRIER

Temporarily install the suspension arm to the rear axle carrier with the bolt and nut.

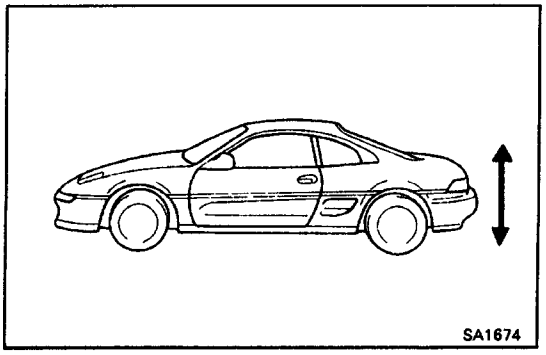

3. STABILIZE SUSPENSION

(a) Install the wheel and lower the vehicle.
Torque: 103 N–m (1,050 kgf–cm, 76 ft–lbf)
(b) Bounce the vehicle up and down several times to allow the suspension to settle.

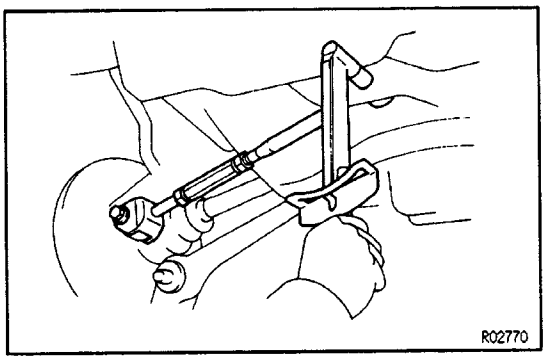

4. TORQUE SUSPENSION ARM MOUNTING BOLTS AND NUT

(a) Torque the body side mounting bolts with the vehicle load applied on the suspension.

Torque: 103 N–m (1,050 kgf–cm, 76 ft–lbf)

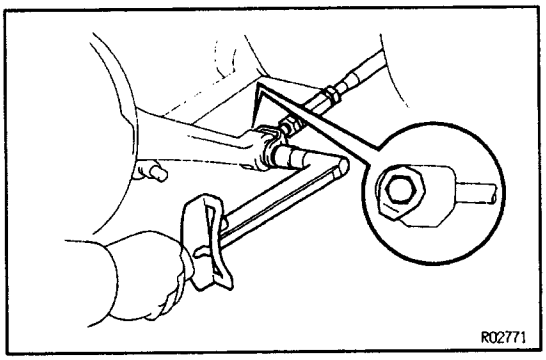

(b) Torque the carrier side mounting bolts with the vehicle load applied on the suspension.

Torque: 103 N–m (1,050 kgf–cm, 76 ft–lbf)

5. CHECK REAR WHEEL ALIGNMENT

(See page SA–3**)**

SERVICE SPECIFICATIONS

SA00P–01

SERVICE DATE

Cold tire inflation pressure kPa (kgf/cm^2, psi)	Tire size		Front	Rear
	195/55R15 83V		200 (2.0, 29)	–
	225/50R15 91V		–	230 (2.3, 33)
Chassis ground clearance mm (in.)	All models		216.5 (8.524)	193.4 (7.614)
Front wheel alignment	Toe–in Tie rod end length left–right error		1 ± 2 mm (0.04 ± 0.08 in.), 0.1° ± 0.2° 1.0 mm (0.039 in.) or less	
	Camber Cross camber		–1°00′ ± 45′ 30′ or less	
	Caster Cross caster		2°50′ ± 45′ 30′ or less	
	Steering axis inclination		13°50′ ± 45	
	Wheel angle (Maximum)	Outside wheel	32°00′	
		Inside wheel	37°00′ ± 1°30′	
Rear wheel alignment	Toe–in Tie rod end length left–right error		6 ± 1 mm (0.24 ± 0.04 in.), 0.6° ± 0.1° 1.0 mm (0.039 in.) or less	
	Camber Cross camber		–1°35′ ± 45′ 30′ or less	
Wheel lateral runout	Less than 1.4 mm (0.055 in.)			
Front axle and suspension	Hub bearing axial direction Ball joint rotation condition Ball joint vertical play Strut bar length	Limit	0.5 mm 0.8 – 2.5 N·m (8 – 25 kgf·cm, 7 – 22 in.·lbf) 0 mm 362 mm	0.0020 in. 0 in. 14.25 in.
Rear axle and suspension	Hub bearing axial direction Ball joint rotation condition Ball joint vertical play Drive shaft grease capacity Outboard joint 5S–FE engine 3S–GTE engine Inboard joint 5S–FE engine 3S–GTE engine Side gear shaft 3S–GTE engine Drive shaft standard length 5S–FE engine 3S–GTE engine	Limit LH RH LH RH	0.5 mm 0.05 – 0.98 N·m (0.5 – 10 kgf·cm, 0.43 – 8.68 in.·lbf) 0 mm 120 – 130 g 120 – 130 g 232 – 242 g 90 – 100 g 43 – 53 g 540.3 ± 5.0 mm 831.4 ± 5.0 mm 389.7 ± 5.0 mm 389.7 ± 5.0 mm	0.0020 in. 0 in. 0.26 – 0.29 lb 0.26 – 0.29 lb 0.51 – 0.53 lb 0.20 – 0.22 lb 0.09 – 0.12 lb 21.272 ± 0.197 in. 32.732 ± 0.197 in. 15.343 ± 0.197 in. 15.343 ± 0.197 in.

SA0DQ–01

TORQUE SPECIFICATIONS (FRONT)

Part tightened	N–m	kgf–cm	ft–lbf
Disc brake dust cover x Steering knuckle	8.3	85	74 in.·lbf
Axle hub lock nut	123	1,250	90
Tie rod end x Steering knuckle	49	500	36
Ball joint x Steering knuckle	80	820	59
ABS speed sensor x Steering knuckle (w/ABS)	7.8	80	69 in.·lbf
Steering knuckle x Shock absorber	173	1,760	127
Brake caliper x Steering knuckle	59	600	43
Piston rod x Suspension support	49	500	36
Suspension support x Body	39	400	29
Brake hose x Disc brake caliper	30	310	22
Stabilizer link x Shock absorber	64	650	47
Lower arm x Ball joint	78	800	58
Strut bar x Lower arm	127	1,300	94
Lower arm x Body	118	1,200	87
Stabilizer bar x Body	64	650	47
Stabilizer bar x Stabilizer link	64	650	47
Strut bar x Body	113	1,150	83
Hub nut	103	1,050	76

(REAR)

Part tightened	N–m	kgf–cm	ft–lbf
Axle carrier x Shock absorber	173	1,760	127
Axle carrier x Tie rod end	103	1,050	76
Axle carrier x Lower arm	113	1,150	83
Stabilizer link x Shock absorber	49	500	36
ABS speed sensor x Axle carrier	7.8	80	69in.·lbf
Disc brake caliper x Axle carrier	59	600	43
Hub bearing lock nut (5S–FE engine)	226	2,300	166
Hub bearing lock nut (3S–GTE engine)	294	3,000	217
Axle carrier x Ball joint	113	1,150	83
Bearing bracket stay x Engine	75	770	56
Bearing bracket stay x Bearing bracket	75	770	56
Bearing bracket x Drive shaft center bearing	32	330	24
Bearing bracket' x Engine	64	650	47
Drive shaft inboard joint holding hexagon bolts	65	660	48
Piston rod x Suspension support	73	740	54
Suspension support x Body	80	820	59
Brake hose x Disc brake caliper	30	310	22
ABS speed sensor wire harness x Suspension cross member	5.4	55	48 in.·lbf
Lower arm x Ball joint	91	930	67
Lower arm holding nut	132	1,350	98
Strut rod nut	118	1,200	87

Strut rod x Body	118	1,200	87
Suspension arm x Body	103	1,050	76
Stabilizer bar x Body	19	195	14
Suspension cross member x Body	113	1,150	83
Engine mount x Suspension cross member	77	790	57
Exhaust pipe x Suspension cross member	21	210	15
Stabilizer bar x Stabilixer link	49	500	36

SUSPENSION AND AXLE

TROUBLESHOOTING

You will find the troubles easier using the table well shown below. In this table, each number shows the priority of causes in troubles. Check each part in order. If necessary, replace these parts.

See Page / Parts Name / Trouble	–	SA–3	SA–3	SA–21, 88	SA–35, 105	SA–21, 88	SA–27, 94	SA–10, 41		–	–	–	–
	Tires	Cold tire inflation pressure	Wheel alignment	Springs	Stabilizer bar	Shock absorber	Ball joint	Hub bearings	Steering linkage	Steering gear	Suspension parts	Overloaded	Wheel balance
Wander/pulls	1		2					4	3	5	6		
Bottoming				2		3						1	
Sways/pitches	1				2	3							
Front wheel shimmy	1		4			3	5	6	7	8			2
Abnormal tire wear		1	2			4					3		

V00313

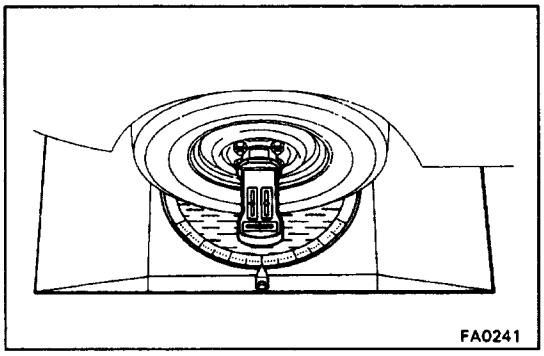
FA0241

FRONT WHEEL ALIGNMENT

FRONT WHEEL ALIGNMENT INSPECTION AND ADJUSTMENT

1. INSTALL WHEEL ALIGNMENT EQUIPMENT

Follow the specific instructions of the equipment manufacturer.

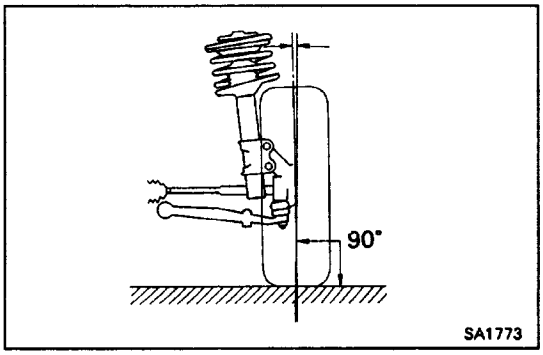

SA1773

2. INSPECT CAMBER

Camber:

–1°00±45'

Cross camber:

30' or less

HINT: Camber is not adjustable, if measurement is not within specification, inspect and replace the suspension parts as necessary.

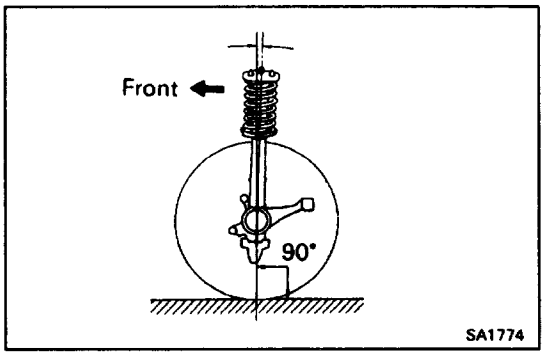

SA1774

3. INSPECT CASTER

Caster:

2°50'±45'

Cross caster:

30' or less

HINT: Caster is not adjustable, if measurement is not within specification, inspect and replace the suspen–sion parts as necessary.

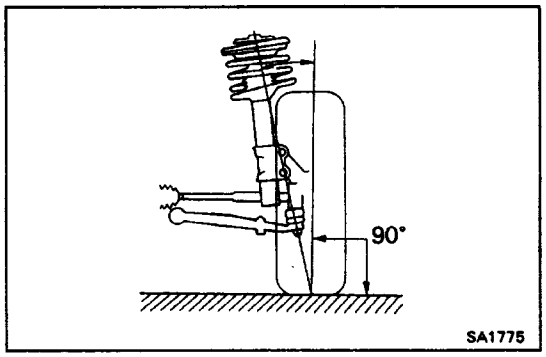

SA1775

4. INSPECT STEERING AXIS INCLINATION

Steering axis inclination:

13°50'±45'

HINT: Steering axis inclination is not adjustable, if measurement is not within specification, inspect and replace the suspension parts as necessary.

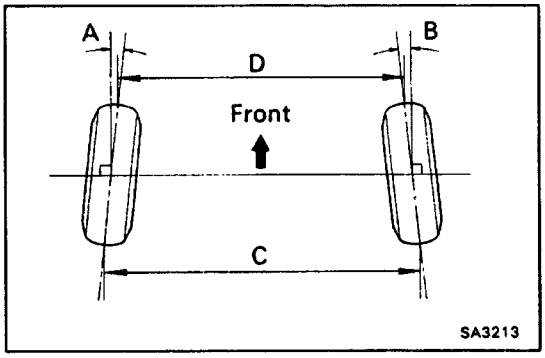

SA3213

5. INSPECT TOE–IN

Toe–in (total):

A+B 0.1° ±0.2°

(C–D 1±2 mm, 0.04±0.08 in.)

If toe–in is not within specification, adjust by the tie rod end.

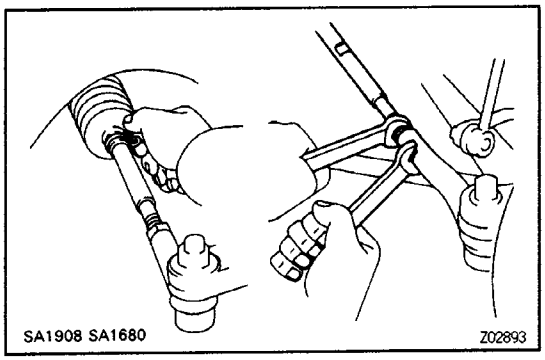

6. ADJUST TOE–IN

(a) Remove the boot clips.

(b) Loosen tie rod end lock nut.

(c) Turn the left and right tie rod ends an equal amount to adjust the toe–in.

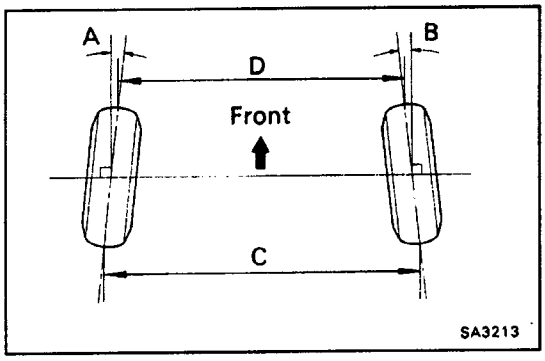

Toe–in (total):

A+13 0.1°±0.1°

(C–D 1 ±1 mm, 0±0.08 in.)

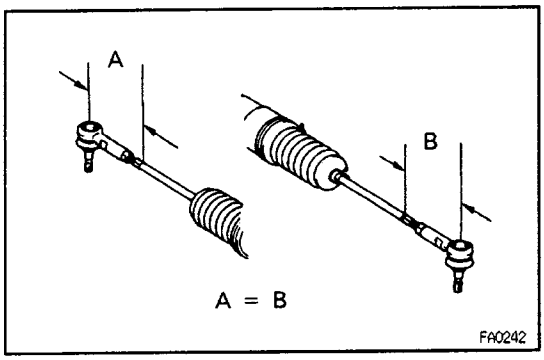

HINT: Insure that the lengths of the left and right tie rod ends are the same.

Tie rod end length left–right error:

1.0 mm l0.039 in.) or less

(d) Torque the tie rod end lock nuts.

Torque: 47 N–m (480 kgf–cm, 35 ft–lbf)

(e) Place the boot on the seat and clamp it.

HINT: Insure that the boots are not twisted.

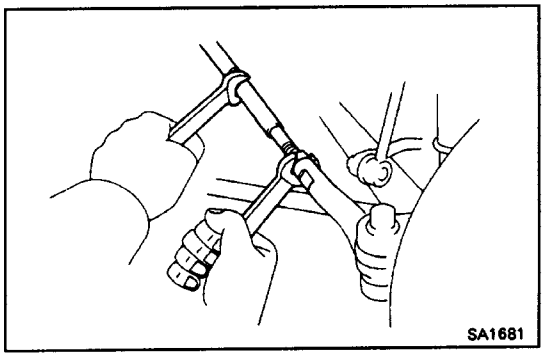

7. CHECK WHEEL ANGLE

Wheel Angle (Maximum):

Inside wheel 37°00' ± 1° 30'

Outside wheel 32°

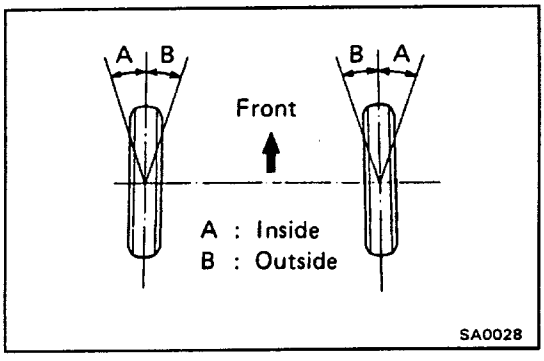

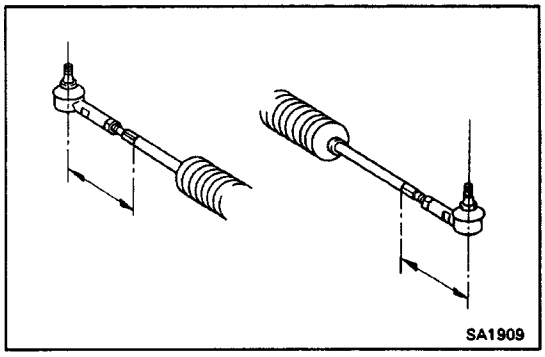

If wheel angles differ from the standard specifica–tions, check to see of the lengths of the left and right tie rods are the same.
HINT: If the rod lengths are not equal, the wheel angle cannot be adjusted properly.
If the tie rod lengths were changed to adjust the wheel angle, inspect the toe–in.

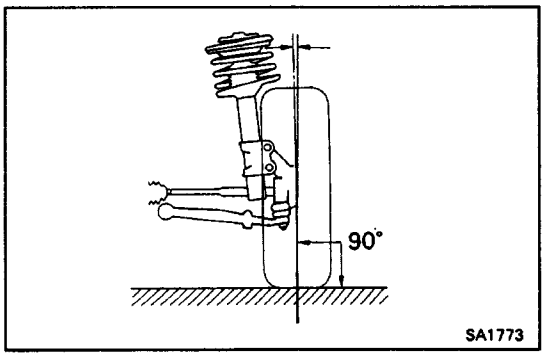

REAR WHEEL ALIGNMENT

REAR WHEEL ALIGNMENT INSPECTION AND ADJUSTMENT

1. INSPECT CAMBER

Camber:

–1°35'±45'

Cross camber:

30' or less

HINT: Camber is not adjustable, if measurement is not within specification, inspect and replace the suspen–sion parts as necessary.

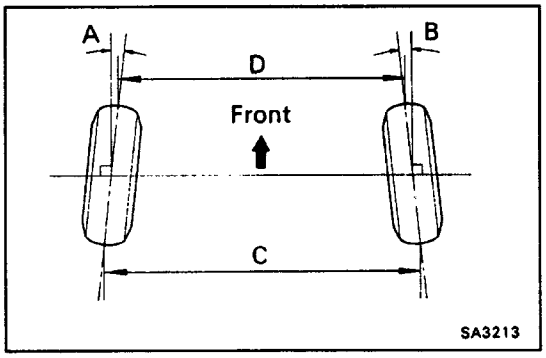

2. INSPECT TOE–IN

Toe–In (total):

A+13 0.6°±0.1°

(C–D 6±1 mm (0.24±0.04 in.)

If toe–in is not within specification adjust it.

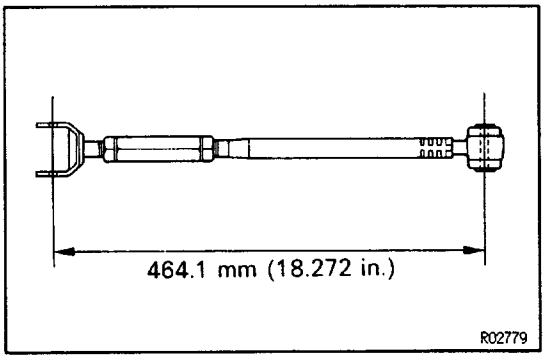

3. ADJUST TOE–IN

(a) Measure the lengths of the left and right suspension arms to see that the length are equal.
If not equal, adjust following the procedures below.

- If the toe–in is less than standard, shorten the tie rod by turning the tie rod tube.
- If the toe–in is greater than standard, lengthen the tie rod by turning the tie rod tube.

WHEEL ALIGNMENT

PRIMARY INSPECTION

1. MAKE FOLLOWING CHECKS AND CORRECT ANY PROBLEMS

(a) Check the tires for wear, size and proper inflation pressure.

Cold tire inflation pressure:

Tire size	Front	Rear
195/55R 15 83V	**200 kPa (2.0 kgf/cm², 26 psi)**	–
225/50R15 91V	–	**230 kPa (2,3 kgf/cm², 33 psi)**

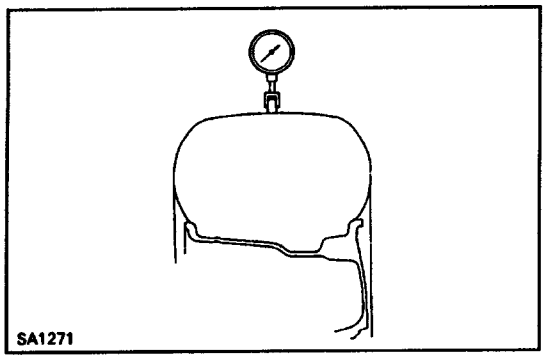

(b) Check the wheel runout.

lateral runout:

Less than 1.4 mm (0.055 in.)

(c) Check the wheel bearings for looseness.

(d) Check the suspension for looseness.

(e) Check the steering linkage for looseness.

(f) Check the ball joint for excessive looseness.

(g) Check that the shock absorber work properly by using the standard bounce test.

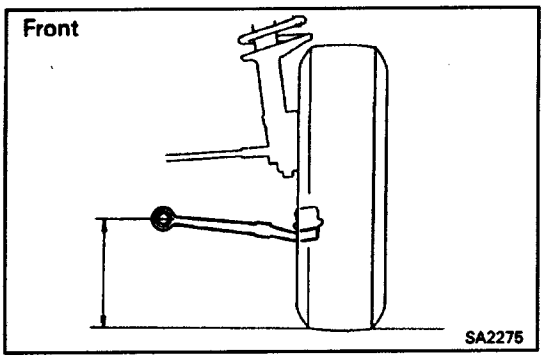

2. MEASURE VEHICLE HEIGHT

Vehicle height:

Front 216.5 mm (8.524 in.)

Rear 193.4 mm (7.614 in.)

HINT:

- Measuring point
  Front–Measure from the ground to the center of the lower suspension arm mounting bolt.
  Rear–Measure from the ground to the center of the body side Rear suspension No.1 mounting.
- Before inspecting the wheel alignment, adjust the chassis ground clearance to specification.
  If the clearance of the vehicle is not standard, try to adjust it by pushing down in the body or by lifting the body. If still not correct, check for bad springs or suspension parts.

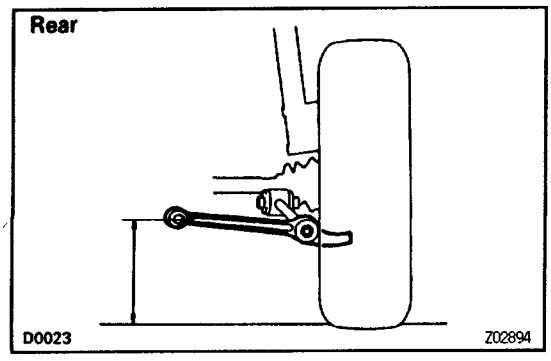

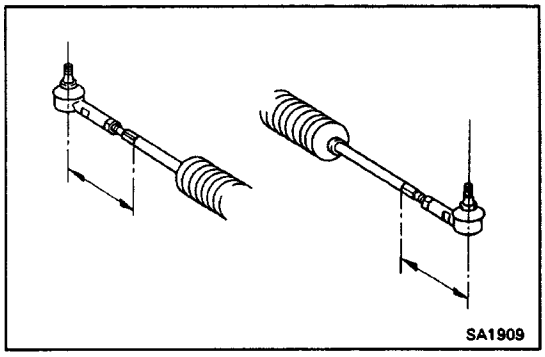

If wheel angles differ from the standard specifica–tions, check to see of the lengths of the left and right tie rods are the same.
HINT: If the rod lengths are not equal, the wheel angle cannot be adjusted properly.
If the tie rod lengths were changed to adjust the wheel angle, inspect the toe–in.

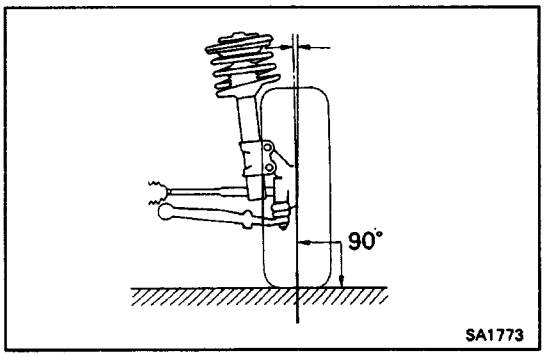

REAR WHEEL ALIGNMENT

REAR WHEEL ALIGNMENT INSPECTION AND ADJUSTMENT

1. INSPECT CAMBER

Camber:

–1°35'±45'

Cross camber:

30' or less

HINT: Camber is not adjustable, if measurement is not within specification, inspect and replace the suspen–sion parts as necessary.

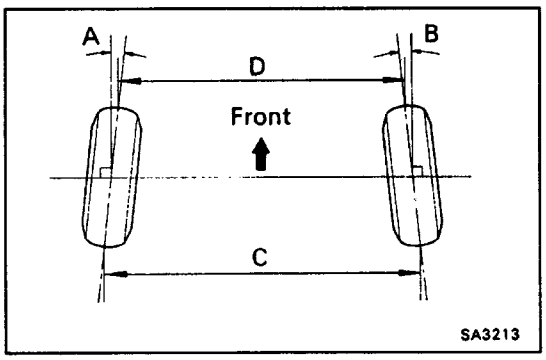

2. INSPECT TOE–IN

Toe–In (total):

A+13 0.6°±0.1°

(C–D 6±1 mm (0.24±0.04 in.)

If toe–in is not within specification adjust it.

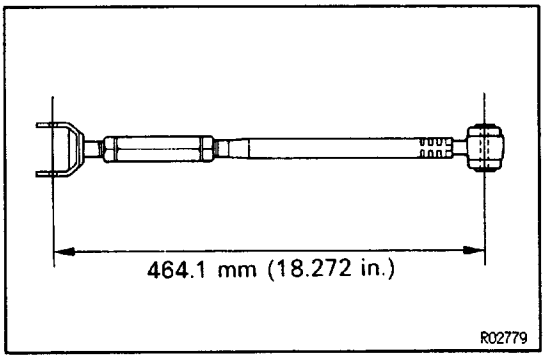

3. ADJUST TOE–IN

(a) Measure the lengths of the left and right suspension arms to see that the length are equal.
If not equal, adjust following the procedures below.

- If the toe–in is less than standard, shorten the tie rod by turning the tie rod tube.
- If the toe–in is greater than standard, lengthen the tie rod by turning the tie rod tube.

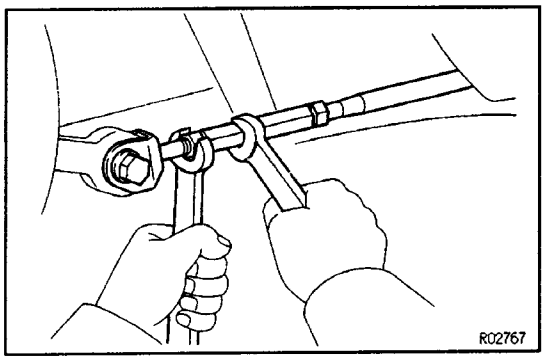

(b) Loosen the nuts.

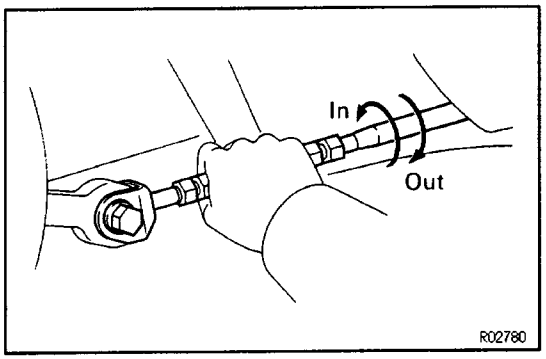

(c) Turn the left and right tie rod tubes an equal amount.

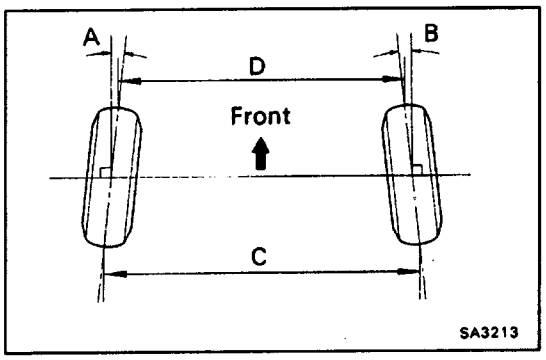

Too–in (total):
A+13 0.6°±0.1°
(C–D 6±1 mm, 0.24±0.04 in.)

”

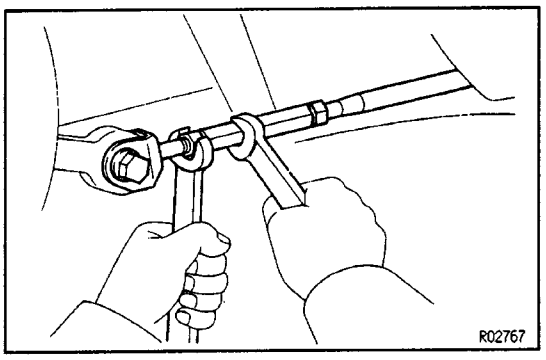

(d) Tighten the nuts.
(e) After toe–in adjustment, check the rear wheel ali–gnment.

ASSEMBLY REMOVAL AND INSTALLATION

AX07E–01

Remove and install the parts as shown below.

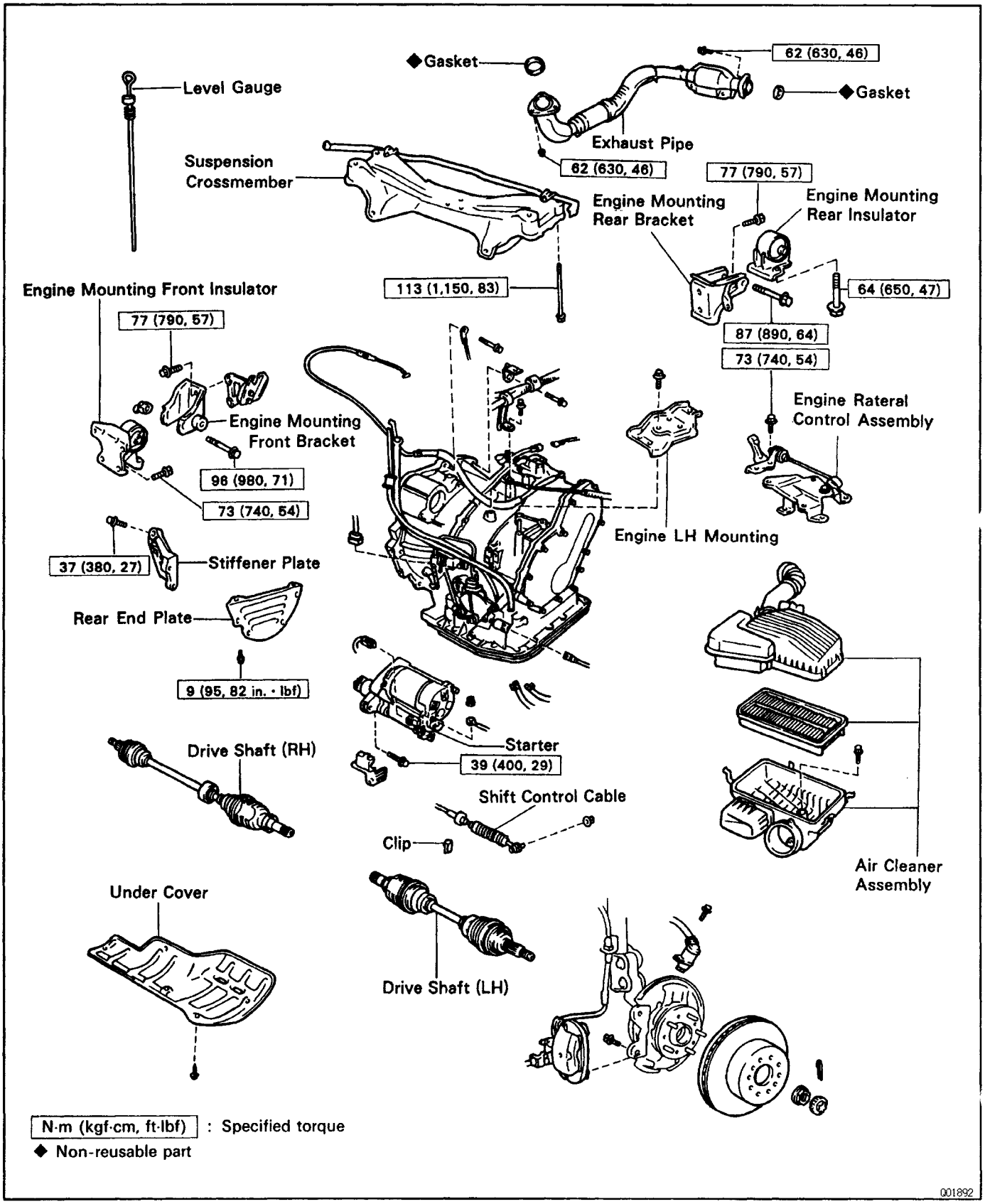

AX07F–01

TRANSAXLE REMOVAL

1. REMOVE NEGATIVE BATTERY CABLE

2. REMOVE AIR CLEANER CASE ASSEMBLY WITH AIR HOSE

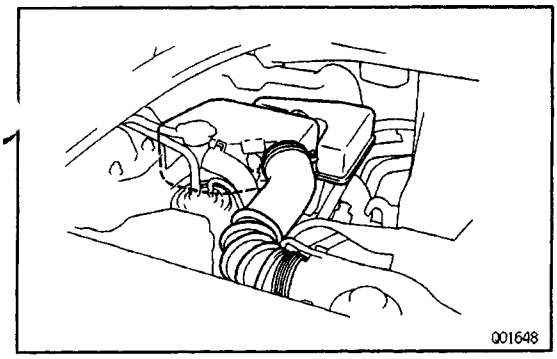

3. REMOVE LEVEL GAUGE AND DISCONNECT BRE–ATHER HOSE

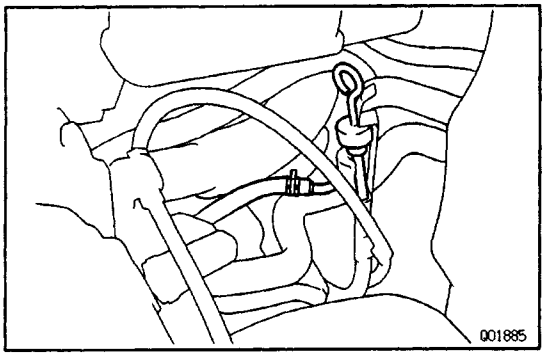

4. REMOVE THROTTLE CABLE

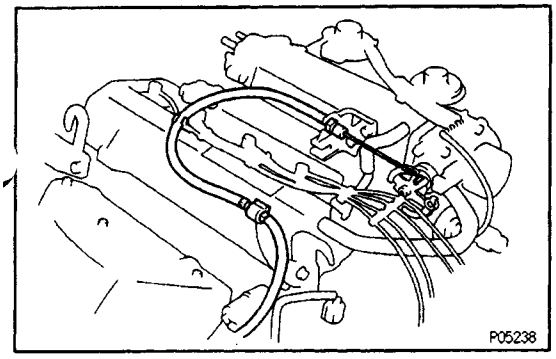

5. REMOVE STARTER

(a) Disconnect the connector and wire from the starter.

(b) Remove the two bolts and starter.

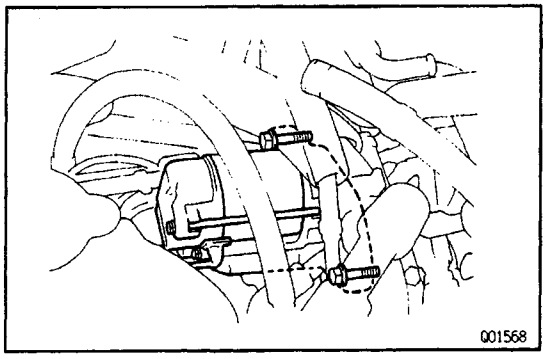

6. DISCONNECT NO.1 VEHICLE SPEED PULSE GEN–ERATOR CONNECTOR

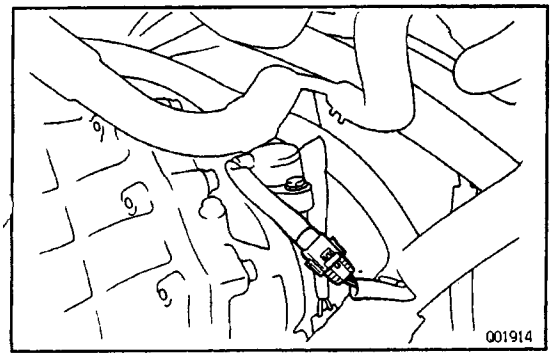

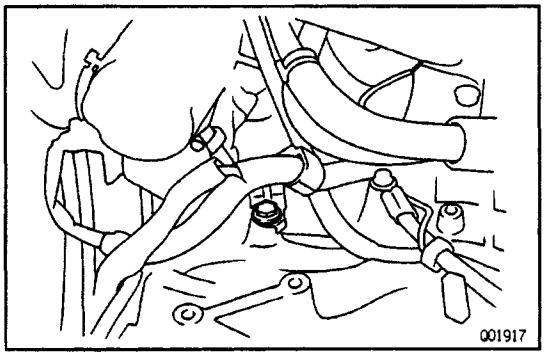

7. REMOVE WIRE HARNESS CLAMP

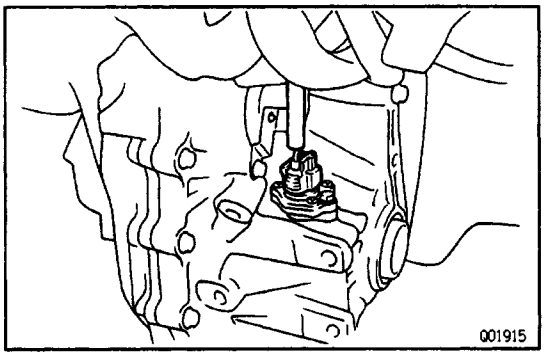

8. DISCONNECT NO.2 VEHICLE SPEED PULSE GENERATOR CONNECTOR

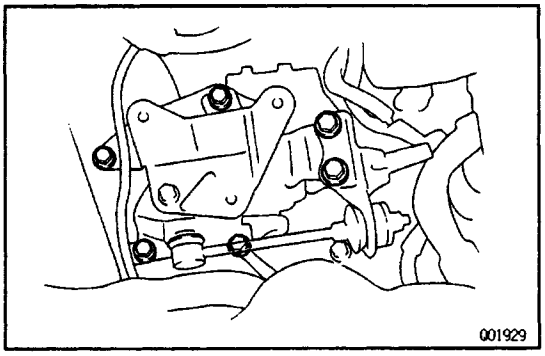

9. REMOVE ENGINE RATERAL CONTROL ASSEMBLY

Remove six bolts and the rateral control assembly.

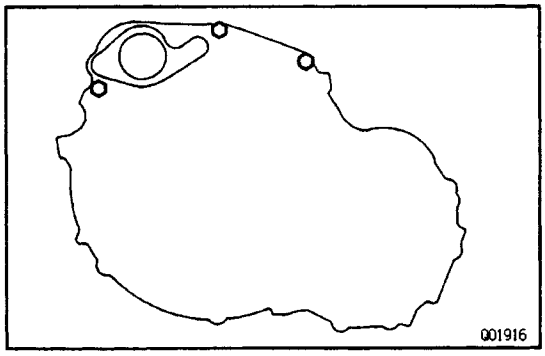

10. REMOVE TRANSAXLE MOUNTING BOLTS OF TRANSAXLE CASE UPPER SIDE

Remove three bolts from the transaxle case upper side.

11. REMOVE REAR WHEELS

12. RAISE VEHICLE

NOTICE: Be sure the vehicle is securely supported.

13. REMOVE UNDERCOVER

Remove the five bolts and under cover.

14. DRAIN TRANSAXLE OIL

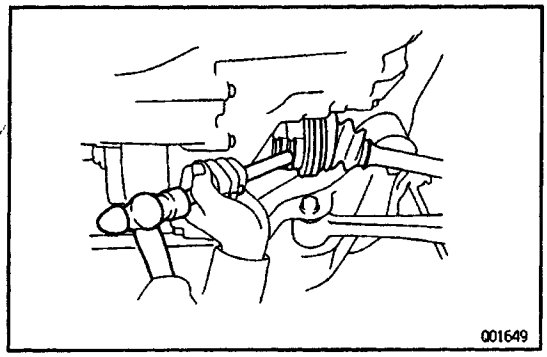

15. REMOVE DRIVE SHAFT
(See page SA–55)

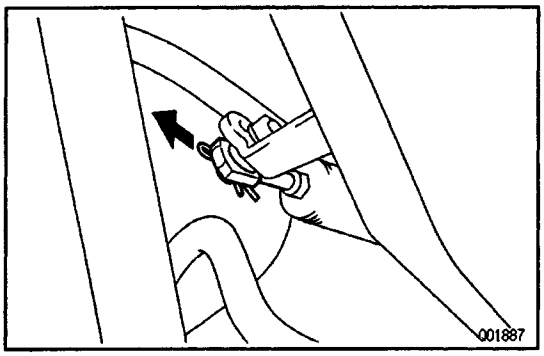

16. DISCONNECT SHIFT CONTROL CABLE
(a) Remove the clip and washer.

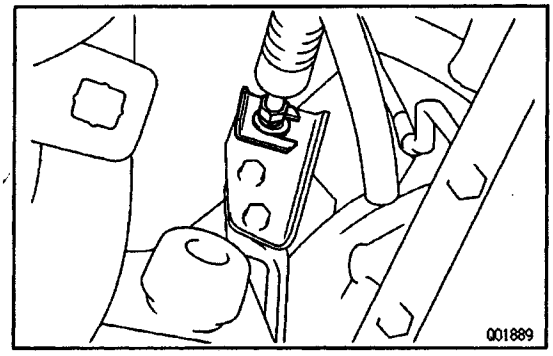

(b) Remove the retainer from the cable.

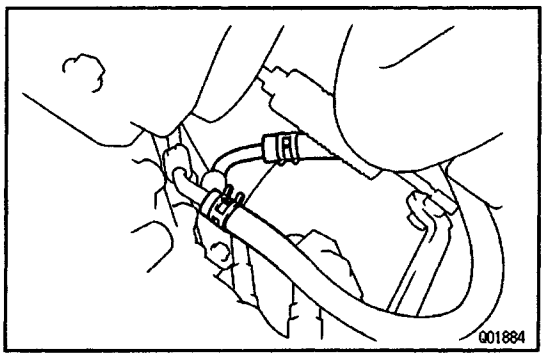

17. REMOVE TWO OIL COOLER TUBES

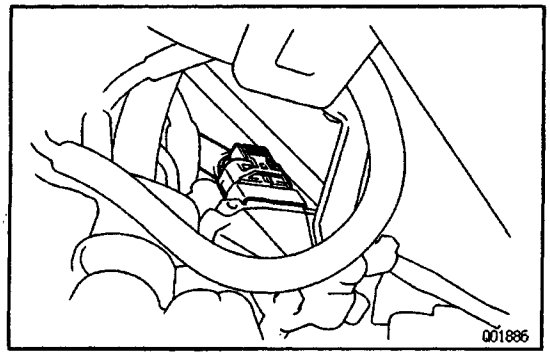

18. DISCONNECT PARK NEUTRAL SWITCH CONNEC–TOR

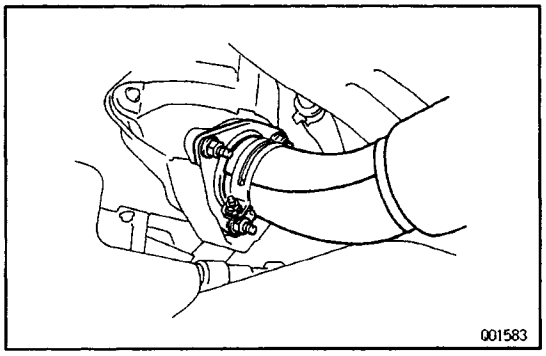

19. REMOVE EXHAUST PIPE

(a) Remove the three nuts.

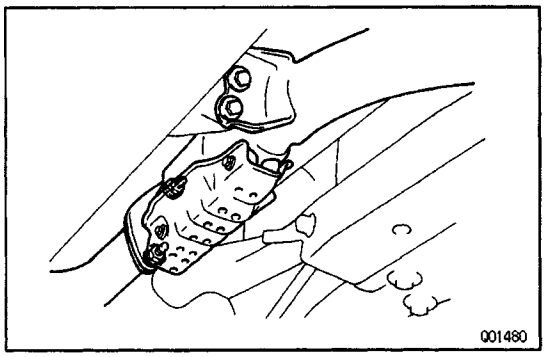

(b) Remove the four bolts.

(c) Remove exhaust pipe and two gaskets.

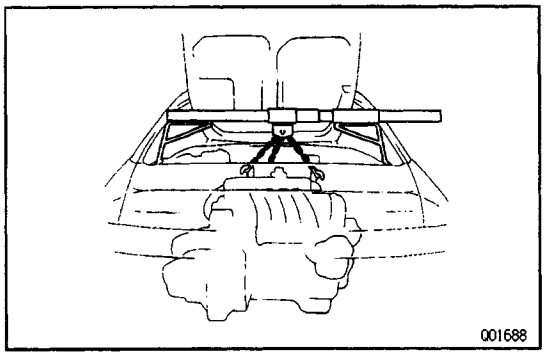

20. INSTALL ENGINE SUPPORT FIXTURE

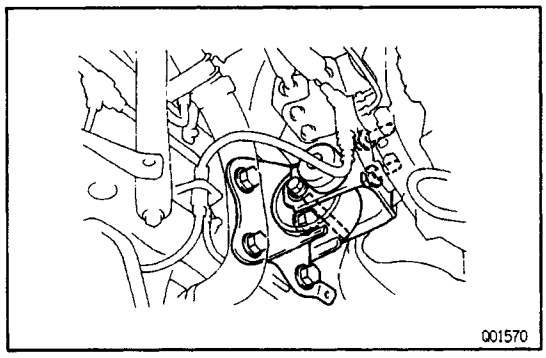

21. REMOVE ENGINE FRONT MOUTING

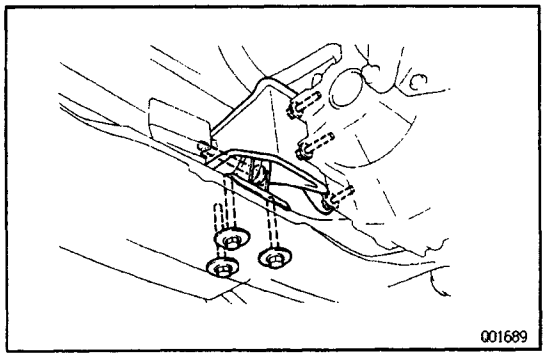

22. REMOVE ENGINE REAR MOUNTING

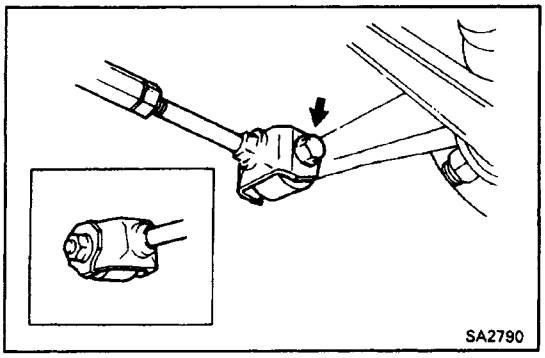

23. REMOVE SUSPENSION CROSSMEMBER

(a) Remove the bolt, nut and suspension arm from rear axle hub.

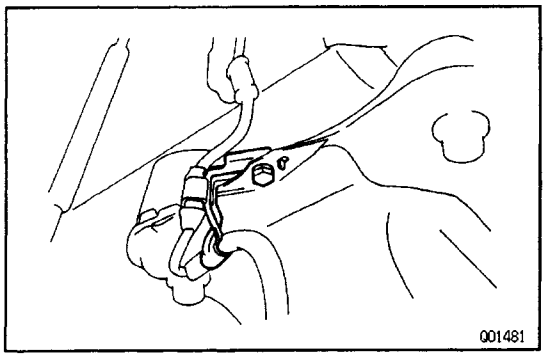

(b) Remove the bolt and disconnect the speed sensor bracket from the rear suspension crossmember–.

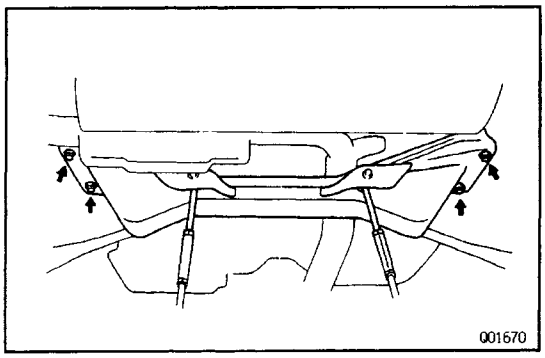

(c) Remove the four bolts and suspension crossmember.

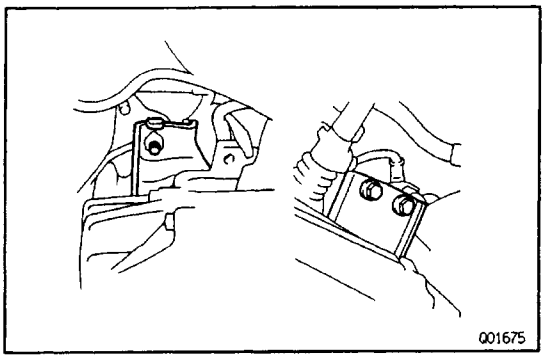

24. REMOVE ENGINE LH MOUNTING SET BOLTS

(a) Raise the transaxle and engine slightly with a jack and wooden block in between.

(b) Remove the three bolts.

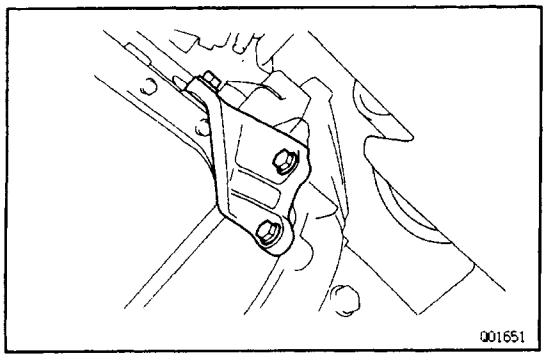

25. REMOVE STIFFENER PLATE

Remove the three bolts and stiffener plate.

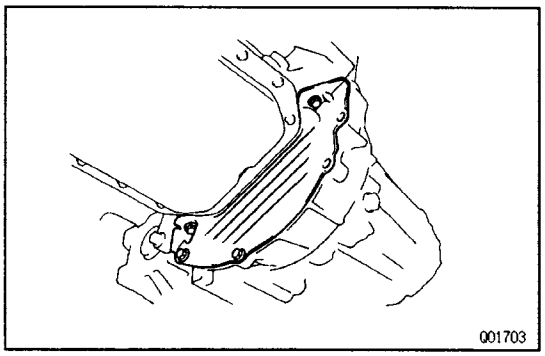

26. REMOVE REAR END PLATE

Remove the four bolts and rear end plate.

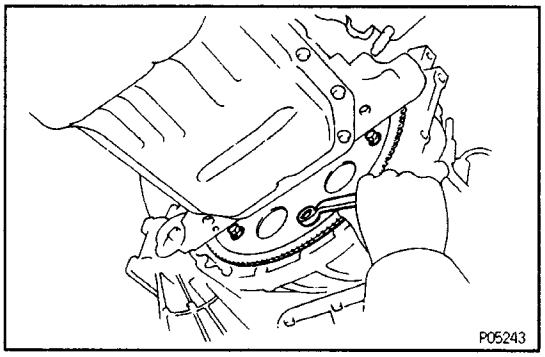

27. REMOVE TORQUE CONVERTER MOUNTING BOLT

Remove the six bolts by turning the crankshaft.

28. REMOVE TRANSAXLE

(a) Remove the transaxle mounting bolts from the engine.
(b) Lower the engine left side and remove the transaxle from the engine.

TORQUE CONVERTER CLEANING

AX07G–01

If the transmission is contaminated, the torque converter and transmission cooler should be thoroughly flushed with ATF.

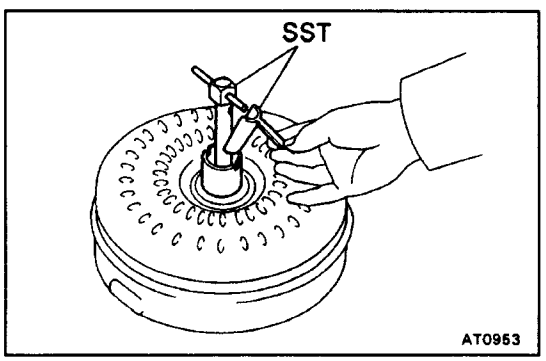

A%07M–01

TORQUE CONVERTER AND DRIVE PLATE INSPECTION

1. INSPECT ONE–WAY CLUTCH

(a) Install SST in the inner race of the one–way clutch.
SST 09350–32014 (09351–32010)
(b) Install SST so that it fits in the notch of the converter hub and outer race of the one–way clutch.
SST 09350–32014 (09351–32020)

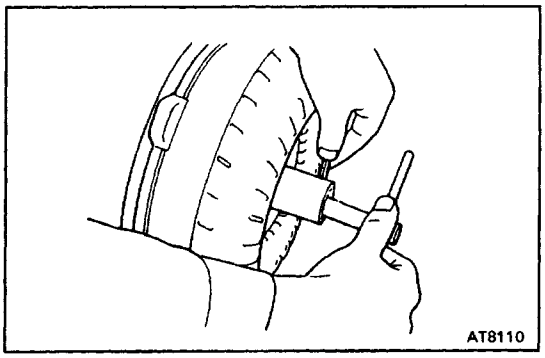

(c) With the torque converter standing on its side, the clutch should lock when turned counterclockwise, and should rotate freely and smoothly clockwise. If necessary, clean the converter and retest the clutch. Replace the converter if the clutch still fails the test.

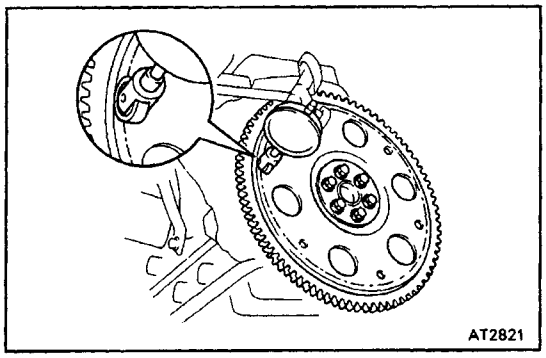

2. MEASURE DRIVE PLATE RUNOUT AND INSPECT RING GEAR

Set up a dial indicator and measure the drive plate runout.

If runout exceeds 0.20 mm (0.0079 in.) or if the ring gear is damaged, replace the drive plate. If installing a new drive plate, note the orientation of the spacers and tighten the bolts.

Torque: 88 N–m (900 kgf–cm, 65 ft–lbf)

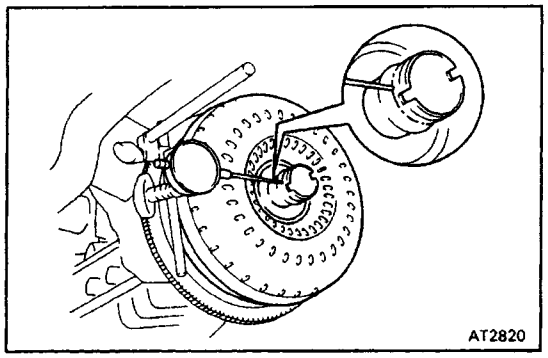

3. MEASURE TORQUE CONVERTER SLEEVE RUNOUT

(a) Temporarily mount the torque converter to the drive plate. Set up a dial indicator.

Torque: 18 N–m (185 kgf–cm, 13 ft–lbf)

If runout exceeds 0.30 mm (0.0118 in.) try to correct it by reorienting the installation of the converter. If excessive runout cannot by corrected, replace the torque converter.

HINT: Mark the position of the converter to ensure correct installation.

(b) Remove the torque converter from the drive plate.

AX07J–01

TRANSAXLE INSTALLATION

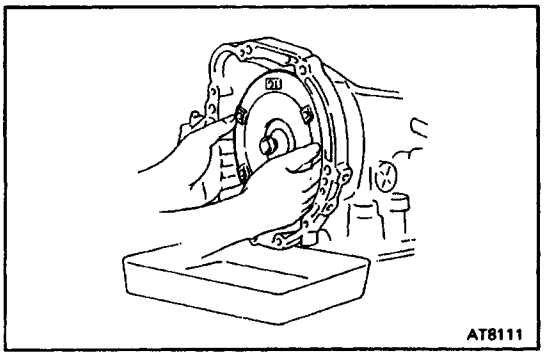

1. INSTALL TORQUE CONVERTER IN TRANSAXLE

If the torque converter has been drained and washed, refill with new ATF.

Fluid type:

ATF DEXRON®II

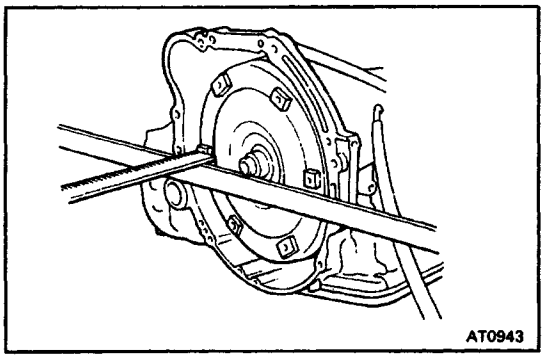

2. CHECK TORQUE CONVERTER INSTALLATION

Using calipers and a straight edge, measure from the installed surface to the front surface of the transaxie housing.

Correct distance:

More than 23.0 mm (0.906 in.)

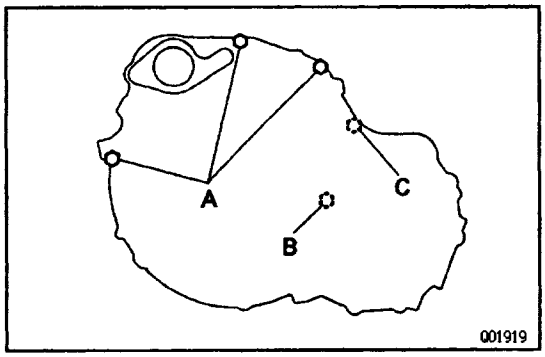

3. ALIGN TRANSAXLE AT INSTALLATION POSITION

(a) Align the two knock pins on the block with the con–verter housing.

(b) Temporarily install one bolt.

4. INSTALL TRANSAXLE HOUSING MOUNTING BOLTS

Install the transaxle housing mounting bolts.

Torque:

A bolt 64 N–m (650 kgf–cm, 47 ft–lbf)

B bolt 46 N–m (470 kgf–cm, 34 ft–lbf)

C bolt 25 N–m (250 kgf–cm, 18 ft–lbf)

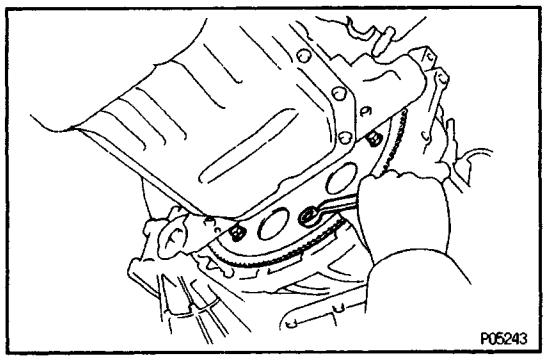

5. INSTALL TORQUE CONVERTER MOUNTING BOLTS

(a) First, install the gray bolt. Then install five black bolts while turning the crankshaft to gain across.

(b) Tighten the bolts evenly.

Torque: 27 N–m (280 kgf–cm, 20 ft–lbf)

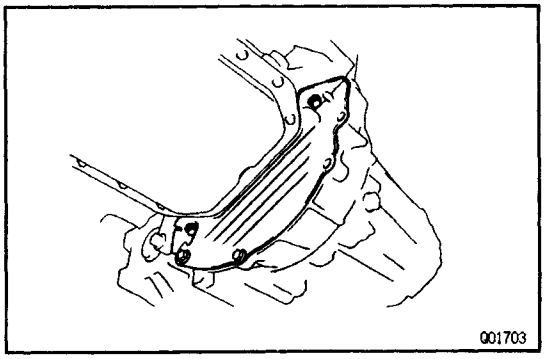

6. INSTALL REAR END PLATE

Install the rear end plate and torque the four bolts.

Torque: 9 N–m (95 kgf–cm, 82 in.–lbf)

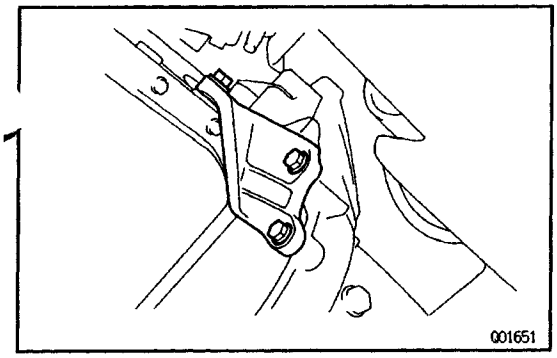

7. INSTALL STIFFENER PLATE

Install the stiffener plate with three bolts.

Torque: 37 N–m (380 kgf–cm, 27 ft–lbf)

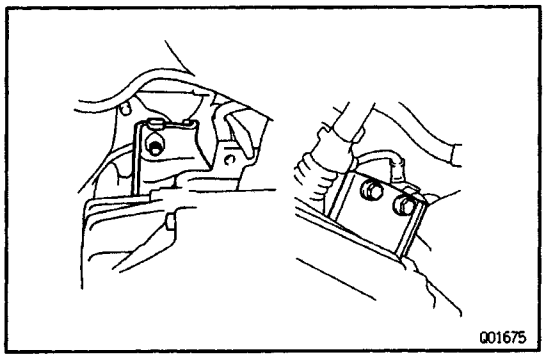

8. INSTALL ENGINE LH MOUNTING SET BOLTS

Raise the engine left side and install the three set bolts.

Torque: 64 N–m (650 kgf–cm, 47 ft–lbf)

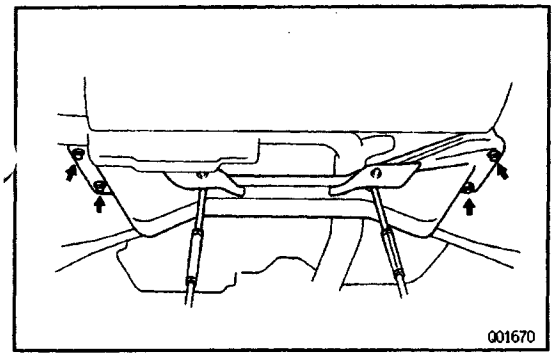

9. INSTALL SUSPENSION CROSSMEMBER

(a) Install the suspension crossmember in place, then install and tighten the four bolts.

Torque: 113 N–m (1,15o kgf–cm, 83 ft–lbf)

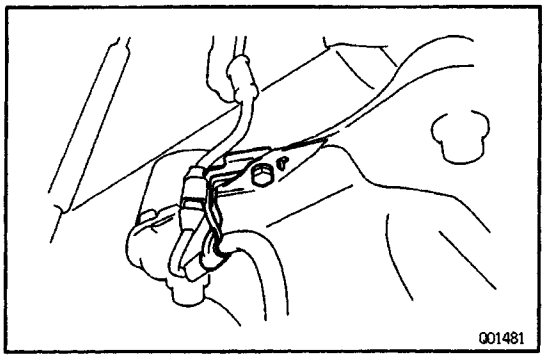

(b) Install the speed sensor bracket to suspension cro–ssmember.

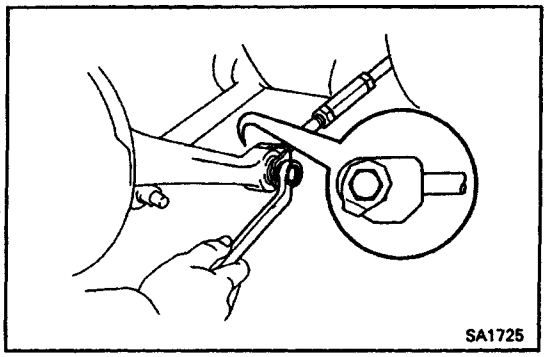

(c) Install the suspension arm with bolt and nut to rear axle hub.

Torque: 103 N–m (1,050 kgf–cm, 76 ft–lbf)

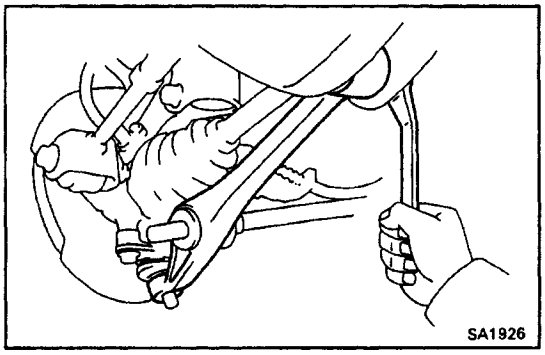

(d) Install the lower arm with bolt to suspension cross–member.

Torque: 132 N–m (1,350 kgf–cm, 98 ft–lbf)

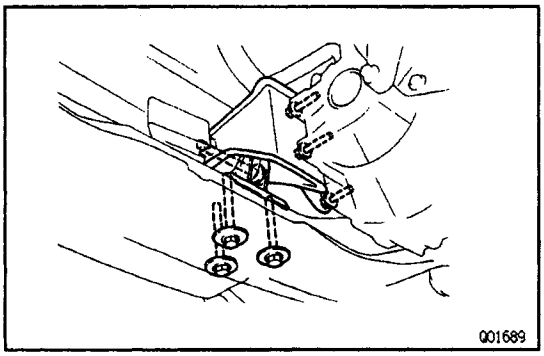

10. INSTALL ENGINE REAR MOUNTING

Transaxle side

Torque: 77 N–m (790 kgf–cm, 57 ft–lbf)

Crossmember side

Torque: 64 N–m (650 kgf–cm, 47 ft–lbf)

Through bolt

Torque: 87 N–m (890 kgf–cm, 64 ft–lbf)

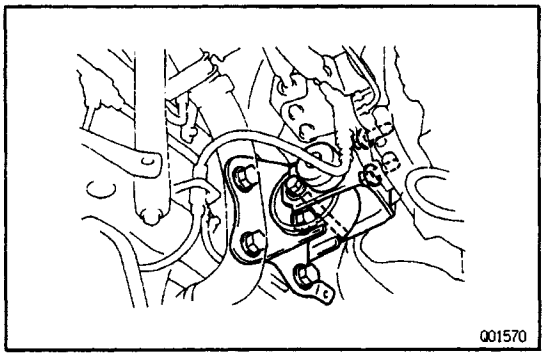

11. INSTALL ENGINE FRONT MOUNTING

Transaxle side

Torque: 77 N–m (790 kgf–cm, 57 ft–lbf)

Body side

Torque: 73 N–m (740 kgf–cm, 54 ft–lbf)

Through bolt

Torque: 96 N–m (980 kgf–cm, 71 ft–lbf)

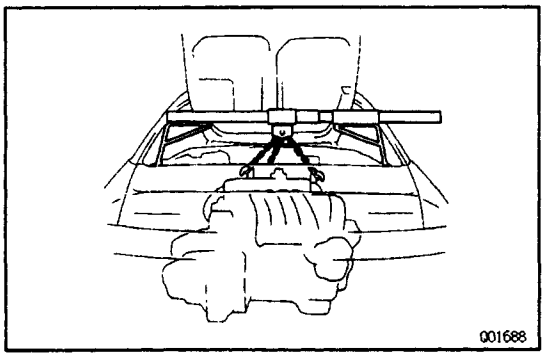

12. REMOVE ENGINE SUPPORT FIXTURE

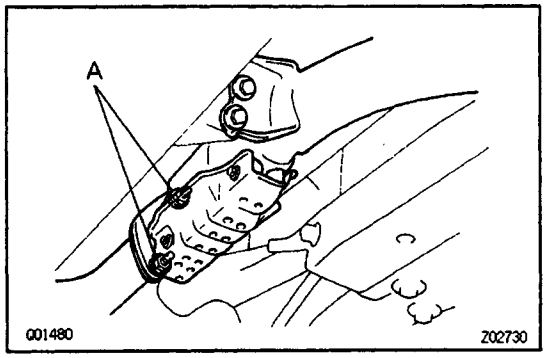

13. INSTALL EXHAUST PIPE

(a) Install the two new gaskets and exhaust pipe.
(b) Install the four bolts.
(c) Torque the “A” bolts.

Torque: 62 N–m (630 kgf–cm, 46 ft–lbf)

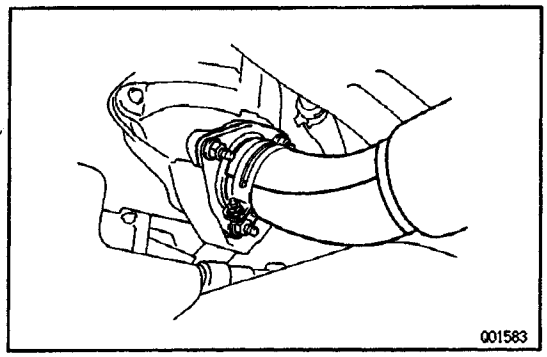

(d) Install and torque the three nuts
Torque: 62 N–m (630 kgf–cm, 46 ft–lbf)

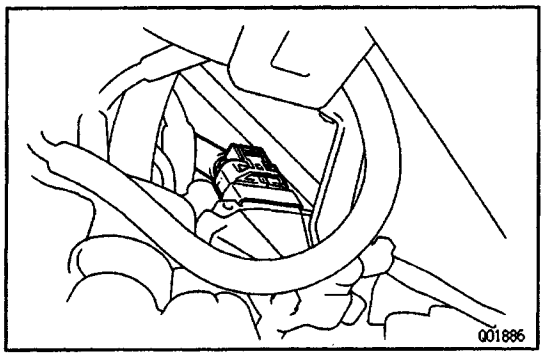

14. CONNECT PARK NEUTRAL SWITCH CONNECTOR

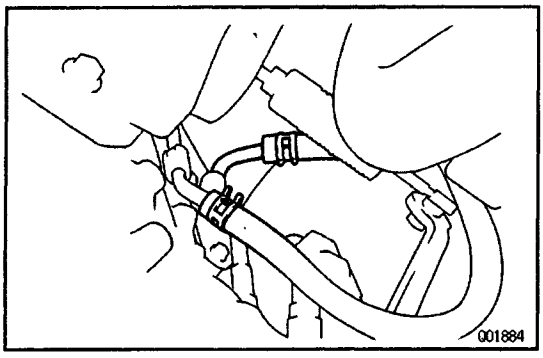

15. INSTALL TWO OIL COOLER TUBES

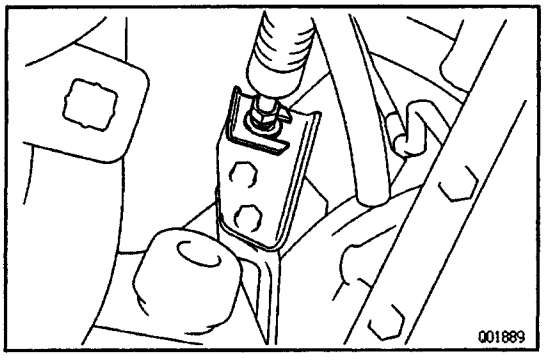

16. CONNECT SHIFT CONTROL CABLE
(a) Install the retainer to the cable.
(b) Connect the cable to the likage with the washer and clip.

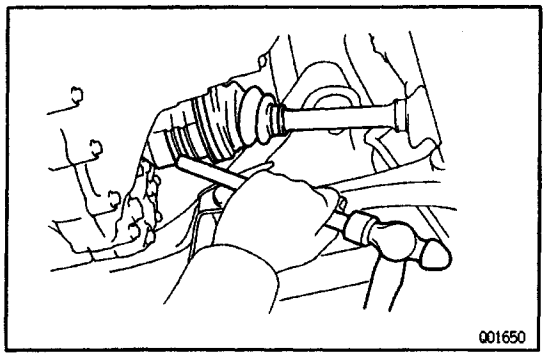

17. INSTALL DRIVE SHAFT
(See page SA–64)
18. INSTALL UNDER COVER
Install the under cover and five bolts.
19. INSTALL REAR WHEELS AND LOWER VEHICLE

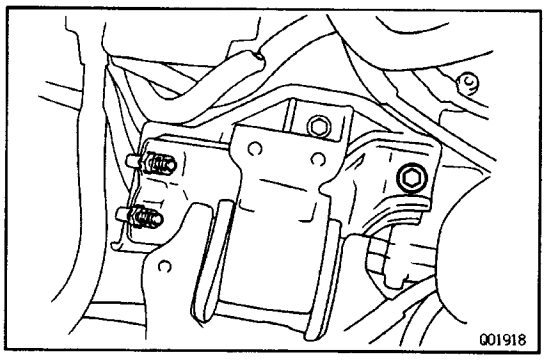

20. INSTALL ENGINE RATERAL CONTROL ASSEMBLY

(a) Install three bolts to the engine LH mounting.

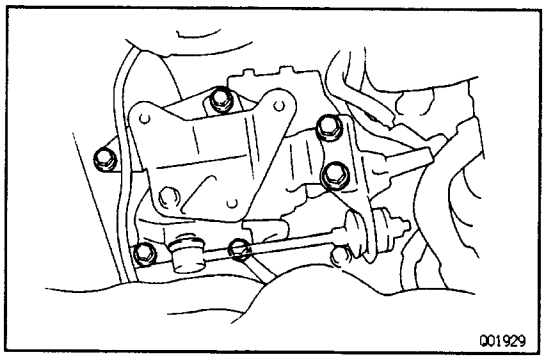

(b) Install the engine rateral control assembly with six bolts.

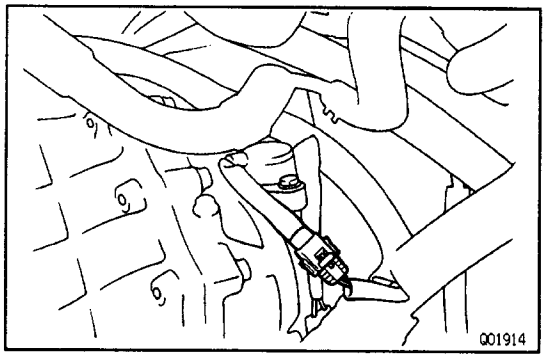

21. CONNECT NO.1 VEHICLE SPEED PULSE GENERA–TOR CONNECTOR

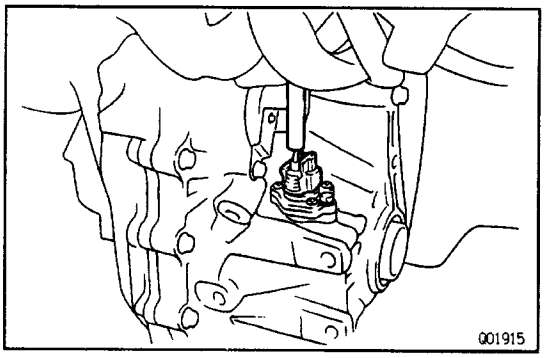

22. CONNECT NO.2 VEHICLE SPEED PULSE GENERA–TOR CONNECTOR

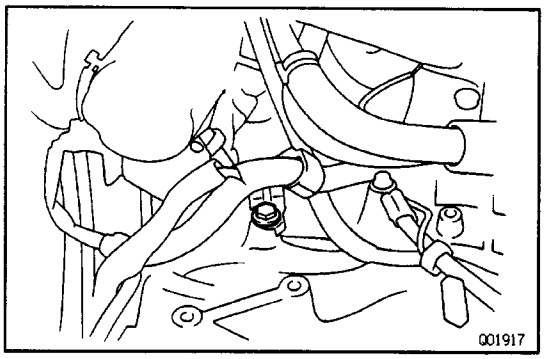

23. INSTALL WIRE HARNESS CLAMP

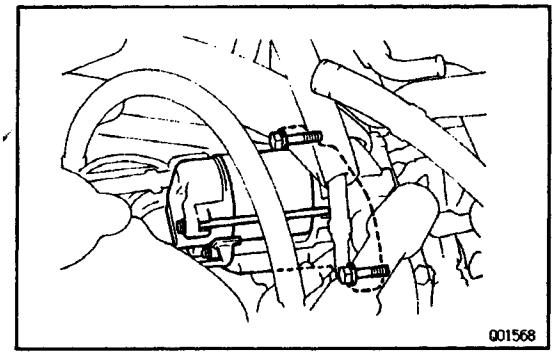

24. INSTALL STARTER

(a) Install the starter.

(b) Install and torque the two bolts.

Torque: 39 N–m (400 kgf¿rm, 29 ft–lbf)

(c) Connect the connector and wire to the starter.

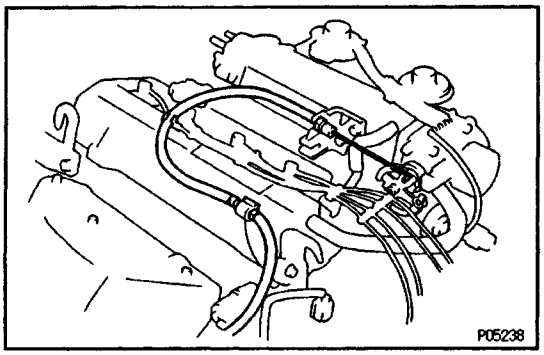

25. INSTALL THROTTLE CABLE

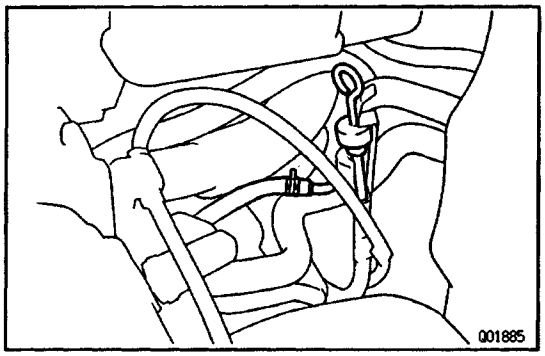

26. INSTALL LEVEL GAUGE AND CONNECT BREATHER HOSE

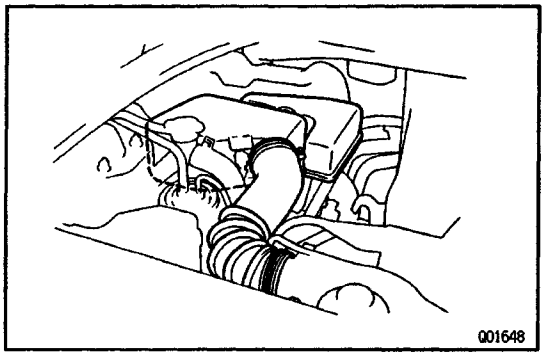

27. INSTALL AIR CLEANER CASE ASSEMBLY WITH AIR HOSE

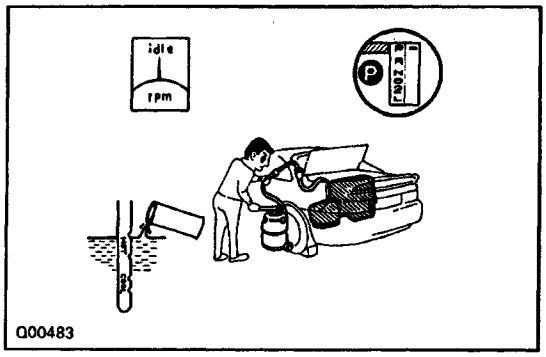

28. INSTALL NEGATIVE BATTERY CABLE

29. INSPECT REAR WHEEL ALIGNMENT

(See page SA–6)

30. FILL TRANSAXLE WITH ATF

(See page AX–14)

AUTOMATIC TRANSAXLE

DESCRIPTION

AX06Q–01

GENERAL DESCRIPTION

The A241 E automatic transaxle is a 4–speed transaxle with a lock–up mechanism developed exclusively for use with a transversely–mounted engine.
The A241 E automatic transaxle is an Electronically Controlled Transmission (hereafter called ECT).
The automatic transaxle is mainly composed of the torque converter with lock–up clutch, 4–speed planetary gear unit, the hydraulic control system and the electronic control system.
To minimize the possibility of incorrect operation of the automatic transaxle, a shift lock mechanism has also been added.

Sectional View

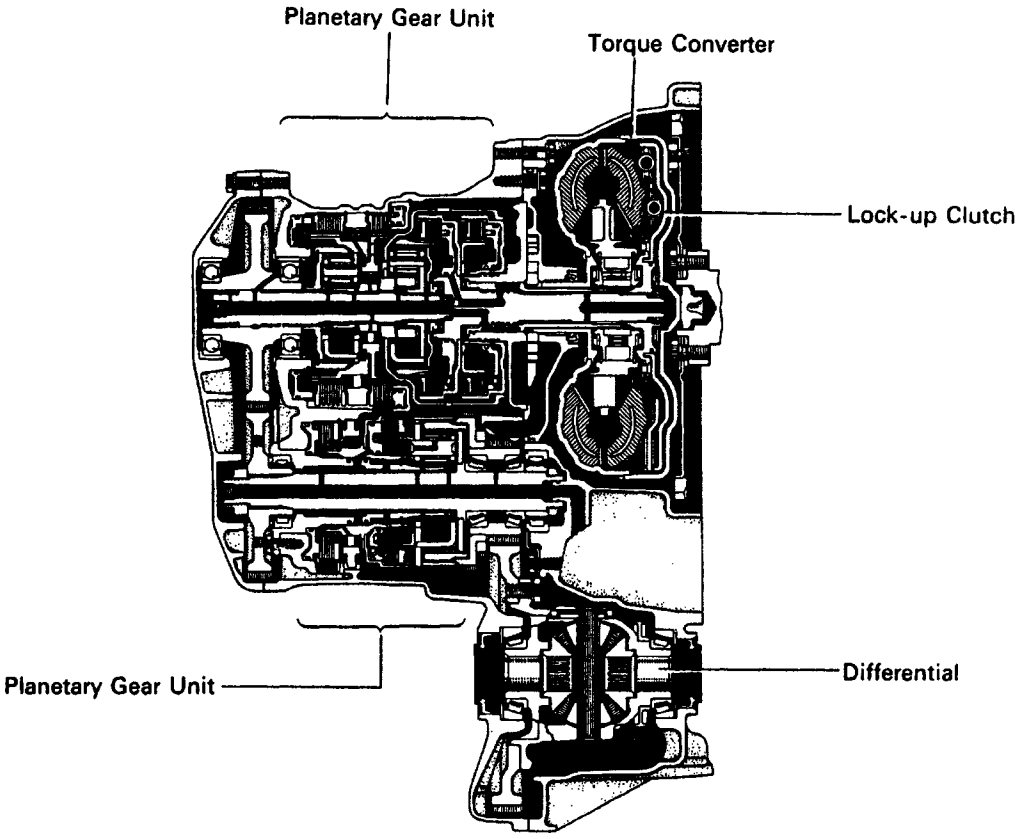

A241E

AT5715

Type of Transaxle			A241E
Type of Engine			5E-FE
Torque Converter	Stall Torque Ratio		2.1 : 1
	Lock–Up Mechanism		Equipped
Gear Ratio	1st Gear		3.643
	2nd Gear		2.008
	3rd Gear		1.296
	O/D Gear		0.892
	Reverse Gear		2.977
Number of Discs and Plates (Disc/Plate)	C_1	Forward Clutch	4/4
	C_2	Direct Clutch	3/3
	C_3	Underdrive Clutch	3/5
	B_2	2nd Brake	3/3
	B_3	1st & Reverse Brake	6/5
	B_4	Underdrive Brake	3/3
2nd Coast Brake (B_1) Band Width mm (in.)			25 (0.984)
ATF	Type		ATF DEXRON® II
	Capacity liter (US qts, Imp. qts)	Total	8.0 (8.5, 7.0)
		Drain & Refill	3.3 (3.5, 2.9)

V00985

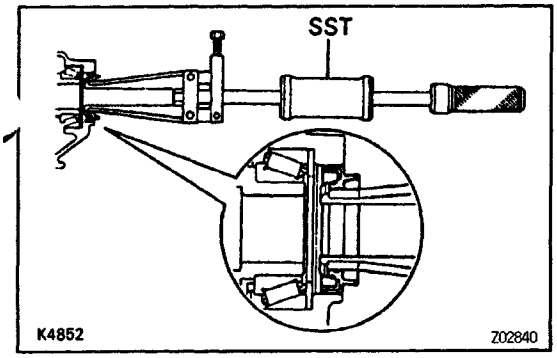

DIFFERENTIAL OIL SEAL

AX07C–01

DIFFERENTIAL OIL SEAL REMOVAL

1. DRAIN TRANSAXLE FLUID

Remove the drain plug and drain the fluid into a suitable container.

2. REMOVE ENGINE UNDER COVER

3. REMOVE LH AND RH DRIVE SHAFTS

(See page SA–55)

4. REMOVE LH AND RH SIDE OIL SEALS

Using SST, drive out the both side oil seals.

SST 09308–00010

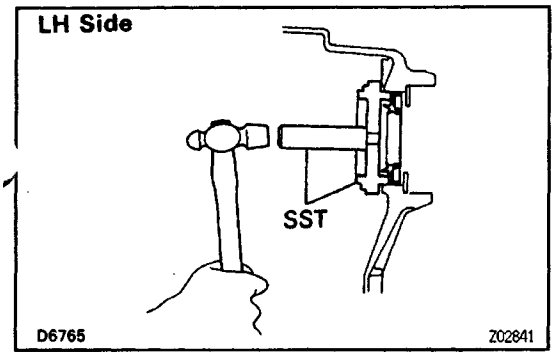

DIFFERENTIAL OIL SEAL INSTALLATION

1. INSTALL LH SIDE OIL SEAL

(a) Using SST, drive in a new oil seal.

SST 09350–32014 (09351–32111, 09351–32130)

Oil seal drive in depth:

5.2 ± 0.5 mm (0.205 ± 0.020 in.)

(b) Coat the oil seal lip with MP grease.

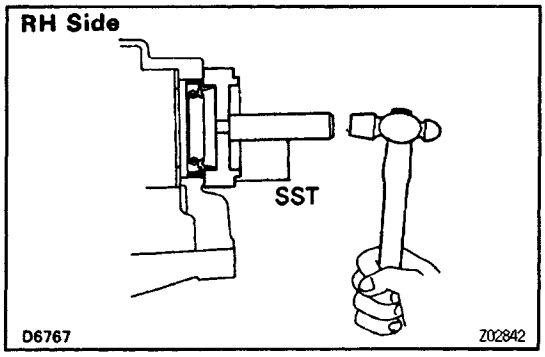

2. INSTALL RH SIDE OIL SEAL

(a) Using SST, drive in a new oil sea) until SST makes contact with the case surface.

SST 09350–32014 (09351–32150, 09351–32130)

Oil seal drive in depth:

0 ± 0.5 mm (0.020 in.)

(b) Coat the oil seal lip with MP grease.

3. INSTALL LH AND RH DRIVE SHAFT

(See page SA–64)

4. FILL TRANSAXLE WITH ATF

(See page AX–14)

NOTICE: Do not overfill.

Fluid type:

ATF DEXRON®II

5. CHECK FLUID LEVEL

6. INSTALL ENGINE UNDER COVER

OPERATION

AX06H – 01

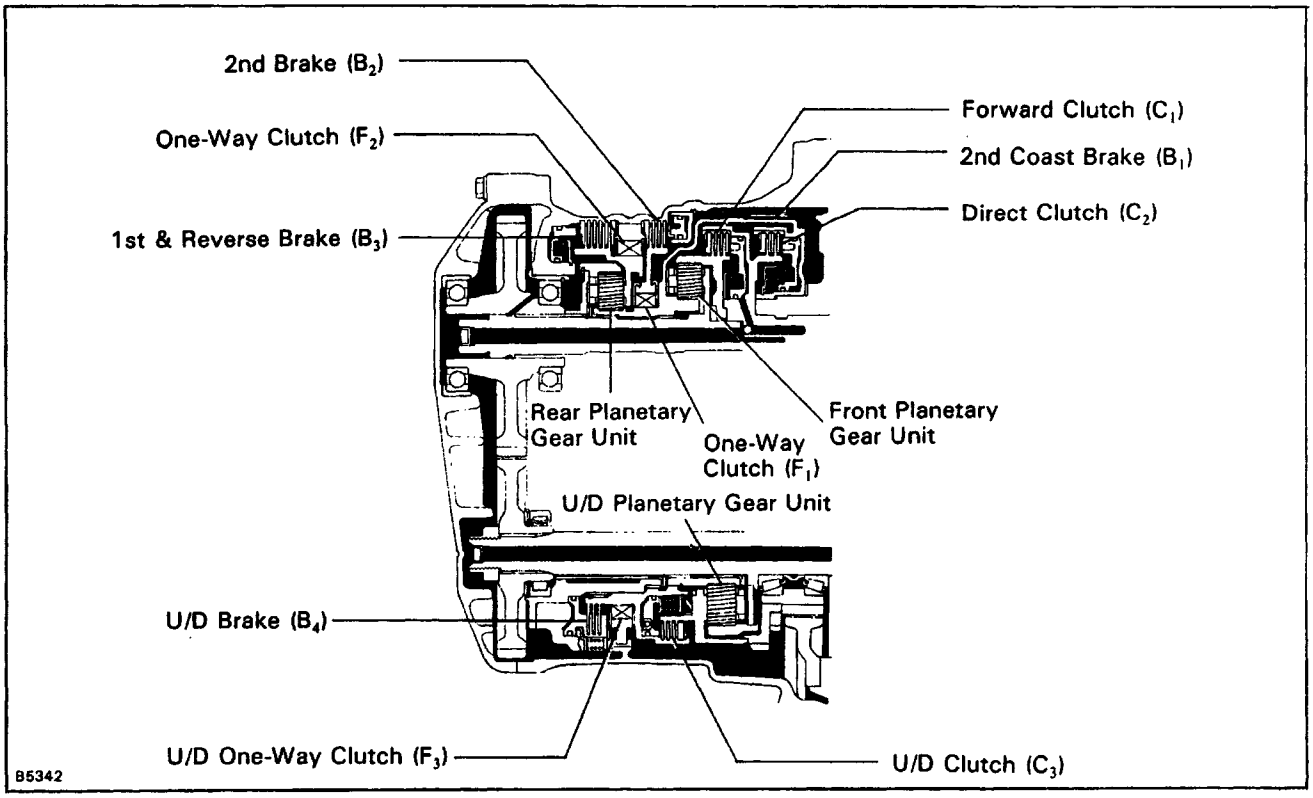

O ... Operating

Shift fever position	Gear position	C_1	C_2	C_3	B_1	B_2	B_3	B_4	F_1	F_2	F_3
P	Parking							○			
R	Reverse		○				○	○			
N	Neutral							○			
D	**1st**	○						○		○	○
	2nd	○				○		○	○		○
	3rd	○	○			○		○			○
	OD	○	○	○		○					
2	1st	○						○		○	○
	2nd	○			○	○		○	○		○
L	**1st**	○					○	○		○	○
	* 2nd	○			○	○		○	○		○

* Down-shift only in L range, 2nd gear — no up-shift.

W00654

1. FUNCTION OF COMPONENTS

Component		Function
C_1	Forward Clutch	Connects input shaft and front planetary ring gear.
C_2	Direct Clutch	Connects input shaft and front & rear planetary sun gear.
C_3	U/D Clutch	Connects underdrive sun gear and underdrive planetary carrier.
B_1	2nd Coast Brake	Prevents front & rear planetary sun gear from turning either clockwise or counterclockwise.
B_2	2nd Brake	Prevents outer race of F_1 from turning either clockwise or counterclockwise thus preventing the front & rear planetary sun gear from turning counterclockwise.
B_3	1st & Reverse Brake	Prevents rear planetary carrier from turning either clockwise or counterclockwise.
B_4	U/D Brake	Prevents underdrive sun gear from turning either clockwise or counterclockwise.
F_1	No. 1 One–Way Clutch	When B_2 is operating, this clutch prevents the front & rear planetary sun gear from turning counterclockwise.
F_2	No.2 One–Way Clutch	Prevents rear planetary carrier from turning counterclockwise.
F_3	U/D One–Way Clutch	Prevents underdrive planetary sun gear from turning clockwise.
Planetary Gears		These gears change the route through which driving force is transmitted in accordance with the operation of each clutch and brake in order to increase or reduce the input and output speed.

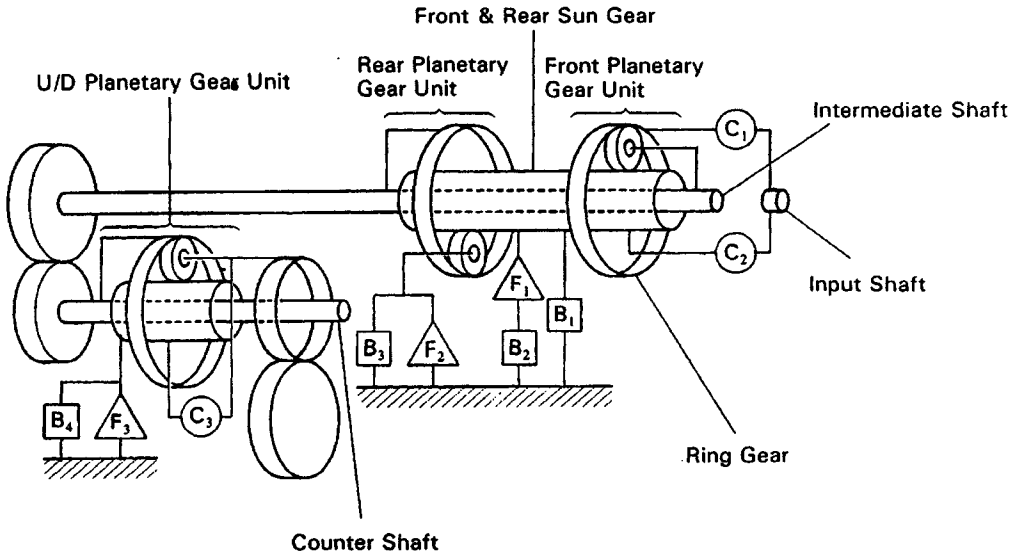

D or 2 Range 1st Gear

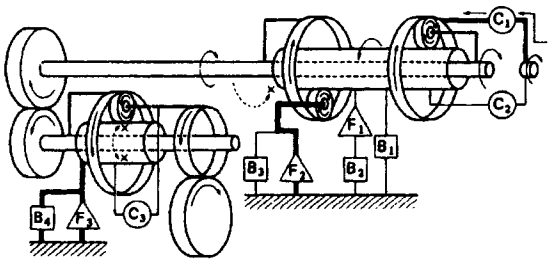

AT3216

2 Range 2nd Gear

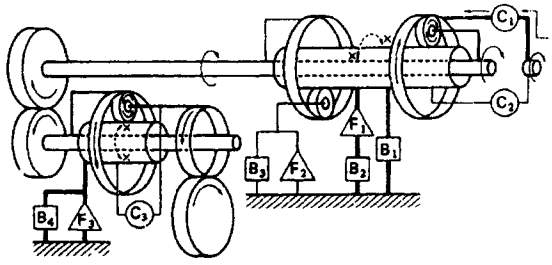

AT3220

D Range 2nd Gear

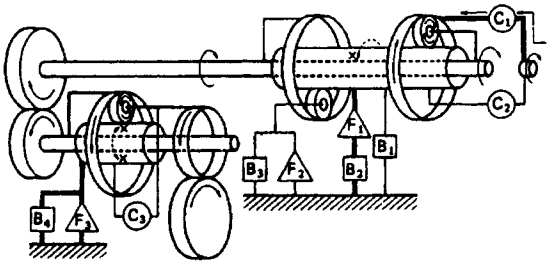

AT3217

L Range 1st Gear

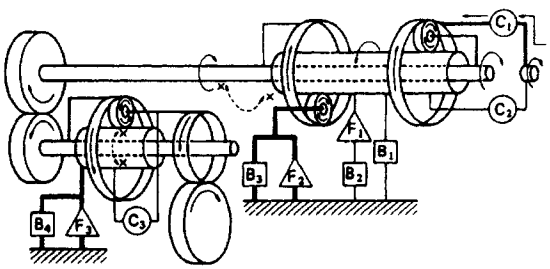

AT3221

D Range 3rd Gear

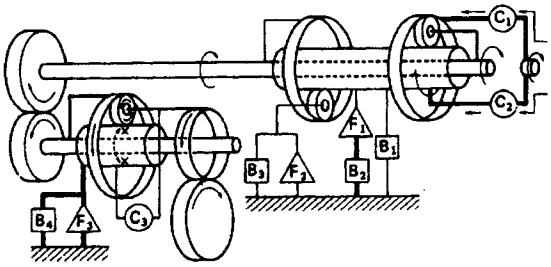

AT3218

R Range Reverse Gear

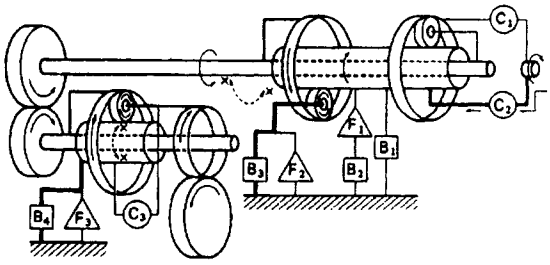

AT3222

D Range O/D

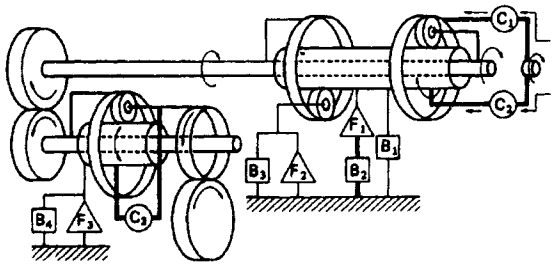

AT3219

V00644

2. Hydraulic Control System

The hydraulic control system is composed of the oil pump, the valve body, the solenoid valves, the accumulators, the clutches and brakes as well as the fluid passages which connect all of these components.

Based on the hydraulic pressure created by the oil pump, the hydraulic control system governs the hydraulic pressure acting on the torque converter,clutches and brakes in accordance with the vehicle driving conditions.

There are three solenoid valves on the valve body.

The No. 1 and No.2 solenoid valves are turned on and off by signals from the PCMT to operate the shift valves and change the gear shift position.

The transaxle converter clutch switch valve is operated by signals from the PCMT to engage or disengage the lock–up clutch of the torque converter.

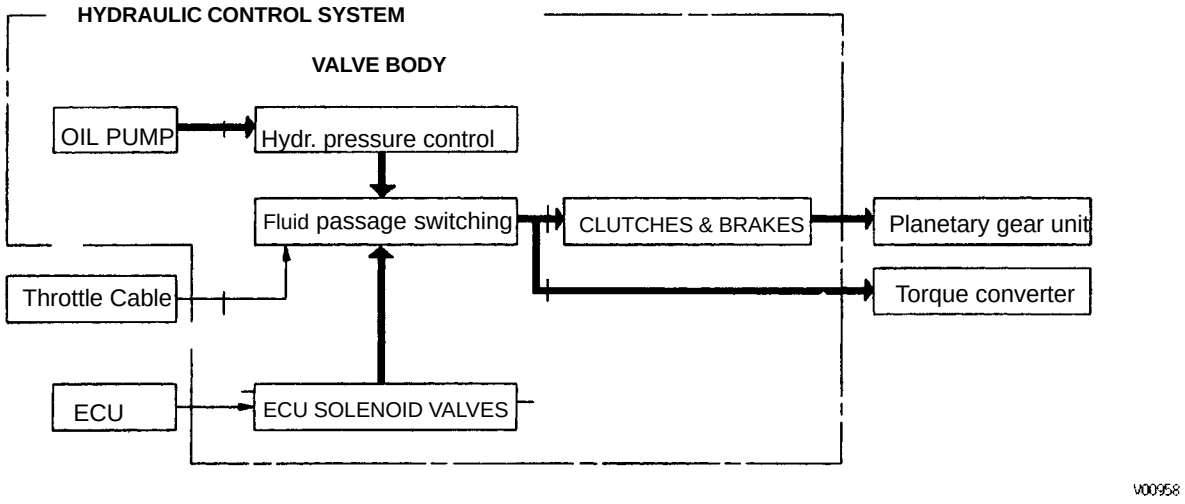

3. Electronic Control System

The electronic control system for controlling the shift timing and the operation of the lock–up clutch is composed of the following three parts:

(a) Sensors: These sense the vehicle speed and throttle position and send this data to the PCMT in the form of electronic signals.

(b) PCMT: This determines the shift and lock–up timing based upon the signals from the sensors.

(c) Actuators: Solenoid valves divert hydraulic pressure from one circuit of the hydraulic control unit to another, thus controlling shifting and lock–up timing.

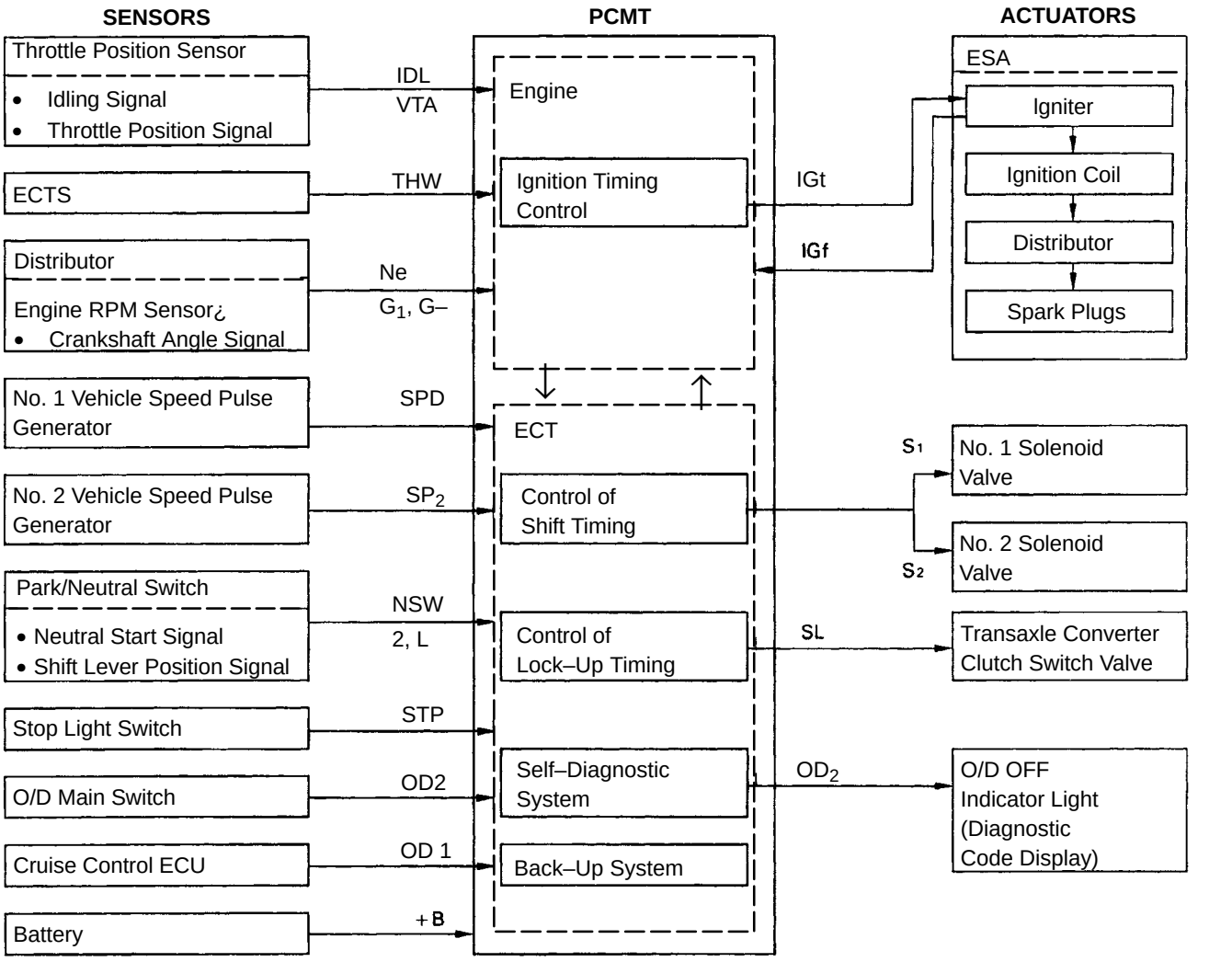

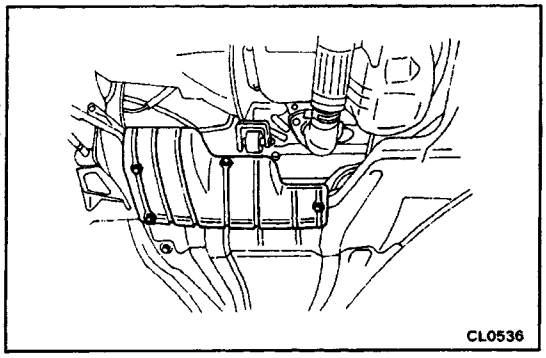

PARK NEUTRAL SWITCH (PNS) AX07A–01

PARK NEUTRAL SWITCH REMOVAL

7. REMOVE NO.7 ENGINE UNDER COVER

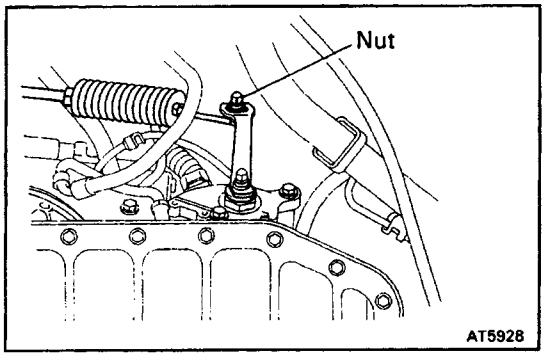

2. DISCONNECT SHIFT CABLE FROM MANUAL SHIFT LOVER

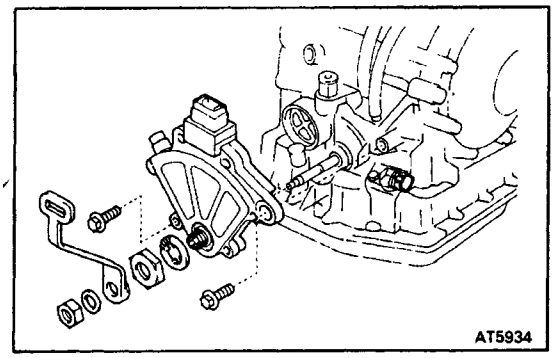

3. REMOVE PARK NEUTRAL SWITCH

(a) Remove the manual shift lever.
(b) Pry off the lock plate and remove the manual valve shaft nut.
(c) Remove the two bolts and pull out the PARK NEUTRAL switch.

AX011–01

PARK NEUTRAL SWITCH INSTALLATION

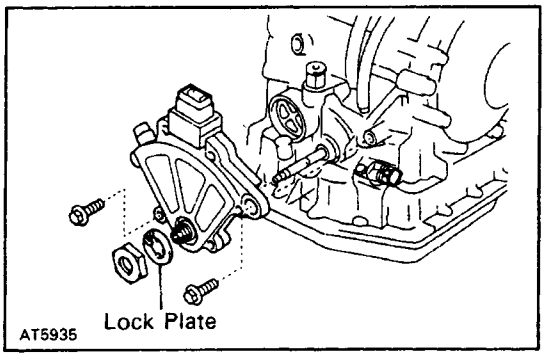

1. INSTALL PARK NEUTRAL SWITCH

(a) Install the PARK NEUTRAL switch to the manual valve shaft.
(b) Install the new lock plate and tighten the nut.
(c) Stake the nut with lock plate.

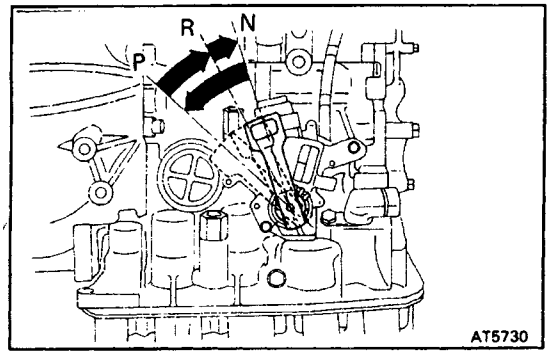

(d) Temporarily install the manual shift lever.
(e) Turn the lever counterclockwise until it stops, then turn it clockwise two notches.
(f) Remove the manual shift lever.

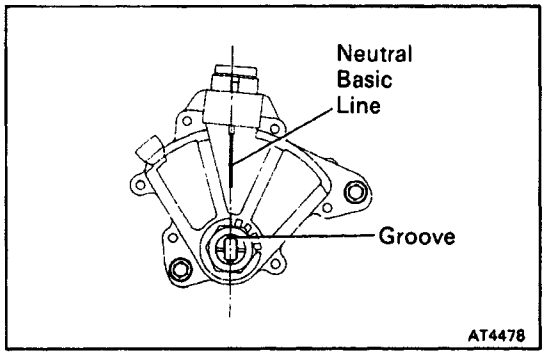

(g) Adjust the PARK NEUTRAL switch.
(See page AX–16)
HINT: Align the groove and neutral basic line.

(h) Install and tighten the two bolts.
Torque: 5.4 N–m (55 kgf–cm, 48 in.–lbf)

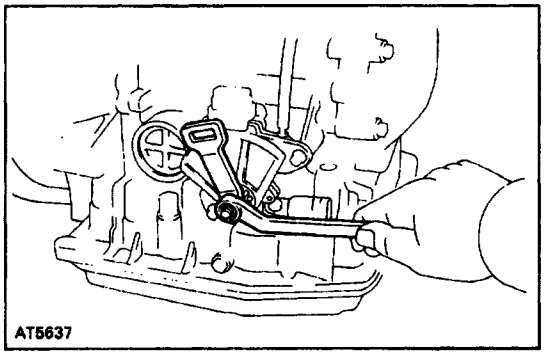

2. INSTALL MANUAL SHIFT LEVER

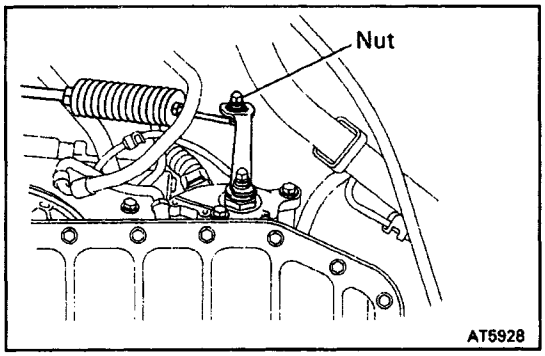

3. CONNECT SHIFT CABLE TO MANUAL SHIFT LEVER

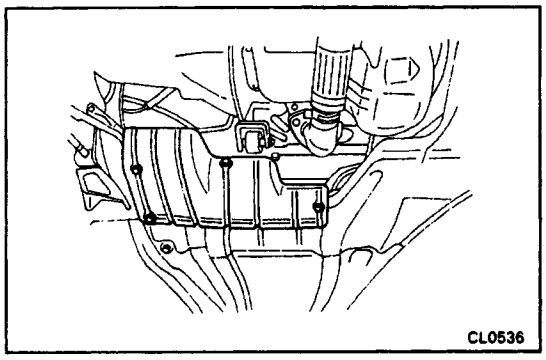

4. INSTALL NO.1 ENGINE UNDER COVER

PREPARATION

SST (SPECIAL SERVICE TOOLS)

AX06J–01

	09308–00010 Oil Seal Puller	Remove side gear shaft oil seal.
	09350–32014 TOYOTA Automatic Transmission Tool Set	
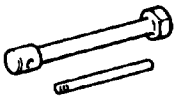	(09351–32010) One–way Clutch Test Tool	
	(09351–32020) Stator Stopper	
	(09351–32111) Side Bearing Race Replacer	
	(09351–32130) Handle	
	(09351–32150) Oil seal Replacer	
	09628–62011 Ball Joint Puller	
	09643–18020 Diagnosis Check Wire	
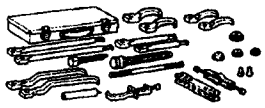	09950–20017 Universal Puller	
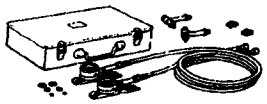	09992–00094 Automatic Transmission Oil Pressure Gauge Set	Line pressure

AX06K–01

EQUIPMENT

Straight edge	Check torque converter installation.
Vernier calipers	Check torque converter installation.
Dial indicator or dial indicator with magnetic base	Measure drive plate runout.
Torque wrench	

AX06L–01

LUBRICANT

Item	Capacity	Classification
Automatic transaxle fluid (w/o Differential oil) Dry fill Drain and refill	 8.0 liters (8.5 US qts, 7.0 Imp.qts) 3.3 liters (3.5 US qts, 2.9 Imp.qts)	ATF DEXRON* II

AX06M–01

SSM (SPECIAL SERVICE MATERIALS)

08833–00070 Adhesive 1324, THREE BOND 1324 or equivalent	Torque converter mounting bolt

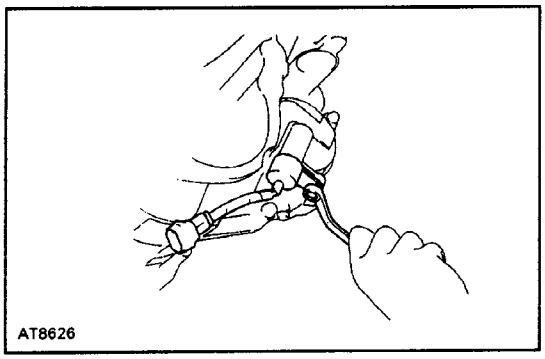

SENSOR ROTOR

AX078–01

SENSOR ROTOR REMOVAL

REMOVE SPEED SENSOR AND SENSOR ROTOR

(a) Remove the retaining plate and pull out the speed sensor.

(b) Remove the O–ring from speed sensor.

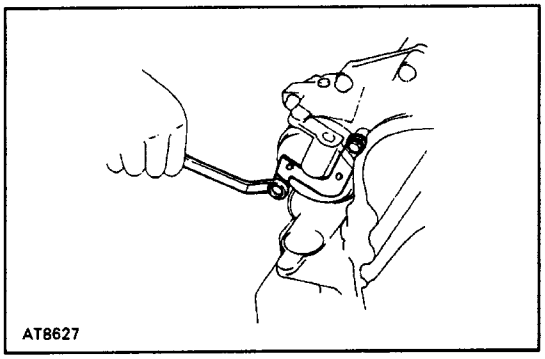

(c) Remove the two bolts and sensor cover bracket.

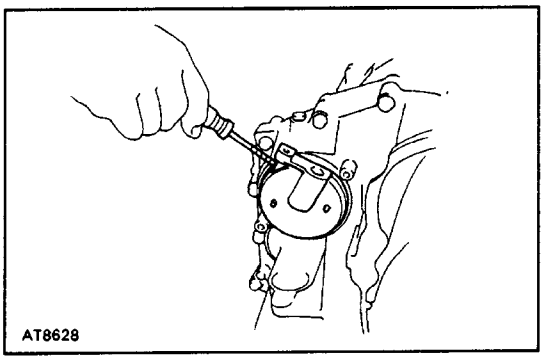

(d) Using a screwdriver, remove the sensor cover.

HINT: Tape the screwdriver tip before use so as not to damage the cover or transaxle.

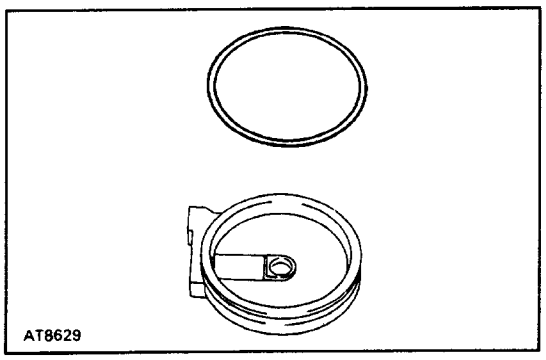

(e) Remove the O–ring from the sensor cover.

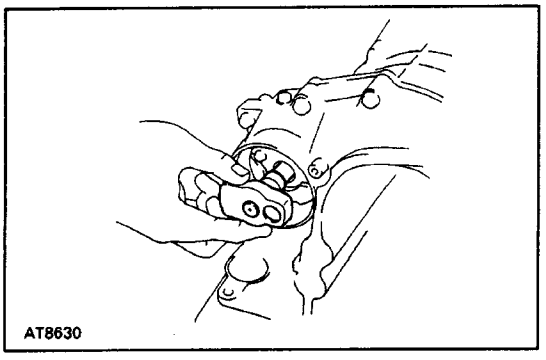

(f) Remove the sensor rotor.

AX079 – 01

SENSOR ROTOR INSTALLATION

INSTALL SPEED SENSOR AND SENSOR ROTOR

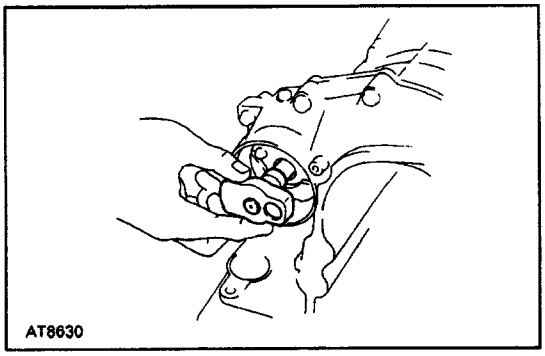

(a) Install the sensor rotor.

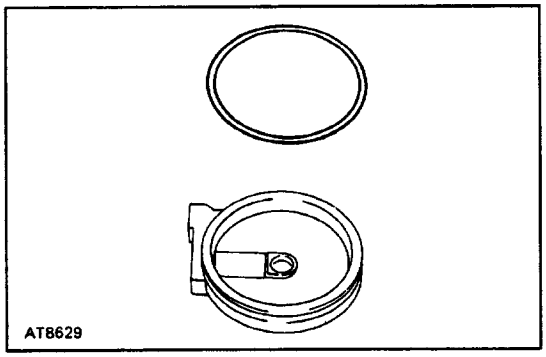

(b) Install a new O–ring to the sensor cover.

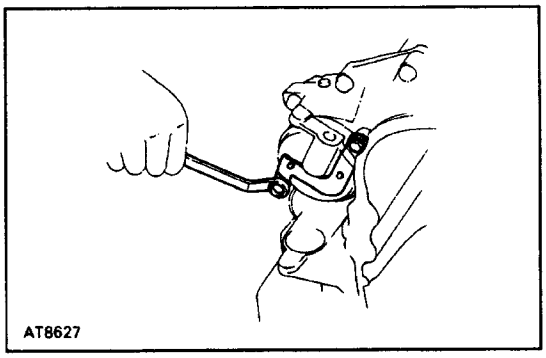

(c) Install the sensor cover to the transmission and then install the sensor cover bracket with the two bolts.

Torque: 5.4 N–m (55 kgf–cm, 48 in.–lbf)

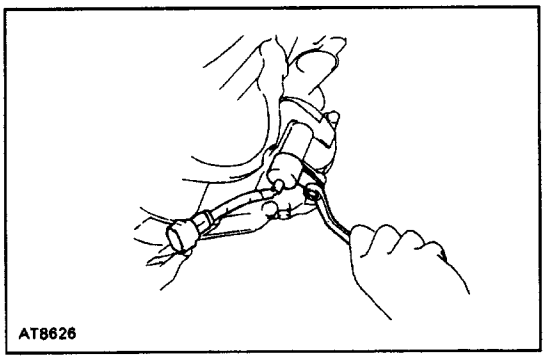

(d) Coat a new O–ring with ATF and install it to the speed sensor.
(e) Install the speed sensor and retaining plate.

Torque: 5.4 N–m (55 kgf–cm, 48 in.–lbf)

SERVICE SPECIFICATIONS

AX07M–01

SERVICE DATA

Line pressure				
Engine idling	D range	373 – 422 kPa	3.8 – 4.3 kgf/cm²	54 – 61 psi
	R range	637 – 794 kPa	6.5 – 8.1 kgf/cm²	92 – 115 psi
At Stall	D range	716 – 863 kPa	7.3 – 8.8 kgf/cm²	104 – 125 psi
(Throttle valve fully opened)	R range	1,334 – 1,579 kPa	13.6 – 16.1 kgf/cm²	193 – 229 psi
Engine stall revolution		2,650 ± 150 rpm		
Time lag N range→ D range		Less than 1.2 seconds		
N range→ R range		Less than 1.5 seconds		
Engine idling speed (A/C OFF)	N range	700 ±150 rpm		
Throttle cable adjustment				
Throttle valve fully opened		Between boot end face and inner cable stopper		
		0 – 1 mm	0 – 0.04 in.	
Torque converter sleeve runout	Limit	0.30 mm	0.0118 in.	
Torque converter installation distance		26.0 mm	1.024 in.	
Drive plate runout	Limit	0.20 mm	0.0079 in.	

Shift point km/h (mph)		Throttle valve fully open [ ]Fully closed							
		1–2	2–3	3 →O/D	[3–O/Dl	[O/D–31	O/D–3	3–2	2 → 1
	D range	53 – 59 (33 – 37)	98 – 109 (61 – 68)	131 – 143 (81 – 89)	44 – 50 (27 – 31)	18 – 23 (11 – 14)	125 – 137 (78 – 85)	93 – 104 (58 – 65)	42 – 48 (26 – 30)
	2 range	53 – 59 (33 – 37)	–	–	–	–	–	–	42 – 49 (26 – 30)
	L range	–	–	–	–	–	–	–	47 – 53 (29 – 33)

Lock–up point km/h (mph)		Throttle valve opening 596	
		Lock–up ON	Lock–up OFF
		O/D	O/D
	D range	64 – 71 (40 – 44)	59 – 65 (37 – 40)

V01061

AX07N – 01

TORQUE SPECIFICATIONS

Part tightened		N–m	kgf–cm	ft–lbf
Engine mount bracket x Transmission case		52	530	38
Oil pan drain plug		17	175	13
Transaxle x Engine	12 mm bolt	64	650	47
	10 mm bolt	46	470	34
Rear end plate set bolt		9	95	82 in.·lbf
Stiffener plate x Engine		37	380	27
Stiffener plate x Transaxle		37	380	27
Engine LH mounting set bolt		64	650	47
Suspension crossmember x Body		113	1,150	83
Suspension arm x Rear axle hub		103	1,050	76
Lower arm x Suspension crossmember		132	1,350	98
Engine rear mounting x Transaxle		77	790	57
Engine rear mounting x Crossmember		64	650	47
Engine rear mounting through bolt		87	890	64
Engine front mounting x Transaxle		77	790	57
Engine front mounting x Transaxle		77	790	57
Engine front mounting x Body		73	740	54
Engine front mounting through bolt		96	980	71
Front exhaust pipe x Tail pipe		62	630	46
Front exhaust pipe x Exhaust manifold		62	630	46
Transaxle x Starter		39	400	29
LH engine mounting x Body		73	740	54
LH engine mounting stay x Transaxle		25	250	18
PARK NEUTRAL switch x Transaxle case		5.4	55	48 in.·lbf
Valve body x Transaxle case		10	100	7
Manual detent spring x Valve body		10	100	7
Kick–down pressure switch x Valve body		6.4	65	48 in.·lbf
Oil tube bracket x Valve body		10	100	7
Apply tube bracket x Valve body		10	100	7
Vehicle speed pulse generator retaining plate		5.4	55	48 in.·lbf
Sensor cover bracket		5.4	55	48 in.·lbf
Oil pan x Transaxle case		4.9	50	43 in.·lbf
Torque converter x Drive plate		27	280	20
Drive plate x Crankshaft		88	900	65

SHIFT LOCK SYSTEM

AX07K–01

COMPONENT AND CIRCUIT

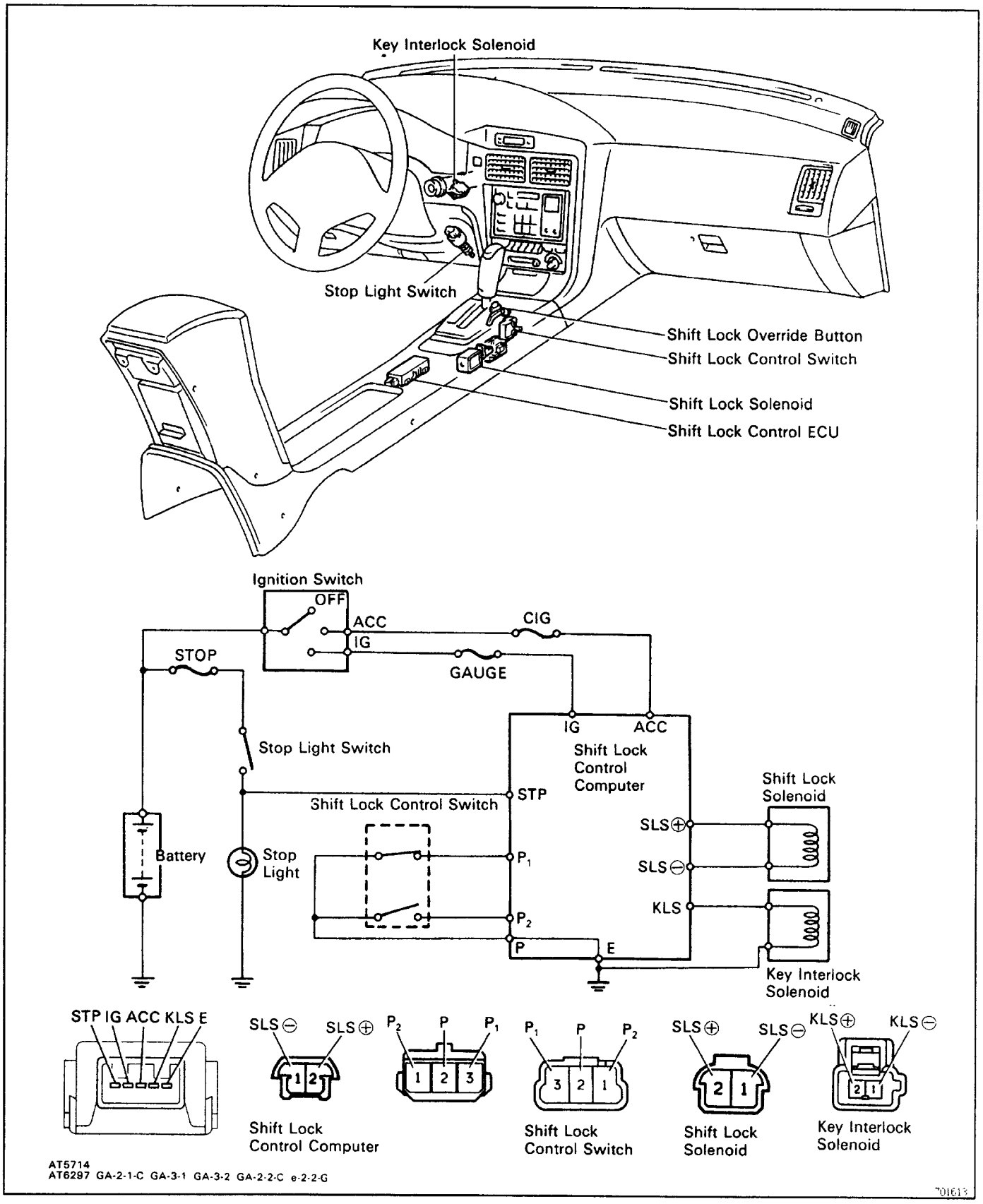

AX07L-01

ELECTRIC CONTROL COMPONENTS INSPECTION

1. INSPECT SHIFT LOCK CONTROL ECU

Do not disconnect the ECU connector.

Measure the voltage and continuity between terminals.

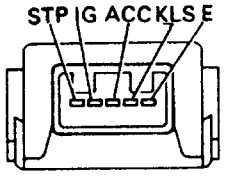

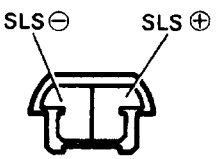

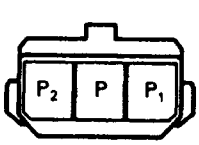

AT6297 GA-2-1-1-C GA-3-1

Connector	Terminal	Measured Item	Measuring Condition	Specified Value
A	ACC – E	Voltage	Ignition switch ACC position	10 – 14 V
	IG – E	Voltage	Ignition switch ON position	10 – 14 V
	KLS – E	Voltage	(1) Ignition switch ACC position and “P” range	0 V
			(2)Ignition switch ACC position and other than “P” range	7.5 – 11.5 V
			(3) (2) and approx–after one second	6 – 9 V
	E – Ground	Continuity	Ail conditions	Continuity
	STP – E	Voltage	Release brake pedal	0 V
			Depress brake pedal	10 – 14V
B	SLS⊖ – E	Continuity	All conditions	Continuity
	SLS⊕ – E	Voltage	(1) Ignition switch ON position and “P” range	0 V
			(2) (1) and depress brake pedal	8.5 – 13.5 V
			(3) (2) and release brake pedal or (2) and shift to range other than “P” range	0 V
C	P_2 – E	Voltage	(1) Ignition switch ACC position and “P” range	0 – 13.5 V
			(2) (1) and push the shift lever knob, or Ignition . switch ACC position and shift to range other than “P” range.	0 V
	P – E	Continuity	All conditions	Continuity
	P_1 – E	Voltage	Ignition switch 4N position, “P” range and brake pedal depressed.	0 V
			Ignition switch ON position brake pedal depressed and shift to range other than “P” range	9 – 13.5 V

V00951

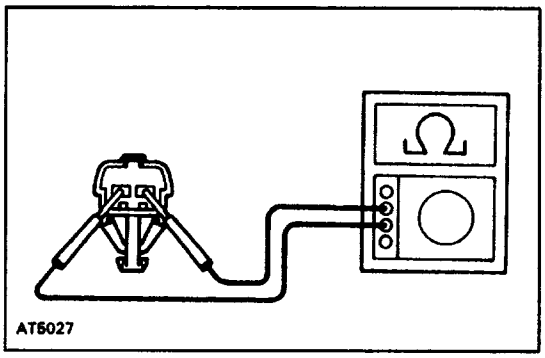

2. INSPECT SHIFT LOCK SOLENOID

(a) Disconnect the solenoid connector.

(b) Using an ohmmeter, measure the resistance between terminals.

Standard resistance:

21–27 Ω

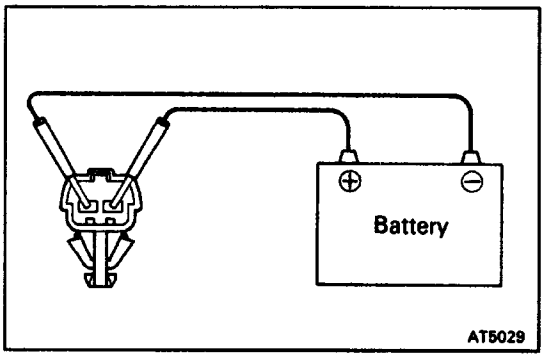

(c) Apply battery voltage between terminals. Check that an operation noise can be heard from the solenoid.

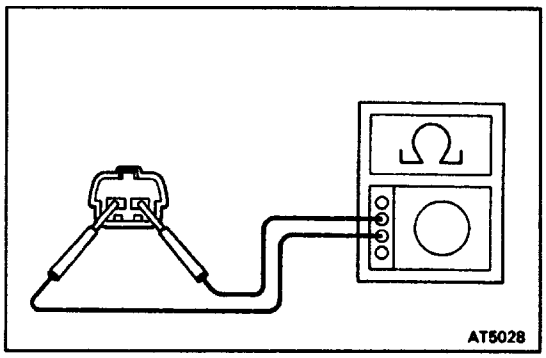

3. INSPECT KEY INTERLOCK SOLENOID

(a) Disconnect the solenoid connector.

(b) Using an ohmmeter, measure the resistance between terminals.

Standard resistance:

12.5–16.5Ω

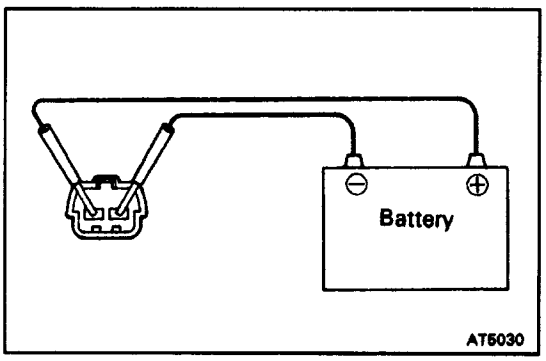

(c) Apply the battery voltage between terminals. Check that an operation noise can be heard from the sole–noid.

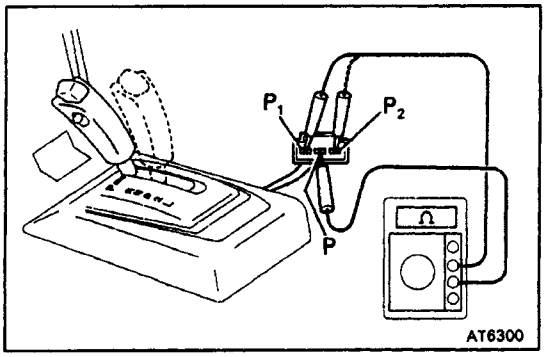

4. INSPECT SHIFT LOCK CONTROL SWITCH

Check whether there is continuity between each terminals.

O–O: Continuity

Shift Position \ Terminal	P	P_1	≥ N
P range (Release button is not pushed)	O—O		
P Range (Release button is pushed)	O—O		O
R, N, O, 2, L range	O		O

V00994

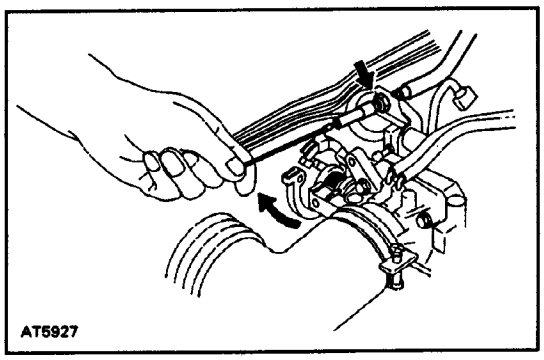

THROTTLE CABLE

AX076–01

THROTTLE CABLE REMOVAL

1. DISCONNECT THROTTLE CABLE FROM ENGINE

Disconnect the cable from the throttle linkage.

2. DRAIN TRANSAXLE FLUID

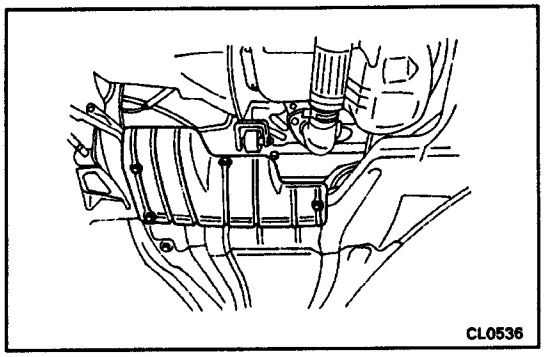

3. REMOVE NO.1 ENGINE UNDER COVER

4. REMOVE PARK/NEUTRAL SWITCH

(See page AX–57)

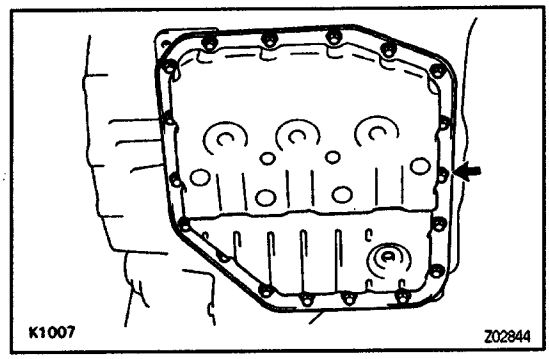

5. REMOVE OIL PAN AND GASKET

NOTICE: Some fluid will remain in the oil pan. Remove oil pan bolts, and carefully remove oil pan assembly. Discard the gasket.

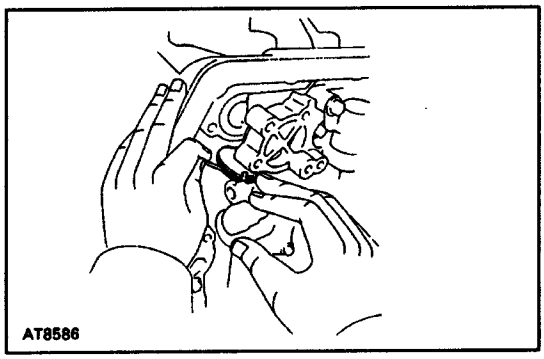

6. DISCONNECT THROTTLE CABLE FROM VALVE BODY

Disconnect the throttle cable from the cam.

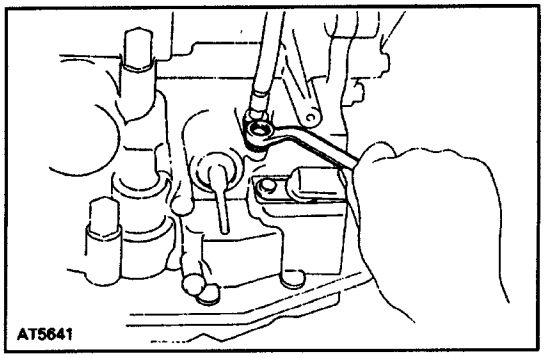

7. REMOVE THROTTLE CABLE

(a) Remove the retaining bolt and plate.

(b) Pull out the cable from the transaxle case.

AX077–01

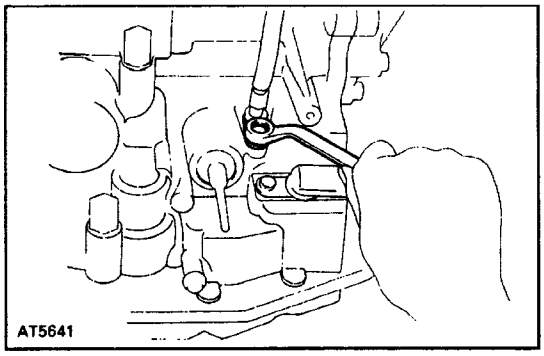

THROTTLE CABLE INSTALLATION

1. INSTALL CABLE INTO TRANSMISSION CASE

(a) Push the cable throttle the hole on the case, being careful not to damage the O–ring. Check for full seating.

NOTICE: In subsequent work, do not roll the case over the cable to avoid breaking the cable fitting.

(b) Install the retaining plate and bolt.

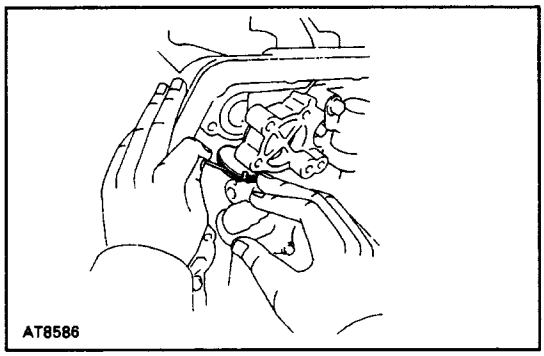

2. CONNECT THROTTLE CABLE TO VALVE BODY

Connect the throttle cable to the cam.

3. INSTALL OIL PAN AND OIL PAN DRAIN PLUG

(See page AX–52)

4. INSTALL AND ADJUST PARK/NEUTRAL SWITCH

(See page AX–15)

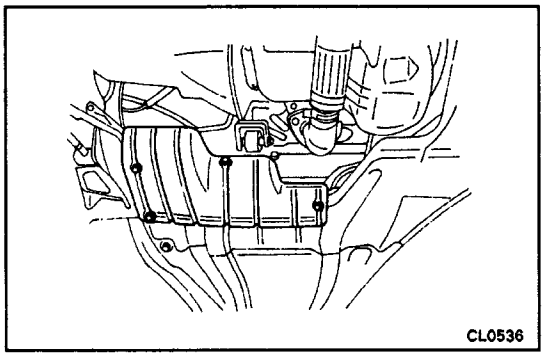

5. INSTALL NO.1 ENGINE UNDER COVER

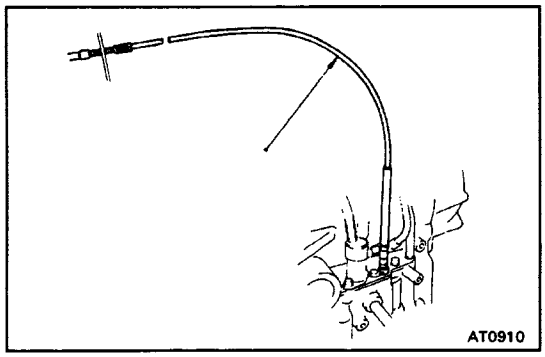

6. IF THROTTLE CABLE IS NEW, STAKE STOPPER OR PAINT MARK ON INNER CABLE

HINT:New cable do not have a cable stopper staked.

(a) Bend the cable so there is a radius of about 200 mm (7.87 in.).

(b) Pull the inner cable lightly until a slight resistance is felt, and hold it.

(c) Stake the stopper, 0.8–1.5 mm (0.031–0.059 in.) from the end of outer cable.

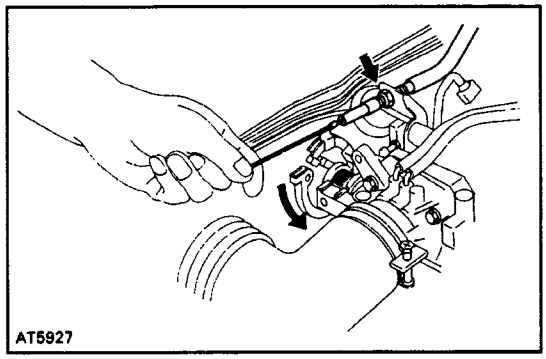

7. CONNECT THROTTLE CABLE TO ENGINE

8. ADJUST THROTTLE CABLE

(See page AX–15)

9. FILL TRANSAXLE WITH ATF

(See page AX–14)

NOTICE: Do not overfill.

Fluid type:

ATF DEXRON®II

10. CHECK FLUID LEVEL

TROUBLESHOOTING

Trouble occurring in the ECT can stern from one of three sources: the engine, the ECT electronic control unit or the transmission itself. Before troubleshooting, determine in which these three sources the problem lies, and begin troubleshooting with the simplest operation, gradually working up in order or difficulty.

BASIC TROUBLESHOOTING

AX06P–01

Before troubleshooting and ECT, first determine whether the problem is electrical or mechanical. To do this, just refer to the basic troubleshooting flow–chart provided below.
If the cause is already known, using the basic troubleshooting chart below along with the general troubleshooting chart on the following page should speed the procedure.

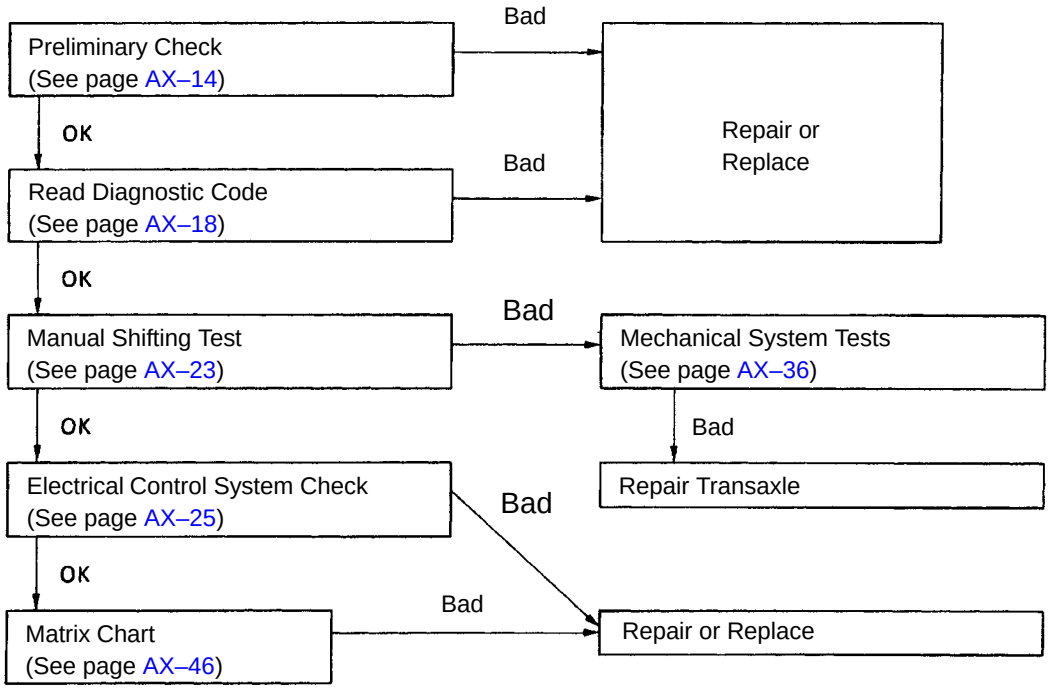

V01003

GENERAL TROUBLESHOOTING

AX06Q – 01

NOTICE: Refer to A241 E Automatic Transaxle Repair Manual (Pub. No. RM291 U) when * mark appears in the column for page numbers.

Problem	Possible cause	Remedy	Page
Fluid discolored or smells burnt	Fluid contaminated Torque converter faulty Transaxle faulty	Replace fluid Replace torque converter Disassemble and inspect transaxle	AX–14 AX–66 ★
Vehicle does not move in any forward range or reverse	Shift cable out of adjustment Valve body or primary regulator faulty Parking lock pawl faulty Torque converter faulty Converter drive plate broken Oil strainer intake screen blocked Transaxle faulty	Adjust shift cable Inspect valve body Inspect parking lock pawl Replace torque converter Replace drive plate Clean screen Disassemble and inspect transaxle	AX–15 ★ ★ AX–66 AX–66 ★ ★
Shift lever position incorrect	Shift cable out of adjustment Manual valve and lever faulty Transaxle faulty	Adjust shift cable Inspect valve body Disassemble and inspect transaxle	AX–15 ★ ★
Harsh engagement into any drive range	Throttle cable out of adjustment Valve body or primary regulator faulty Accumulator pistons faulty Transaxle faulty	Adjust throttle cable Inspect valve body inspect accumulator pistons Disassemble and inspect transaxle	AX–15 ★ ★
Delayed 1–2, 2–3 or 3–O/D up–shift, or down–shifts from O/D–3 or 3–2 and shift back to O/D or 3	Electronic control faulty Valve body faulty Solenoid valve faulty Throttle cable out of adjustment	Inspect electronic control Inspect valve body Inspect solenoid valve Adjust throttle cable	AX–25 ★ AX–33 AX–15
Slips on 1–2, 2–3 or 3–O/D up–shift, or slips or shudders on acceleration	Shift cable out of adjustment Throttle cable out of adjustment Valve body faulty Solenoid valve faulty Transaxle faulty	Adjust shift cable Adjust throttle cable Inspect valve body Inspect solenoid valve Disassemble and inspect transaxle	AX–15 AX–15 ★ AX–33 ★
Drag, binding or tie–up on 1–2, 2–3, or 3–O/D up–shift	Shift cable out of adjustment Valve body faulty Transaxle faulty	Adjust shift cable Inspect valve body Disassemble and inspect transaxle	AX–15 ★ ★

NOTICE: Refer to A241 E Automatic Transaxle Repair Manual (Pub. No. RM291 U) when * mark appears in the column for page numbers.

Problem	Possible cause	Remedy	Page
No lock–up in 2nd, 3rd or O/D	Electronic control faulty Valve body faulty Solenoid valve faulty Transaxle faulty	Inspect electronic control Inspect valve body Inspect solenoid valve Disassemble and inspect transaxle	AX–25 ★ AX–33 ★
Harsh down–shift	Throttle cable out of adjustment Throttle cable and cam faulty Accumulator pistons, faulty Valve body faulty Transaxle faulty	Adjust throttle cable Inspect throttle cable and cam Inspect accumulator pistons Inspect valve body Disassemble and inspect transaxle	AX–15 ★ ★ ★ ★
No down–shift when coasting	Valve body faulty Solenoid valve faulty Electronic control faulty	Inspect valve body Inspect solenoid valve Inspect electronic control	★ AX–33 AX–25
Down–shift occurs too quickly or too late while coasting	Throttle cable faulty Valve body faulty Transaxle faulty Solenoid valve faulty Electronic control faulty	Inspect throttle cable Inspect valve body Disassemble and inspect transaxle Inspect solenoid valve Inspect electronic control	AX–15 ★ ★ AX–33 AX–25
No O/D–3, 3–2 or 2–1 kick–down	Solenoid valve faulty Electronic control faulty Valve body faulty Throttle cable out of adjustment	Inspect solenoid valve Inspect electronic control Inspect valve body Adjust throttle cable	AX–33 AX–25 ★ AX–15
No engine braking in 2 or L range	Solenoid valve faulty Electronic control faulty Valve body faulty Transaxle faulty	Inspect solenoid valve Inspect electronic control Inspect valve body Disassemble and inspect transaxle	AX–33 AX–25 ★ ★
Vehicle does not hold in P range	Shift cable out of adjustment Parking lock pawl and spring faulty	Adjust shift cable Inspect cam and spring	AX–15 ★

V00987

AX06R–01

PRELIMINARY CHECK

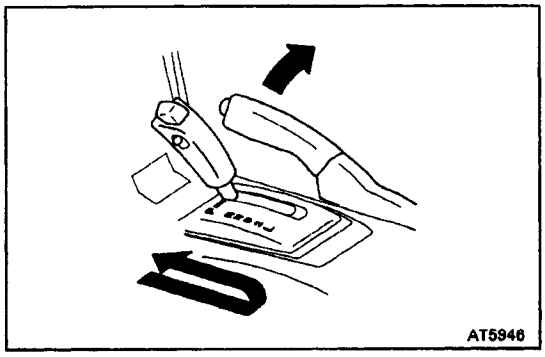

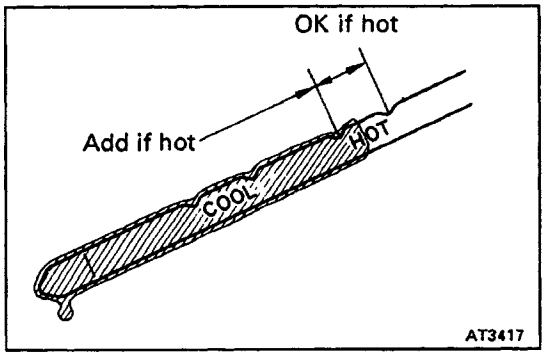

1. CHECK TRANSAXLE FLUID LEVEL

HINT: The vehicle must have been driven so that the engine and transaxle. are at normal operating tem–perature. (fluid temperature: 70–80˚C or 158–176˚F)

(a) Park the vehicle on a level surface, set the parking brake.

(b) With the engine idling and the brake pedal depressed, shift the shift lever into each gear from the P range to L range smoothly and return to P range.
HINT: Depress the brake pedal.

(c) Pull out the transaxle dipstick and wipe it clean.

(d) Push it back fully into the tube.

(e) Pull it out and check that the fluid level is in the HOT range.
If the level is at the low side of the hot range, add fluid.
Fluid type:
ATF DEXRON®II
NOTICE: Do not overfill.

2. CHECK FLUID CONDITION

If the fluid smells burnt or is black, replace it.

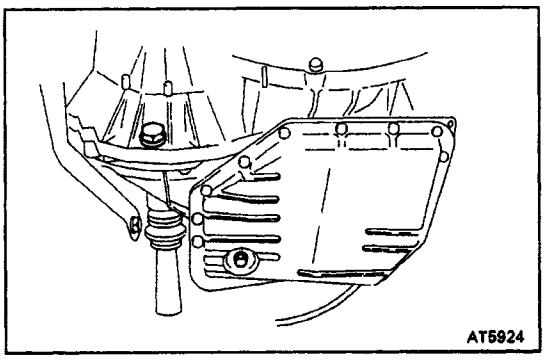

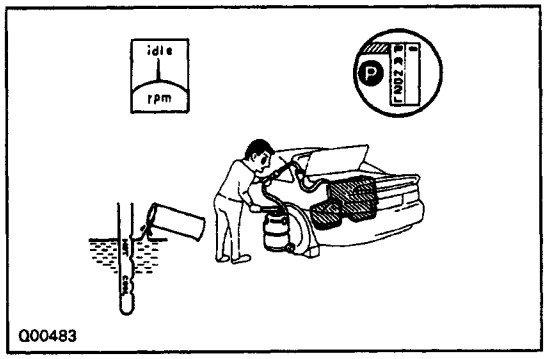

3. REPLACE ATF

NOTICE: Do not overfill.

(a) Remove the drain plug, gasket and drain the fluid.

(b) Install a new gasket and the drain plug securely.

(c) Add new fluid through the filler tube.
Fluid:
ATF DEXRON®II
Capacity:
8.0 liters (8.5 US qts, 7.0 Imp.qts)
Drain and refill:
3.3 liters (3.5 US qts, 2.9 Imp.qts)

(d) Start the engine and shift the selector into all posi–tions from P through L and then shift into P.

(e) With the engine idling, check the fluid level. Add fluid up to the COOL level on the dipstick.

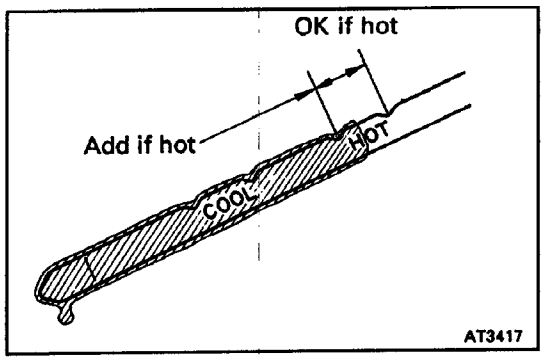

(f) Check the fluid level with the normal fluid temperature (158–176°F or 70–80°C) and add as necessary.
NOTICE: Do not overfill.

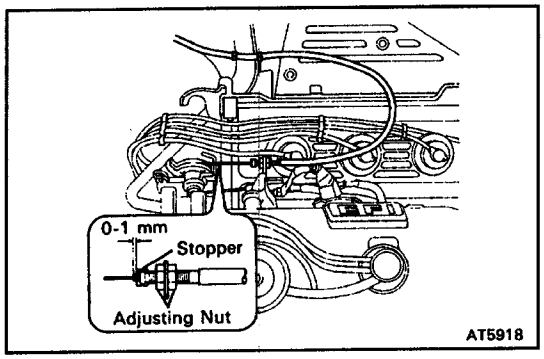

4. INSPECT AND ADJUST THROTTLE CABLE
(a) Check that the throttle valve is fully closed.
(b) Check that the inner cable is not slack.
(c) Measure the distance between the outer cable end and stopper on the cable.
Standard boot and cable stopper distance:
0–1 mm (0–0.04 in.)
If the distance is not standard, adjust the cable by the adjusting nuts.

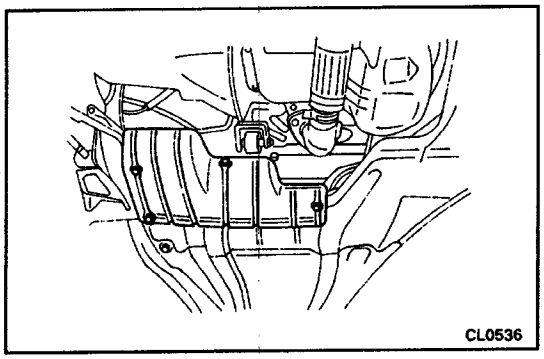

5. INSPECT AND ADJUST SHIFT CABLE
When shifting the shift lever from the N position to other positions, check that the lever can be shifted smoothly and accurately to each position and that the position indicator correctly indicates the position.
If the indicator is not aligned with the correct position, carry out the following adjustment procedure.
(a) Remove the No.1 engine under cover.

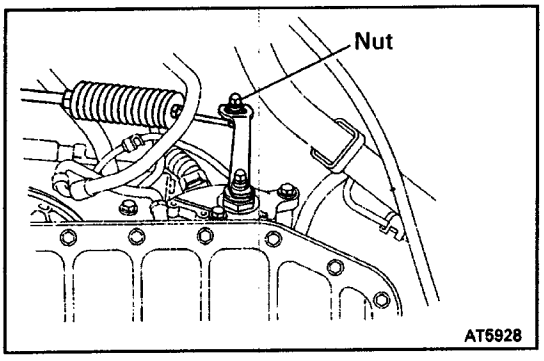

(b) Loosen the swivel nut on manual shift lever.

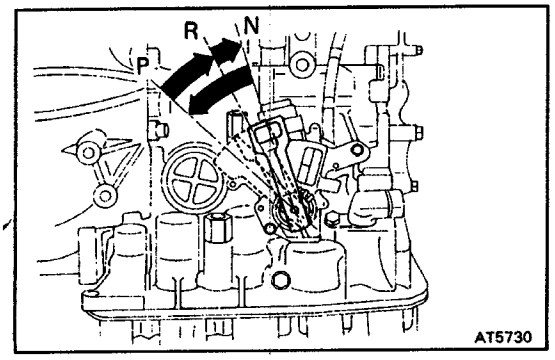

(c) Push the manual shift lever fully toward–the right side of the vehicle.
(d) Return the lever two notches to NEUTRAL position.
(e) Set the shift lever to N.
(f) While holding the lever lightly toward the R range side, tighten the swivel nut.
(g) Install the No.1 engine under cover.

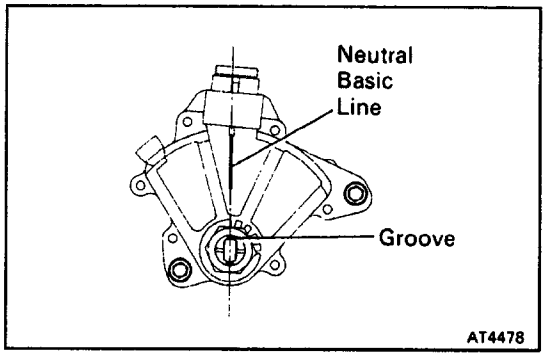

6. ADJUST PARK/NEUTRAL SWITCH

If the engine will start with the shift selector in any range other than N or P range, adjustment is required.

(a) Loosen the park/neutral switch bolts and set the shift selector to the N range.

(b) Align the groove and neutral basic line.

(c) Hold in position and tighten the bolts.

Torque:

5.4 N–m (55 kgf–cm, 48 in.–M)

7. INSPECT IDLE SPEED (N RANGE)

Idle speed:

800 rpm

AX06S - 01

DIAGNOSIS SYSTEM

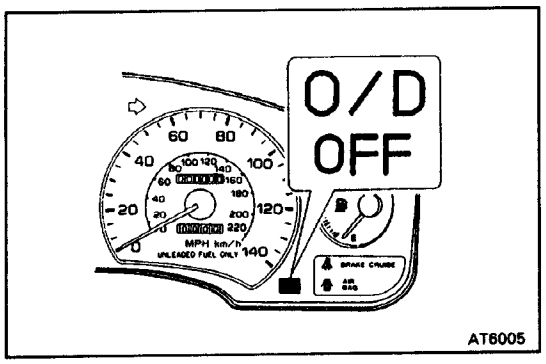

DESCRIPTION

1. A self–diagnosis function is built into the electrical control system. Warning is indicated by the overdrive OFF indicator light.
   HINT: Warning and diagnostic codes can be read only when the overdrive switch is ON. If OFF, the overdrive OFF light is lit continuously and will not blink.

(a) If a malfunction occurs within the speed sensors (No. 1 or 2) or solenoids (No. 1 or 2), the overdrive OFF light will blink to warn the driver.
However, there will be no warning of a malfunction with lock–up solenoid.

(b) The diagnostic code can be read by the number of blinks of the overdrive OFF indicator light when ter–minals TE, and E, are connected. (See page AX–25)

(c) The throttle position sensor or brake signal are not indicated, but inspection can be made by checking the voltage at terminal TT of the data link connector.

(d) The signals to each gear can be checked by measuring the voltage at terminal TT of the data link connector while driving.

2. The diagnostic code (trouble code) is retained in memory by the PCMT and due to back–up voltage, is not canceled out when the engine is turned off. Con–sequently, after repair, it is necessary to turn the ignition switch off and remove the EFI fuse (1 5A) or disconnect the PCMT connector to cancel out the diagnostic (trouble) code. (See page AX–19)
   HINT:
   - Low battery voltage will cause faulty operation of the diagnosis system. Therefore, always check the battery first.
   - Use a voltmeter and ohmmeter that have an im–pedance of at least 10 kΩ/V.

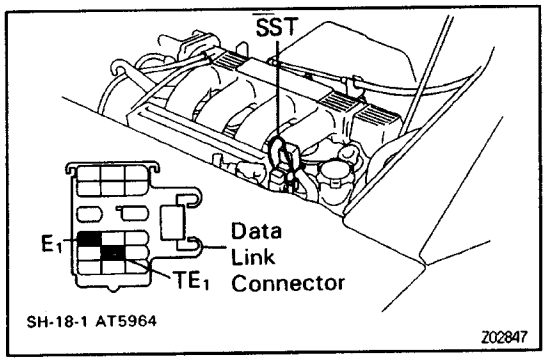

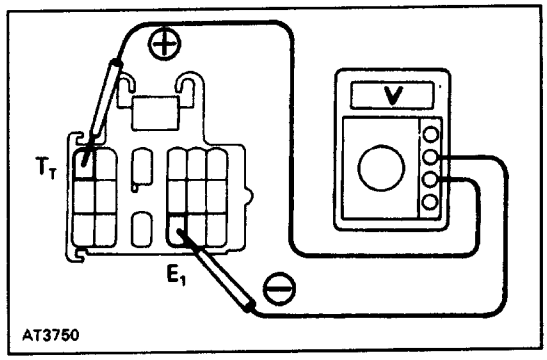

CHECK “O/D OFF” INDICATOR LIGHT

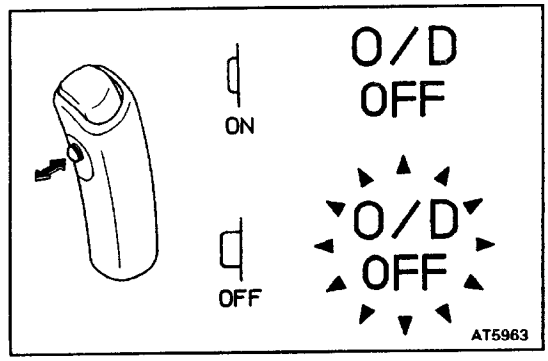

1. Turn the ignition switch ON.
2. The “O/D OFF” light will come on when the O/D switch is placed at OFF.
3. When the O/D switch is set to ON, the “O/D OFF” light should go out.
   If the “O/D OFF” light flashes when the O/D switch is set to ON, the electronic control system is faulty.

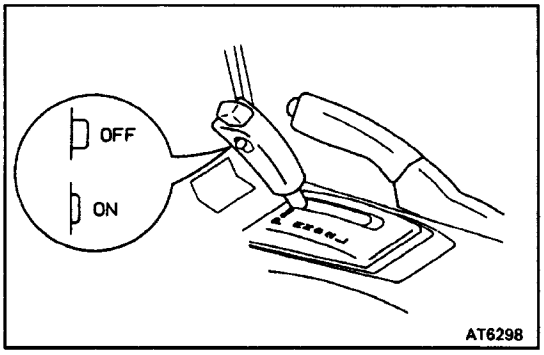

READ DIAGNOSTIC CODE

1. TURN IGNITION SWITCH AND O/D SWITCH TO ON

Do not start the engine.

HINT: Warning and diagnostic codes can be read only when the overdrive switch is ON. If OFF, the overdrive OFF light will light continuously and will not blink.

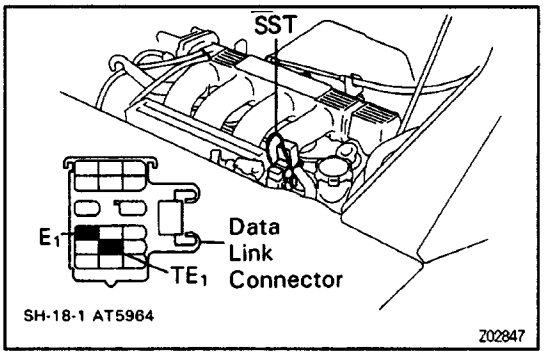

2. CONNECT TE, AND E1 TERMINALS OF DATA LINK CONNECTOR

Using SST, connect terminals TE, and E1 of the datalink connector.

SST 09843–18020

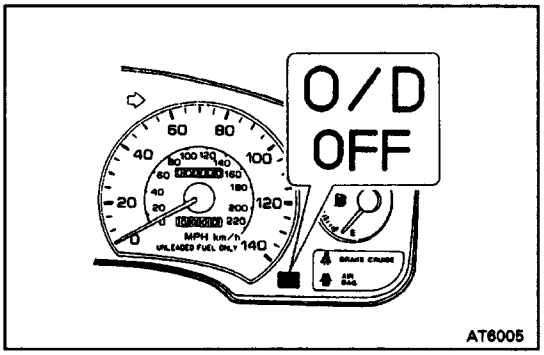

3. READ DIAGNOSTIC CODE

Read the diagnostic code as indicated by the number of times the O/D OFF light flashes.

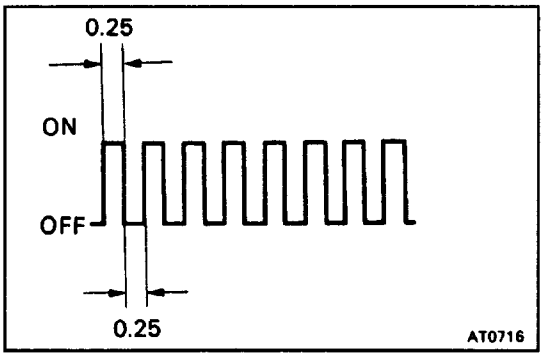

(Diagnostic Code Indication)

- If the system is operating normally, the light will flash 2 times par second.
- In the event of a malfunction, the light will flash 1 time par second. The number of blinks will equal the first number and, after 1.5 seconds pause, the second number of the two digit diagnostic code. If there are two or more codes, there will be a 2.5 seconds pause between each.

HINT: In the event of several trouble codes occurring simultaneously, indication will began from the smaller value and continue to the larger.

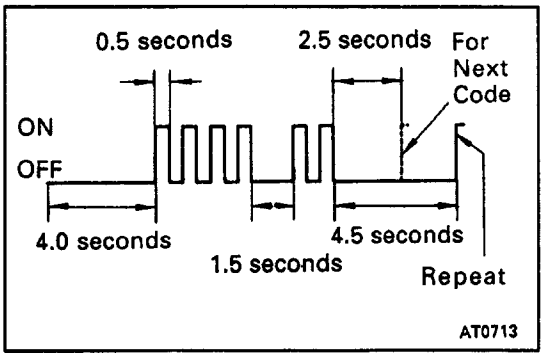

4. REMOVE SST

DIAGNOSTIC CODES

Code No.	Light Pattern	Diagnosis System
–		Normal
42		Defective No. 1 speed sensor (in combination meter)– severed wire harness or short circuit
61		Defective No. 2 speed sensor (in ATM)– severed wire harness or short circuit
62		Severed No. 1 solenoid or short circuit– severed wire harness or short circuit
63		Severed No.2 solenoid or short circuit– severed wire harness or short circuit
64		Severed lock–up solenoid or short circuit– severed wire harness or short circuit

AT2020

V00775

HINT: If codes 62, 63, or 64 appear, there is an electrical malfunction in the solenoid.
Causes due to mechanical failure, such as a stuck valve, will not appear.

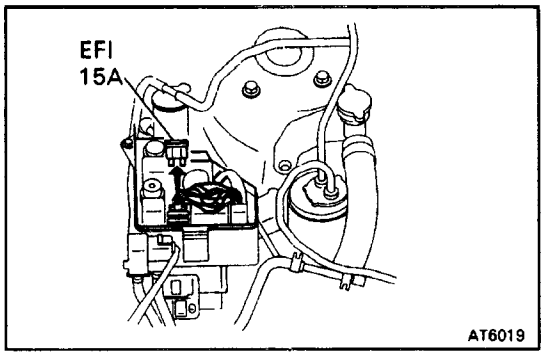

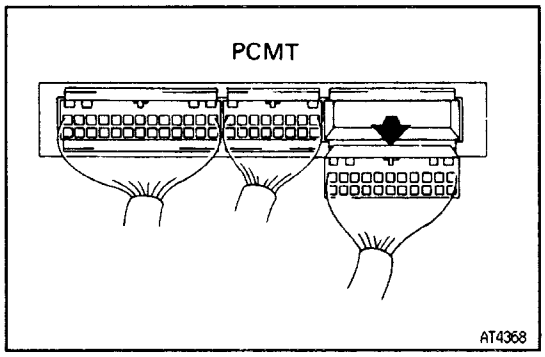

CANCEL OUT DIAGNOSTIC CODE

1. After repair of the trouble area, the diagnostic code retained in memory by the PCMT must be canceled by removing the EFI fuse (1 5A) for 10 seconds or more, depending on ambient temperature (the lower the temperature, the longer the fuse must be left out) with the ignition switch OFF.
   HINT:
   Cancellation can be also done by removing the battery negative (–) terminal, but in this case other memory systems will be also canceled out.
   The diagnostic code can be also canceled out by disconnecting the PCMT connector.
   If the diagnostic code is not canceled out, it will be retained by the PCMT and appear along with a new code in event of future trouble.
2. After cancellation, perform a road test to confirm that a “normal code” is now read on the O/D OFF light.

AX06T–01

TROUBLESHOOTING FLOW–CHART

HINT:

- If diagnostic code Nos.42, 61, 62 or 63 are output, the overdrive OFF indicator light will begin to blink immediately to warn the driver. However, an impact or shock may cause the blinking to stop; but the code will still be retained in the PCMT memory until canceled out.
- There is no warning for diagnostic code No.64.
- In the event of a simultaneous malfunction of both No.1 and No.2 speed sensors, no diagnostic code will appear and the fail–safe system will not function. However, when driving in the D range, the transmission will not up–shift from first gear, regardless of the vehicle speed.

Diagnostic code 42
(No. 1 vehicle speed pulse generator circuitry)

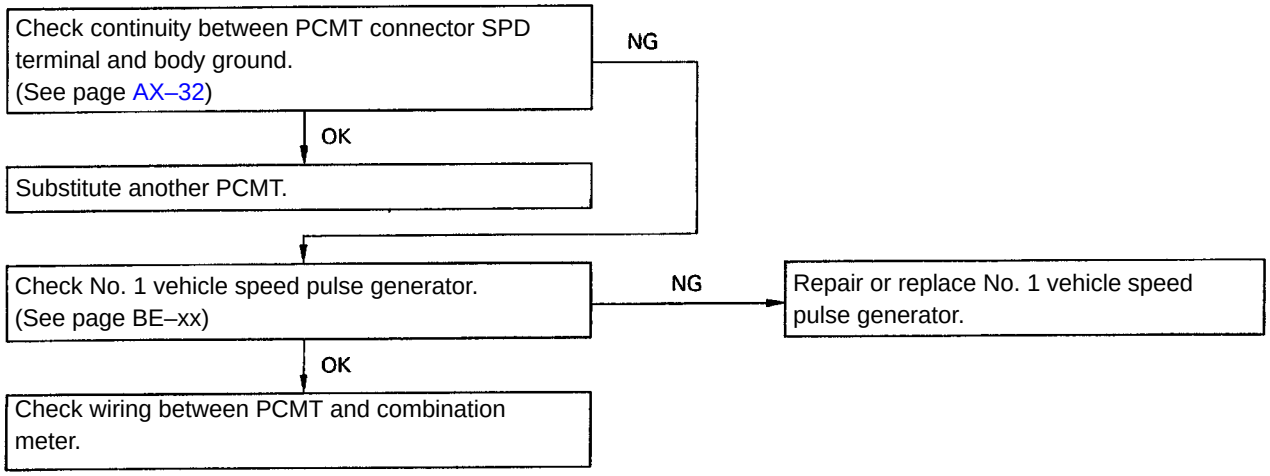

Diagnostic code 61
(No. 2 vehicle speed pulse generator circuitry)

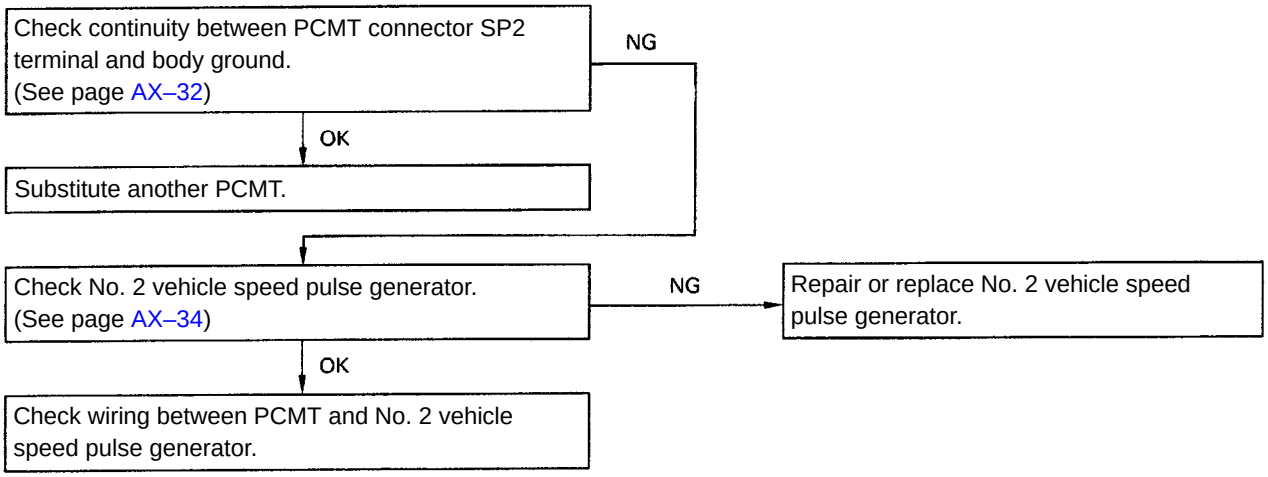

V01004

Diagnostic code 62 (No. 1 solenoid circuitry)

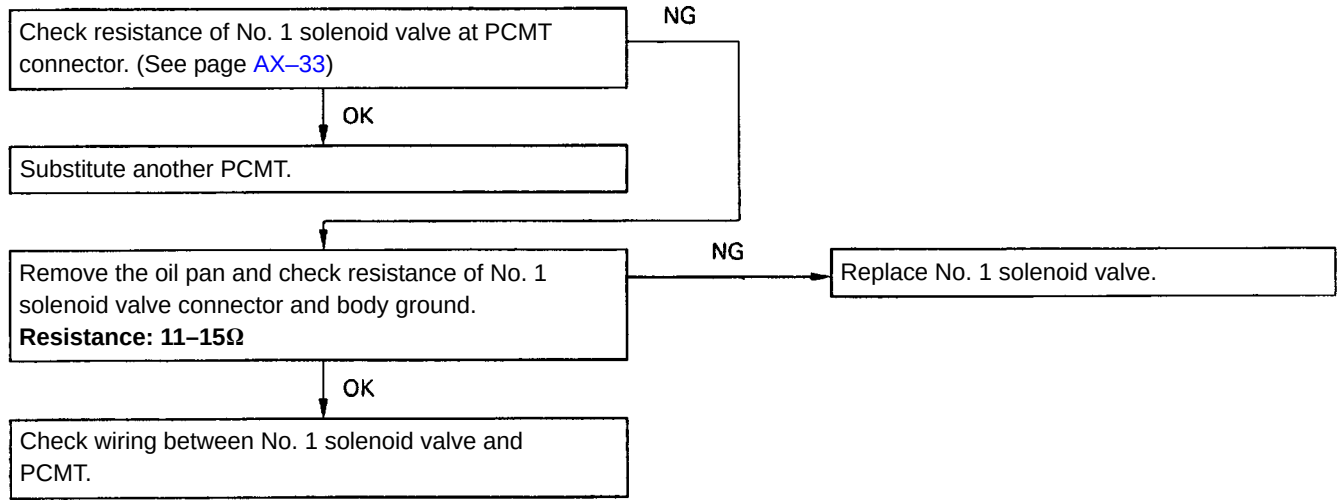

Diagnostic code 63 (No. 2 solenoid valve circuitry)

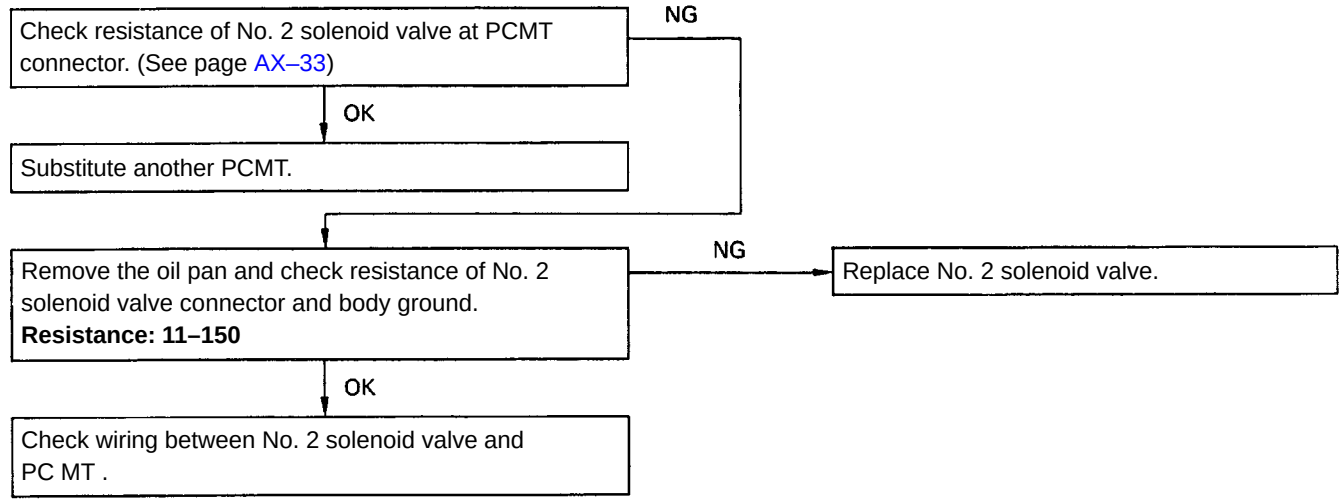

Diagnostic code 64
(Transaxle converter clutch switch valve circuitry)

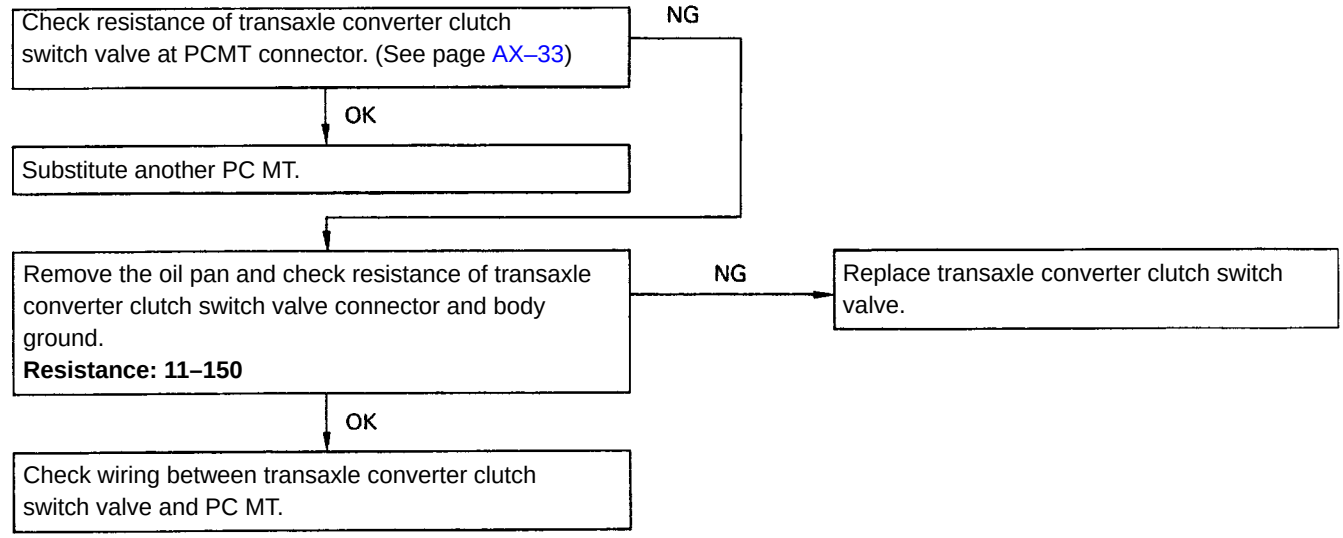

V01005

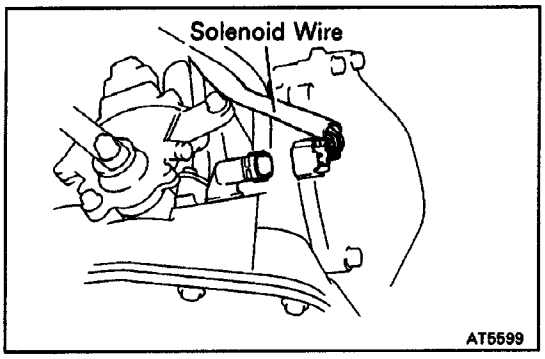

AX06U – 01

MANUAL SHIFTING TEST

HINT: With this test, it can be determined whether the trouble lies within the electrical circuit or is a me–chanical problem in the transaxle.

1. DISCONNECT SOLENOID WIRE

2. INSPECT MANUAL DRIVING OPERATION

Check that the shift and gear positions correspond with the table on next page.

HINT: If the L, 2 and D range gear positions are difficult to distinguish, perform the following road test.

- While driving, shift through the L, 2 and D ranges.
  Check that the gear change corresponds to the shift position.
- If any abnormality is found in the above test, the problem lies in transaxle

3. CONNECT SOLENOID WIRE

4. CANCEL OUT DIAGNOSTIC CODE

(See page AX–20**)**

REFERENCE: Possible gear positions in accordance with solenoid operating conditions.

Range	NORMAL			No. 1 SOLENOID MALFUNCTIONING			No. 2 SOLENOID MALFUNCTIONING			BOTH SOLENOIDS MALFUNCTIONING		
	Solenoid Valve		Gear Position	Solenoid Valve		Gear Position	Solenoid Valve		Gear Position	Solenoid Valve		Gear Position
	No. 1	No. 2		No. 1	No. 2		No. 1	No. 2		No. 1	No. 2	
D range	**ON**	OFF	**1st**	**X**	**ON**	3rd	**ON**	**X**	**1st**	**X**	**X**	O/D
	ON	**ON**	2nd	**X**	**ON**	3rd	OFF	**X**	O/D	**X**	**X**	O/D
	OFF	**ON**	3rd	**X**	**ON**	3rd	OFF	**X**	O/D	**X**	**X**	O/D
	OFF	OFF	O/D	**X**	OFF	O/D	OFF	**X**	O/D	**X**	**X**	O/D
2 range	**ON**	OFF	**1st**	**X**	**ON**	3rd	**ON**	**X**	**1st**	**X**	**X**	3rd
	ON	**ON**	2nd	**X**	**ON**	3rd	OFF	**X**	3rd	**X**	**X**	3rd
	OFF	**ON**	3rd	**X**	**ON**	3rd	OFF	**X**	3rd	**X**	**X**	3rd
L range	**ON**	OFF	**1st**	**X**	OFF	**1st**	**ON**	**X**	**1st**	**X**	**X**	**1st**
	ON	**ON**	2nd	**X**	**ON**	2nd	**ON**	**X**	**1st**	**X**	**X**	**1st**

X: Malfunctions

V00957

AX08V–01

ELECTRONIC CONTROL CIRCUIT

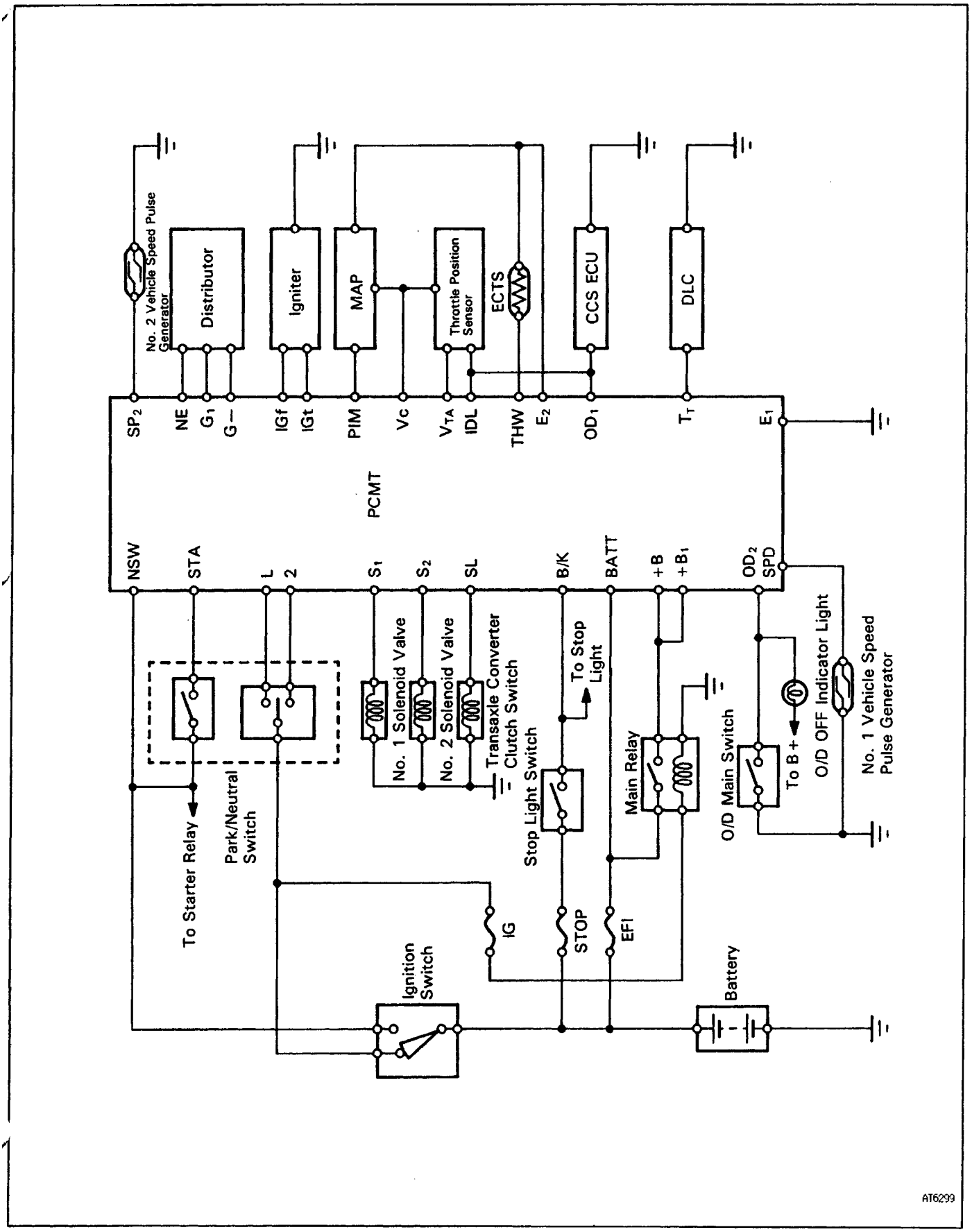

ELECTRONIC CONTROL COMPONENTS

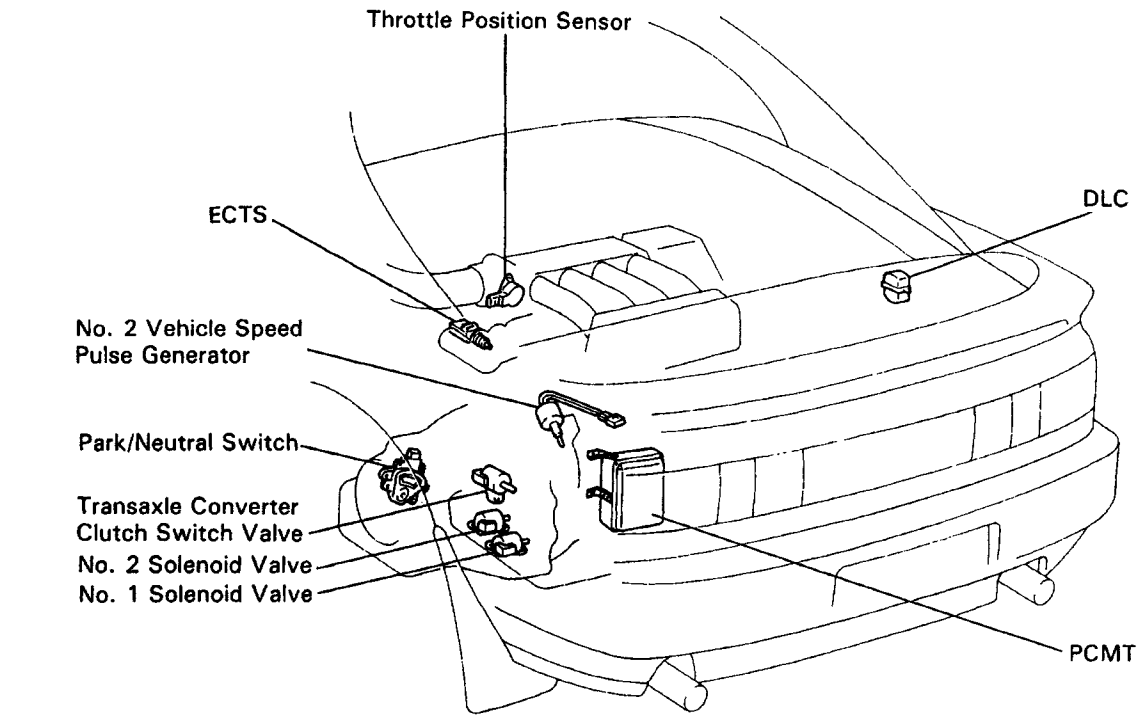

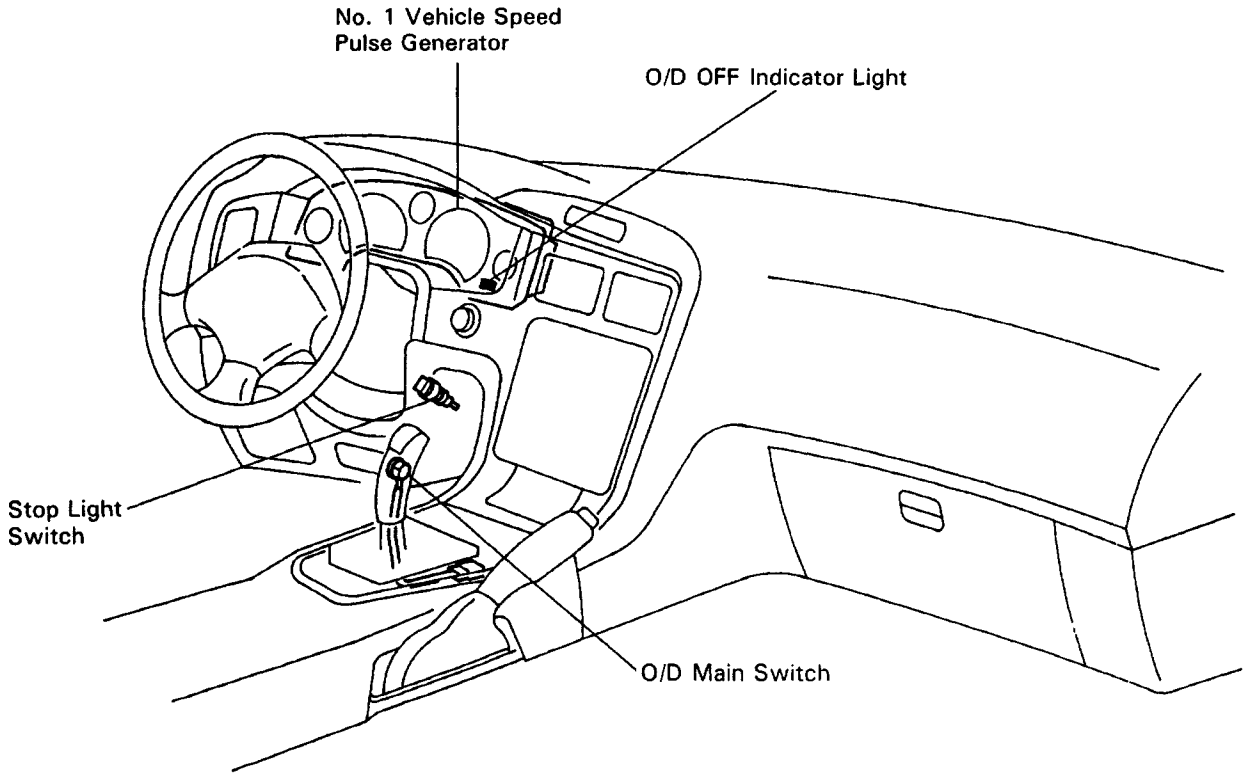

AT6013
AT6295

Z01504

TROUBLESHOOTING FLOW–CHART

Trouble No. 1 **No shifting**

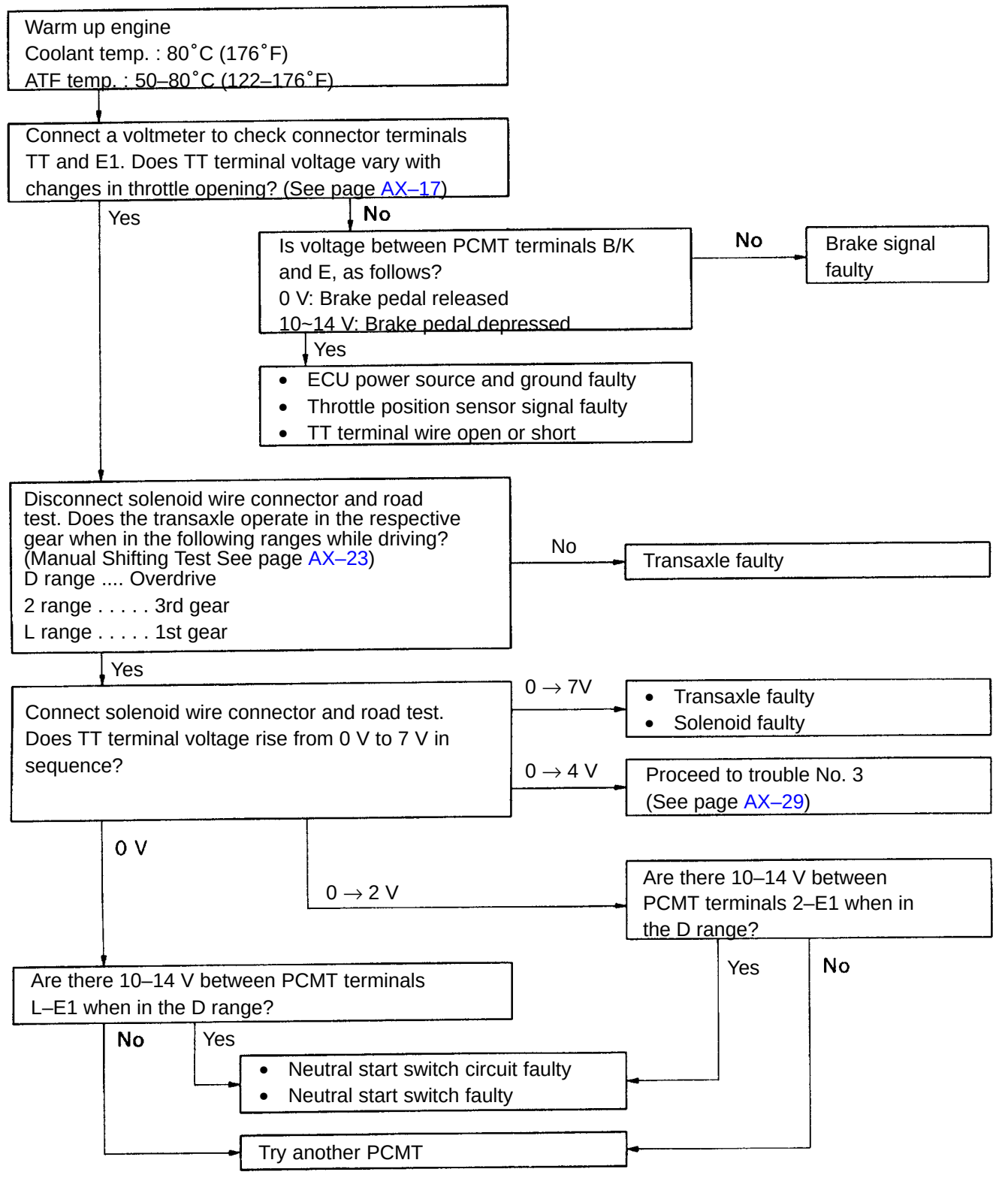

V00933

Trouble No. 2 Shift point too high or too low

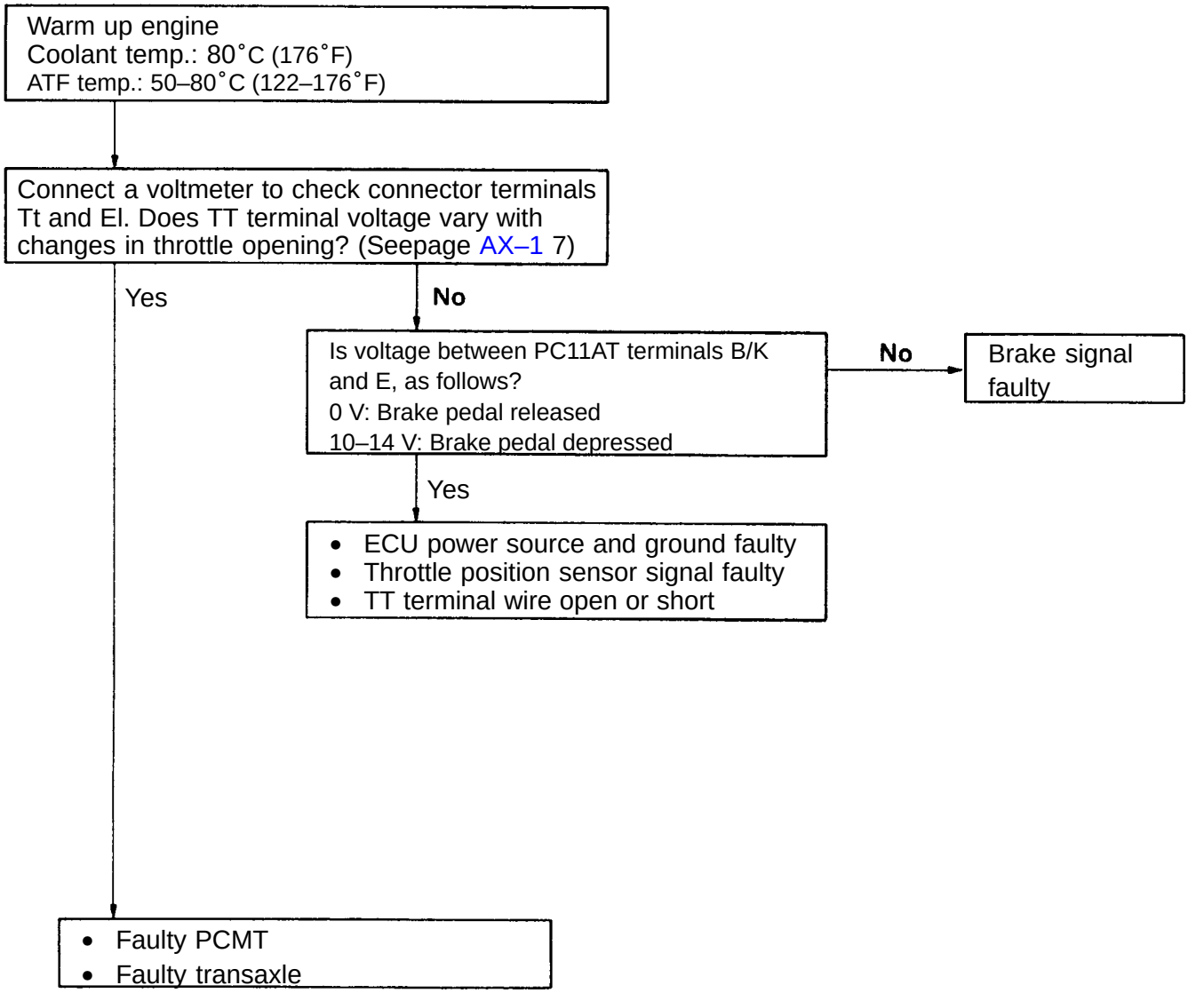

Trouble No. 3 **No up–shift to overdrive (After warm–up)**

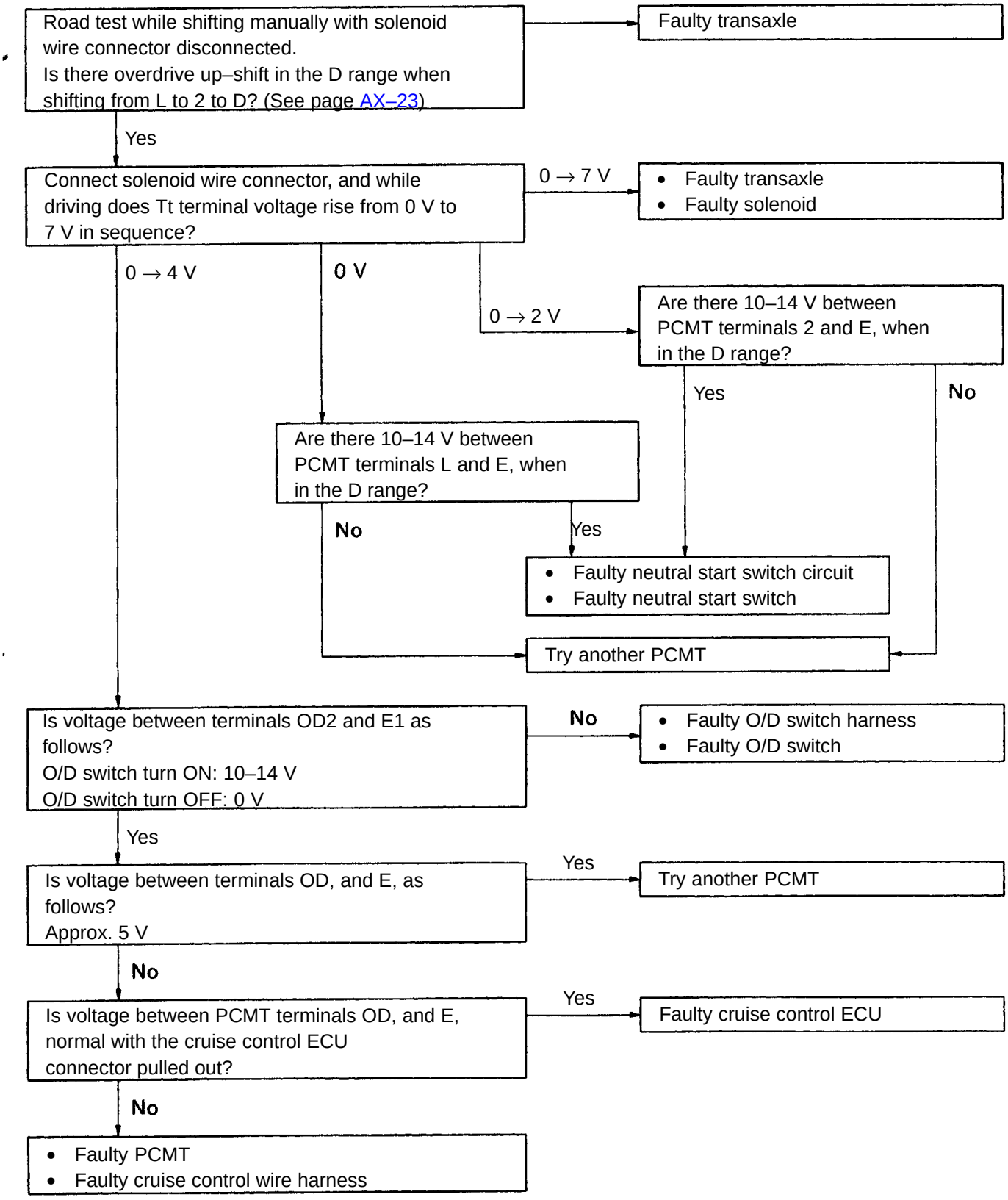

V00990

Trouble No. 4 No lock–up (After warm–up)

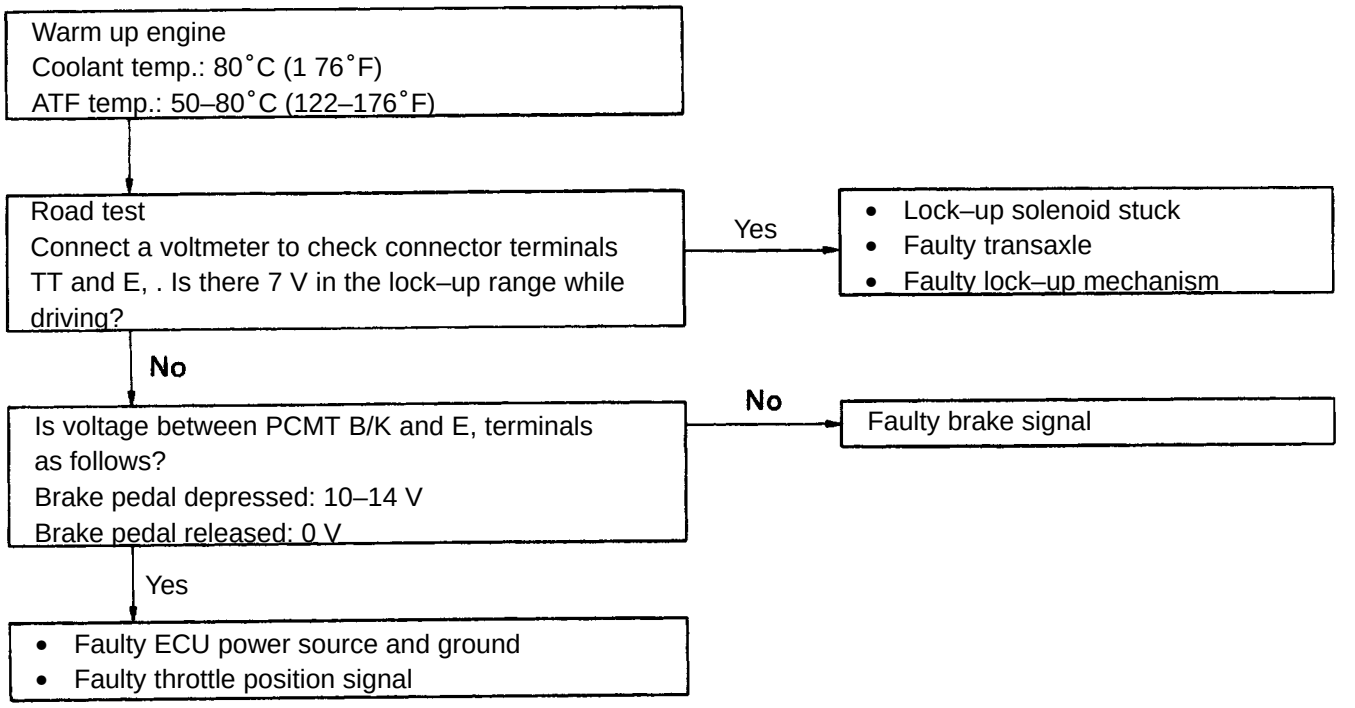

V00991

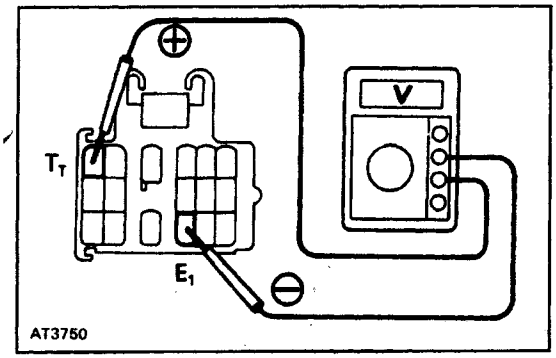

AX06W–01

T_T TERMINAL VOLTAGE INSPECTION

1. INSPECT THROTTLE POSITION SENSOR SIGNAL

(a) Turn the ignition switch to ON. Do not start the engine.

(b) Connect a voltmeter to check connector terminals TT and E1.

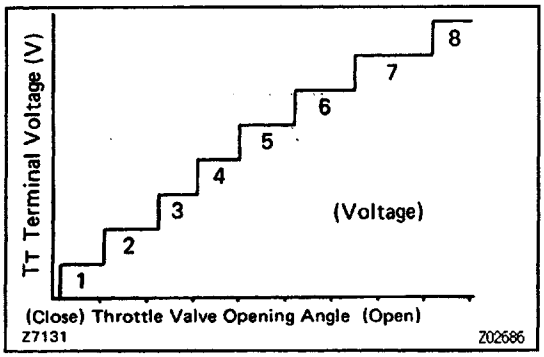

(c) While slowly depressing the accelerator pedal, check that TT terminal voltage rises in sequence.
If the voltage does not change in proportion to the throttle opening angle, there is a malfunction in the throttle position sensor or circuit.

2. INSPECT BRAKE SIGNAL

(a) Depress the accelerator pedal until the TT terminal indicates 8 V.

(b) Depress the brake pedal and check the voltage reading from the TT terminal.
Brake pedal depressed ..... 0 V
Brake pedal released ..... 8 V
If not as indicated, there is a malfunction in either the stop light switch or circuit.

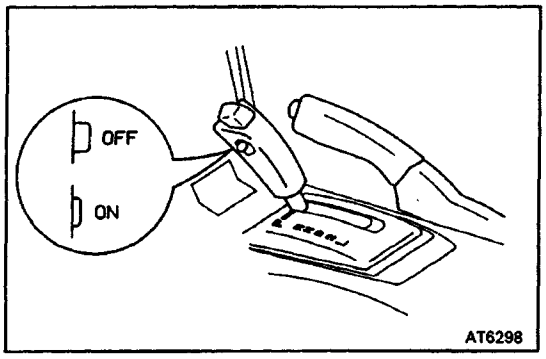

3. INSPECT EACH UP–SHIFT POSITION

(a) Warm up the engine.
Coolant temperature:
80˚C (176˚F)

(b) Turn the O/D switch to “ON”.

(c) Place the pattern select switch in “Normal” and the shift lever into the D range.

(d) During a road test (about 10 km/h or 6 mph) check that voltage at the TT terminal is as indicated below for each up–shift position.
If the voltage rises from 0 V to 7 V in the sequence shown, the control system is okay.
The chart on the left shows the voltmeter reading and corresponding gears.
HINT: Determine the gear position by alight shock or change in engine rpm when shifting.

TT Terminal (V)	Gear position
	1st 2nd 3rd O/D O/D Lock u p

V01BNO

V00956

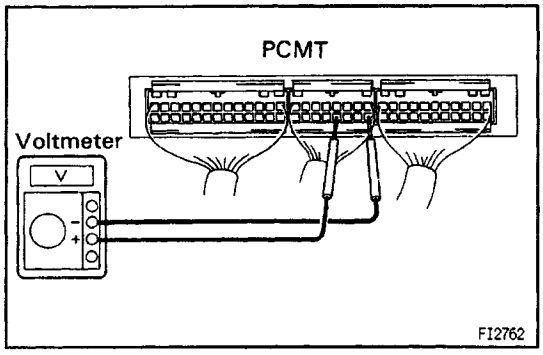

ELECTRONIC CONTROL COMPONENTS INSPECTION

1. INSPECT VOLTAGE OF PCMT

(a) Turn on the ignition switch.

(b) Measure the voltage at each terminal.

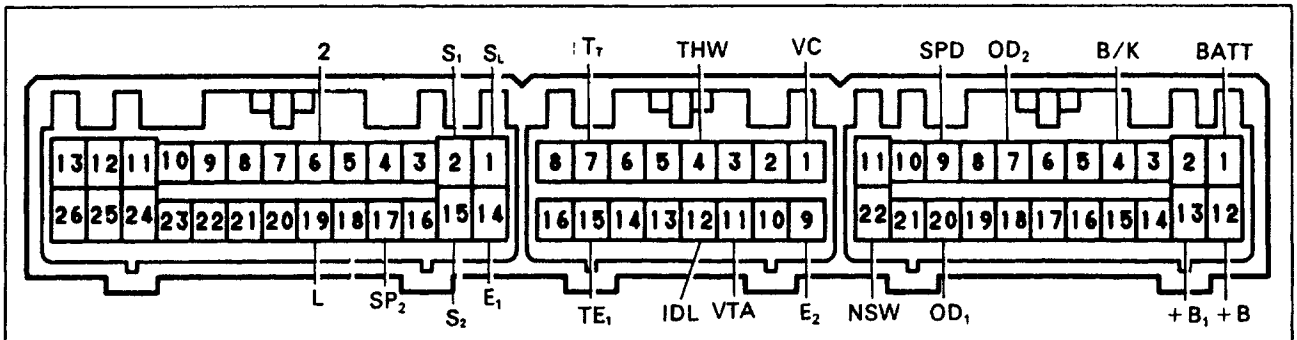

Terminal	Measuring condition		Voltage (V)
$S_1 - E_1$	Ignition switch turned ON		0 – 1.5
S_2, $S_L - E_1$	Ignition switch turned ON		0 – 1.5
STP – E_1	Brake pedal is depressed		7.5 – 14
	Brake pedal is released		0 – 1.5
THW – E_2	Coolant temp. 80°C (176°F)		0.2 – 1.0
IDL – E_2	Throttle valve fully closed		0 – 3
	Throttle valve open		9 – 14
VTA – E_2	Throttle valve fully closed		0.3 – 0.8
	Throttle valve open		3.2 – 4.9
VC – E_2	——		4.5 – 5.5
$OD_1 - E_1$	Ignition switch ON		9 – 14
$OD_2 - E_1$	O/D main switch turned ON	(O/D switch ON)	9 – 14
	O/D main switch turned OFF	(O/D switch OFF)	0 – 3
SPD – E_1	Cruise control main switch OFF	Standing still	0 – 2
		Vehicle moving	0.2 – 2 ↔ 4.5 – 5.5
$SP_2 - E_1$	Standing still		0 – 2
	Vehicle moving		0.2 – 2 ↔ 4.5 – 5.5

V00955

Terminal	Measuring condition	Voltage (v)
NSW – E_1	N range	0 – 3
	Except N range	9 – 14
2 – E_1	2 range	7.5 – 14
	Except 2 range	0 – 2
L – E_1	L range	7.5 – 14
	Except L range	0 – 2
+B (+B_1) – E_1	–	9 – 14
BATT – E_1	–	9 – 14

V00810

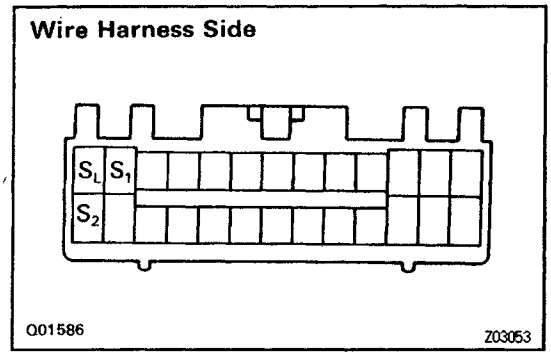

2. INSPECT SOLENOID

(a) Disconnect the connector from PCMT.

(b) Measure the resistance between S_1, S_2, $S_L$and ground.

Resistance:

11–150 Ω

(c) Apply battery voltage to each terminal. Check that an operation noise can be heard from the solenoid.

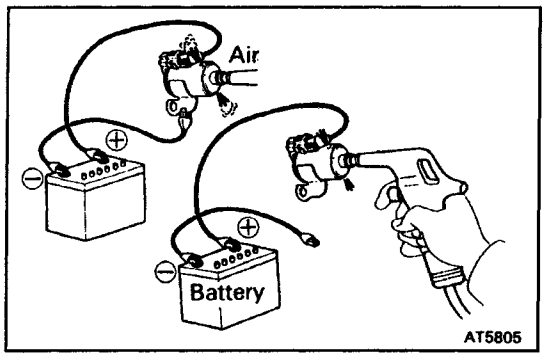

3. CHECK SOLENOID SEALS

If there is foreign material in the solenoid valve, there will be no fluid control even with solenoid operation. Check No.1, No.2 solenoid and Transaxle converter clutch switch.

- Apply 490 kPa (5 kg/cm^2, 71 psi) of compressed air, check that the solenoid valves do not leak the air.
- When supply battery voltage to the solenoids, check that the solenoid valves open.

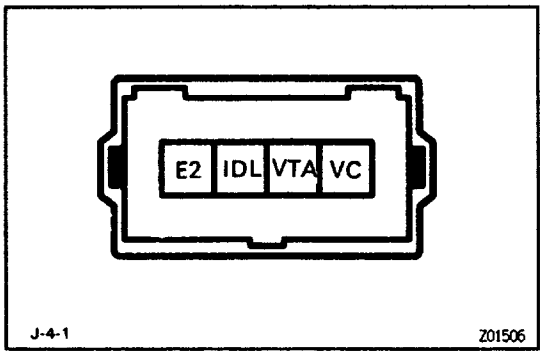

4. INSPECT THROTTLE POSITION SENSOR

Using an ohmmeter, check the resistance between terminals.

Terminal	Throttle valve condition	Resistance (kΩ)
IDL–E_2	Fully closed	0–0.1
	Open	Infinity
VC–E_2	–	3–7
VTA–E_2	Fully closed	0.2–0.8
	Fully open	3.3–10

V00812

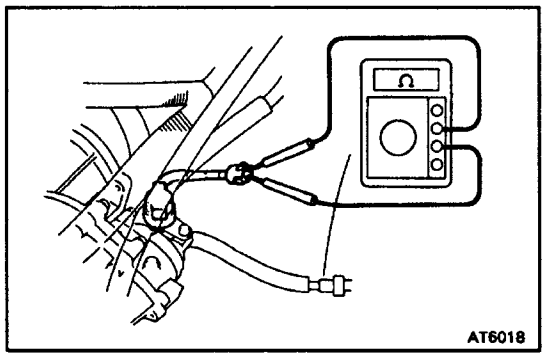

5. INSPECT NO.2 VEHICLE SPEED PULSE GENERATOR

(a) Jack up the front wheel on one side.
(b) Connect an ohmmeter between the terminals.
(c) Spin the wheel and check that the meter needle deflects from 0Ω to ∞ Ω.

6. INSPECT NO.1 VEHICLE SPEED PULSE GENERATOR
(See page BE–73**)**

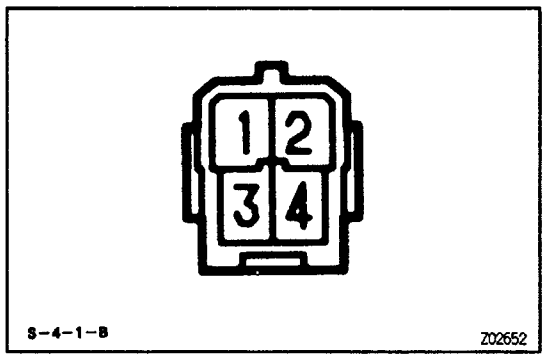

7. INSPECT O/D SWITCH

Using an ohmmeter, check the continuity of the terminals for each switch position.

SW position \ Terminal	1	3
ON		
OFF	O	O

V00814

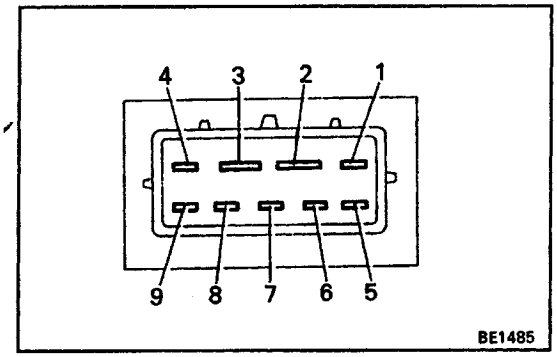

8. INSPECT PARK/NEUTRAL SWITCH

Check that there is continuity between terminals.

Range \ Terminal	2	3	6	1	5	7	8	9	4
P	○	○	○	○					
R			○		○				
N	○	○	○			○			
D			○				○		
2			○					○	
L			○						○

V00954

9. INSPECT ENGINE COOLANT TEMPERATURE SENSOR

(See page EG–305)

AX06Y–01

STALL TEST

The object of this test is to check the overall performance of the transaxle and engine by measuring the stall speeds in the D and R ranges.

NOTICE:

- Perform the test at normal operation fluid temperature (50–80˚C or 122–176˚F).
- Do not continuously run this test longer than 5 seconds.
- To ensure safety, conduct this test in a wide, clear, level area which provides good traction.
- The stall test should always be carried out in pairs. One should observe the condition of wheels or wheel stoppers outside the vehicle while the other is performing the test.

MEASURE STALL SPEED

(a) Chock the front and rear wheels.
(b) Connect a tachometer to the engine.
(c) Fully apply the parking brake.
(d) Keep your left foot pressed firmly on the brake pedal.
(e) Start the engine.
(f) Shift into the D range. Step all the way down on the accelerator pedal with your right foot.
Quickly read the stall speed at this time.
Stall speed:
2,650 ± 150 rpm
(g) Perform the same test in R range.

EVALUATION

(a) If the stall speed is the same for both ranges without the rear wheels rotating but lower than specified value:

- Engine output may be insufficient
- Stator one–way clutch is not operating properly

(b) If the stall speed in D range is higher than specified:

- Line pressure too low
- Forward clutch slipping
- No.2 one–way clutch not operating properly
- Underdrive one–way clutch not operating properly

(c) If the stall speed in R range is higher than specified:

- Line pressure too low
- Direct clutch slipping
- First and reverse brake slipping
- Underdrive brake slipping

(d) If the stall speed in both R and D ranges are higher than specified:

- Line pressure too low
- Improper fluid level
- Underdrive brake slipping

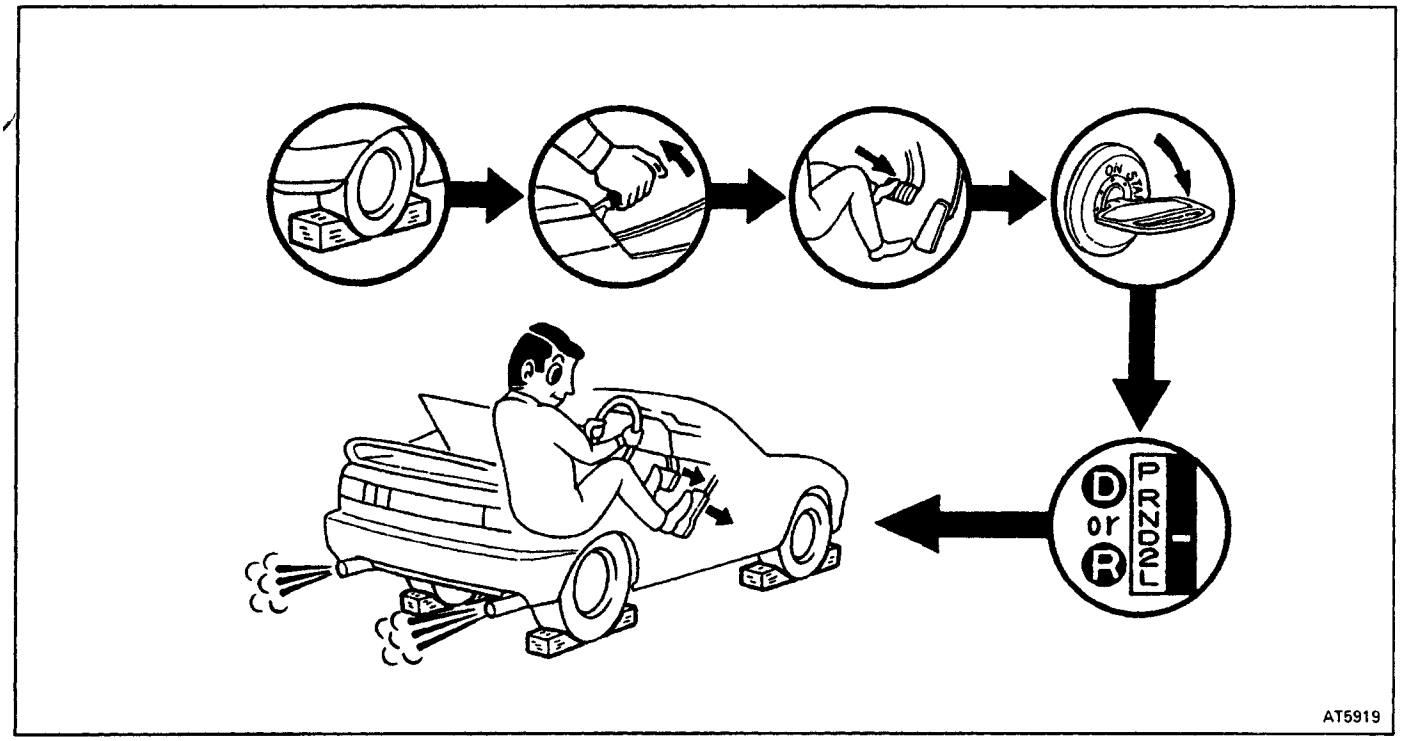
D
or
R
P R N 2 L
AT5919

AX06Z–01

TIME LAG TEST

When the shift lever is shifted while the engine is idling, there will be a certain time lapse or lag before the shock can be felt. This is used for checking the condition of the underdrive clutch, forward clutch, direct clutch and first and reverse brake.

NOTICE:

- Perform the test at normal operating fluid temperature (50–80˚C or 122–176˚F).
- Be sure to allow one minute interval between tests.
- Make three measurements and take the average value.

MEASURE TIME LAG

(a) Fully apply the parking brake.

(b) Start the engine and check the idle speed.

Idle speed (N range):

700 ± 150 rpm

(c) Shift the shift lever from N to D position. Using a stop watch, measure the time it takes from shifting the lever until the shock is felt.

Time lag:

Less than 1.2 seconds

(d) In the same manner, measure the time lag for N to R.

Time lag:

Less than 1.5 seconds

EVALUATION

(a) If N→D time lag is longer than specified:

- Line pressure too low
- Forward clutch worn
- No.2 and underdrive one–way clutch not operating properly

(b) If N→R time lag is longer than specified:

- Line pressure too low
- Direct clutch worn
- First and reverse brake worn
- Underdrive brake worn

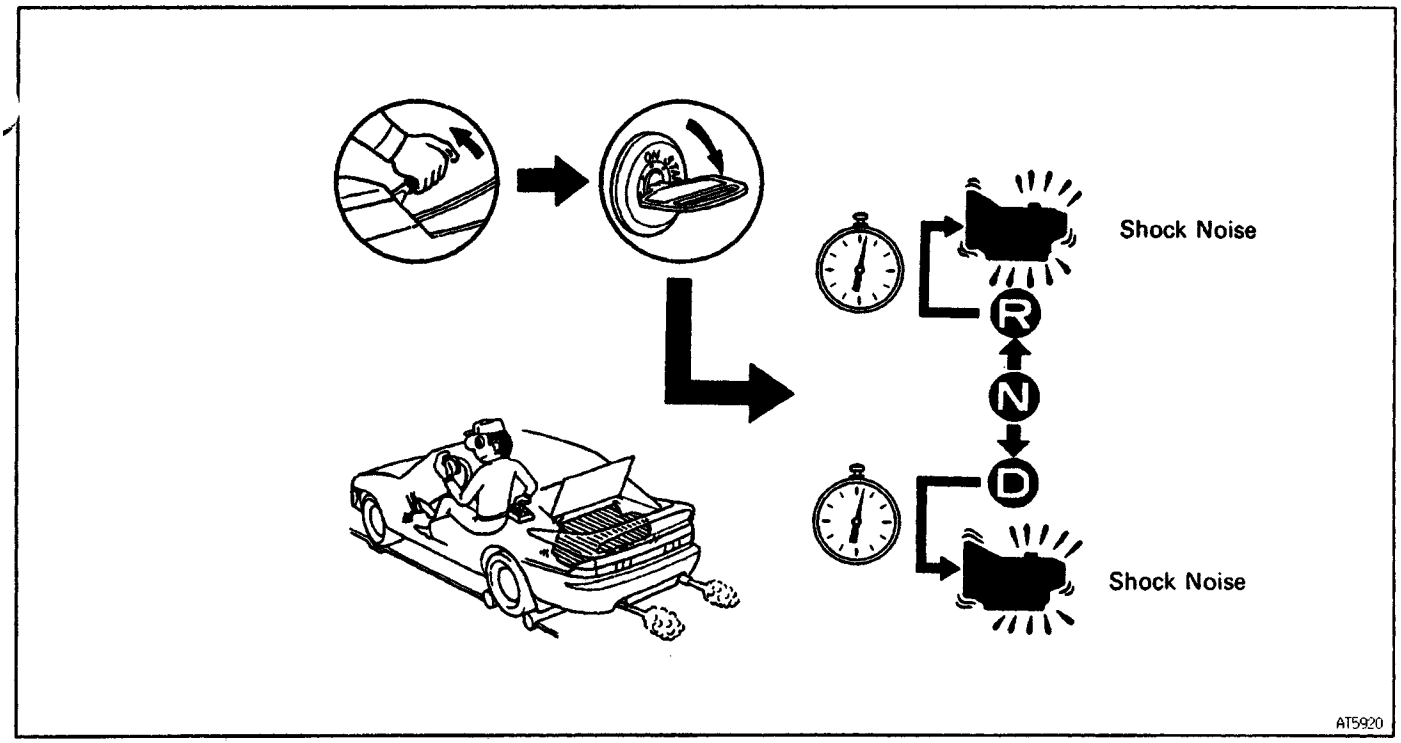
Shock Noise
R
N
D
Shock Noise
AT5920

AX070–01

HYDRAULIC TEST

PREPARATION

(a) Warm up the transaxle fluid.

(b) Remove the transaxle case test plug and connect the hydraulic pressure gauge.

SST 09992–00094 (Oil pressure gauge)

CAUTION:

- **Perform the test at normal operating fluid temperature (50–$o˚C or 122–176˚F).**
- **The line pressure test should always be carried out in pairs. One should observe the conditions of wheels or wheel stoppers outside the vehicle while the other is performing the test.**

MEASURE LINE PRESSURE

(a) Fully apply the parking brake and chock the front wheels.

(b) Start the engine and check idling rpm.

(c) Step down strongly on the brake pedal with your left foot and shift into D range.

(d) Measure the line pressure when the engine is idling.

(e) Press the accelerator pedal all the way down. Quickly read the highest line pressure when engine speed reaches stall speed.

(f) In the same manner, perform the test in R range.

Type	Line pressure kPa (kg/cm2, psi)			
	D range		R range	
	Idling	Stall	Idling	Stall
A241 E	373 – 422 (3.8 – 4.3, 54 – 61)	716 – 863 (7.3 – 8.8, 104 – 125)	637 – 794 (6.5 – 8.1, 92 – 115)	1,334 – 1,579 (13.6 – 16.1, 193 – 229)

V00953

If the measured pressures are not up to specified value, recheck the throttle cable adjustment and perform a retest.

EVALUATION

(a) If the measured values at all ranges are higher than specified:

- Throttle cable out of adjustment
- Throttle valve defective
- Regulator valve defective

(b) If the measured values at all ranges are lower than specified:

- Throttle cable out of adjustment
- Throttle valve defective
- Regulator valve defective
- Oil pump defective
- Underdrive one–way clutch not operating properly

(c) If pressure is low in the D range only:

- D range circuit fluid leakage
- Forward clutch defective
- Underdrive one–way clutch not operating properly

(d) If pressure is low in the R range only:

- R range circuit fluid leakage

- **Direct clutch defective**
- **First and reverse brake defective**
- **Underdrive one–way clutch not operating properly**

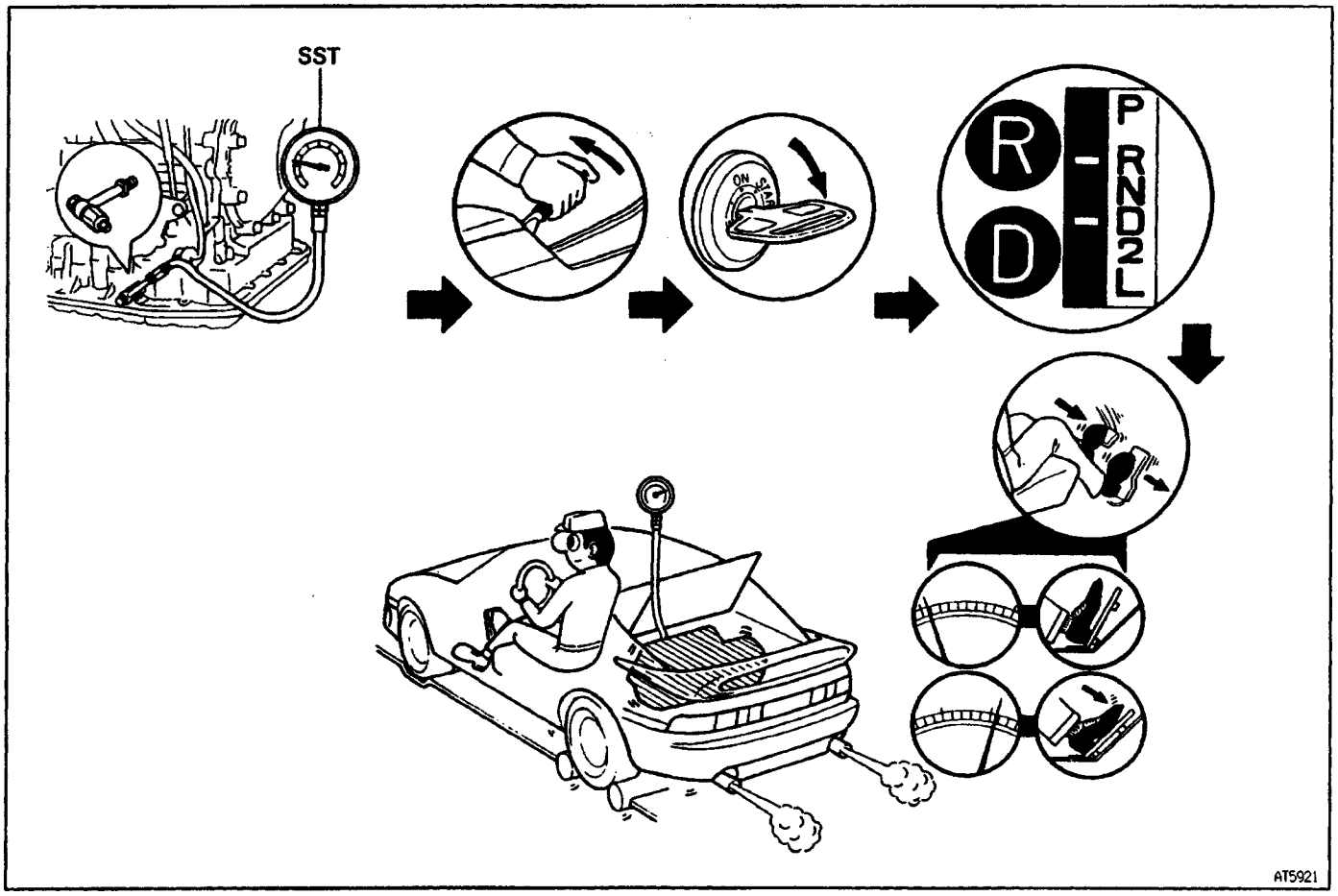

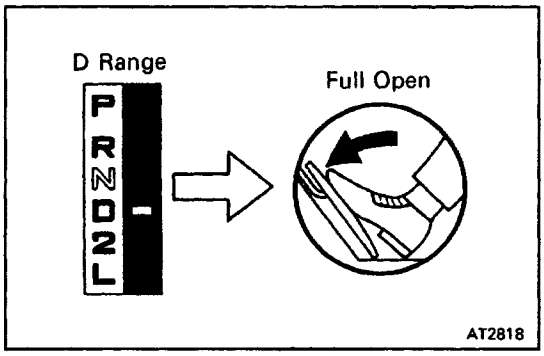

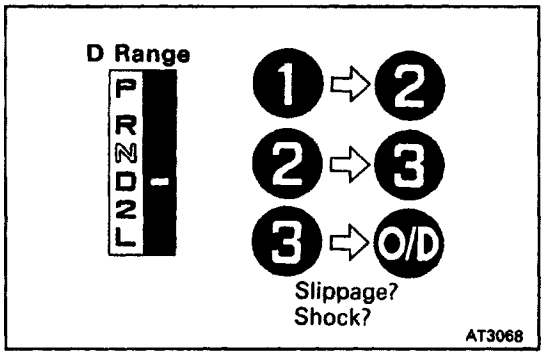

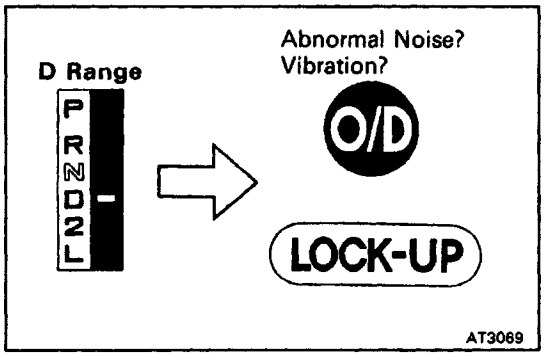

ROAD TEST

AX071–01

NOTICE: Perform the test at normal operating fluid temperature (50–80˚C or 122–176˚F).

1. D RANGE TEST IN NORM AND PWR PATTERN RANGES

Shift into the D range and hold the accelerator pedal constant at the full throttle valve opening position. Check the following:

(a) 1–2, 2–3 and 3–O/D up–shifts should take place, and shift points should conform to those shown in the automatic shift schedule. (See page AX–45).

HINT:

- There is no O/D up–shift and lock–up when the coolant temp. is below 53˚C (127˚F).
- When the coolant temp. is below 60˚C (140˚F), the shift point is lower than specified in the automatic shift schedule.

EVALUATION

(1) If there is no 1→2 up–shift:

- No.2 solenoid is stuck
- 1–2 shift valve is stuck

(2) If there is no 2→3 up–shift:

- No. 1 solenoid is stuck
- 2–3 shift valve is stuck

(3) If there is no 3→O/D up–shift:

- 3–4 shift valve is stuck

(4) If the shift point is defective:

- Throttle valve, 1–2 shift valve, 2–3 shift valve, 3–4 shift valve etc., are defective

(5) If the lock–up is defective:

- Lock–up solenoid is stuck
- Lock–up relay valve is stuck

(b) In the same manner, check the shock and slip at the 1→2, 2→3 and 3→O/D up–shifts.

EVALUATION

If the shock is excessive:

- Line pressure is too high
- Accumulator is defective
- Check ball is defective

(c) Run at the D range lock–up or O/D gear and check for abnormal noise and vibraton.

HINT: The check for the cause of abnormal noise and vibration must be made with extreme care as it could also be due to loss of balance in the drive shaft, tire torque converter, etc.

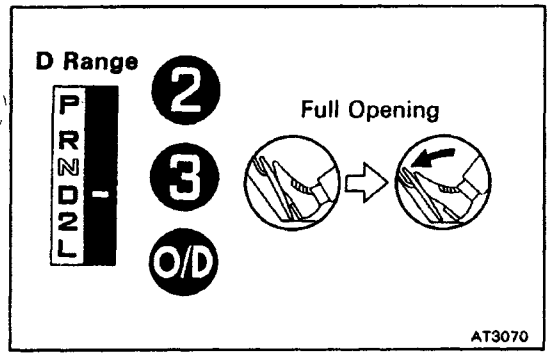

(d) While running in the D range, 2nd, 3rd and O/D gears, check to see that the possible kick–down vehicle speed limits for 2–1, 3–2 and O/D–3 kick–downs conform to those indicated on the automatic shift schedule. (See page AX–45)

(e) Check for abnormal shock and slip at kick–down.

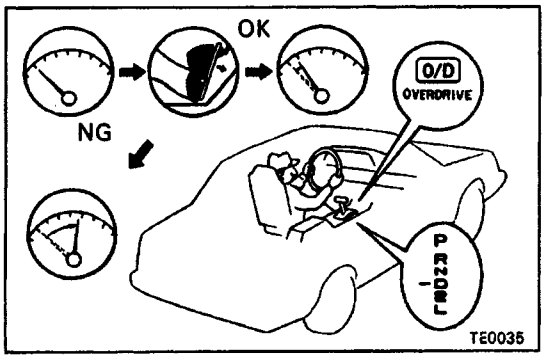

(f) Check for the lock–up mechanism.

(1) Drive in D range, O/D gear, at a steady speed (lock–up ON) of about 64–71 km/h (40–44 mph).

(2) Lightly depress the accelerator pedal and check that the engine rpm does not change abruptly.

If there is a big jump in engine rpm, there is no lock–up.

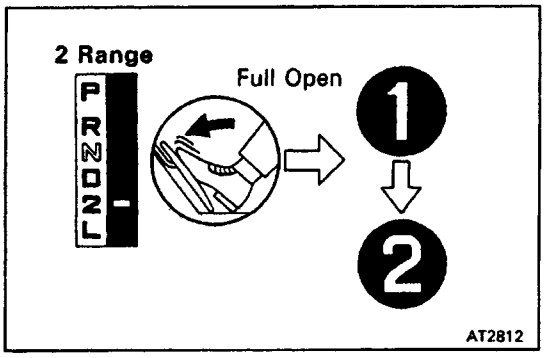

2. 2 RANGE TEST

Shift into the 2 range and, while driving with the accelerator pedal held constantly at the full throttle' valve opening position, push in one of the pattern selectors and check on the following points.

(a) Check to see that the 1–2 up–shift takes place and that the shift point conforms to it shown on the automatic shift schedule. (See page AX–45)

HINT:

- To prevent overrun, the transmission shifts up into 3rd gear at around 109 km/h (68 mph).
- In range 2, there will be no lock–up to 2nd gear.

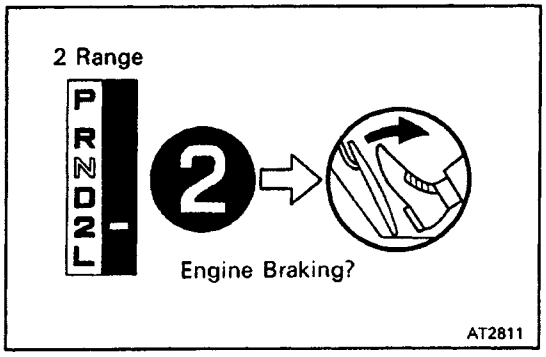

(b) While running in the 2 range and 2nd gear, release the accelerator pedal and check the engine braking effect.

EVALUATION

If there is no engine braking effect:

- Second coast brake is defective

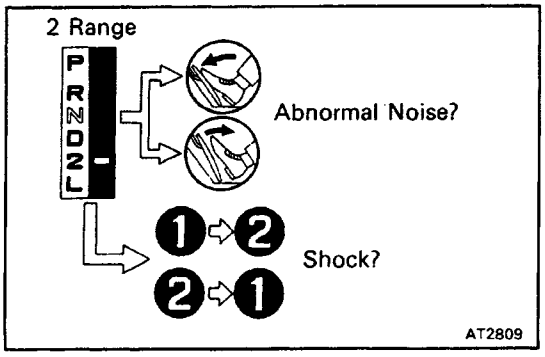

(c) Check for abnormal noise at acceleration and deceleration, and for shock at up–shift and down–shift.

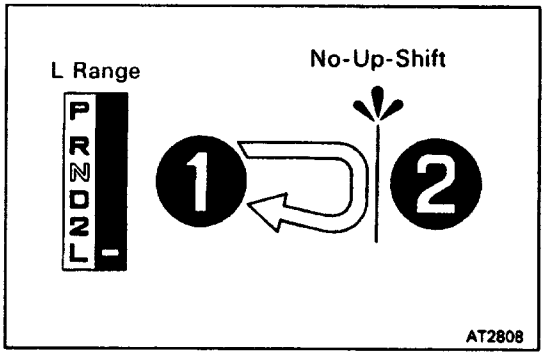

3. L RANGE TEST

(a) While running in the L range, check to see that there is no up–shift to 2nd gear.
HINT: To prevent overrun, the transmission up–shifts into 2nd gear at around 59 km/h (37 mph).

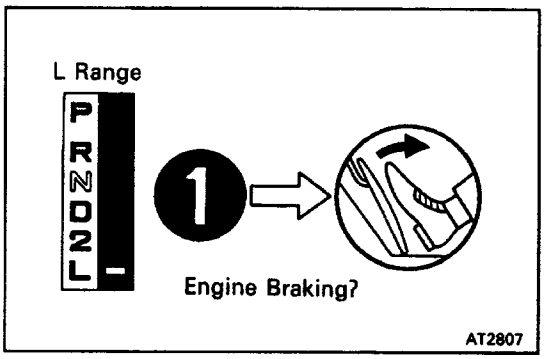

(b) While running in the L range, release the accelerator pedal and check the engine braking effect.
EVALUATION
If there is no engine braking effect:

- First and reverse brake is defective

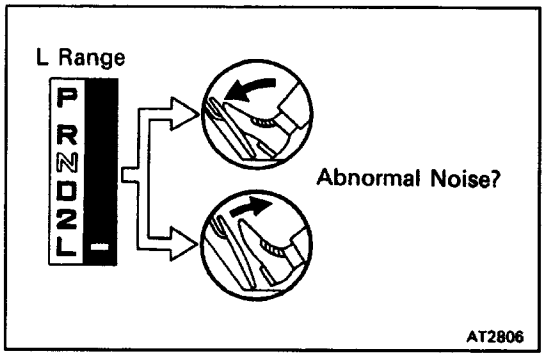

(c) Check for abnormal noise during acceleration and deceleration.

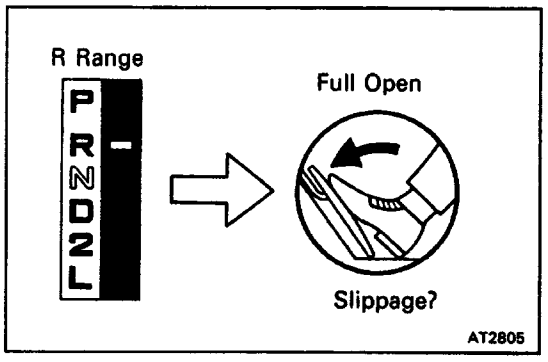

4. R RANGE TEST

Shift into R range and, while starting at full throttle, check for slipping.

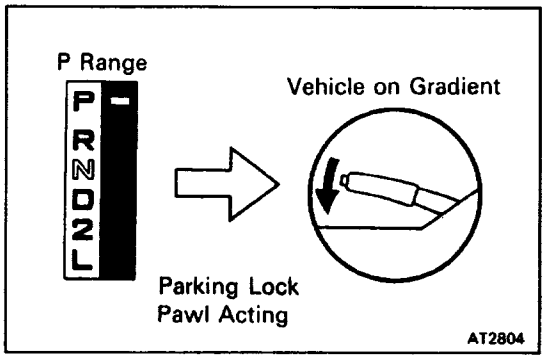

5. P RANGE TEST

Stop the vehicle on a gradient (more than 5°) and after shifting into the P range, release the parking brake. Then check to see that the parking lock pawl holds the vehicle in place.

AX072–01

AUTOMATIC SHIFT SCHEDULE

	Throttle valve fully open [ ] Fully closed km/h (mph)							
	1→2	2→3	3→O/D	[3→O/D]	[O/D→31	O/D→3	3→2	2→1
D range	53 – 59 (33 – 37)	98 – 109 (61 – 68)	131 – 143 (81 – 89)	44 – 50 (27 – 31)	18 – 23 (11 – 14)	125 – 137 (78 – 85)	93 – 104 (58 – 65)	42 – 48 (26 – 30)
2 range	53 – 59 (33 – 37)	–	–	–	–	–	–	42 – 49 (26 – 30)
L range	–	–	–	–	–	–	–	47 – 53 (29 – 33)

	Throttle valve opening 5% km/h(mph)	
	Lock–up ON	Lock–OFF OFF
	O/D	O/D
D range	64 — 71 (40 – 44)	59 — 65 (37 – 40)

V01060

HINT:

(1) In the 2 and L ranges, all stages lock–up is OFF.

(2) In the following cases, the lock–up will be released regardless of the lock–up pattern.

- When the throttle is completely closed.
- When the brake switch is ON.

(3) Shift up to O/D will not occur when the engine coolant temp. is below 53˚C (127˚ F).

AX073–01

TROUBLE SHOOTING MATRIX CHART

You will find the troubles easier using the table will shown below. In this table, each number shows the priority of cause in troubles. Check each part in order, if necessary, replace these parts.

See Page / Parts Name / Trouble		AX–25	AX–66	*	*	*	*	*	*	*	*	*	*	*	*	*	*	*	*	*	*	*	*	*	*	*	*
		Electrical control system check	Torque converter	Parking lock pawl	Manual valve	1–2 shift valve	2–3 shift valve	Forward clutch (Cl)	Direct clutch (C2)	No. 2 one–way clutch (F2)	Front planetary gear	Rear planetary gear	1st and reverse bake (83)	U/0 one–way clutch (F3)	U/D clutch (C3)	U/D planetary gear	Second brake (B2)	2nd coast brake (B,)	U/D brake (Be)	No. 1 one–way clutch (F,)	3–4 shift valve	Accumulator control Valve	C, accumulator	Low coast modulator valve	B2 accumulator	2nd coast modulator valve	Throttle modulator valve
Does not move in any forward range								1	5	2			3				4	4									
Does not move in reverse range						3	4		5		2	2	7		6			1									
Does not move in any forward range or reverse range			7	1	2						5	5		3	3	6			4								
No–up shift	1st → 2nd	1				2											3			4							
	2nd →3rd	1					2		3																		
	3rd →O/D	1																	2		3						
No–down shift	O/D →3rd	1																			2						
	3rd → 2nd	1					2																				
	2nd →1st	1				2												3									
Shift point too high or too low		1																									
Up–shifts 3rd →O/D switch “OFF”		1																									
Up–shifts 3rd–O/D when E/G is cold		1																									
Harsh engagement	”N”→”R”								1				2									3					
	“N”→”D”							1															2				
	“N”→“L”																							1			
	1st →2nd (”D” range)												2												1		
	1st→1 2nd (2 range)																									1	
	1st →2nd →3rd																					1					2

See Page		AX–25	★	★	★	★	★	★	★	★	★	★	★	★	AX–66	★	AX–49	★	★	★	★	★	★	★
Parts Name / Trouble		Electrical control system check	Accumulator control valve	2nd coast bake (81)	CZ accumulator	U/D clutch (C3)	U / D brake (B,)	U/ D planetary gear	B4 accumulator	C3 accumulator	2nd coast modulator valve	82 accumulator	1st and reverse brake	Lock–up relay valve	Torque converter	U / D one–way clutch (F3)	Oil strainer	Pressure relief valve	Direct clutch (C2)	Forward clutch (C,)	No. 2 one–way clutch (F2)	Second brake (B2)	No. 1 one–way clutch (F,)	Low coast modulator valve
Harsh engagement	1st →2nd–3rd–O/D		1																					
	2nd →3rd			1	2																			
	3rd →O/D					1	2	3	4															
	O/D →3rd								1	2														
	3rd →2nd								1	2	3	4	5											
No lock–up		1												2	3									
No lock–up OFF		1												2	3									
Slip or shudder	Forward & Reverse (After warm–up)					3									1	2								
	Forward & Reverse (Directly after E/G start)														1		3	2						
	"R" range					2							3						1					
	1st																			1	2			
	2nd				1																	2	3	
	2nd →3rd (up–shift)																		1					
	3rd																		1					
	O/D						1																	
No engine braking	1st → 3rd					1																		
	1st												2											1
	2nd			1							2													

V00966

See Page		AX–25	*	*	*	*	*	AX–66	*	*	*	*	*	*
Parts Name / Trouble		Electrical control system check	2nd coast brake (B,)	U/D clutch (c_3)	U/D brake (B_4)	U / D planetary gear	1st and reverse brake (B3)	Torque converter	Direct Clutch (C2)	Forward clutch (C,)	Second brake (B?)	1–2 shift valve	2–3 shift valve	3–4 shift valve
Large shook during lock–up		1						2						
E/G stalls when starting off and stopping		1						2						
No kick–down		1										2	3	4
Poor acceleration	All–ranges							1						
	O/D			1		2								
	Other than O/D				1	2								
	Other than 2nd		1								2			
	1st and 2nd								1					
	1st and “R”						1	a						
	“R”									1				

VUM967

VALVE BODY

AX07P–01

VALVE BODY REMOVAL

1. CLEAN TRANSAXLE EXTERIOR

To help prevent contamination, clean the exterior of the transaxle.

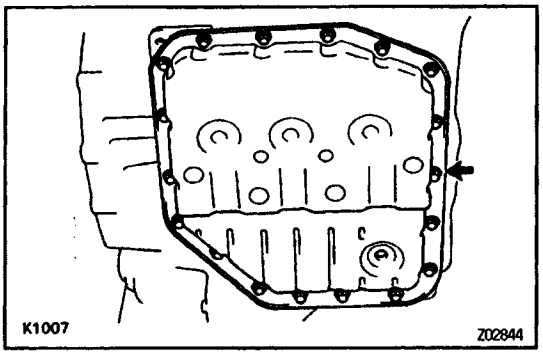

2. DRAIN TRANSAXLE FLUID

Remove the drain plug, gasket and drain the fluid into a suitable container.

3. REMOVE OIL PAN AND GASKET

NOTICE: Some fluid will remain in the oil pan. Remove all pan bolts, and carefully remove the oil pan assembly. Discard the gasket.

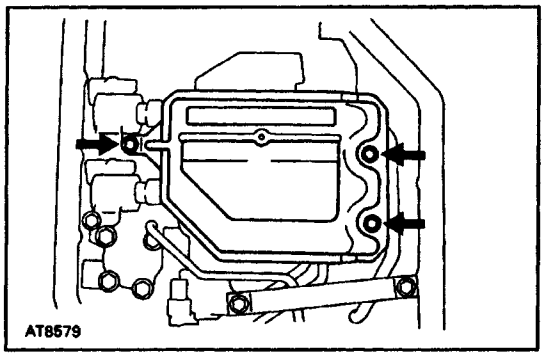

4. REMOVE OIL STRAINER

NOTICE: Be careful as some fluid will come out with the oil strainer.

Remove the. three bolts, oil strainer and gasket.

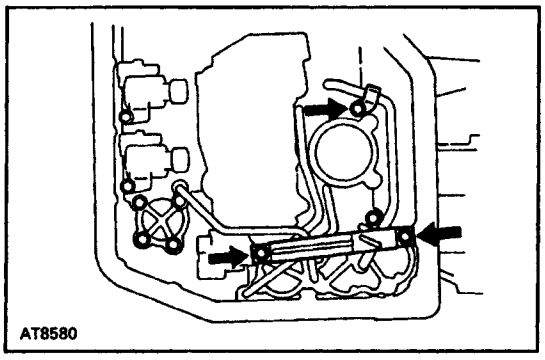

5. REMOVE APPLY OIL TUBE BRACKET AND OIL TUBE CLAMP

(a) Remove two bolts and apply tube bracket.
(b) Remove the bolt and oil tube clamp.

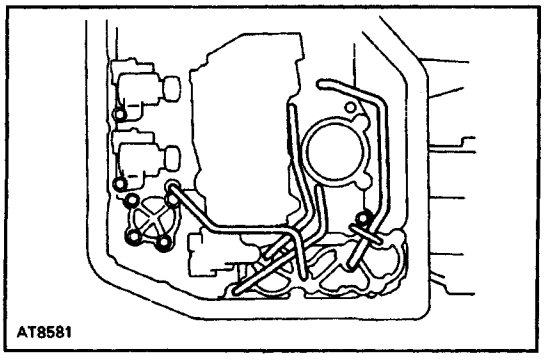

8. REMOVE OIL TUBES

Pry up the both tube ends with a large screwdriver and remove the five tubes.

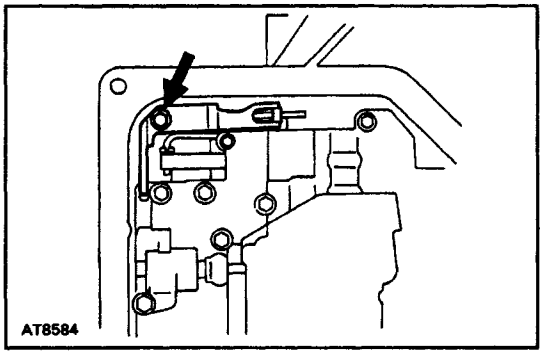

7. REMOVE MANUAL DETENT SPRING
8. DISCONNECT SOLENOID CONNECTOR

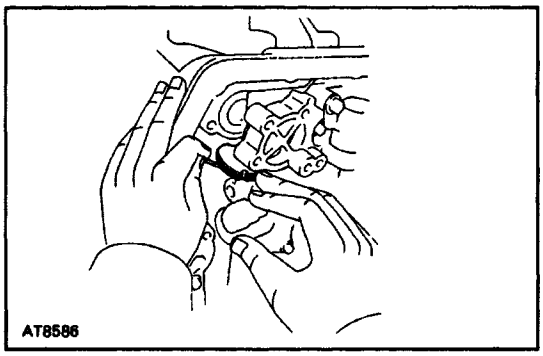

9. REMOVE VALVE BODY

(a) Disconnect the throttle cable.

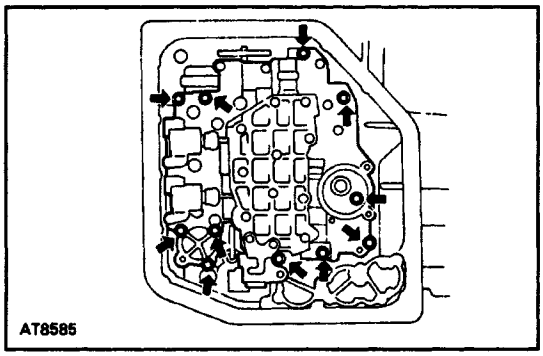

(b) Remove twelve bolts and wire retainer.

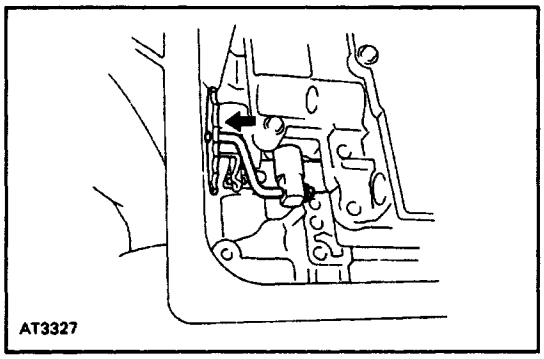

(c) Disconnect the manual valve connecting rod.
(d) Remove the valve body.

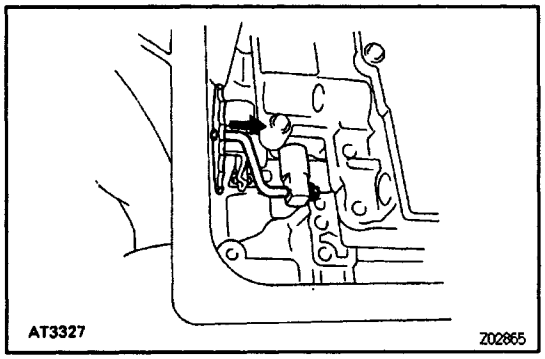

AX07Q–01

VALVE BODY INSTALLATION

1. INSTALL VALVE BODY

(a) Connect the manual valve connecting rod.

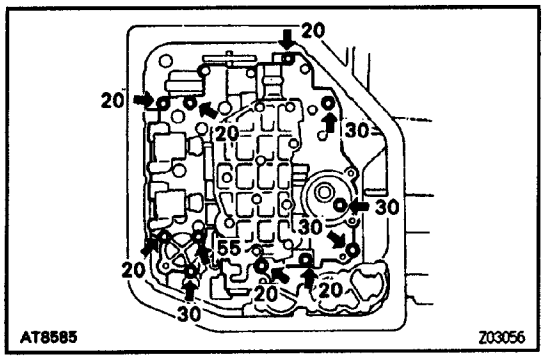

(b) Install the twelve bolts and wire retainer and hand tighten all bolts first. Then tighten them with a torque wrench.

HINT: Each bolt length (mm) is indicated in the figure.

Torque: 10 N–m (100 kgf–cm, 7 ft–lbf)

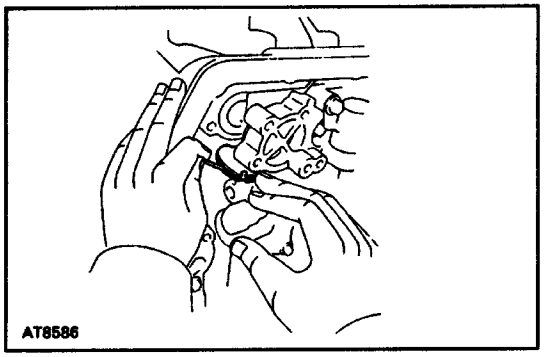

(c) Connect the throttle cable to the cam.

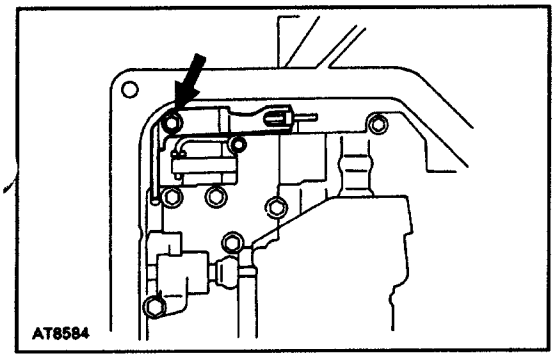

2. CONNECT SOLENOID CONNECTOR

3. INSTALL MANUAL DETENT SPRING

(a) Install and tighten 16 mm length bolt with a torque wrench.

Torque: 10 N–m (100 kgf–cm, 7 ft–lbf)

(b) Check that the manual valve lever is in contact with the center of the roller at the tip of the detent spring.

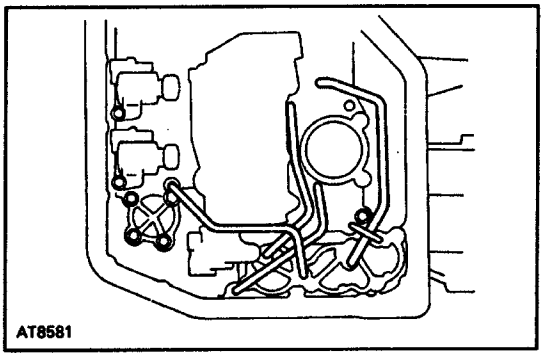

4. INSTALL OIL TUBES

(a) Tap the five tubes with a plastic hammer to install them into the positions indicated in the figure.

NOTICE: Be careful not to bend or damage the tubes.

(b) Install and torque the oil tube clamp.

Torque: 10 N–m (100 kgf–cm, 7 ft–lbf)

HINT: Each bolt length (mm) is indicated in the figure.

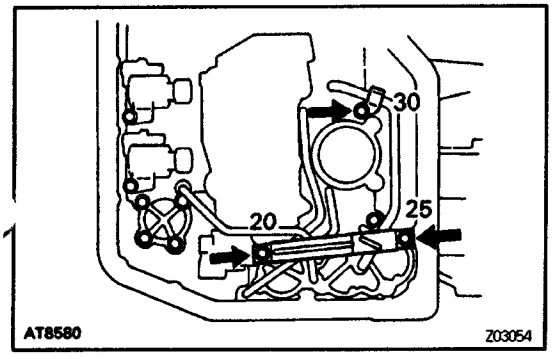

5. INSTALL OIL TUBE BRACKET AND OIL TUBE CLAMP

Install and torque the oil tube bracket.

HINT: Each bolt length (mm) is indicated in the figure.

Torque: 10 N–m (100 kgf.cm, 7 ft–lbf)

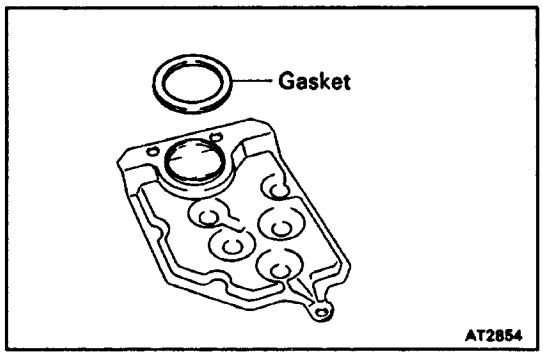

6. INSTALL OIL STRAINER

(a) Install a new gasket to the oil strainer.

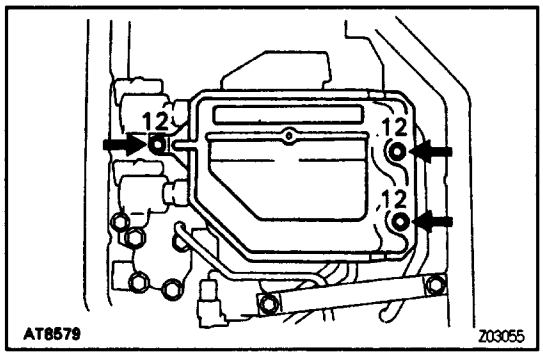

(b) Install the oil strainer and torque the three bolts.

HINT: Each bolt length (mm) is indicated in the illus–tration. .

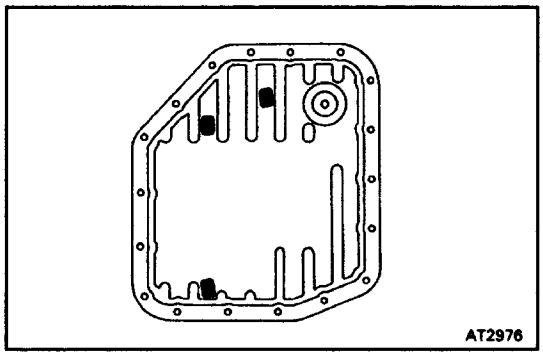

7. INSTALL THREE MAGNETS IN OIL PAN

NOTICE: Make sure that the magnets do not interfere with the oil tubes.

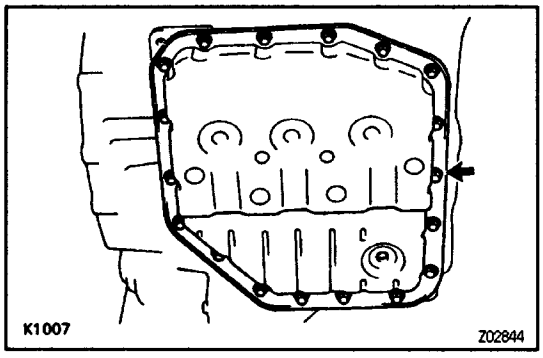

8. INSTALL OIL PAN

(a) Install a new gasket to the oil pan and install the oil pan.

(b) Tighten the eighteen bolts.

Torque: 4.9 N–m (50 kgf–cm, 43 in.–lbf)

9. INSTALL OIL PAN DRAIN PLUG

Torque: 17 N–m (175 kgf–cm, 13 ft–lbf)

10. FILL TRANSAXLE WITH ATF

(See page AX–14)

NOTICE: Do not overfill.

Fluid type:

ATF DEXRON®II

11. CHECK FLUID LEVEL

ASSEMBLY REMOVAL AND INSTALLATION

Removal and installation the parts as shown below.

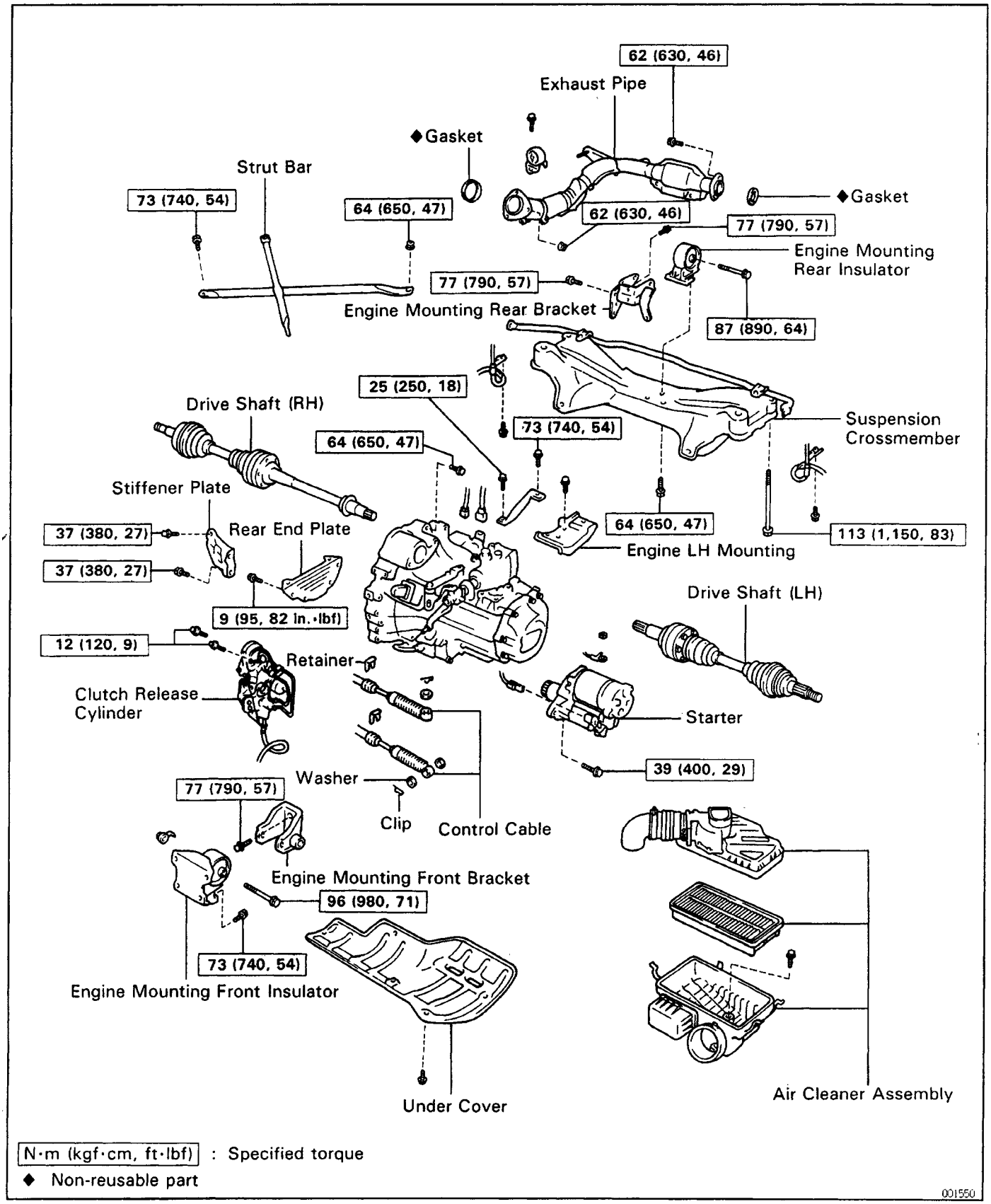

N·m (kgf·cm, ft·lbf) : Specified torque

◆ Non-reusable part

001550

MX04U–01

TRANSAXLE REMOVAL

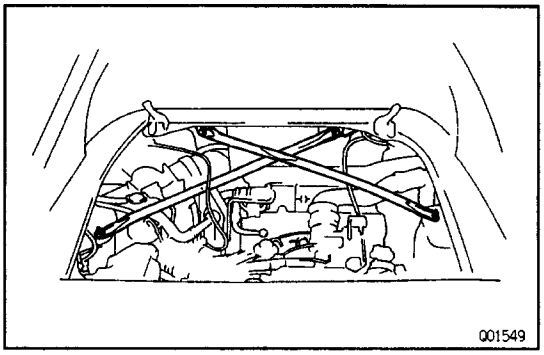

1. REMOVE NEGATIVE BATTERY CABLE

2. REMOVE STRUT BAR

Remove the two bolts, two nuts and strut bar.

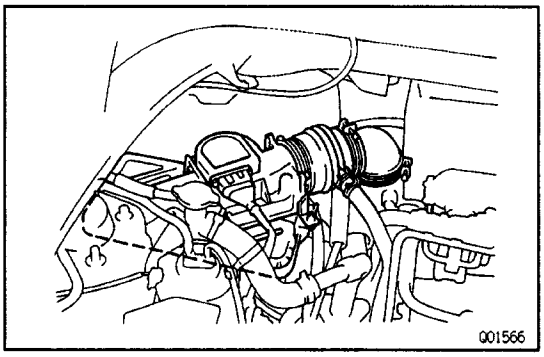

3. REMOVE AIR CLEANER HOUSING ASSEMBLY WITH AIR HOSE

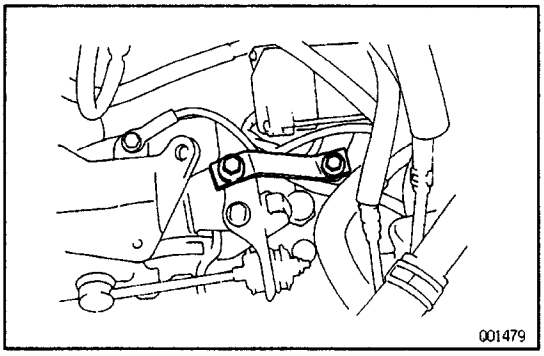

4. REMOVE LH ENGINE MOUNTING STAY

Remove the two bolts and mounting stay.

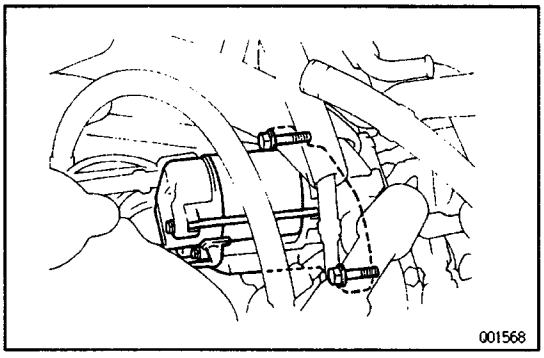

5. REMOVE STARTER

(a) Disconnect the connector and wire from the starter.

(b) Remove the two bolts and starter.

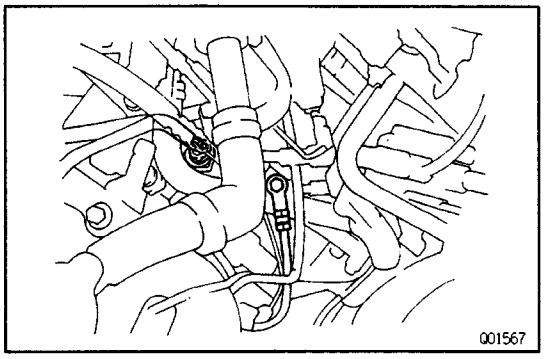

6. DISCONNECT BACK–UP LIGHT SWITCH CONNECTOR AND EARTH CABLE

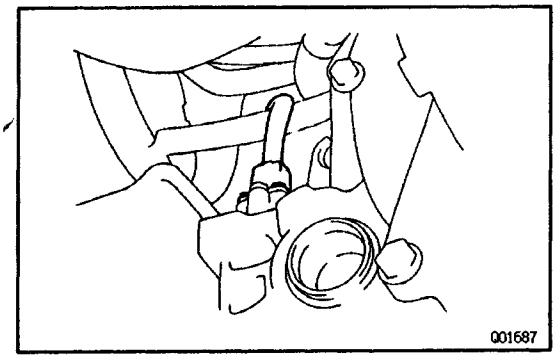

7. DISCONNECT VEHICLE SPEED PULSE GENERATOR CONNECTOR

8. REMOVE TRANSAXLE MOUNTING THREE BOLTS OF TRANSAXLE CASE UPPER SIDE ,

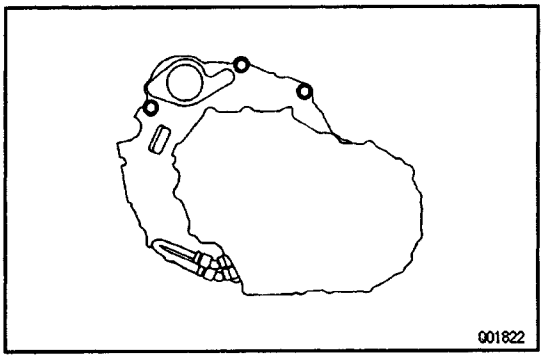

9. REMOVE REAR WHEELS

10. RAISE VEHICLE

NOTICE: Be sure the vehicle is securely supported.

11. REMOVE UNDERCOVER

Remove the five bolts and under cover.

12. DRAIN TRANSAXLE OIL

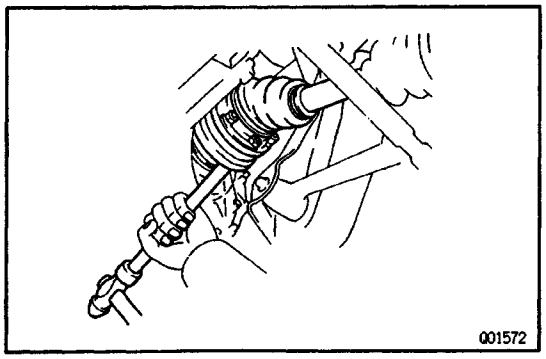

13. REMOVE DRIVE SHAFT

(See page SA–70**)**

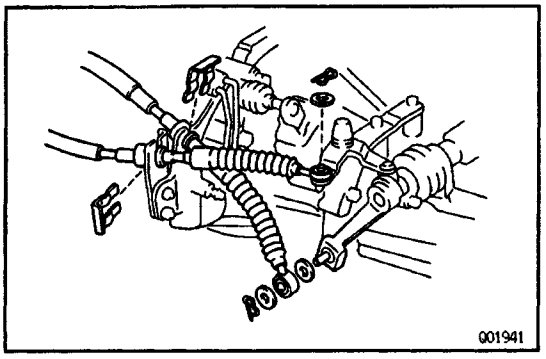

14. DISCONNECT CONTROL CABLES

(a) Remove the clips and washers.

(b) Remove the retainer from the cables.

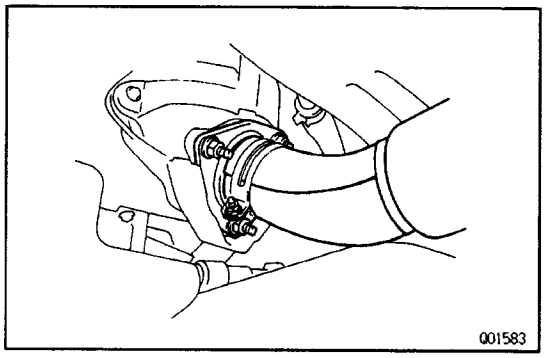

15. REMOVE FRONT EXHAUST PIPE
(a) Remove the three nuts.

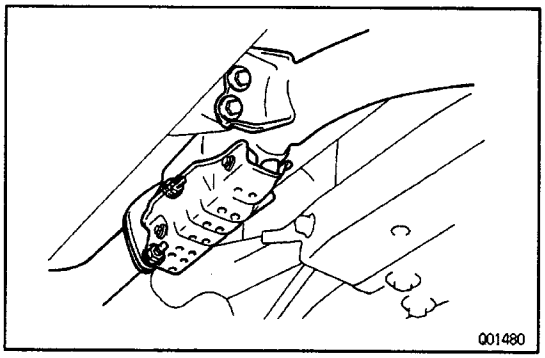

(b) Remove the foot bolts.
(c) Remove the front exhaust pipe and two gaskets.

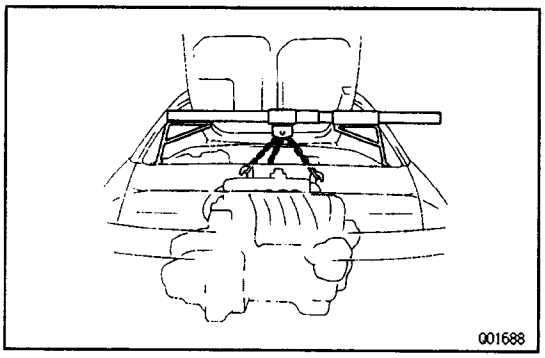

16. INSTALL ENGINE SUPPORT FIXTURE

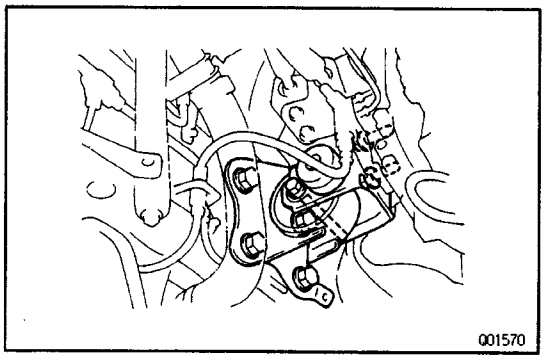

17. REMOVE ENGINE FRONT MOUNTING

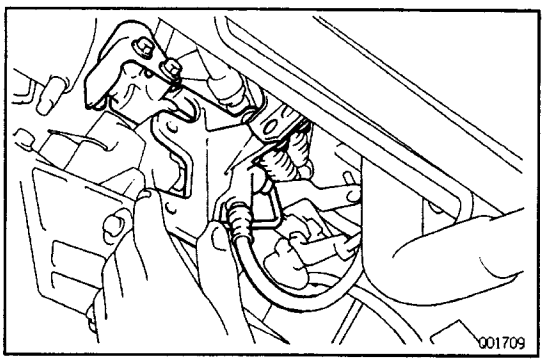

18. REMOVE CLUTCH RELEASE CYLINDER
Remove the two bolts and clutch release cylinder.

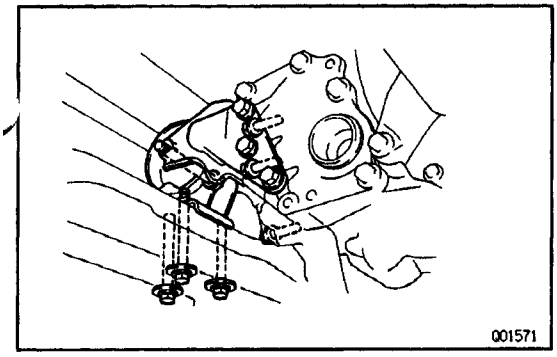

19. REMOVE ENGINE REAR MOUNTING

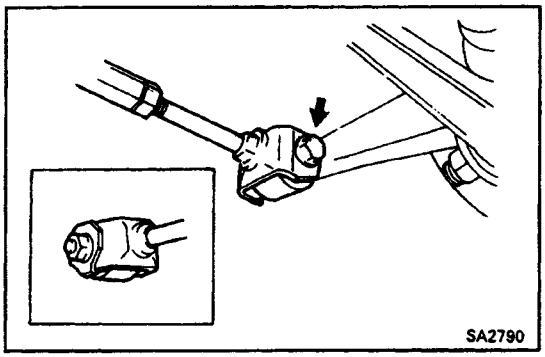

20. REMOVE SUSPENSION CROSSMEMBER

(a) Remove the bolt, nut and suspension arm from rear axle hub.

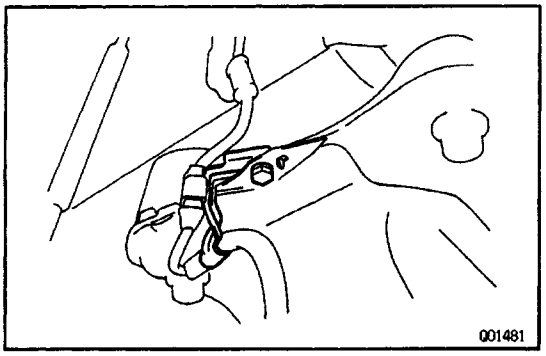

(b) Remove the bolt and disconnect the speed sensor= bracket from the rear suspension crossmember

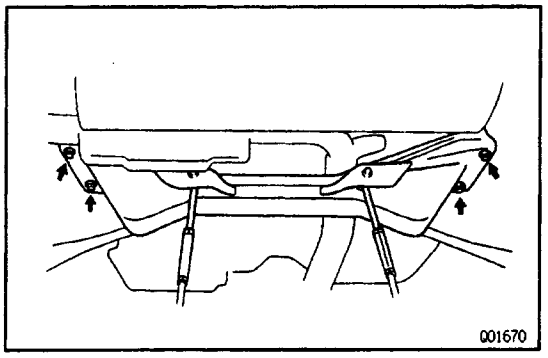

(c) Remove the four bolts and suspension crossmember

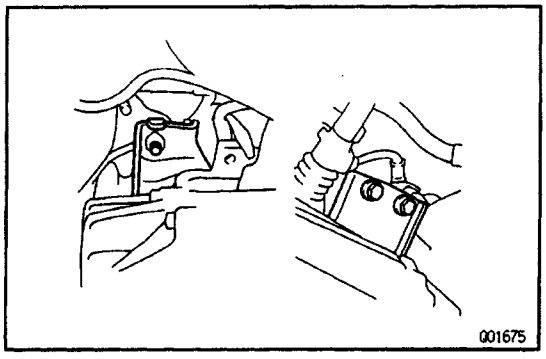

21. REMOVE ENGINE LH MOUNTING SET BOLTS

(a) Raise the transaxle and engine slightly with a jack and wooden block in between.

(b) Remove the three bolts.

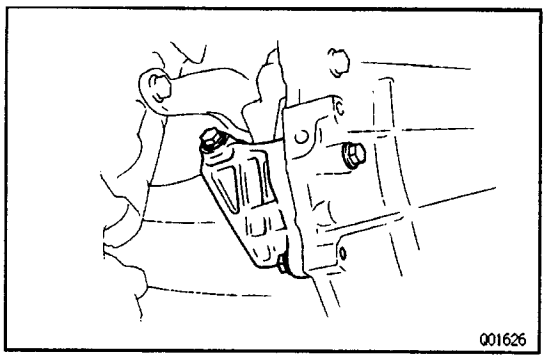

22. REMOVE STIFFENER PLATE

Remove the three bolts and stiffener plate.

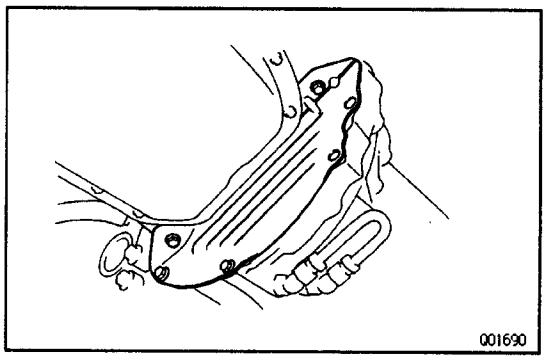

23. REMOVE REAR END PLATE

Remove the four bolts and rear end plate.

24. REMOVE TRANSAXLE

(a) Remove the transaxle mounting bolts from the engine.
(b) Lower the engine left side and remove the transaxle from the engine.

MX04V–01

TRANSAXLE INSTALLATION

(See page MX2–9)

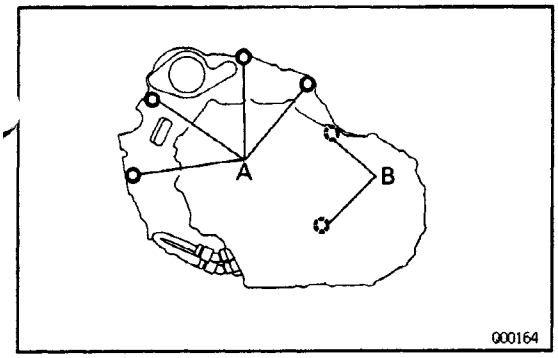

1. INSTALL TRANSAXLE TO ENGINE

(a) Align the input shaft spline with the clutch disc and install the transaxle to the engine.

(b) Torque the bolts.

Bolt A

Torque: 64 N–m (650 kgf–cm, 47 ft–lbf)

Bolt B

Torque: 46 N–m (470 kgf–cm, 34 ft–lbf)

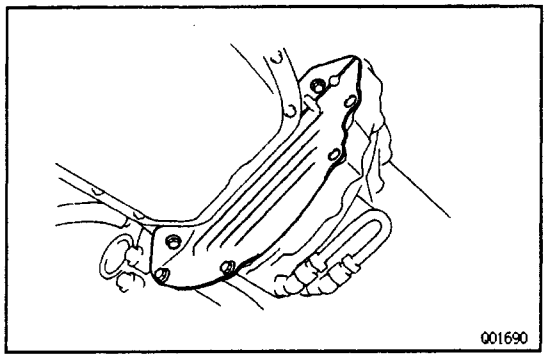

2. INSTALL REAR END PLATE

Install the rear end plate and torque the four bolts.

Torque: 9 N–m (95 kgf–cm, 82 in.–M)

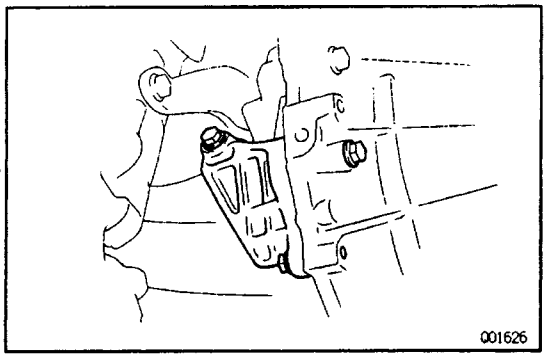

3. REMOVE STIFFENER PLATE

Install the stiffener plate with three bolts.

Torque: 37 N–m (380 kgf–cm, 27 ft–lbf)

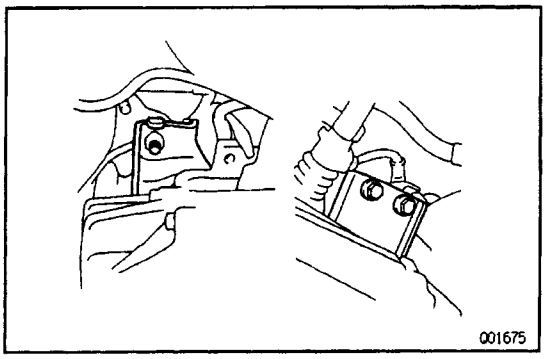

4. INSTALL ENGINE LH MOUNTING SET BOLTS

Raise the engine left side and install the three set bolts.

Torque: 64 N–m (650 kgf–cm, 47 ft–lbf)

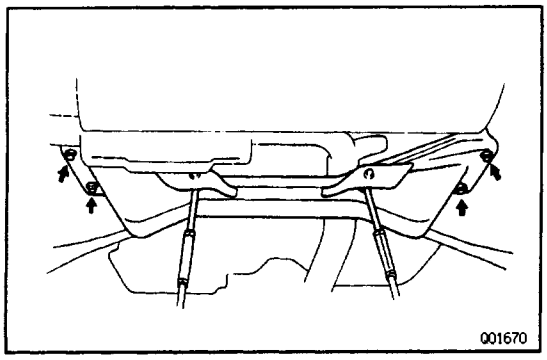

5. INSTALL SUSPENSION CROSSMEMBER

(a) Install the suspension crossmember in place, then install and tighten the four bolts.

Torque: 113 N–m (1,150 kgf–cm, 83 ft–lbf)

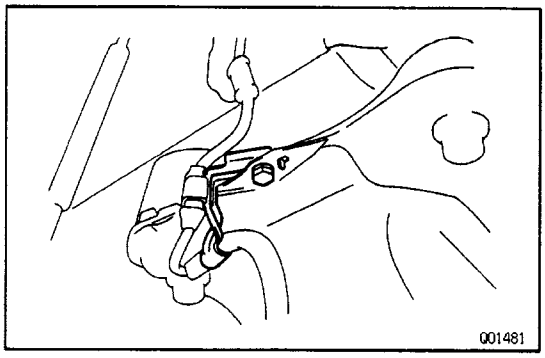

(b) Install the speed sensor bracket to suspension cro–ssmember.

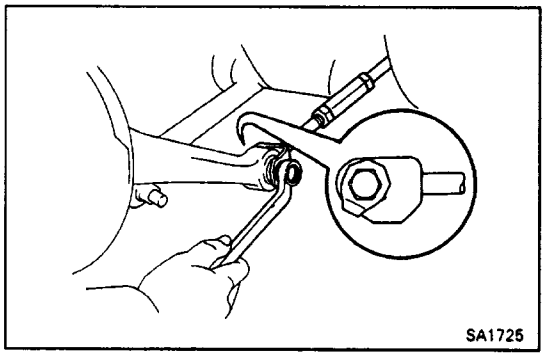

(c) Install the suspension arm with bolt and nut to rear axle hub.

Torque: 103 N–m (1,050 kgf–cm, 76 ft–lbf)

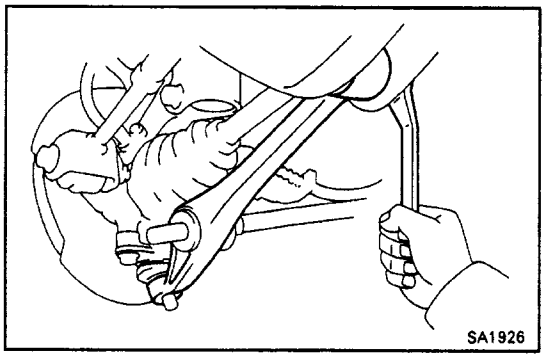

(d) Install the lower arm with bolt to suspension cross–member.

Torque: 132 N–m (1,350 kgf–cm, 98 ft–lbf)

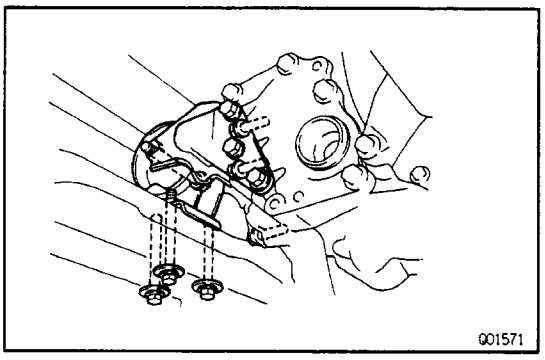

6. INSTALL ENGINE REAR MOUNTING

Transaxle side

Torque: 77 N–m (790 kgf–cm, 57 ft–lbf)

Crossmember side

Torque: 64 N–m (650 kgf–cm, 47 ft–lbf)

Through bolt

Torque: 87 N–m (890 kgf–cm, 64 ft–lbf)

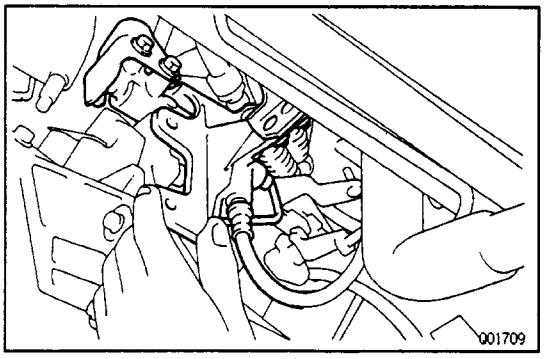

7. INSTALL CLUTCH RELEASE CYLINDER

Place the release cylinder and torque the two bolts.

Torque: 12 N–m (120 kgf–cm, 9 ft–lbf)

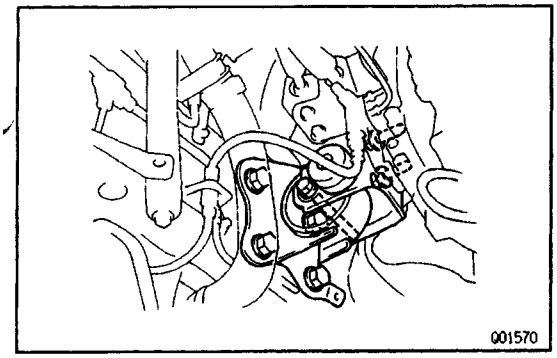

8. INSTALL ENGINE FRONT MOUNTING

Transaxle side

Torque: 77 N–m (790 kgf–cm, 57 ft–lbf)

Body side

Torque: 73 N–m (740 kgf–cm, 54 ft–lbf)

Through bolt

Torque: 96 N–m (980 kgf–cm, 71 ft–lbf)

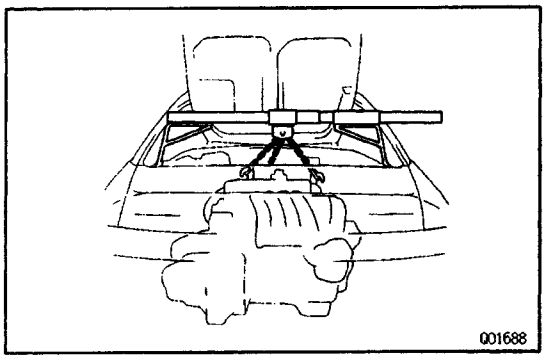

9. REMOVE ENGINE SUPPORT FIXTURE

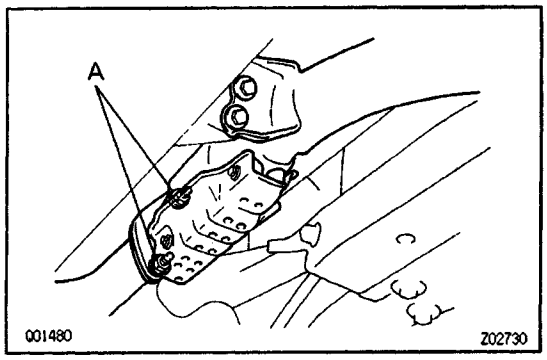

10. INSTALL FRONT EXHAUST PIPE

(a) Install the two new gaskets and front exhaust pipe.

(b) Install the four bolts.

(c) Torque the “A” bolts.

Torque: 62 N–m (630 kgf–cm, 46 ft–lbf)

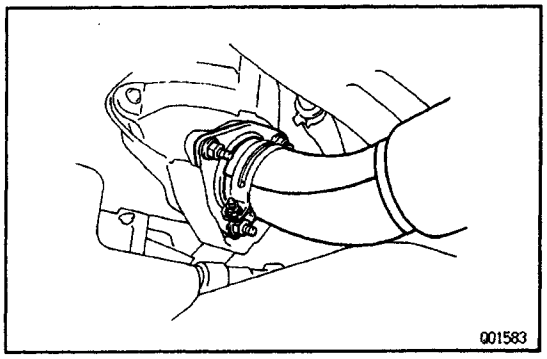

(d) Install and torque the three nuts.

Torque: 62 N–m (630 kgf–cm, 46 ft–lbf)

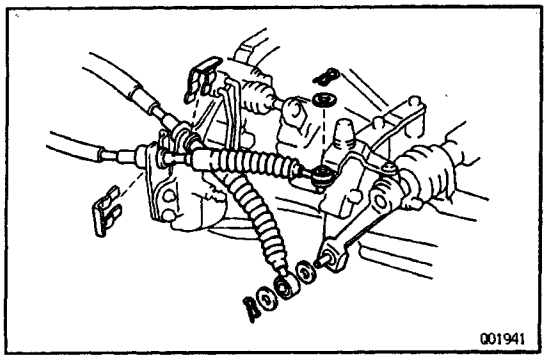

11. CONNECT CONTROL CABLES

(a) install the retainer to the cables.

(b) Connect the cables to the linkage with the washers and clips.

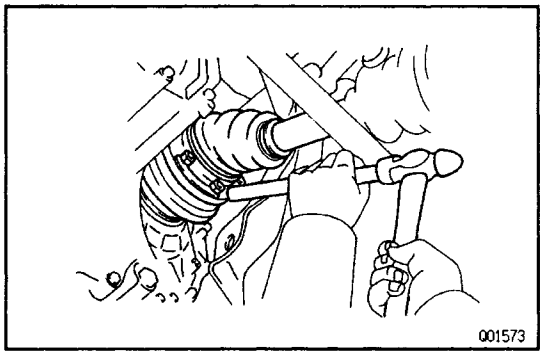

12. INSTALL DRIVE SHAFT
(See page SA–70)

13. FILL TRANSAXLE WITH GEAR OIL
Oil:
Gear oil super (08885–02106) or equivalent
Recommended oil
Oil grade:
API GL–3, GL–4 or GL–5
Viscosity:
SAE 75W–90 or 80W–90
Above–18˚ C (0˚ F) SAE 90
Below–18˚ C (0˚ F) SAE 80W
Standard Type
Capacity: 4.2 liters (4.4 US qts, 3.7 Imp.qts)
Viscous Coupling LSD Type
Capacity: 3.9 Liters (4.1 US qts, 3.4 Imp. qts)

14. INSTALL UNDER COVER
Install the under cover and five bolts.

15. INSTALL REAR WHEELS AND LOWER VEHICLE

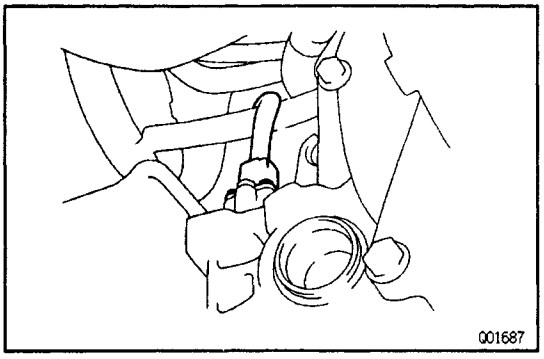

16. CONNECT VEHICLE SPEED PULSE GENERATOR CONNECTOR

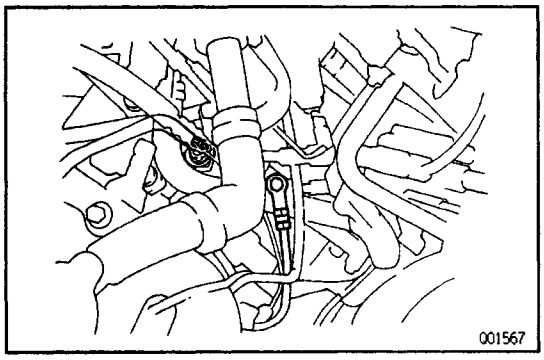

17. CONNECT BACK–UP LIGHT SWITCH CONNEC–TOR AND EARTH CABLE

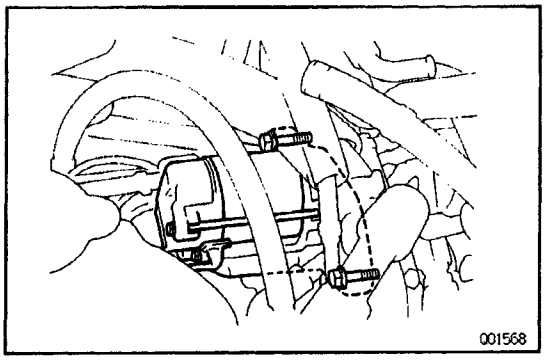

18. INSTALL STARTER

(a) Install the starter.

(b) Install and torque the two bolts.

Torque: 39 N–m (400 kgf–cm, 29 ft–lbf)

(c) Connect the connector and wire to the starter.

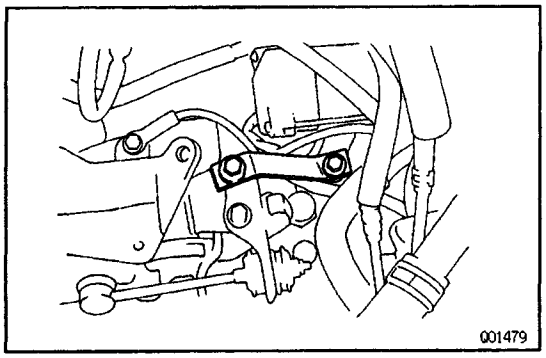

19. INSTALL LH ENGINE MOUNTING STAY

Install the mounting stay with two bolts.

Body side

Torque: 73 N–m (740 kgf–cm, 54 ft–lbf)

Transaxle side

Torque: 25 N–m (250 kgf–cm, 18 ft–lbf)

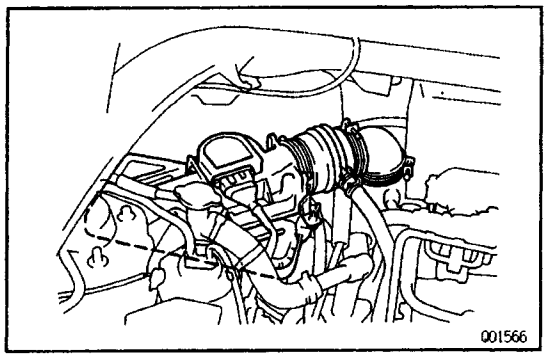

20. INSTALL AIR CLEANER HOUSING ASSEMBLY:: WITH AIR HOSE

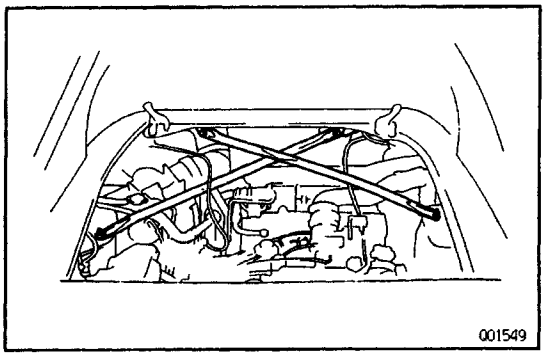

21. INSTALL STRUT BAR

Install the strut bar with two bolts and two nuts.

Bolt

Torque: 73 N–m (740 kgf–cm, 54 ft–lbf)

Nut

Torque: 64 N–m (650 kgf–cm, 47 ft–lbf)

22. INSTALL NEGATIVE BATTERY CABLE

23. INSPECT REAR WHEEL ALIGNMENT

(See page SA–7)

24. PERFORM ROAD TEST

Check for abnormal noise and smooth shifting.

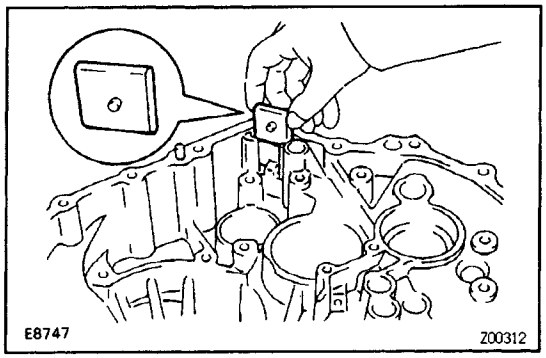

COMPONENT PARTS INSTALLATION

BASIC SUBASSEMBLY REASSEMBLY

(See pages MX2–20 to MX2–22)

HINT: Coat all of the sliding and rotating surface with gear oil before assembly.

1. INSTALL MAGNET TO TRANSAXLE CASE

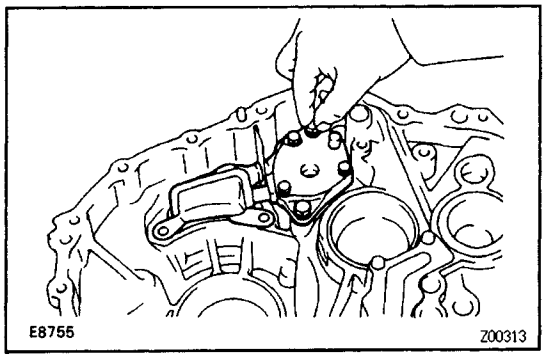

2. INSTALL OIL PUMP ASSEMBLY AND OIL PIPE

(a) Install the oil pump assembly.

(b) Install the two bolts.

HINT: Be careful not to drop the oil pump gasket.

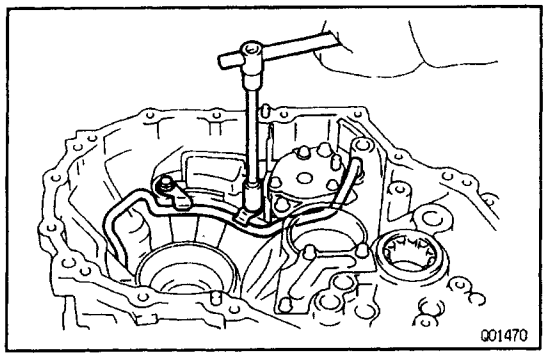

(c) Install the oil pipe and two bolts.

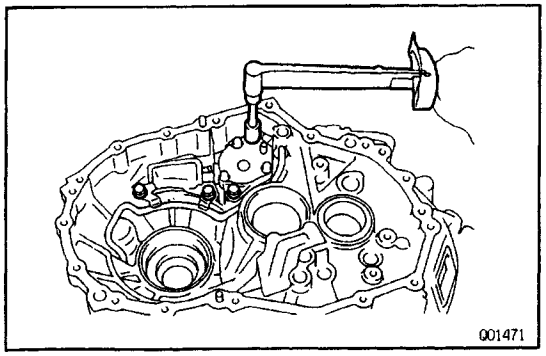

(d) Torque the four bolts.

Torque: 17 N–m (175 kgf–cm, 13 ft–lbf)

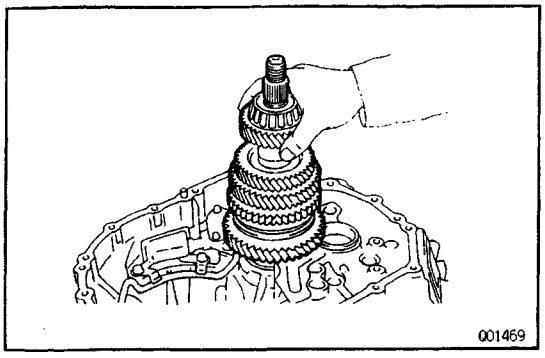

3. ADJUST OUTPUT SHAFT PRELOAD

(a) Install the output shaft assembly.

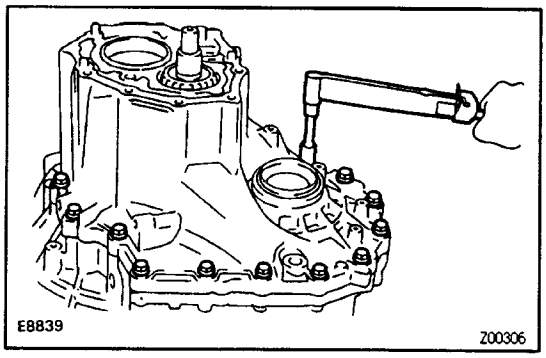

(b) Install the transmission case.
HINT: If necessary, tap on the case with a plastic hammer.
(c) Install and torque the seventeen bolts.
Torque: 29 N–m (300 kgf–cm, 22 ft–lbf)
(d) Install the output shaft rear taper roller bearing outer race.

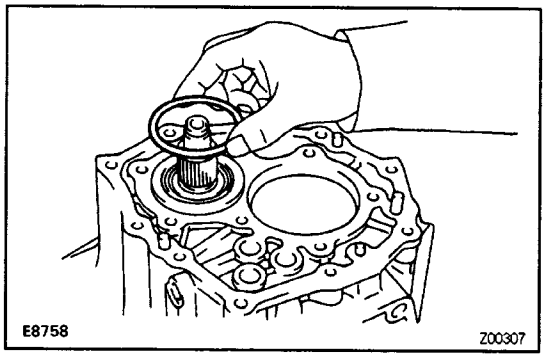

(e) Install the adjust shim.
HINT: When re–using the output shaft bearing, first install a shim of the same thickness as before. If installing a new tapered roller bearing, first select and install a shim of lesser thickness than before.

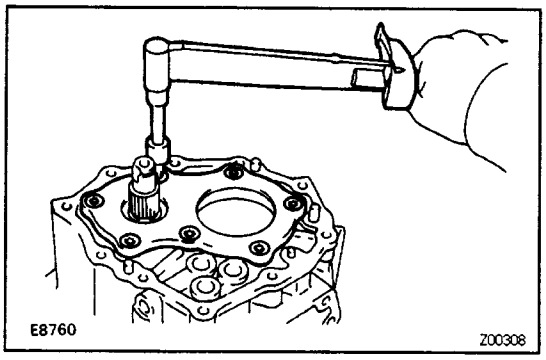

(f) Install the bearing retainer.
(g) Using a torx wrench, install and torque the seven bolts.
Torx wrench T45 09042–00050
Torque: 42 N–m (430 kgf–cm, 31 ft–lbf)
(h) Install a new lock nut to the output shaft.
(i) Turn the output shaft right and left two or three times to allow the bearings to settle.

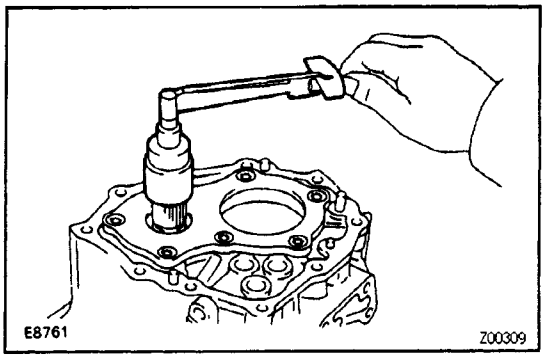

(j) Using a small torque wrench, measure the preload.

Preload (at starting):

New bearing

0.8–1.6 N–m (8–16 kgf–cm, 6.9–13.9 in.–M)

Reused bearing

0.6–1.0 N–m (5–10 kgf–cm, 4.3–8.7 in.–lbf)

If the preload is not within specification, select the thrust washers.

HINT: The preload will change about 0.4–0.5 N–m (4–5 kgf–cm, 3.5–4.3 in.lbf) with each shim thickness.

Mark	Thickness mm (in.)	Mark	Thickness mm (in.)
0	1.30 (0.0512)	D	1.95 (0.0768)
1	1.35 (0.0531)	E	2.00 (0.0787)
2	1.40 (0.0551	F	2.05 (0.0807)
3	1.45 (0.0571)	G	2.10 (0.0827)
4	1.50 (0.0591)	H	2.15 (0.0846)
5	1.55 (0.0610)	J	2.20 (0.0866)
6	1.60 (0.0630)	K	2.25 (0.0886)
7	1.65 (0.0650)	L	2.30 (0.0906)
8	1.70 (0.0669)	M	2.35 (0.0925)
9	1.75 (0.0689)	N	2.40 (0.0945)
A	1.80 (0.0709)	P	2.45 (0.0965)
B	1.85 (0.0728)	Q	2.50 (0.0984)
C	1.90 (0.0748)		

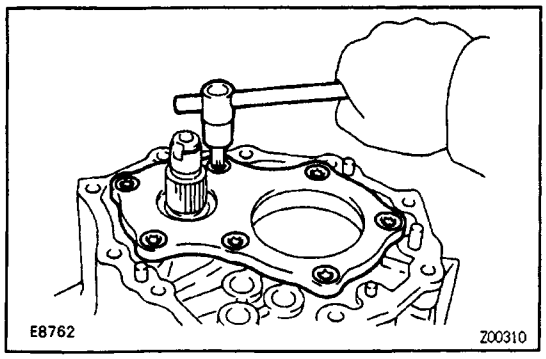

(k) Remove the lock nut.

(l) Using a torx wrench, remove the seven torx screws and rear bearing retainer.

Torx wrench T45 09042–00050

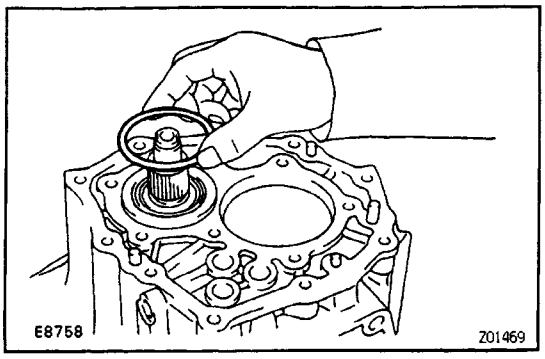

(m) Remove the shim.

(n) Remove the seventeen bolts and transmission case.

(o) Remove the output shaft assembly.

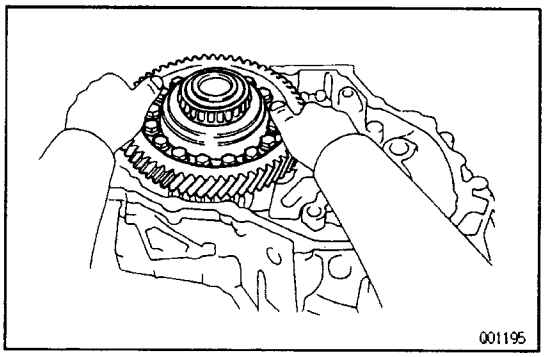

4. INSTALL DIFFERENTIAL CASE ASSEMBLY

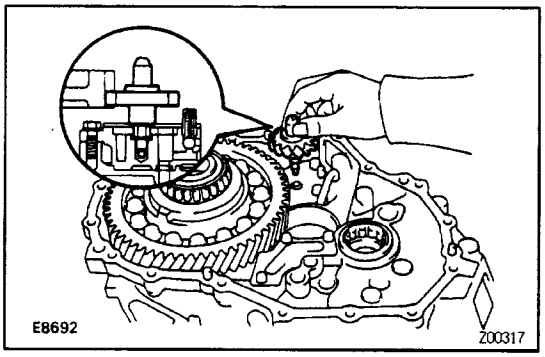

5. INSTALL OIL PUMP DRIVE GEAR

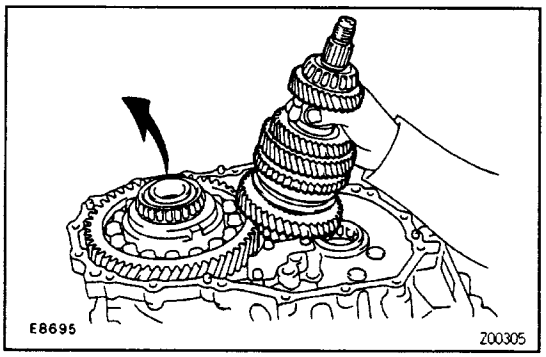

6. INSTALL OUTPUT SHAFT ASSEMBLY

(a) Lift up the differential case, install the output shaft assembly.

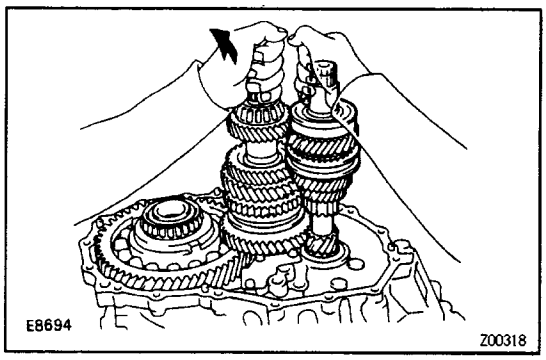

(b) Leaning the output shaft to the differential side, install the input shaft assembly.

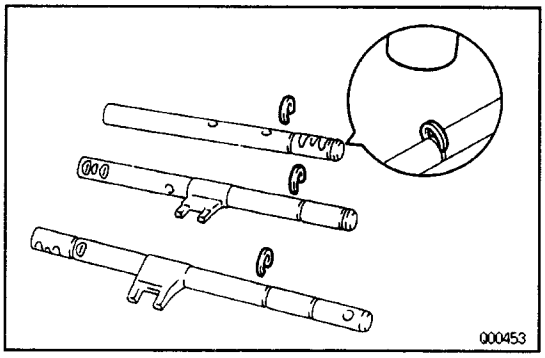

7. INSTALL SNAP RINGS

(a) Using a plastic hammer, install the snap rings to the No.1, No.2 and No.3 shift fork shafts.

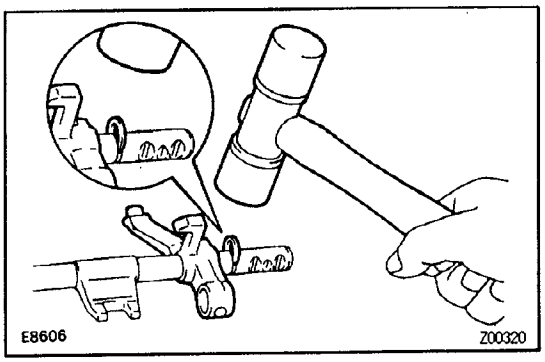

(b) Using a plastic hammer, the reverse shift fork and snap ring to the No.3 shift fork shaft.

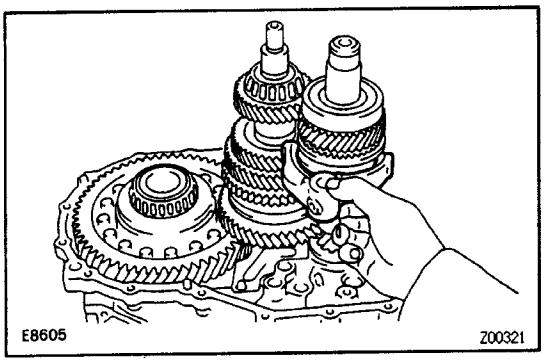

8. INSTALL N0.2 SHIFT FORK AND N0.3 SHIFT FORK SHAFT WITH REVERSE SHIFT FORK

(a) Install the No.2 shift fork to the No.2 hub sleeve.

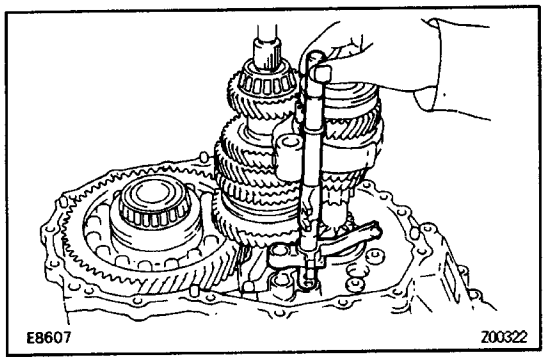

(b) Install the No.3 shift fork shaft with reverse shift fork.

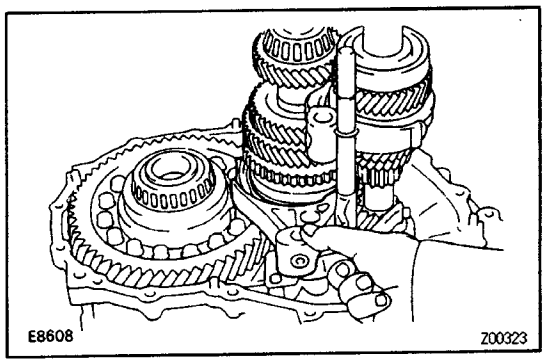

9. INSTALL N0.1 SHIFT FORK, SHIFT HEAD AND N0.2 SHIFT FORK SHAFT

(a) Install the No. 1 shift fork to the No. 1 hub sleeve.

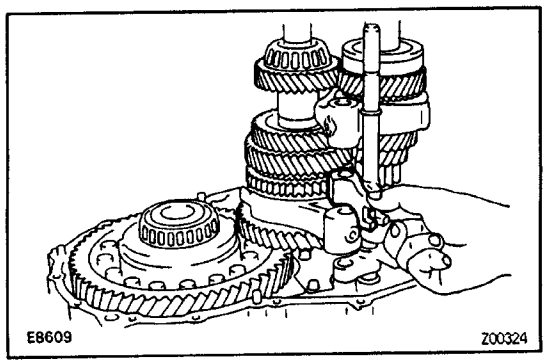

(b) Put shift head onto the No.1 shift fork.

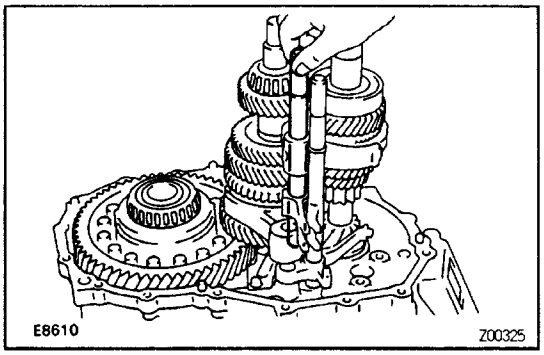

(c) Install the No.2 shift fork shaft to the transaxle case, through the shift head and No.1 shift fork.

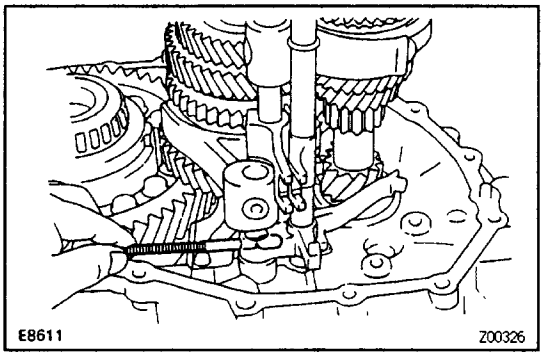

10. INSTALL INTERLOCK ROLLER

Using a magnetic finger, install the interlock roller to the reverse shift fork.

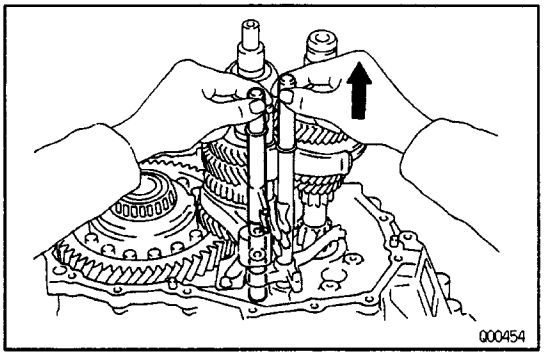

11. INSTALL NO.1 SHIFT FORK SHAFT

Install the No.1 shift fork shaft to the case, through the No.1 shift fork and reverse shift fork.

HINT: When it is difficult to the fork shaft through the reverse shift fork, pull up the No.3 shift fork shaft.

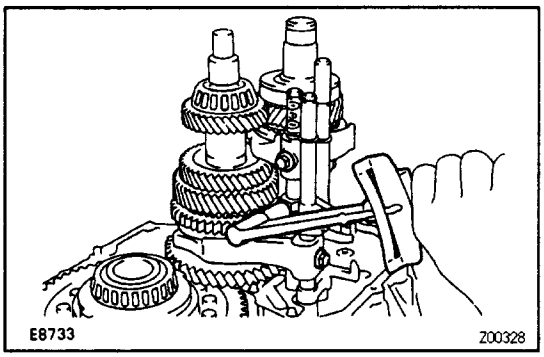

12. INSTALL SET BOLTS

Install and torque the three set bolts.

Torque: 24 N–m (240 kgf–cm, 17 ft–lbf)

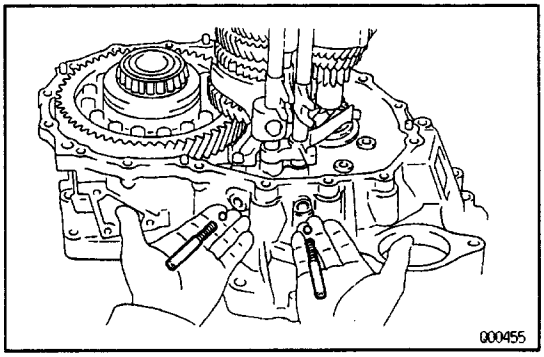

13. INSTALL TWO LOCKING BALLS, SPRINGS, SEATS AND PLUGS

(a) Install the two locking balls, springs and seats.

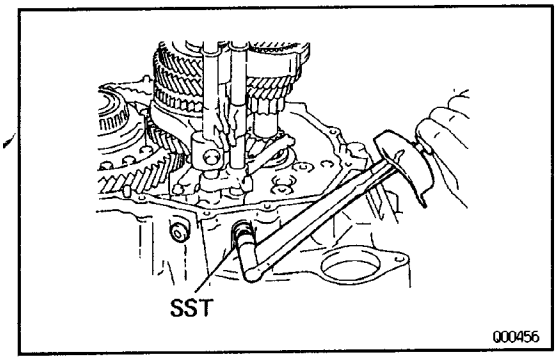

(b) Apply sealant to the two plugs.

Sealant:

Part No.08833–00080, THREE BOND 1344, LOC–TITE 242 or equivalent

(c) Using a hexagon wrench (6 mm), install and torque two plugs.

Torque: 25 N–m (250 kgf–cm, 18 ft–lbf)

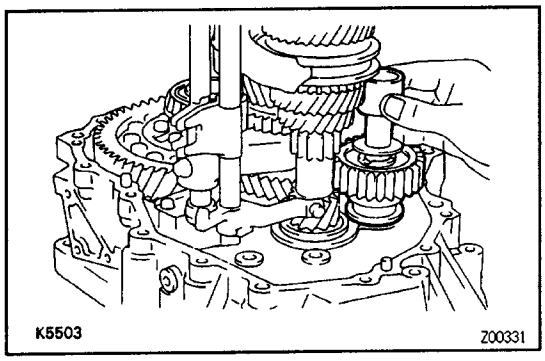

14. INSTALL REVERSE IDLER GEAR AND SHAFT

(a) Install the reverse idler gear shaft and thrust washer to the shaft.

(b) Install the reverse idler gear shaft into the case hole.

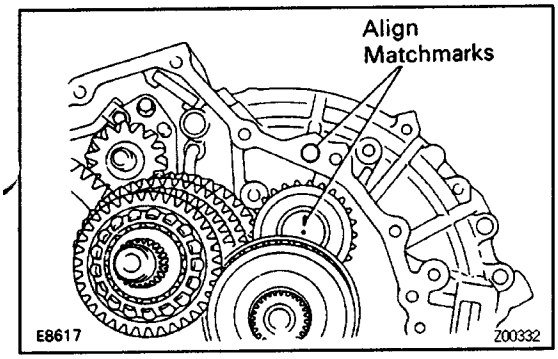

(c) Align matchmarks as shown.

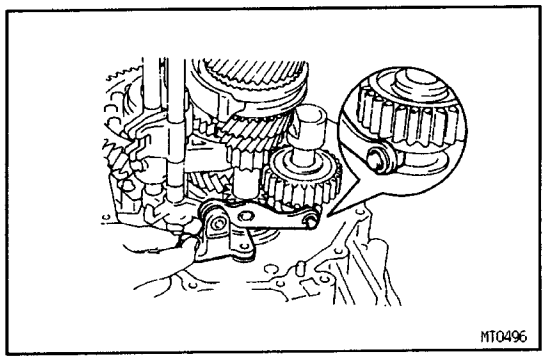

15. INSTALL REVERSE SHIFT ARM BRACKET AND NO.2 OIL PIPE

(a) Put the reverse shift fork pivot into the reverse shift arm install the reverse shift arm bracket to the tra–nsaxle case.

(b) Install the bolt.

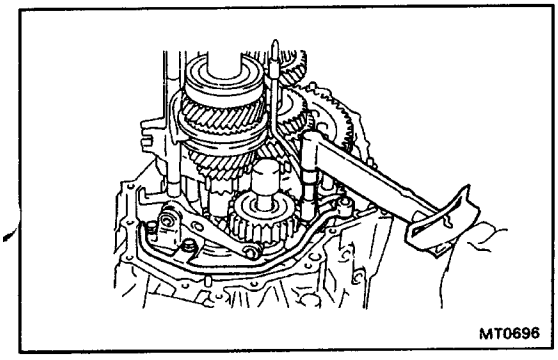

(c) Install the No.2 oil pipe and two bolts.

(d) Torque the reverse shift arm and oil pump bolts.

Torque: 17 N–m (175 kgf–cm, 13 ft–lbf)

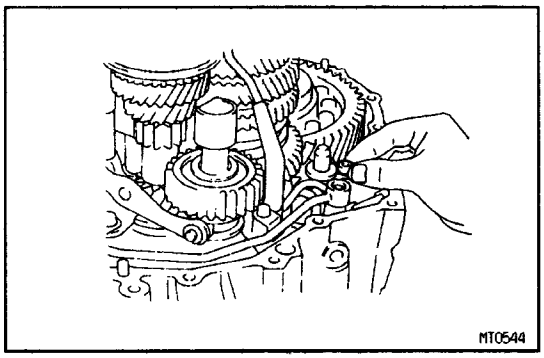

(e) Install a new gasket to the No.2 oil pipe.

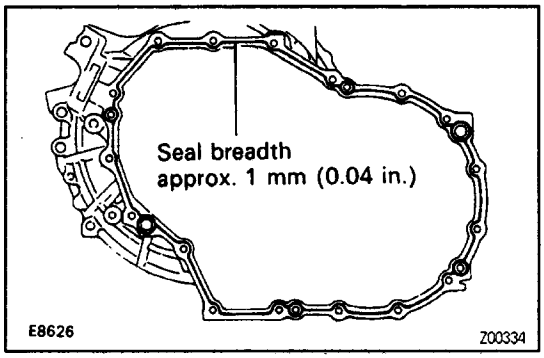

16. INSTALL TRANSMISSION CASE

(a) Remove the any packing material and be careful not to drop oil on the contacting surfaces of the trans–mission case or transaxle case.

(b) Apply seal packing to the transmission case as shown in the figure.

Seal packing:

Part No. 08826–00090, THREE BOND 1281 or equivalent

HINT: Install the transmission case as shown as the seal packing is applied.

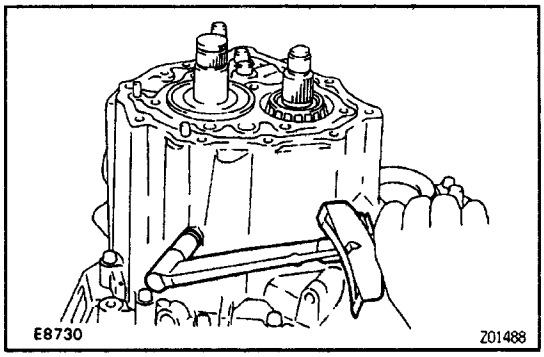

(c) Install and torque the fourteen bolts to the transmis–sion case side.

Torque: 28 N–m (300 kgf–cm, 22 ft–lbf)

(d) Install and torque the three bolts to the transaxle case side.

Torque: 29 N–m (300 kgf–cm, 22 ft–lbf)

17. INSTALL AND TORQUE REVERSE IDLER GEAR SHAFT RETAINING BOLT

Torque: 29 N–m (300 kgf–cm, 22 ft–lbf)

18. INSTALL LOCKING BALL, SPRING, SEAT AND PLUG

(a) Install the locking ball, spring and seat.

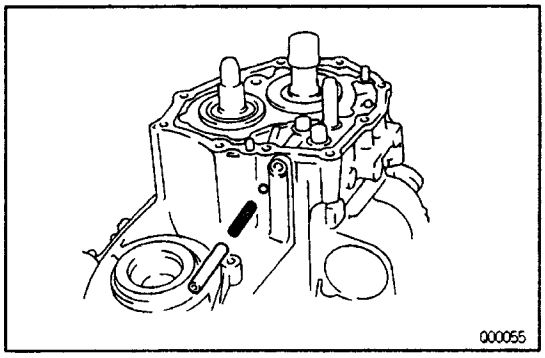

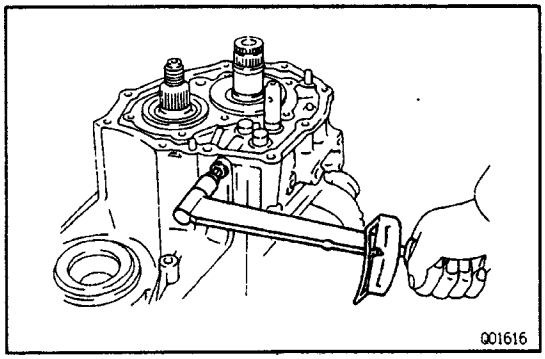

(b) Apply sealant to the plug.

Sealant:

Part No. 08833–00080, THREE BOND 7344, LOC–TITE 242 or equivalent

(c), Using a hexagon wrench (6 mm), install and torque the plug.

Torque: 25 N–m (250 kgf–cm, 18 ft–lbf)

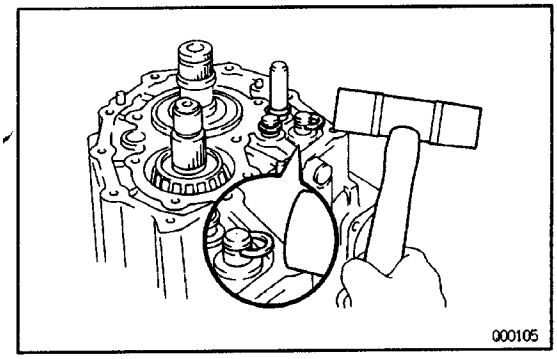

19. INSTALL SNAP RINGS

Using a plastic hammer, install the three snap rings.

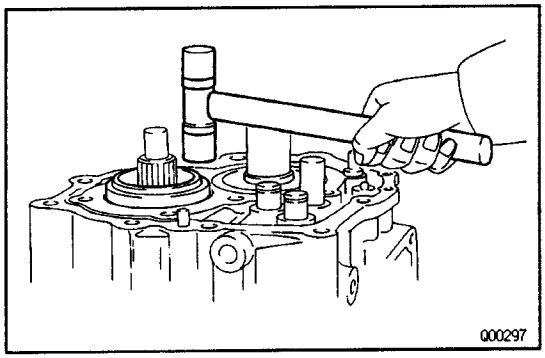

20. INSTALL OUTPUT SHAFT REAR TAPER ROLLER BEARING OUTER RACE

Using a plastic hammer, tap in the outer race.

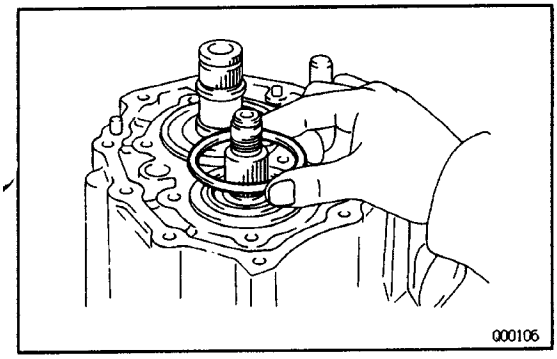

21. INSTALL SHIM

HINT: Install the previously selected.

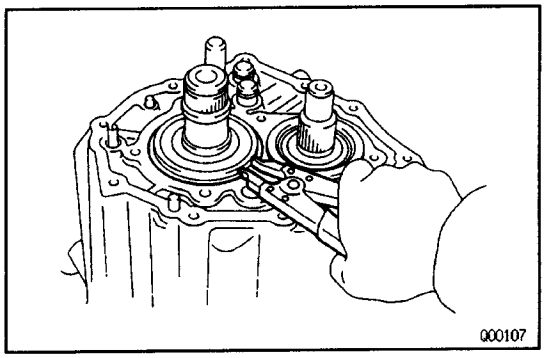

22. INSTALL SNAP RING

Using a snap ring expander, install the snap ring to the input shaft rear bearing.

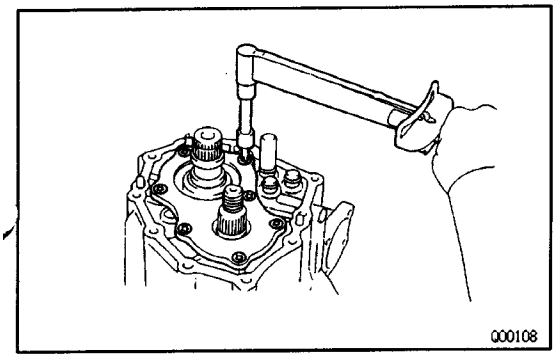

23. INSTALL REAR BEARING RETAINER

(a) Clean the threads of the torx screws.

(b) Using a torx wrench, install and torque the seven torx screws.

Torx wrench T45 09042–00050

Torque: 42 N–m (430 kgf–cm, 31 ft–lbf)

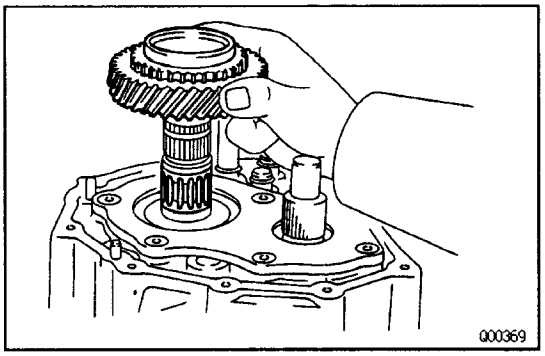

24. INSTALL NEEDLE ROLLER BEARING AND FIFTH GEAR

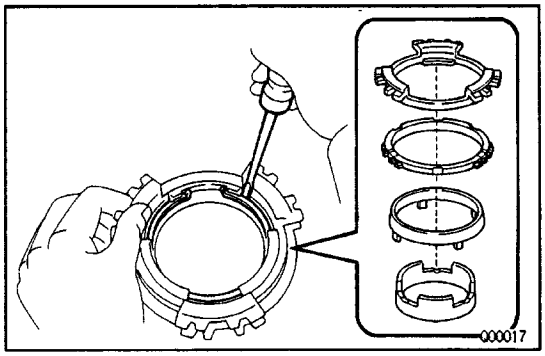

25. INSTALL N0.5 SYNCHRONIZER RINGS WITH KEY SPRING TO N0.3 CLUTCH HUB

(a) Assemble the No.5 synchronizer rings.

(b) Using a screwdriver, install the snap ring.

HINT: Wrap vinyl tape on the screwdriver to prevent damaging the synchronizer ring.

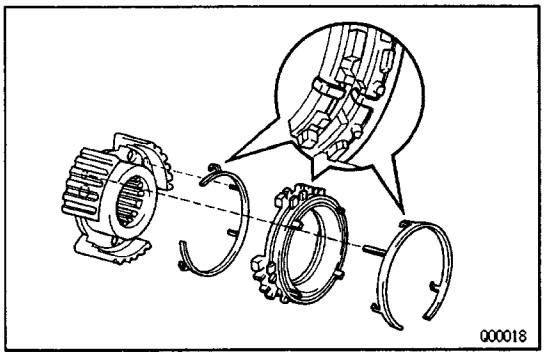

(c) Install the No.5 synchronizer rings with key springs to the No.3 clutch hub.

HINT: Align the holes of the clutch hub with key spring.

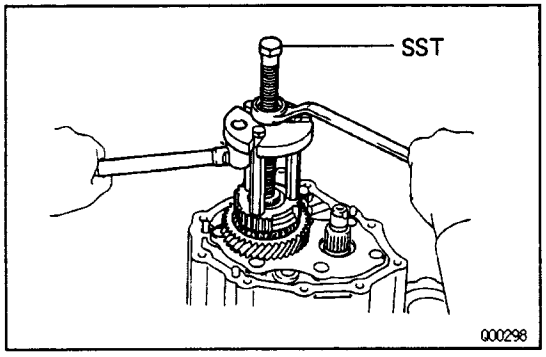

26. INSTALL No.3 CLUTCH HUB

Using SST, install the No.3 clutch hub with synchro–nizer ring and key spring.

SST 09310–17010 (09310–07010, 09310–07020, 09310–07030)

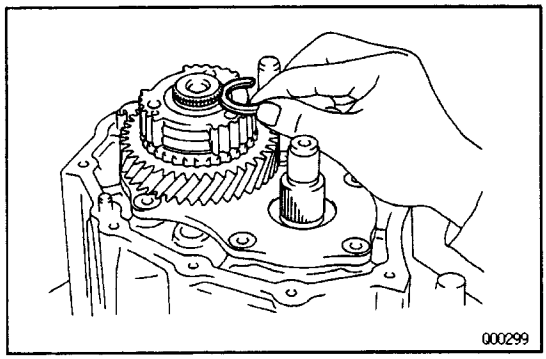

27. INSTALL SNAP RING

(a) Select a snap ring that will allow minimum axial play.

Mark	Thickness mm (in.)	Mark	Thickness mm (in.)
Q	2.25 (0.0886)	V	2.50 (0.0984)
R	2.30 (0.0906)	W	2.55 (0.1004)
S	2.35 (0.0925)	X	2.60 (0.1024)
T	2.40 (0.0945)	Y	2.65 (0.1043)
U	2.45 (0.0965)		

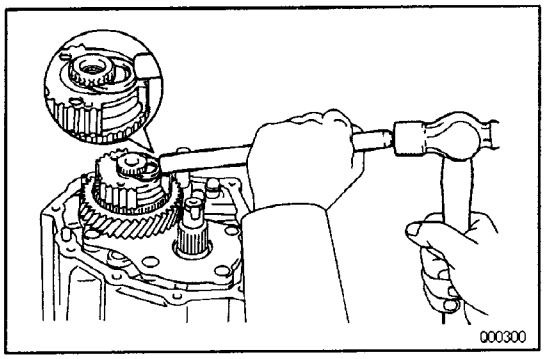

(b) Using a brass bar and hammer, install the snap ring.

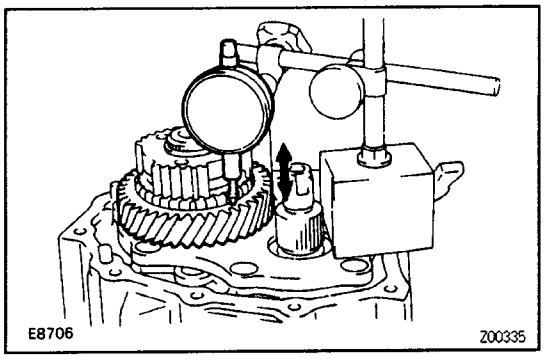

28. INSPECT FIFTH GEAR THRUST CLEARANCE

Using a dial indicator measure the 5th gear thrust clearance.

Standard clearance:

0.10–0.57 mm (0.0039–0.0224 in.)

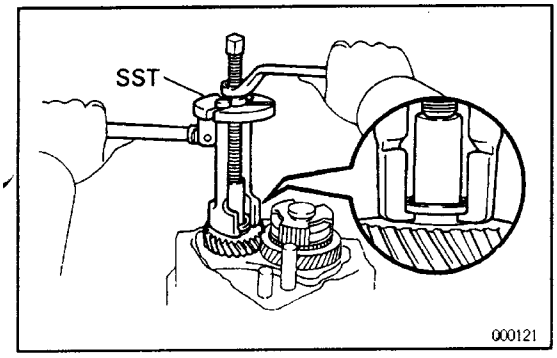

29. INSTALL FIFTH DRIVEN GEAR

Using SST, install the 5th driven gear.

SST 09310–17010 (09310–07010, 09310–07020, 09310–07040, 09310–07050)

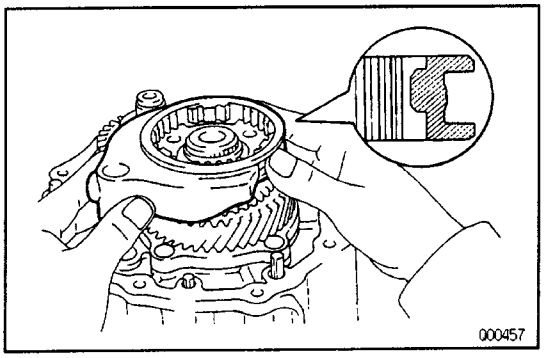

30. INSTALL NO. 3 HUB SLEEVE WITH N0.3 SHIFT FORK

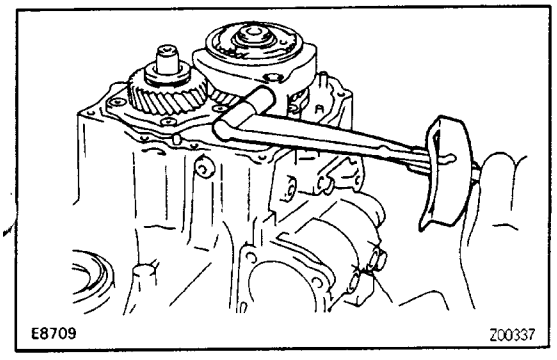

31. INSTALL SET BOLT

Install and torque the set bolt.

Torque: 24 N–m (240 kgf–cm, 17 ft–lbf)

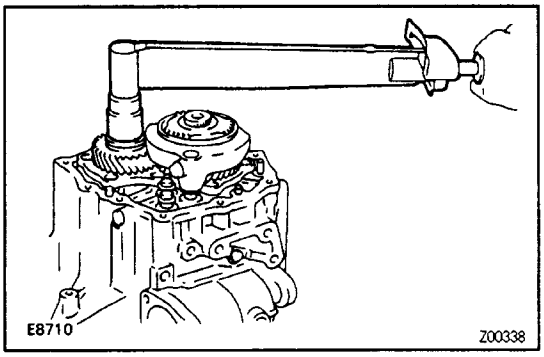

32. INSTALL LOCK NUT

(a) Engage the gear double meshing.

(b) Install and torque the lock nut.

Torque: 123 N–m (1,250 kgf–cm, 90 ft–lbf)

(c) Disengage the gear double meshing.

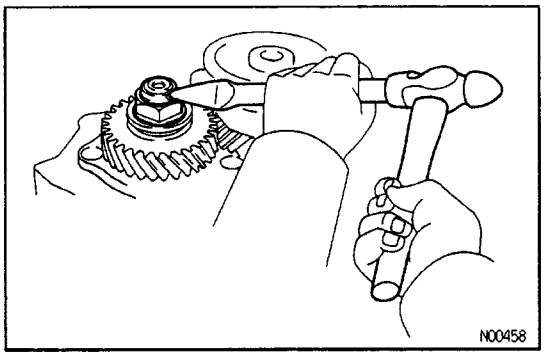

(d) Stake the lock nut.

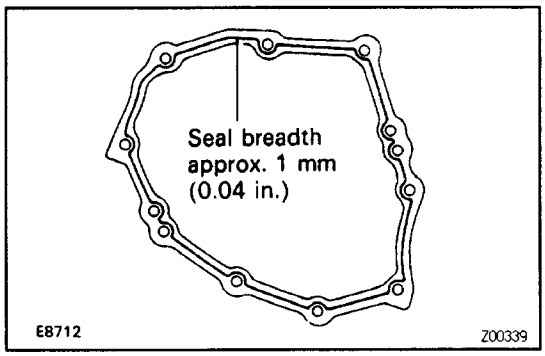

33. INSTALL TRANSMISSION CASE COVER

(a) Remove the any packing material and be careful not to drop oil on the contacting surfaces of the transmission case cover.

(b) Apply seal packing to the transmission case as shown in the figure.

Seal packing:

Part No. 08826–00080, THREE BOND 1281 or equivalent

HINT: Install the transmission case cover as soon as the seal packing is applied.

(c) Install and torque the ten bolts.

Torque: 29 N–m (300 kgf–cm, 22 ft–lbf)

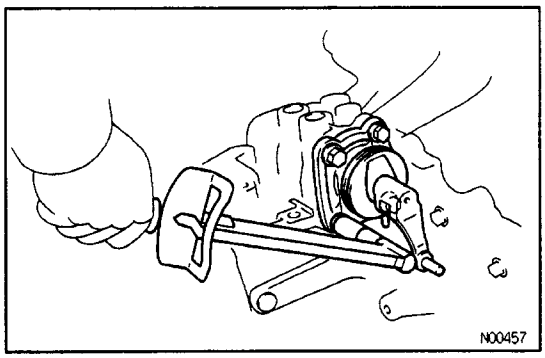

34. INSTALL SHIFT AND SELECT LEVER SHAFT ASSEMBLY

(a) Place a new gasket in position on the control shaft cover.

(b) Install the control shaft cover.

(c) Apply sealant to the bolt threads.

Sealant:

Part No. 08833–00080, THREE BOND 1344, LOCTITE 242 or equivalent

(d) Install and torque the four bolts.

Torque: 20 N–m (200 kgf–cm, 14 ft–lbf)

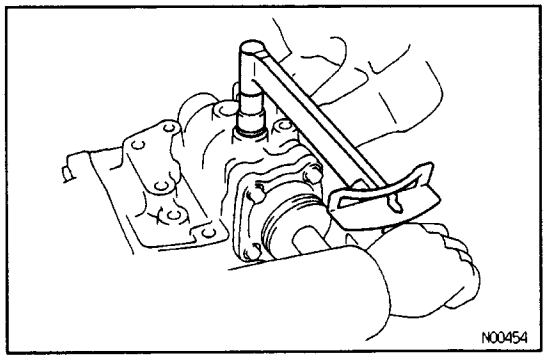

35. INSTALL AND TORQUE LOCK BOLT

Torque: 49 N–m (500 kgf–cm, 36 ft–lbf)

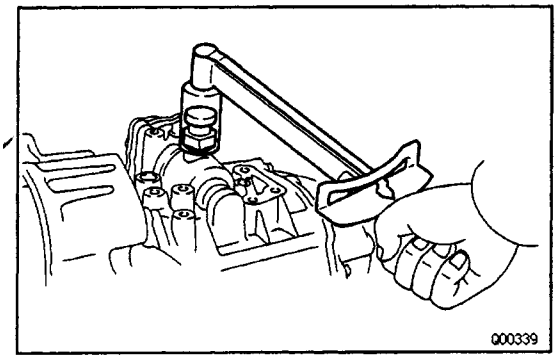

36. INSTALL BREATHER PLUG

Torque: 49 N–m (500 kgf–cm, 36 ft–lbf)

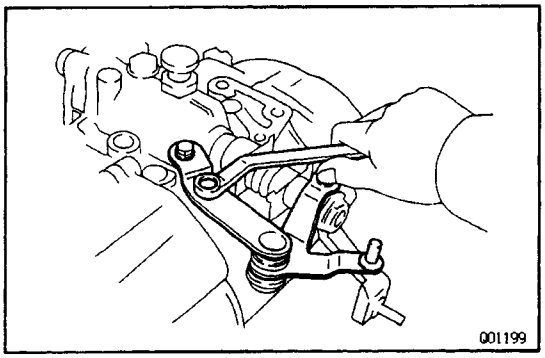

37. INSTALL SELECTING BELLCRANK ASSEMBLY

Install the selecting bellcrank assembly with two bolts.

Torque: 20 N–m (200 kgf–cm, 14 ft–lbf)

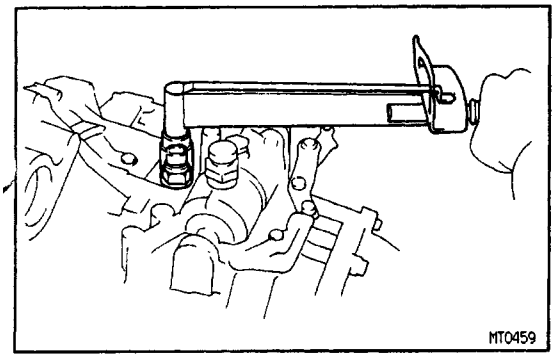

38. INSTALL BACK–UP LIGHT SWITCH

Torque: 40 N–m (410 kgf–crn. 30 ft–lbf)

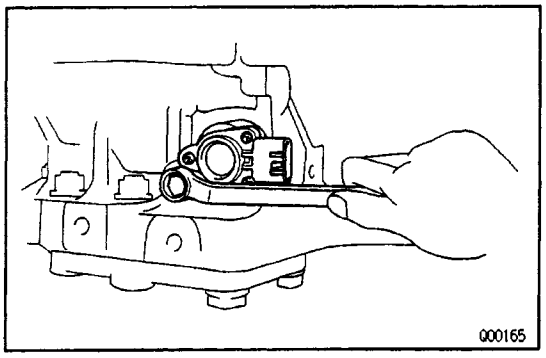

39. INSTALL VEHICLE SPEED PULSE GENERATOR

Torque: 7.4 N–m (75 kgf–cm, 65in. · lbf)

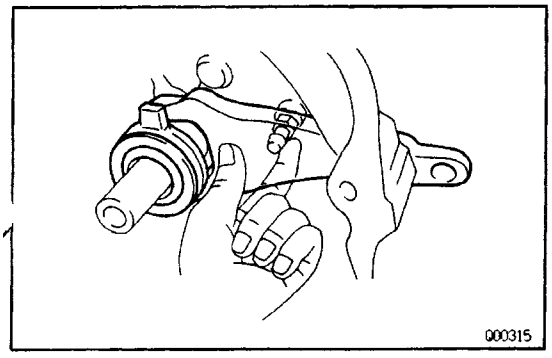

40. INSTALL RELEASE FORK AND BEARING

Apply molybdenum disulphide lithium base grease to the following parts:

- Input shaft spline
- Release fork contact surface

COMPONENT PARTS REMOVAL

MX014–02

COMPONENTS

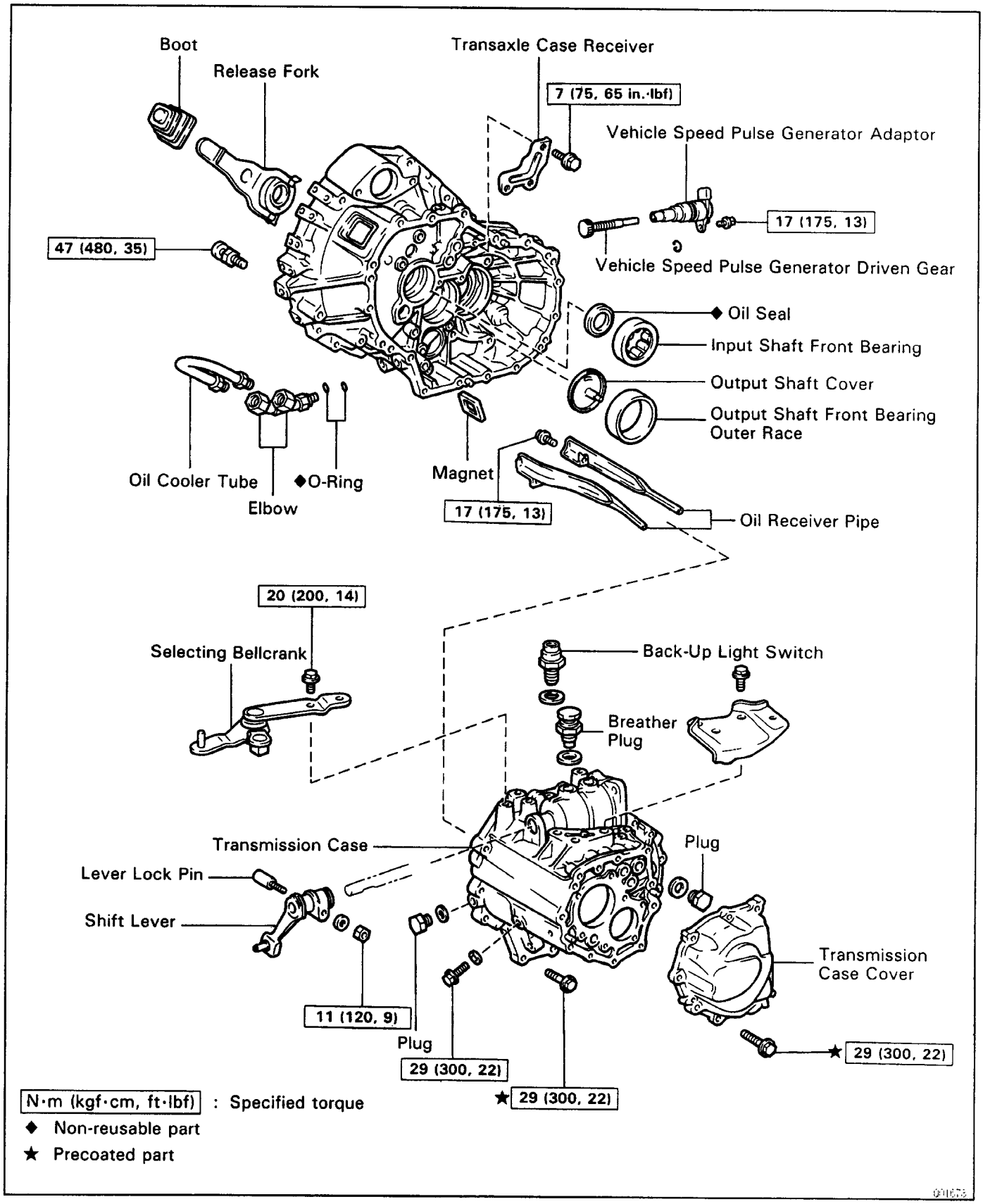

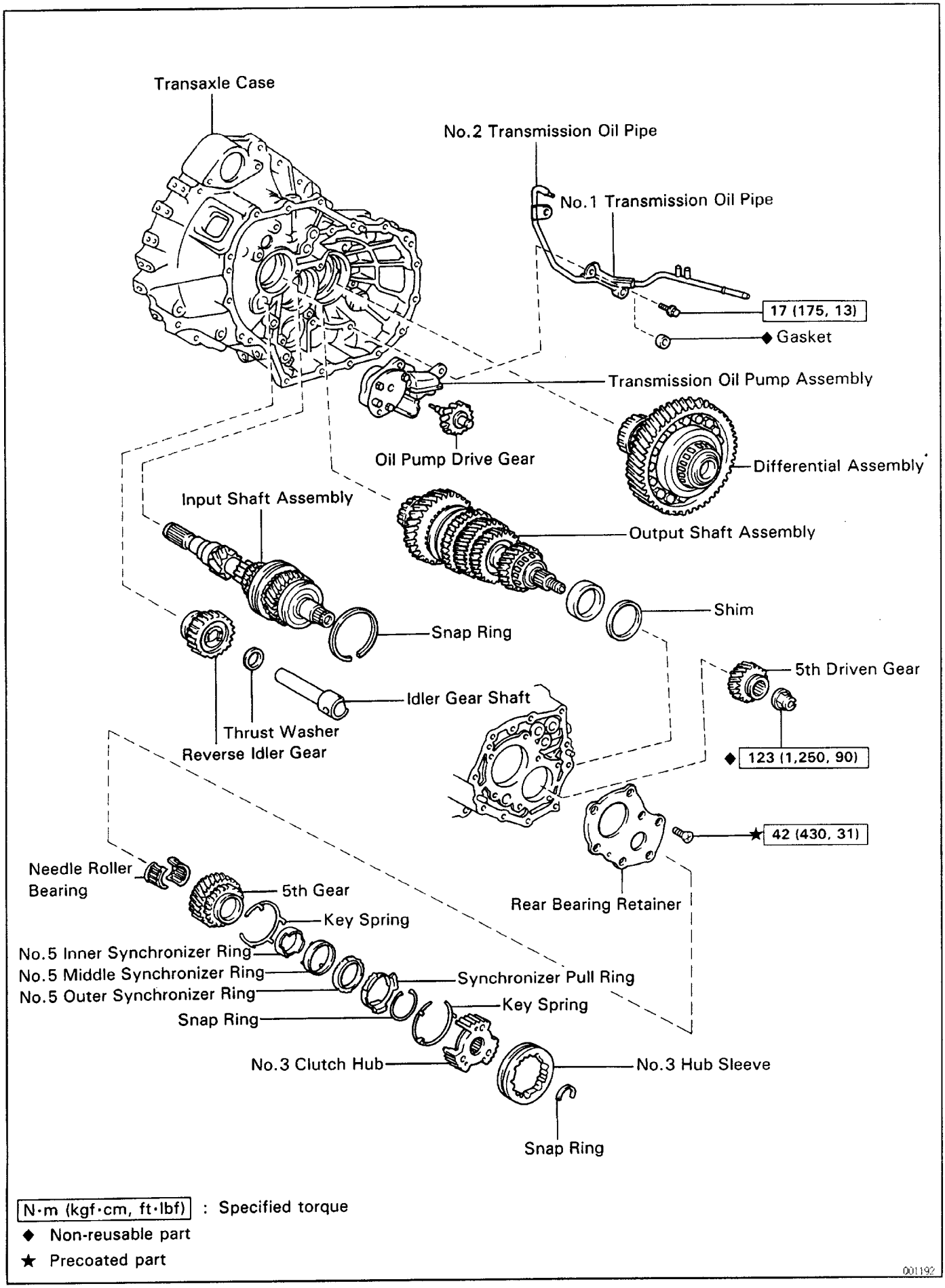

N·m (kgf·cm, ft·lbf) : Specified torque
◆ Non-reusable part
★ Precoated part

001192

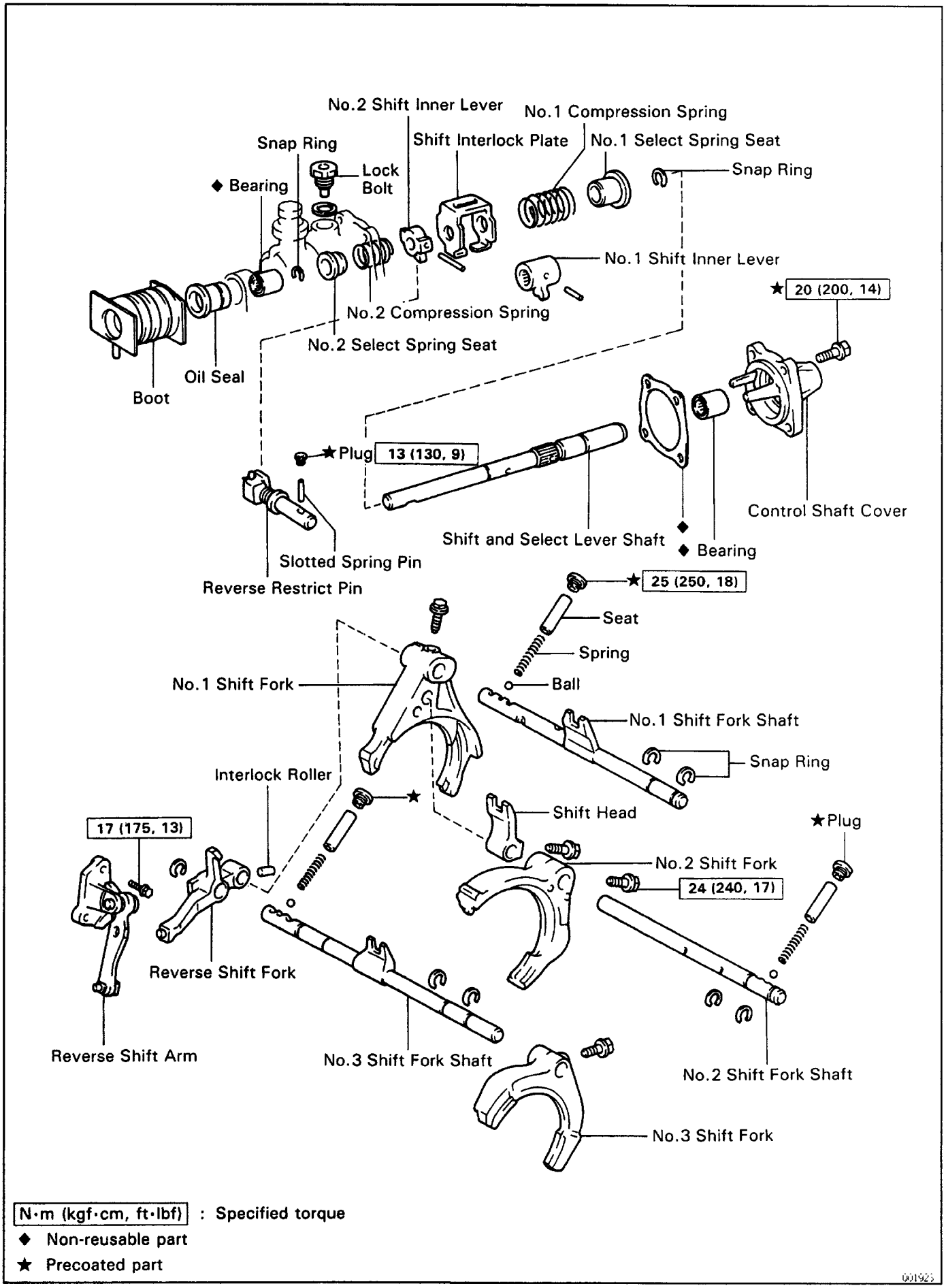

N·m (kgf·cm, ft·lbf) : Specified torque
◆ Non-reusable part
★ Precoated part

001925

MX04W–01

BASIC SUBASSEMBLY SEPARATION

(See pages MX2–20 to MX2–22)

1. REMOVE RELEASE FORK AND BEARING

2. REMOVE BACK–UP LIGHT SWITCH

Remove the back–up light switch.

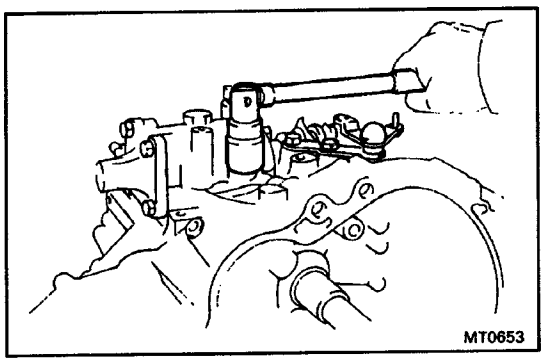

3. REMOVE VEHICLE SPEED PULSE GENERATOR

(a) Remove the set bolt and lock plate.

(b) Remove the vehicle speed pulse generator.

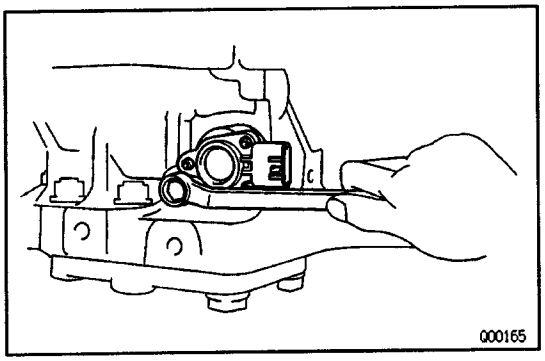

4. REMOVE SELECTING BELLCRANK ASSEMBLY

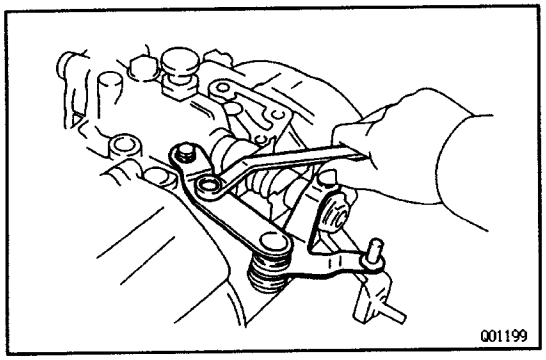

5. REMOVE SHIFT LEVER

(a) Remove the shift lever set nut.

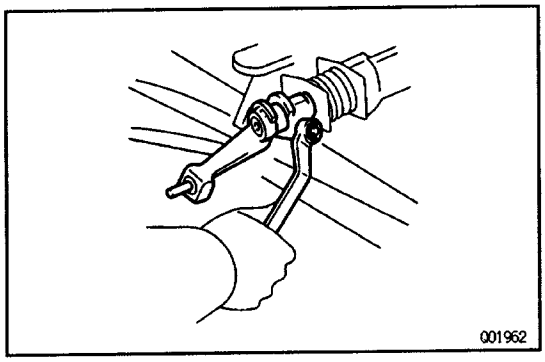

(b) Using a pin punch and hammer, tap out the lock pin.

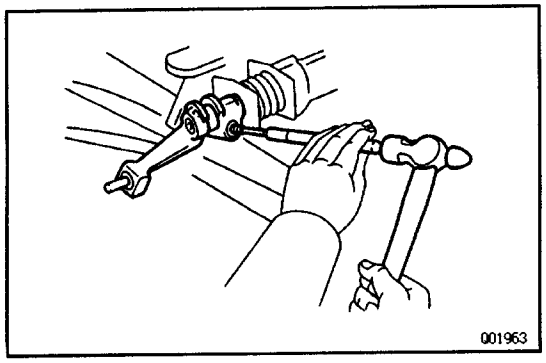

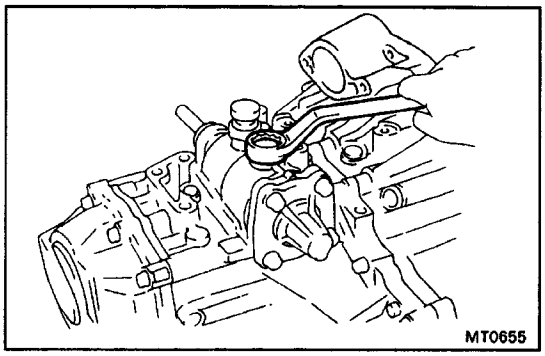

6. REMOVE LOCK BOLT

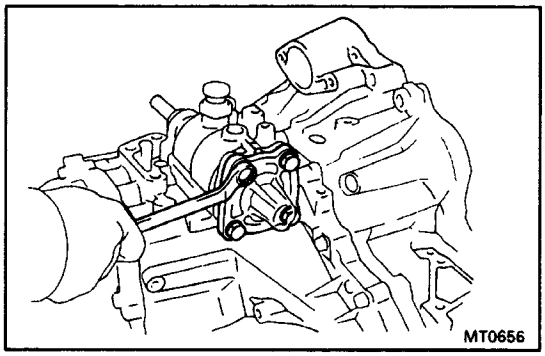

7. REMOVE CONTROL SHAFT COVER

Remove the four bolts holding the control shaft cover.

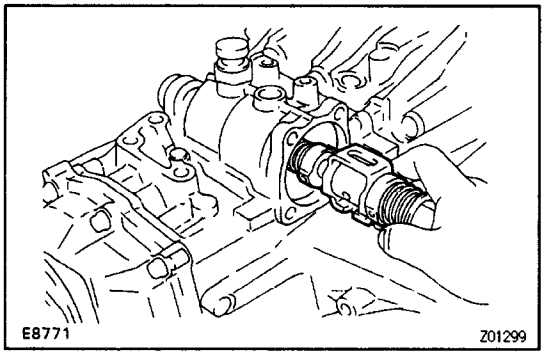

8. REMOVE SHIFT AND SELECT LEVER SHAFT ASSEMBLY

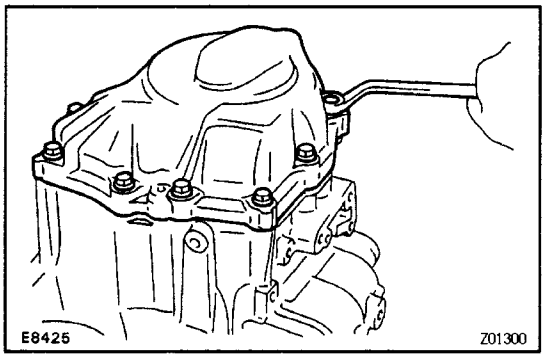

9. REMOVE TRANSMISSION CASE COVER

Remove the ten bolts and case cover.

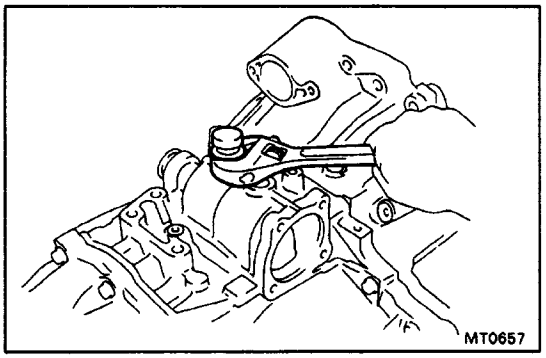

10. REMOVE BREATHER PLUG WITH GASKET

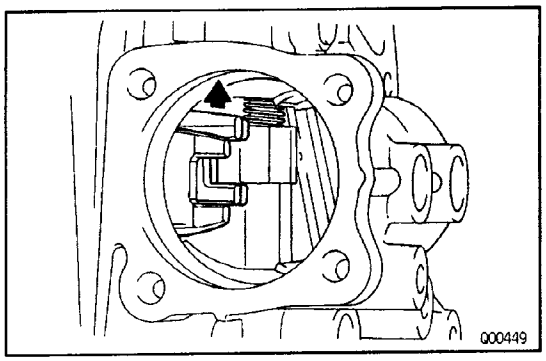

11. REMOVE LOCK NUT

(a) Unstake the lock nut.

(b) Engage the gear double meshing.

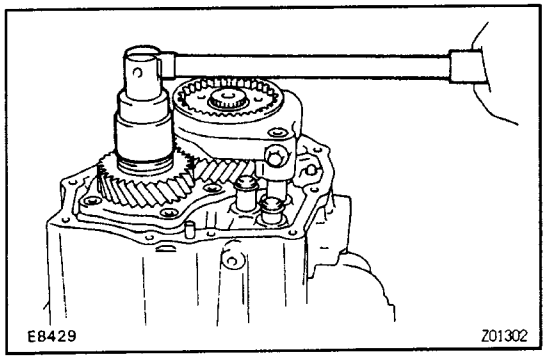

(c) Remove the lock nut.

(d) Disengage the gear double meshing.

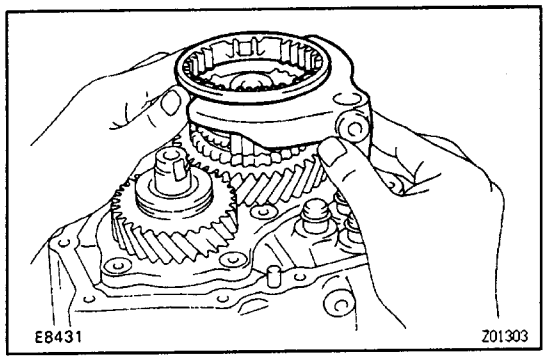

12. REMOVE NO. 3 HUB SLEEVE AND NO. 3 SHIFT FORK

(a) Remove the No.3 shift fork set bolt.

(b) Remove the No.3 hub sleeve and No.3 shift fork.

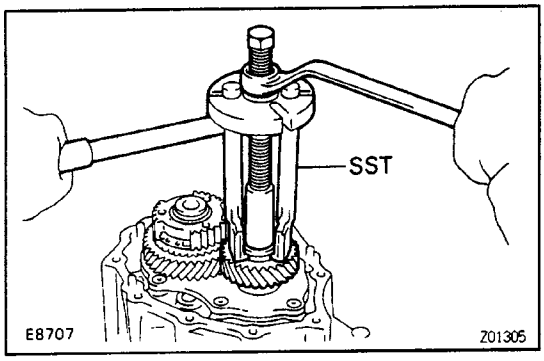

13. REMOVE FIFTH DRIVEN GEAR

Using SST, remove the 5th driven gear.

SST 09310–17010 (09310–07010, 09310–07020, 09310–07040, 09310–07050)

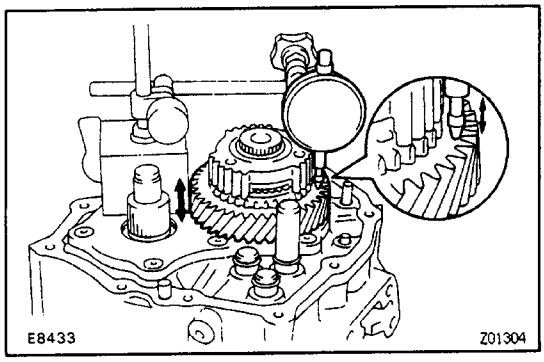

14. MEASURE FIFTH GEAR THRUST CLEARANCE AND OIL CLEARANCE

(a) Using a dial indicator, measure the thrust clearance.

Standard clearance:

0.10–0.57 mm (0.0039–0.0224 in.)

Maximum clearance:

0.65 mm (0.0256 in.)

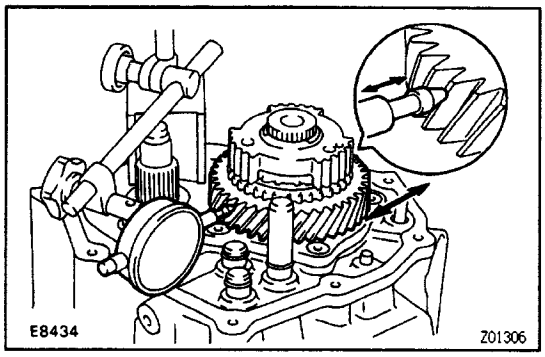

(b) Using a dial indicator, measure the oil clearance.

Standard clearance:
0.009–0.050 m m (0.0004–0.0020 in.)
Maximum clearance:
0.070 mm (0.0028 in.)

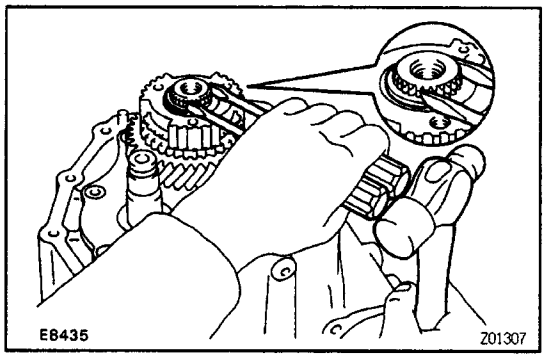

15. REMOVE NO.3 CLUTCH HUB AND FIFTH GEAR

(a) Using two screwdrivers and a hammer, tap out the snap ring.

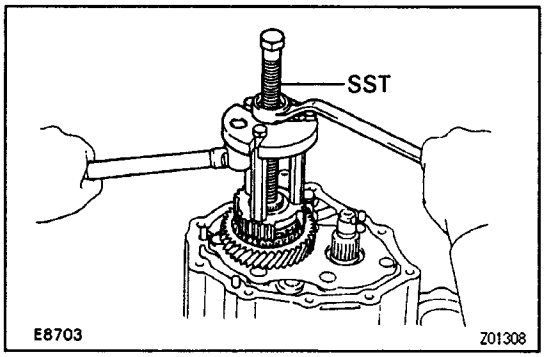

(b) Using SST, remove the No.3 clutch hub with synch–ronizer ring and 5th gear.
SST 09310–17010 (09310–07010, 09310–07020, 09310–07030, 09310–07050)

16. REMOVE NEEDLE ROLLER BEARING AND SPACER

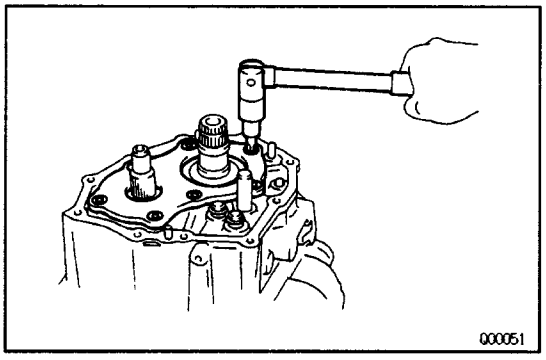

17. REMOVE REAR BEARING RETAINER

(a) Using a torx socket wrench, remove the seven torx screws and bearing retainer.
Torx wrench T45 09042–00050

(b) Remove the adjust shim.

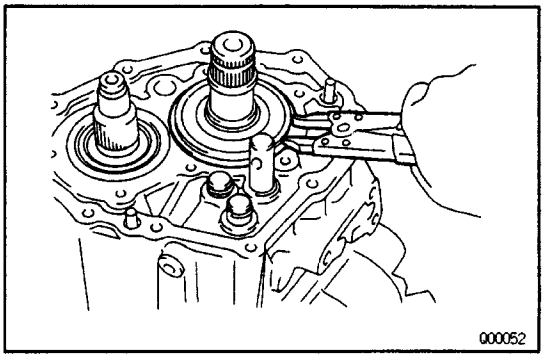

18. REMOVE SNAP RING

(a) Using a snap ring expander, remove the snap ring.

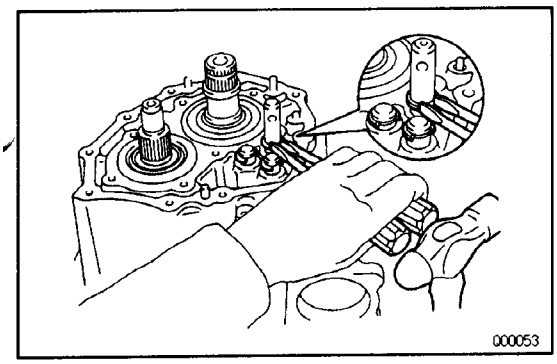

(b) Using two screwdrivers and a hammer, remove the three snap rings.

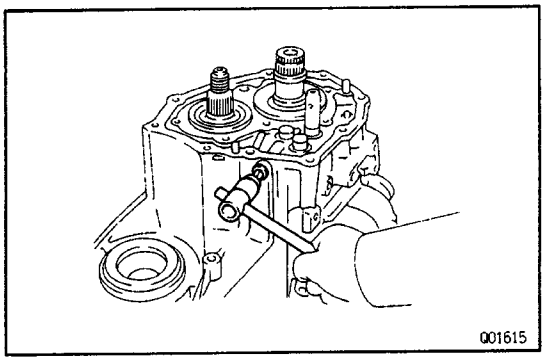

19. REMOVE PLUG, SEAT, SPRING AND LOCKING BALL

(a) Using a hexagon wrench (6 mm), remove the plug.
(b) Using a magnetic finger, remove the seat, spring and locking ball.

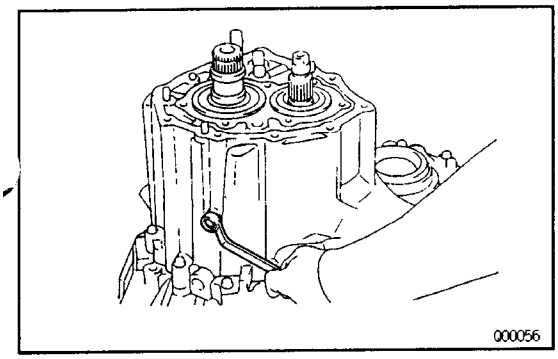

20. REMOVE REVERSE IDLER GEAR SHAFT RETAINING BOLT

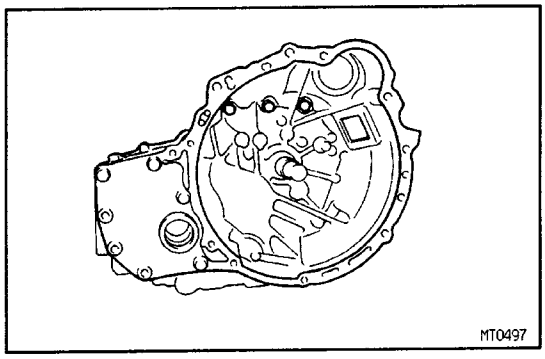

21. REMOVE TRANSMISSION CASE

(a) Remove the three bolts from transaxle case side.

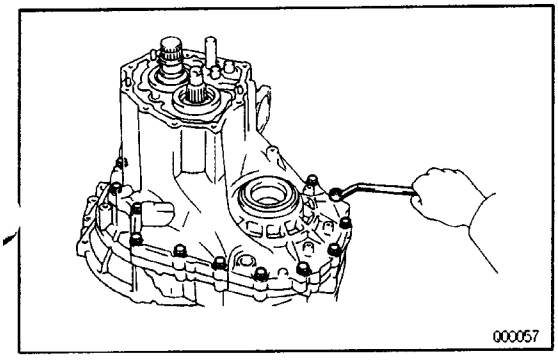

(b) Remove the fourteen bolts from the transmission case side and tap off the case with a plastic hammer.

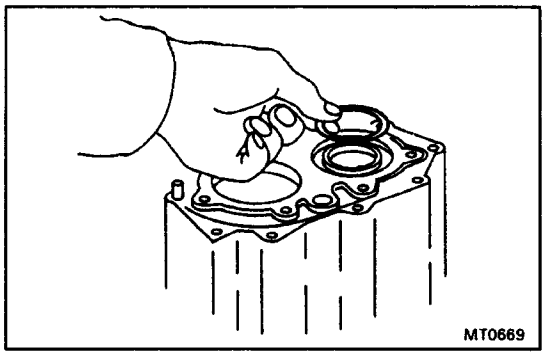

22. REMOVE OUTPUT SHAFT REAR TAPERED ROLLER BEARING OUTER RACE

(a) Remove the shim.

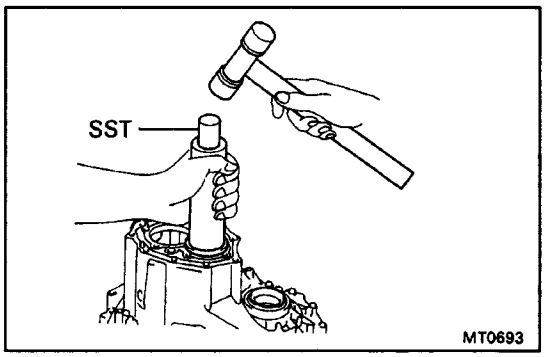

(b) Using SST and a hammer, remove the output shaft rear tapered roller bearing outer race.
SST 09316–60010 (09316–00010)

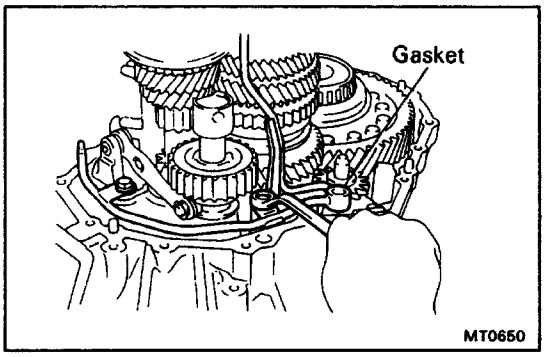

23. REMOVE NO.2 OIL PIPE

(a) Remove the gasket.
(b) Remove the two bolts and oil pipe.

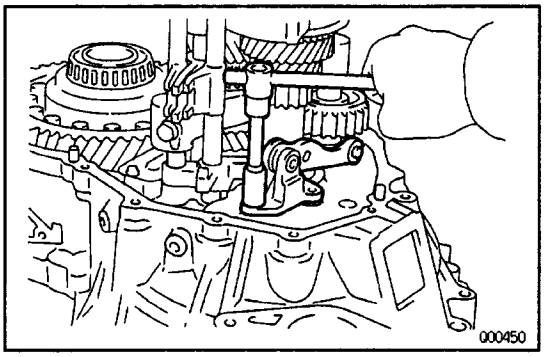

24. REMOVE REVERSE SHIFT ARM BRACKET

Remove the bolt and pull off the bracket.

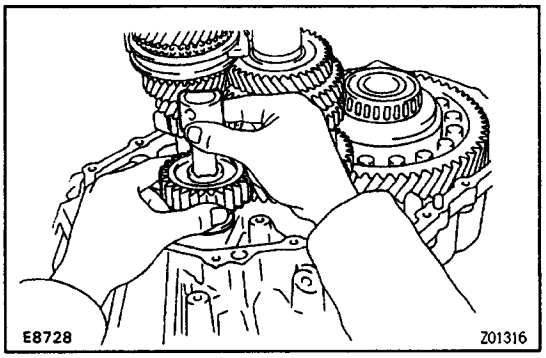

25. REMOVE REVERSE IDLER GEAR AND SHAFT

Pull out the shaft, remove the reverse idler gear.

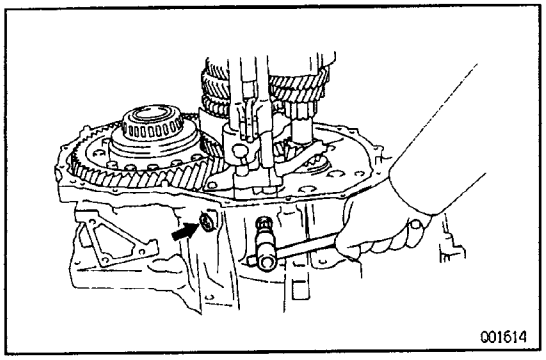

26. REMOVE STRAIGHT SCREW PLUGS, LOCKING BALLS AND SPRINGS

(a) Using a hexagon wrench (6 mm), remove the two plugs.

(b) Using a magnetic finger, remove the two spring seats, springs and balls.

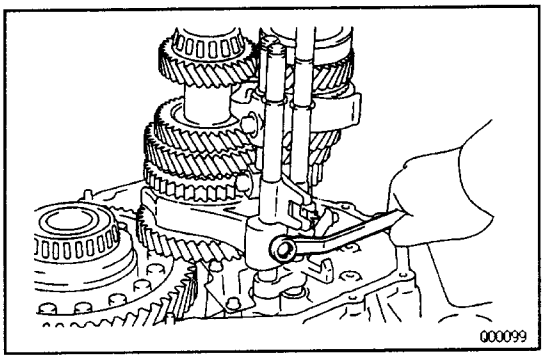

27. REMOVE THREE SET BOLTS

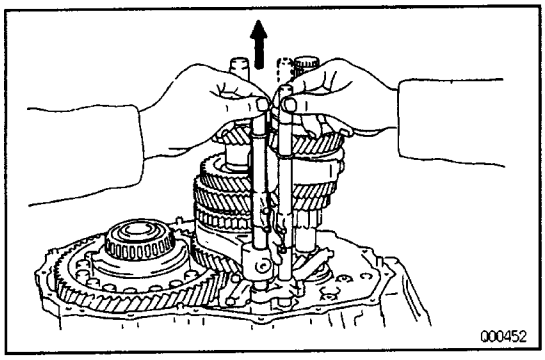

28. REMOVE No.1 SHIFT FORK SHAFT

Pull up No.3 shift fork shaft, remove the No.1 shift fork shaft.

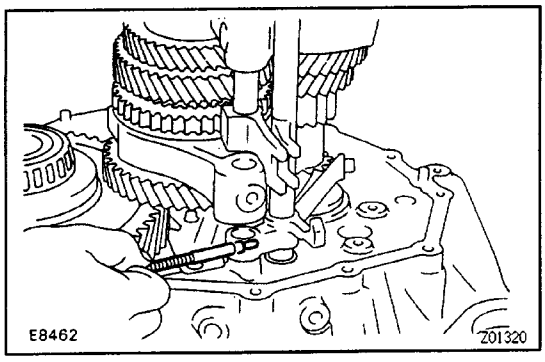

29. REMOVE INTERLOCK ROLLER

Using a magnetic finger, remove the interlock roller from the reverse shift fork.

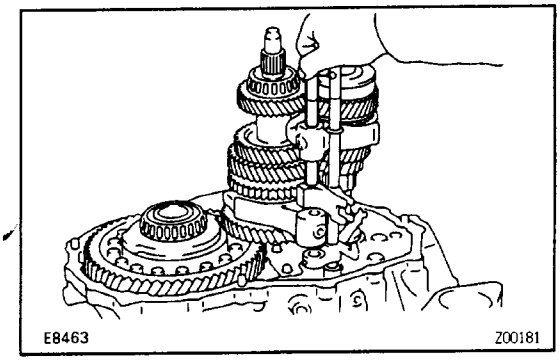

30. REMOVE NO.2 SHIFT FORK SHAFT, SHIFT HEAD AND NO.1 SHIFT FORK

(a) Pull out the No.2 shift fork shaft.

(b) Remove the shift head and No.1 shift fork.

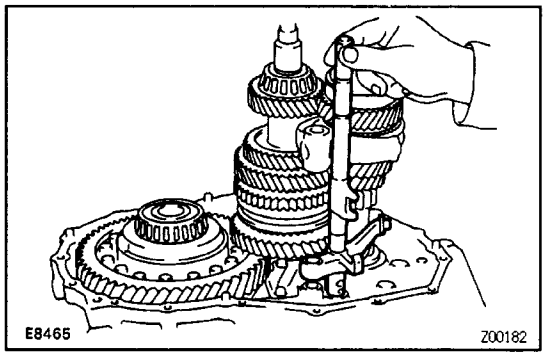

31. REMOVE NO.3 SHIFT FORK SHAFT WITH REVERSE SHIFT FORK AND NO.2 SHIFT FORK

(a) Pull out the No.3 shift fork shaft with reverse shift fork.

(b) Remove the No.2 shift fork.

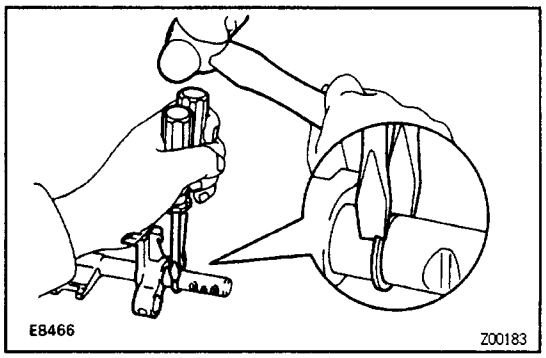

32. REMOVE SNAP RINGS

(a) Using two screwdrivers and a hammer, remove the snap ring and reverse shift fork from the No.3 shift fork shaft.

(b) Using two screwdrivers and a hammer, remove the snap rings from the No.1, No.2 and No.3 shift fork shafts.

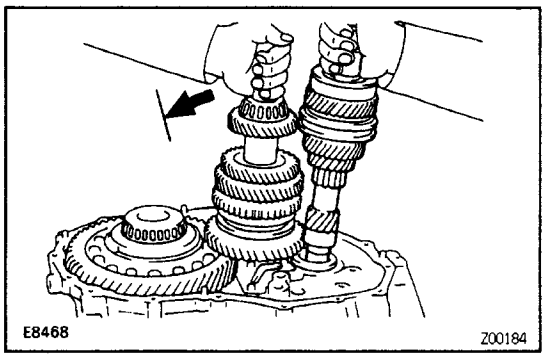

33. REMOVE INPUT AND OUTPUT SHAFT ASSEMBLY

(a) Leaning the output shaft to the differential side, remove the input shaft assembly.

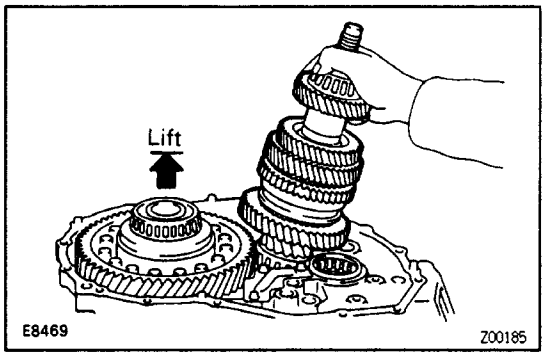

(b) Lift up the differential case assembly, remove the output shaft.

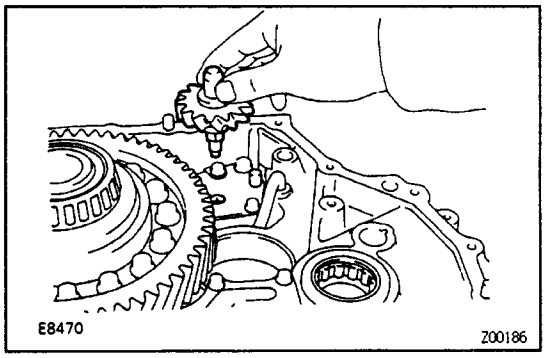

34. REMOVE DIFFERENTIAL ASSEMBLY

(a) Remove the oil pump drive gear.

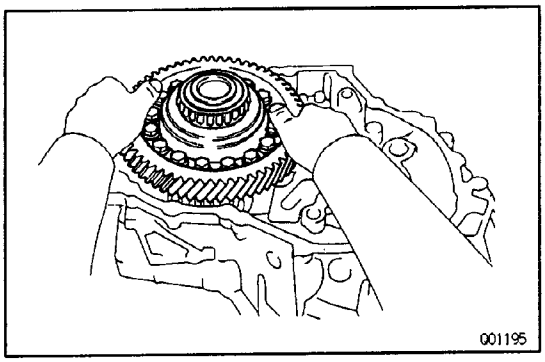

(b) Remove the differential case assembly.

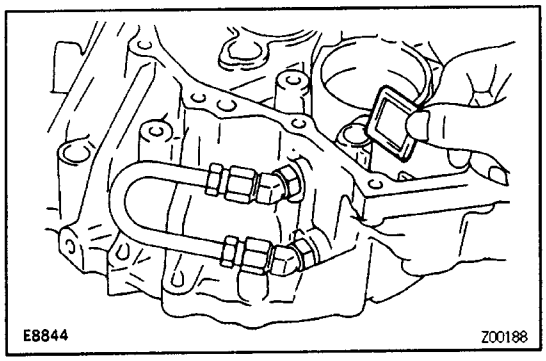

35. REMOVE MAGNET FROM TRANSAXLE CASE

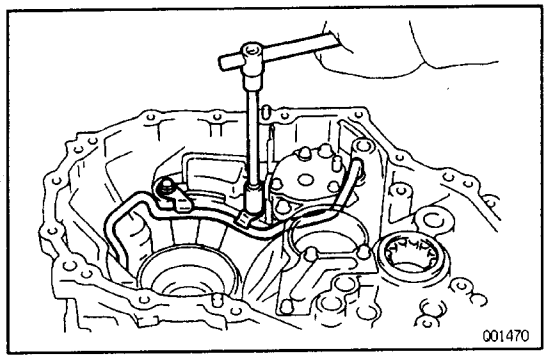

36. REMOVE OIL PUMP ASSEMBLY

(a) Remove the two bolts and oil pipe.

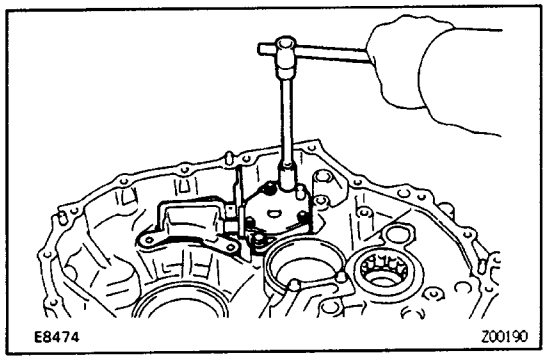

(b) Remove the two bolts and oil pump.

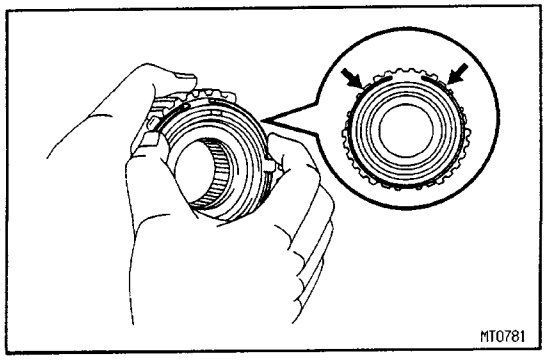

37. REMOVE NO.5 SYNCHRONIZER RING WITH KEY SPRING FROM NO.3 CLUTCH HUB

(a) Remove the No.5 synchronizer ring with key spring from No.3 clutch hub.

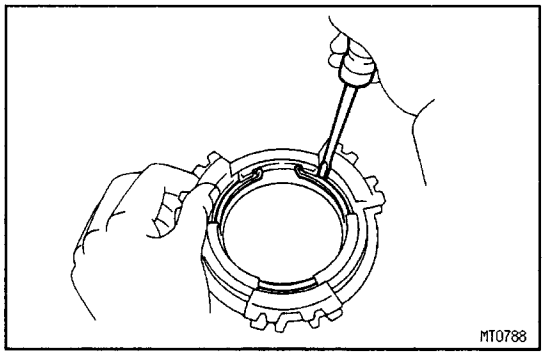

(b) Using a screwdriver, remove the snap ring.
HINT: Wrap vinyl tape on the screwdriver to prevent damaging the synchronizer ring.
(c) Remove the synchronizer rings.

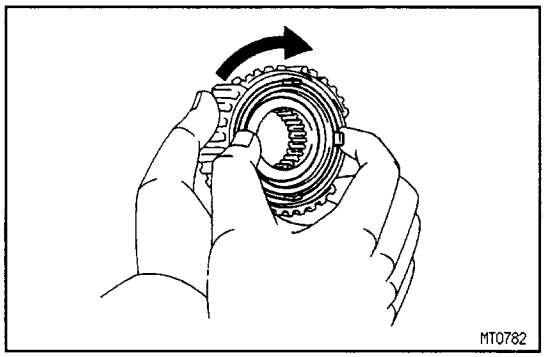

COMPONENT PARTS INSPECTION

MX04X–01

1. INSPECT NO.5 SYNCHRONIZER RINGS

(a) Check for wear or damage.
(b) Check the braking effect of the synchronizer ring.
Turn the middle No.5 synchronizer ring in one direction while pushing it to the outer No.5 synchronizer ring and check that the ring is locked.
If the braking effect is insufficient, replace the synchronizer ring.

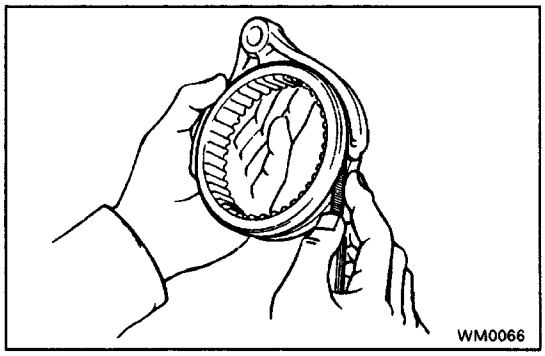

2. MEASURE CLEARANCE OF SHIFT FORKS AND HUB SLEEVE

Using a feeler gauge, measure the clearance between the hub sleeve and shift fork.

Maximum clearance:
1.0 mm (0.039 in.)

If the clearance exceeds the limit, replace the shift fork or hub sleeve.

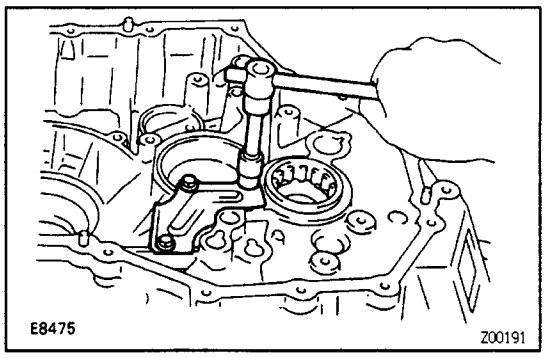

3. IF NECESSARY, REPLACE INPUT SHAFT BEARING AND OIL SEAL

(a) Remove the three bolts and transaxle case receiver.

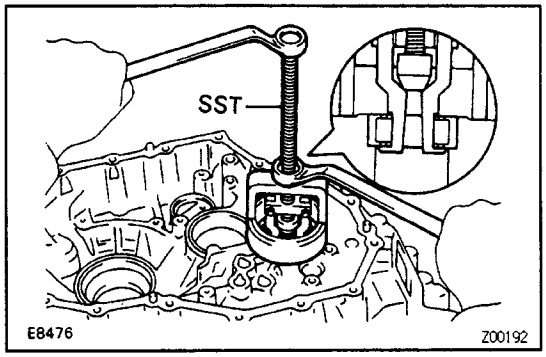

(b) Using SST, pull out the bearing.
SST 09612–65014

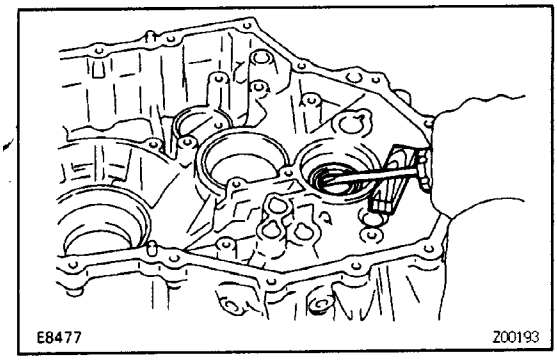

(c) Using a screwdriver, remove the oil seal.

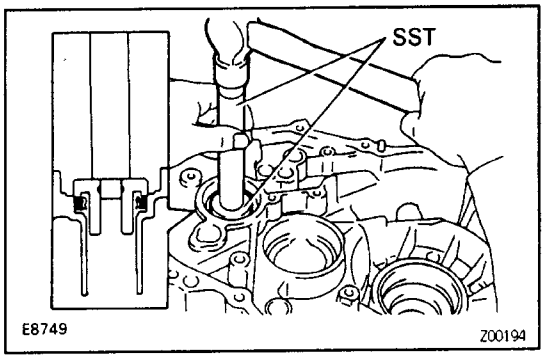

(d) Using SST, drive in a new oil seal.
SST 09608–12010 (09608–00020, 09608–00080)
(e) Coat the lip of seal with MP grease.

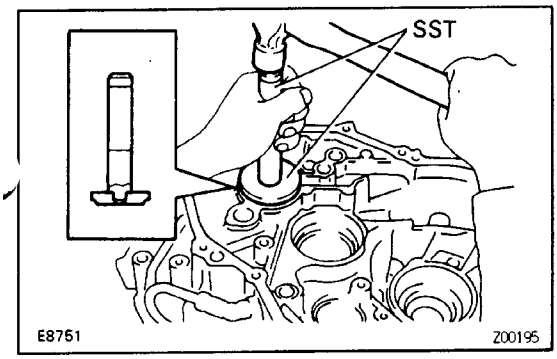

(f) Using SST, drive in a new bearing.
SST 09608–12010 (09608–00020, 09608–00060)

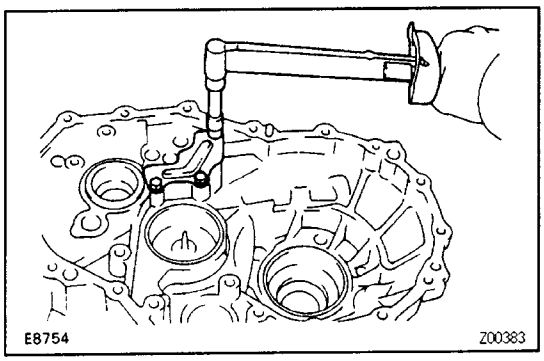

(g) Install the transaxle case receiver.
(h) Install and torque the three bolts.
Torque: 7.4 N–m (75 kgf–cm, 65 in.–lbf)

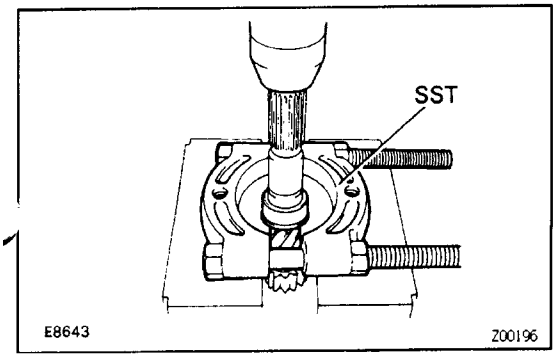

(i) Using SST and a press, remove the inner race.
SST 09950–00020

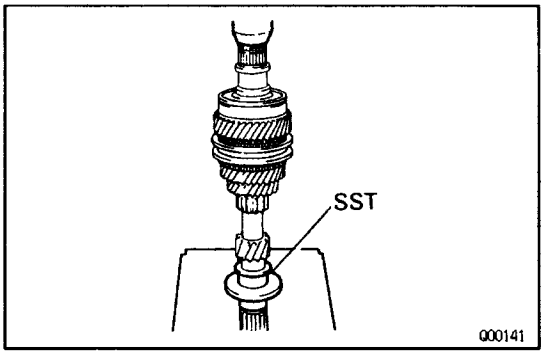

(j) Using SST and a press, install a new input shaft front bearing inner race.
SST 09316–60010 (09316–00020)

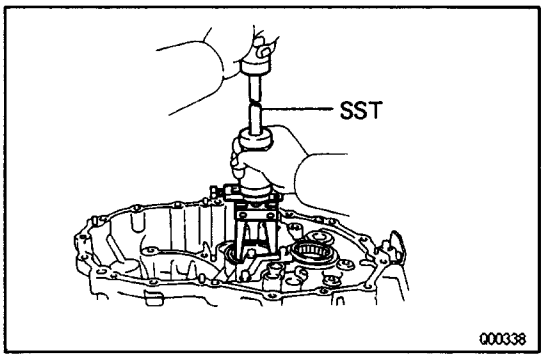

4. IF NECESSARY, REPLACE OUTPUT SHAFT FRONT BEARING AND OUTPUT SHAFT FRONT COVER

(a) Using SST, pull out the output shaft front bearing outer race.
SST 09308–00010

(b) Remove the output shaft front cover.

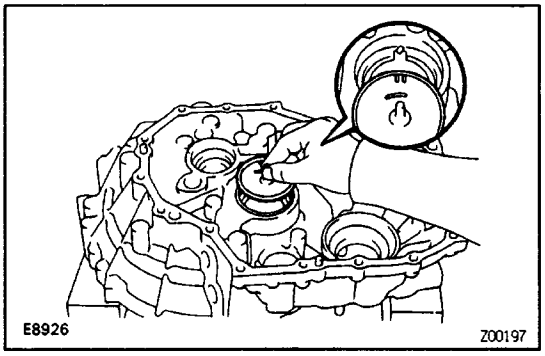

(c) Install a new output shaft front cover.
HINT: install the output shaft front cover projection into the case side groove.

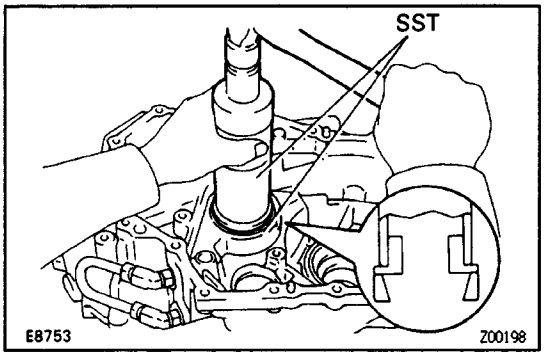

(d) Using SST and a hammer, drive in a new output shaft front bearing outer race.
SST 09316–60010 (09316–00010, 09316–00020)

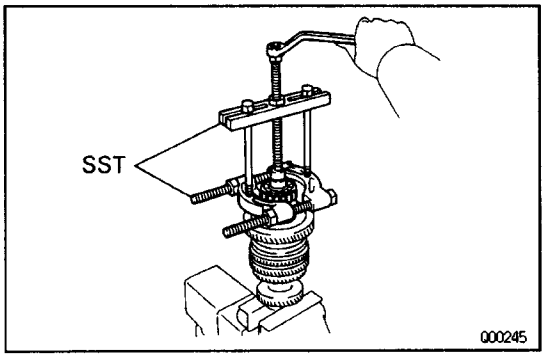

(e) Using SST and a socket wrench, remove the output shaft front bearing.
SST 09950–00020, 09950–00030

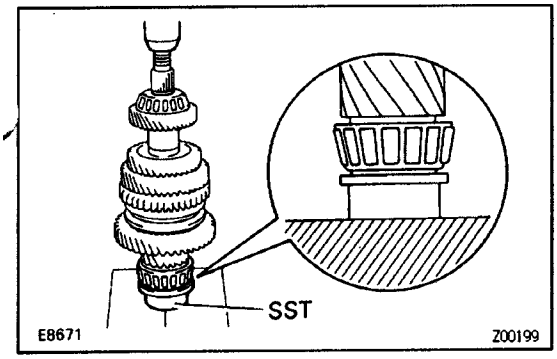

(f) Using SST and a press, install a new output shaft front bearing.
SST 09316–60010 (09316–00070)

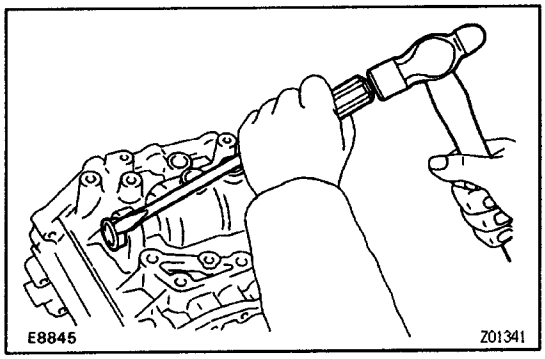

5. IF NECESSARY, REPLACE SHIFT CONTROL SHAFT OIL SEAL

(a) Using a screwdriver and hammer, remove the oil seal.

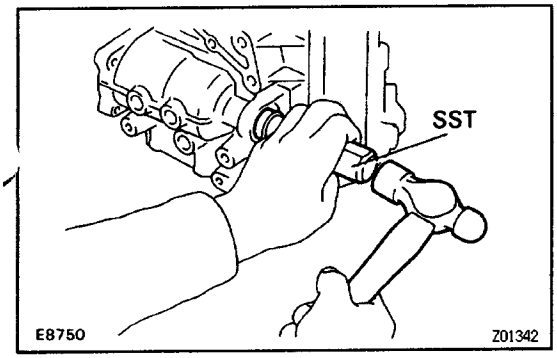

(b) Using SST, drive in the new oil seal until it touches the bottom.
SST 09517–36010

(c) Coat the lip of oil seal with MP grease.

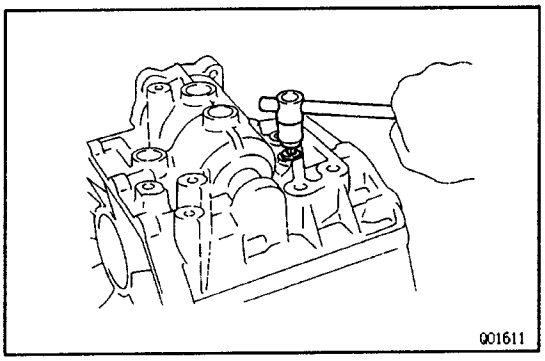

6. IF NECESSARY, REPLACE REVERSE RESTRICT PIN

(a) Using a hexagon wrench (6 mm), remove the screw plug.

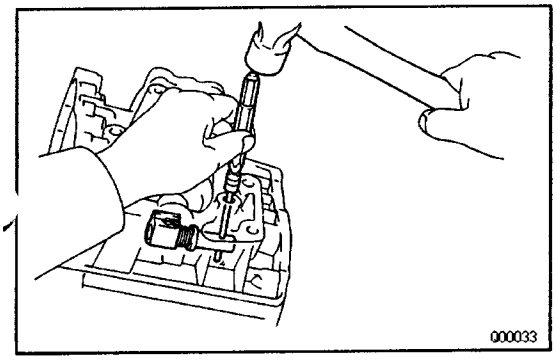

(b) Using a pin punch and hammer, drive out the slotted spring pin.

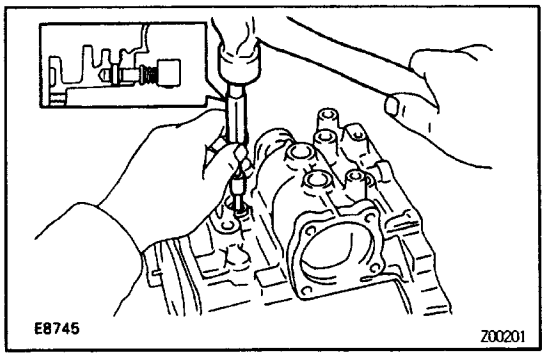

(c) Replace the reverse restrict pin.
(d) Using a pin punch, drive in the slotted spring pin.

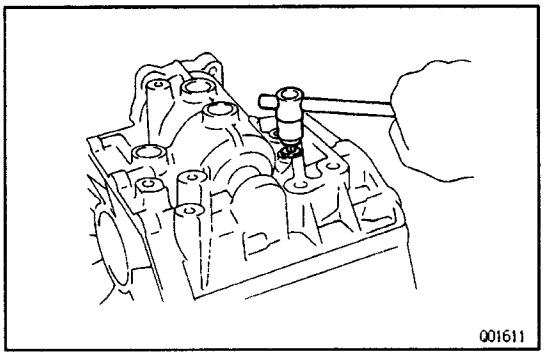

(e) Apply sealant to the screw plug threads.
Sealant:
Part No. 08833–00080, THREE BOND 1344, LOC–TITE 242 or equivalent
(f) Using a hexagon wrench (6 mm), install the screw plug.

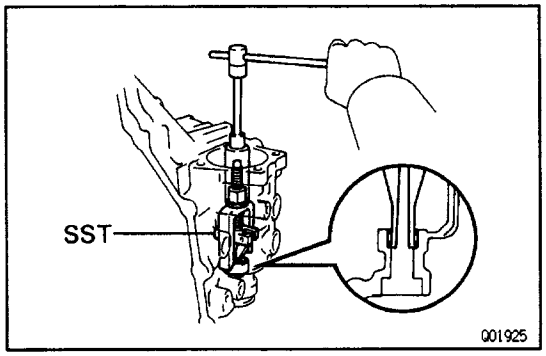

7. IF NECESSARY, REPLACE CONTROL SHAFT FRONT BEARING
(a) Using SST, remove the needle roller bearing from the transmission case.
SST 09319–60020

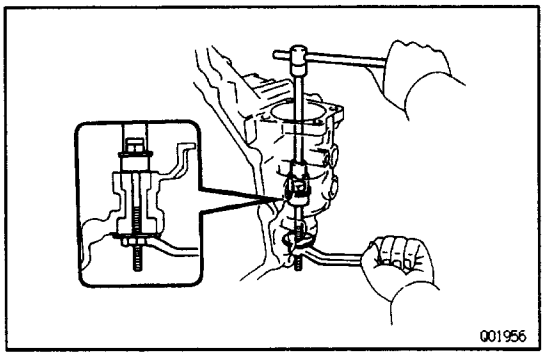

(b) Using a suitable bolt, nut and two washers, install a new needle roller bearing to the transmission case.

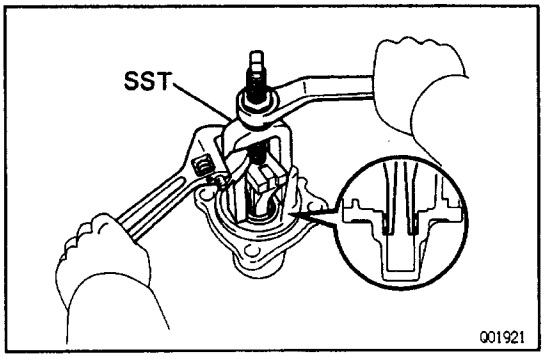

8. IF NECESSARY, REPLACE CONTROL SHAFT REAR BEARING
(a) Using SST, remove the needle roller bearing from the control shaft cover.
SST 09319–60020

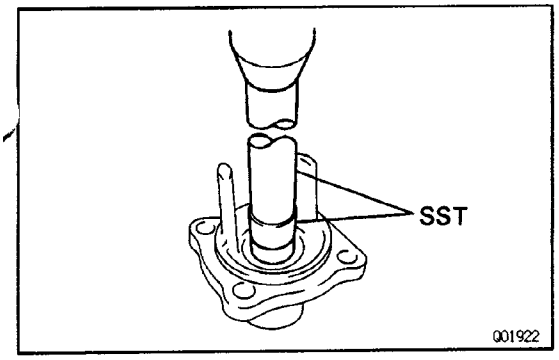

(b) Using SST and a press, press in a new needle roller bearing to the control shaft cover.
SST 09620–30010 (09631–00020),
09630–24013 (09620–24010)

E153 MANUAL TRANSAXLE

DESCRIPTION

MX01Q–01

PRECAUTIONS

When working with FIPG materials, you must be observe the following.

- **Using a razor blade and gasket scraper, remove all the old sealant (FIPG) material from the gasket surfaces.**
- **Thoroughly clean all components to remove all the loose material.**
- **Clean both sealing surfaces with a non–residue solvent.**
- **Apply the seal packing in approx. 1 mm (0.04 in.) bead along the sealing surface.**
- **Part must be assembled within 10 minutes of application. Otherwise, the sealant (FIPG) material must be removed and reapplied.**

MX01R–02

DESCRIPTION

- **The gear and shaft layout is the same as the E153 manual transaxle.**
- **A triple–cone type synchromesh mechanism is used in the second gear and a double–cone type synchromesh mechanism is used in the third gear to improve the shift feeling char–acteristics. This helps to reduce the shifting effort, provide smoothly shifting.**
- **A reverse synchromesh mechanism is used to suppress gear engagement noise in reverse gear shifting while providing smoothly shifting.**

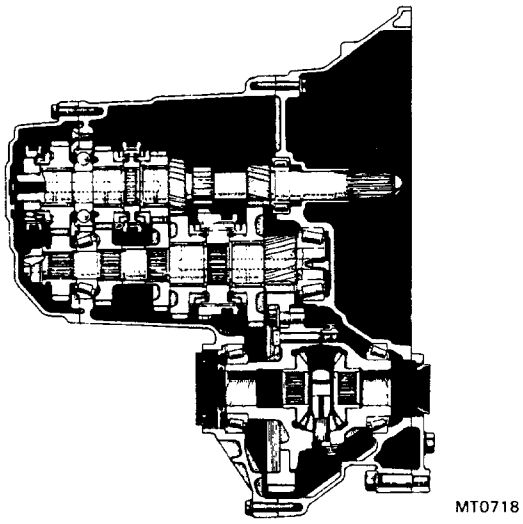

MT0718

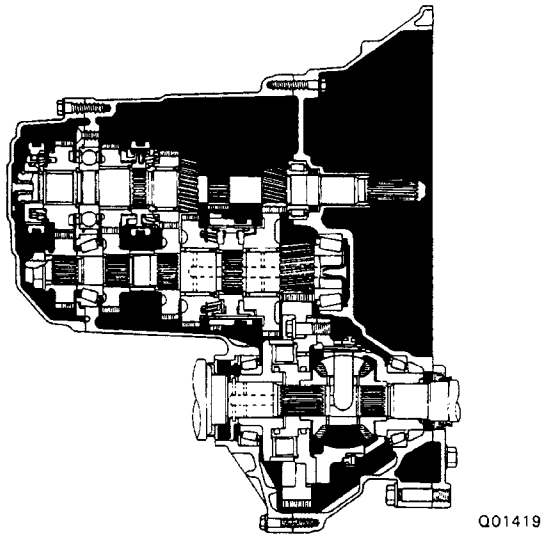

Q01419

(w/Viscous Coupling LSD)

Type of Transaxle		E1–53
Type of Engine		3S–GTE
Gear Ratio	1 st 2nd 3rd 4th 5th Reverse	3.230 1.913 1.258 0.918 0.731 3.545
Differential Gear Ratio		4.285
Oil Capacity	Standard	4.2 liters (4.4 US qts, 3.6 Imp. qts)
	Viscous Coupling LSD	3.9 liters (4.1 US qts, 3.4 Imp. qts)
Oil Viscosity		SAE 75W–90 or 80W–90
Oil Grade		API GL–3, GL–4 or GL–5

Z02500

DIFFERENTIAL CASE (Viscous Coupling LSD Type)

MX01K–03

COMPONENTS

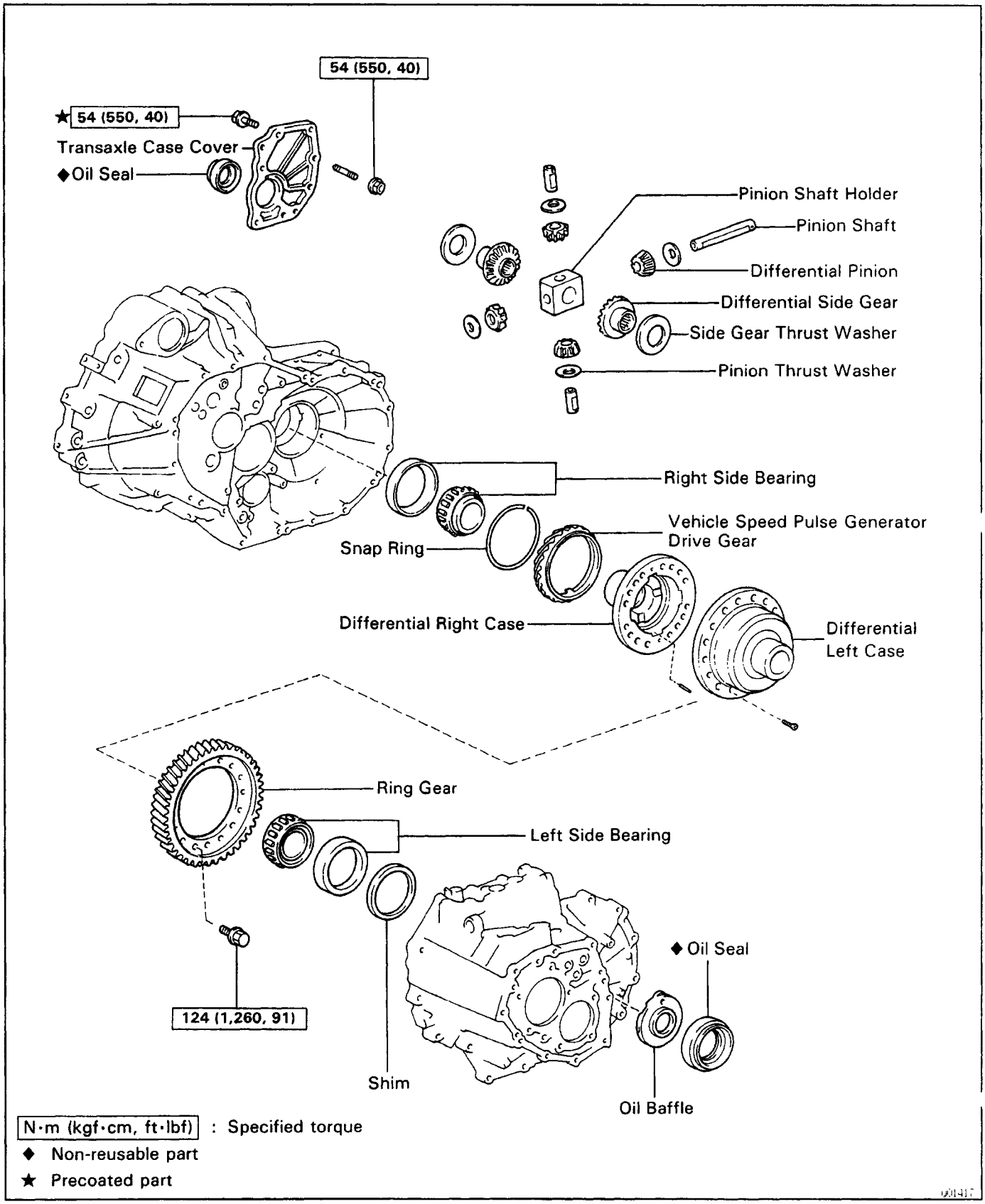

N·m (kgf·cm, ft·lbf) : Specified torque
◆ Non-reusable part
★ Precoated part

DIFFERENTIAL CASE DISASSEMBLY

MX050–01

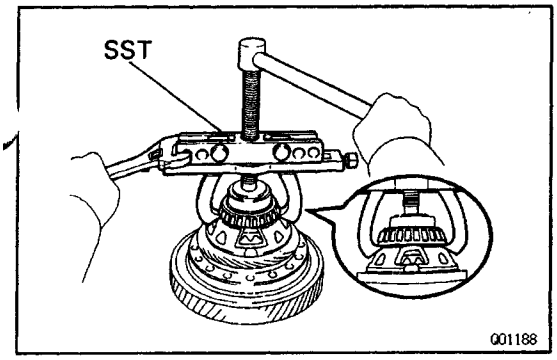

1. REMOVE SIDE BEARING

(a) Using SST, remove the RH side bearing.
SST 09950–20017

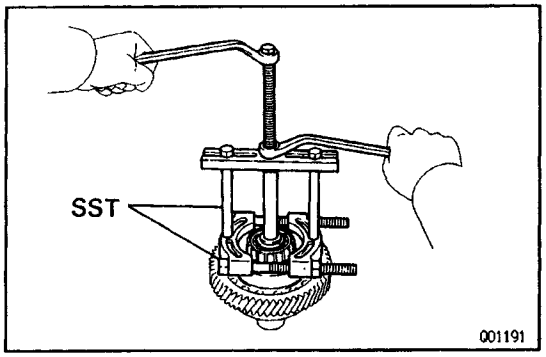

(b) Using SST, remove the LH side bearing.
SST 09950–00020, 09950–00030

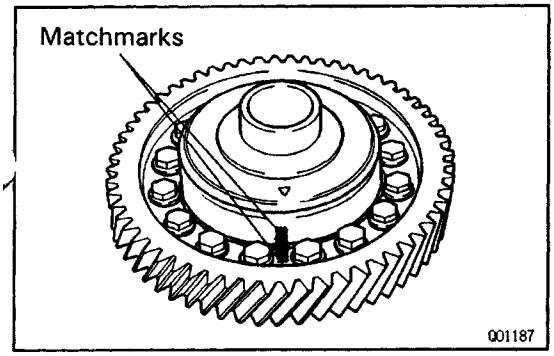

2. REMOVE RING GEAR

(a) Place the matchmarks on both the differential case and ring gear.

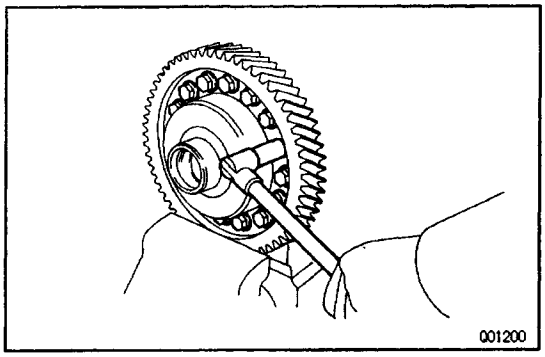

(b) Remove the sixteen bolts.

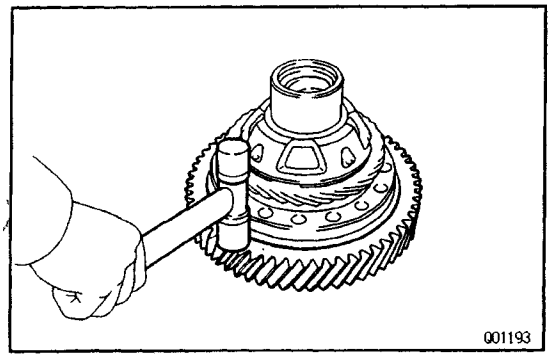

(c) Using a plastic hammer, tap out the ring gear.

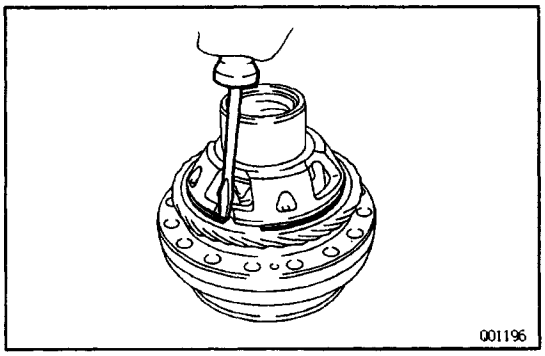

3. REMOVE VEHICLE SPEED PULSE GENERATOR DRIVE GEAR

(a) Using a screwdriver, remove the snap ring.

(b) Remove the vehicle speed pulse generator drive gear.

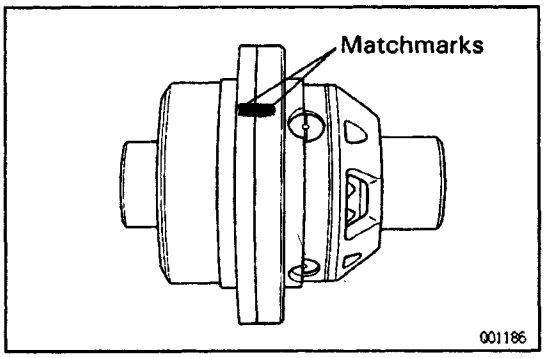

4. DISASSEMBLE DIFFERENTIAL CASE

(a) Place the matchmarks on the differential right and left case.

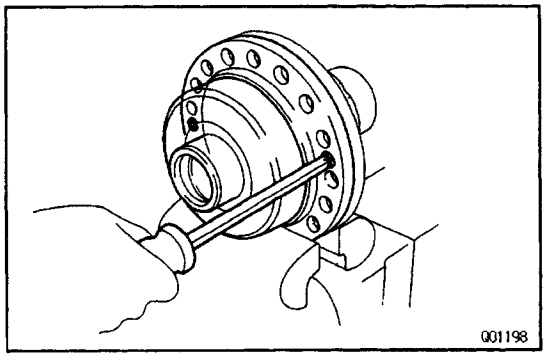

(b) Remove the two screws.

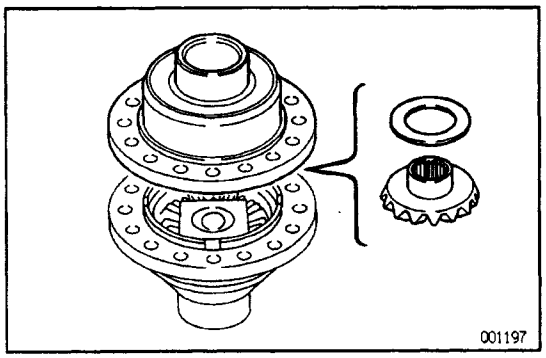

(c) Disassemble the differential case, side gear and thrust washer.

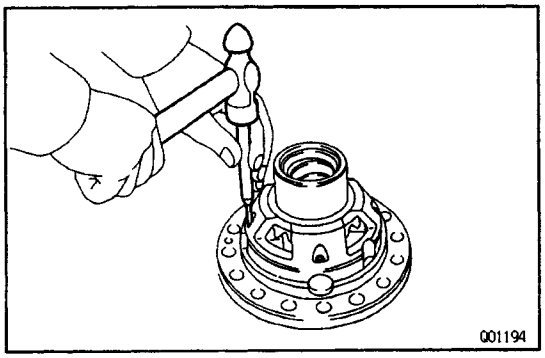

(d) Using a pin punch, drive out the three slotted spring pin.

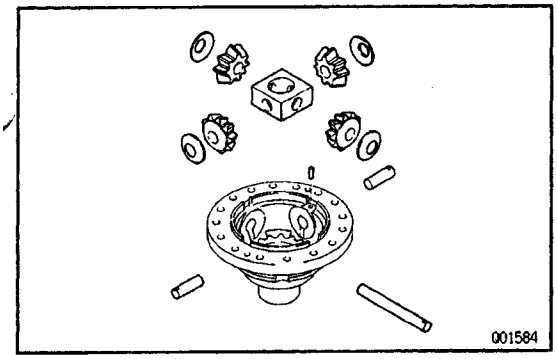

(e) Remove the three pinion shafts, four pinion gears, four pinion washer s and shaft holder.

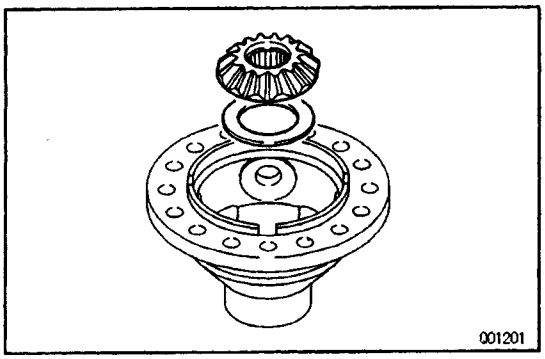

(f) Remove the side gear and thrust washer from the differential right case.

5. (Transmission Case Side)
IF NECESSARY, REPLACE OIL SEAL AND TAPER ROLLER BERING OUTER RACE

(a) Using a screwdriver, remove the oil seal.
(b) Remove the transmission oil baffle.

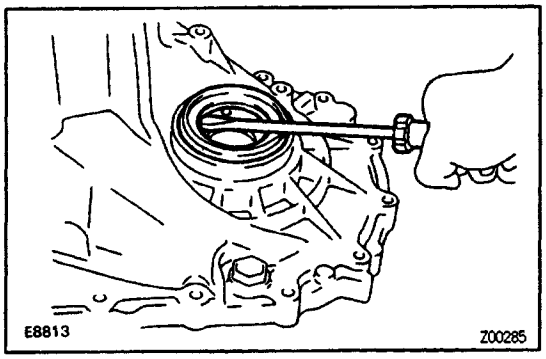

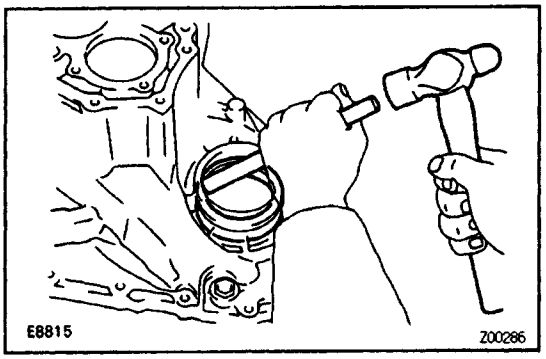

(c) Using a brass bar and hammer, drive out the bearing outer race lightly and evenly.
(d) Remove the shim.

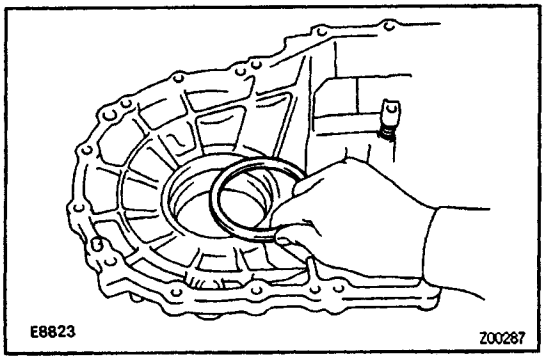

(e) Install the shim.
(See page MX2–72)
HINT: First select and install a shim of lesser thickness than before.

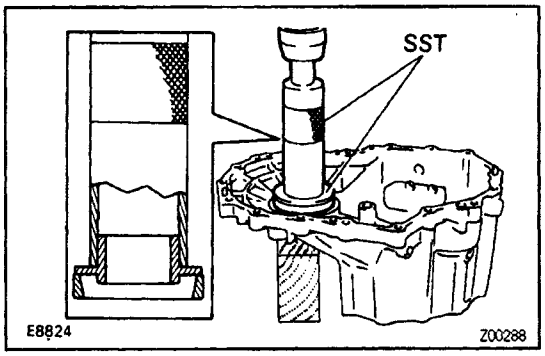

(f) Using SST and a press, install the taper roller bearing outer race.
SST 09316–60010 (09316–00010, 09316–00040)

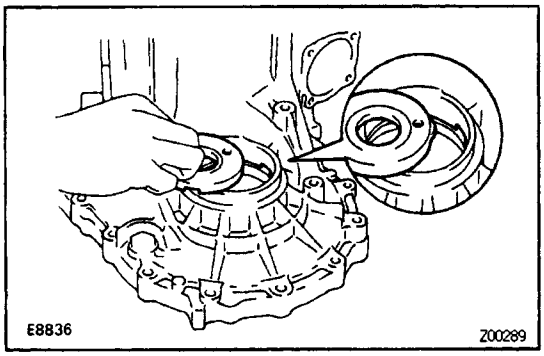

(g) Install the transmission oil baffle.
HINT: Install the transmission oil baffle prohection into the case side cutout.

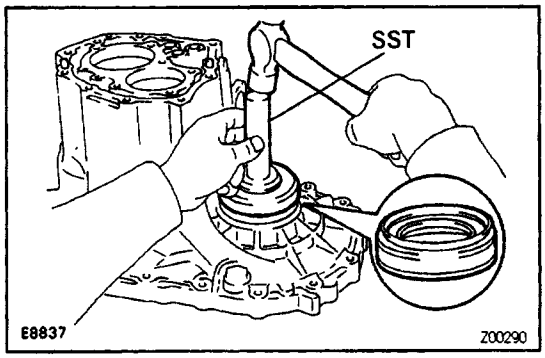

(h) Using SST and a hammer, drive in a new oil seal.
SST 09223–15010
(i) Coat the lip of oil seal with MP grease.

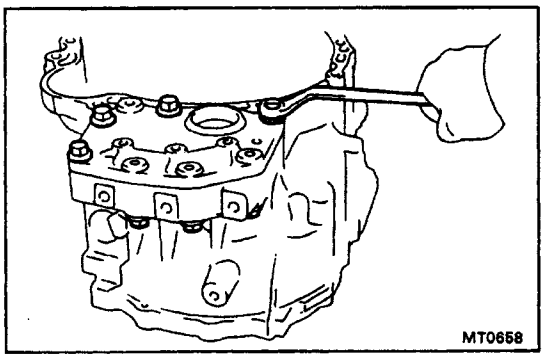

6. (Transaxle Cse Side)
IF NECESSARY, REPLACE OIL SEAL AND TAPE ROLLER BEARING OUTER RACE
(a) Remove the four bolts and three nuts.

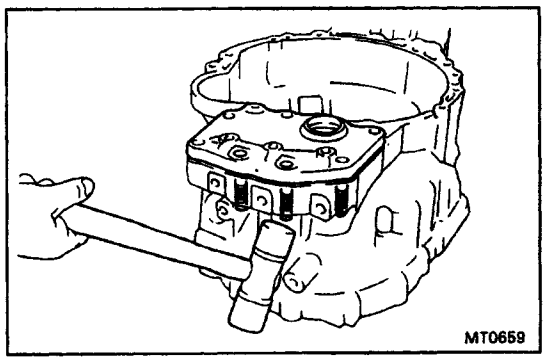

(b) Using a plastic hammer, tap the stud bolts and remove the transaxle case cover.

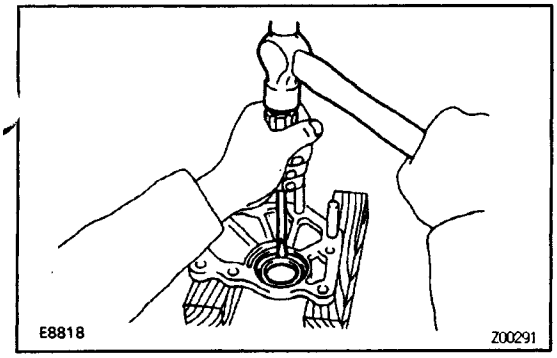

(c) Using a screwdriver and hammer, drive out the oil seal.

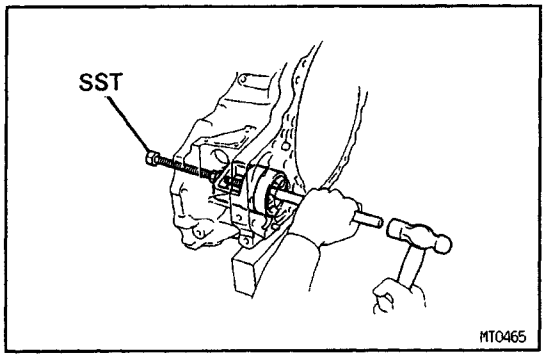

(d) Using SST, brass bar and hammer, remove the taper roller bearing outer race.
SST 09612–65014

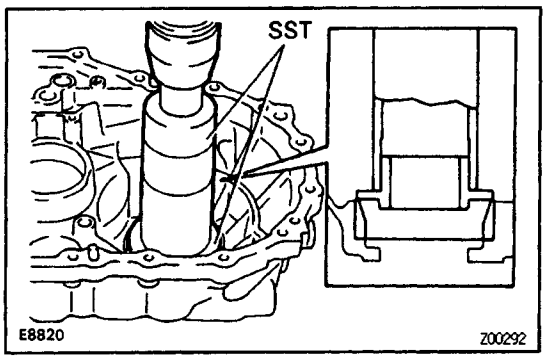

(e) Using SST and a hammer, install the taper roller bea–ring.
SST 09316–60010 (09316–00010, 09316–00040)

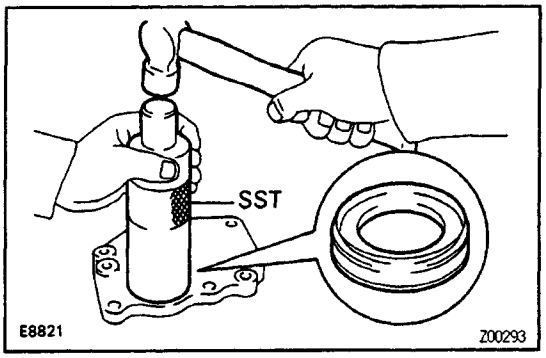

(f) Using SST and a hammer, drive in a new oil seal.
SST 09316–60010 (09316–00010)

(g) Coat the lip of oil seal with MP grease.

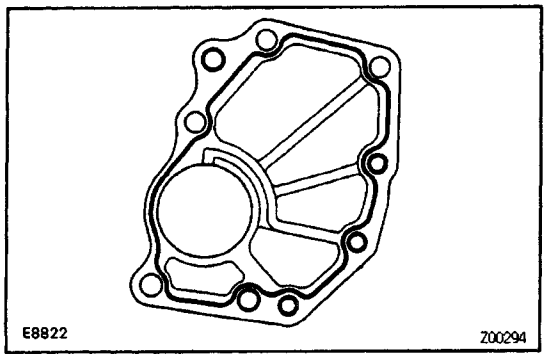

(h) Remove any packing material and be careful not to drop oil on the contacting surfaces of the transaxle case or case cover.

(i) Apply seal packing to the transaxle case cover as shown in the figure.

Seal packing: Part No. 08826–00090, THREE BOND 1281 or equivalent

HINT: Install the transaxle case cover as shown as the seal packing is applied.

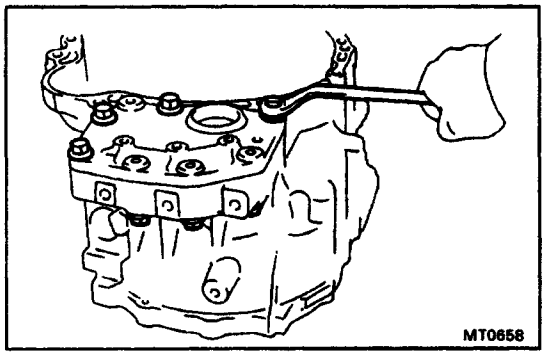

(j) Apply sealant to the bolt threads.

Sealant:

Part No.08833–00080. THREE BOND 1344, LOC–TITE 242 or equivalent

(k) Install and torque the four bolts and three nut.

Torque: 54 N–m (550 kgf.cm, 40 ft.lbf)

MX051–01

DIFFERENTIAL CASE ASSEMBLY

(See page MX2–72).

1. ASSEMBLE DIFFERENTIAL CASE

HINT: Coat all of the sliding and rotating surface with gear oil before assembly.

(a) Install the thrust washer and differential side gear to the differential right case.

(b) Install the three pinion shafts, four pinions, four pinion washers and shaft holder.

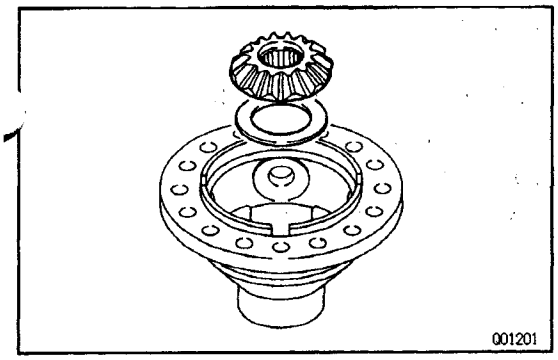

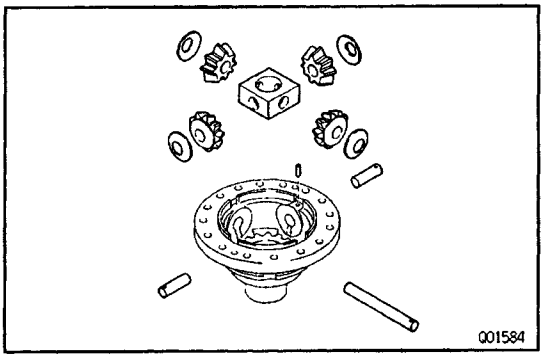

(c) Using a pin punch, drive in the three slotted spring pin to the differential right case.

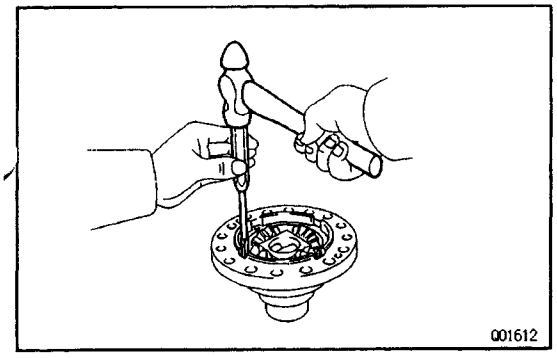

(d) Using a dial indicator, measure the backlash of one pinion gear while holding the No.2 differential case.

Standard backlash:

0.05–0.20 mm (0.0020–0.0079 in.)

HINT: Push the pinion gear of the left side of the differential case.

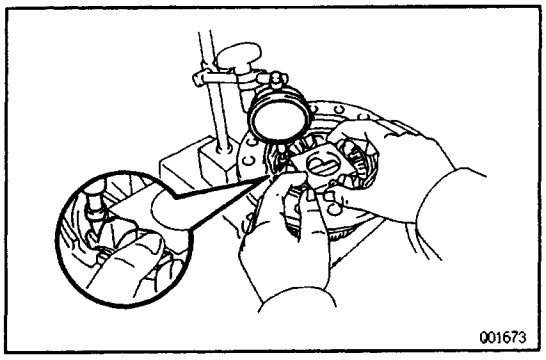

(e) Install the side gear, pinion shafts and shaft holder with four pinions to the right side of the differential case.

And check the side gear backlash.

(f) Referring to the table below, select the thrust washer which will ensure that the backlash is within specifi–cation. Try to select a washer of the same size.

Thickness mm (in.)	Thickness mm (in.)
0.80 (0.0315)	1.20 (0.0472)
0.90 (0.0354)	1.30 (0.0512)
1.00 (0.0394)	1.40 (0.0551)
1.10 (0.0433)	

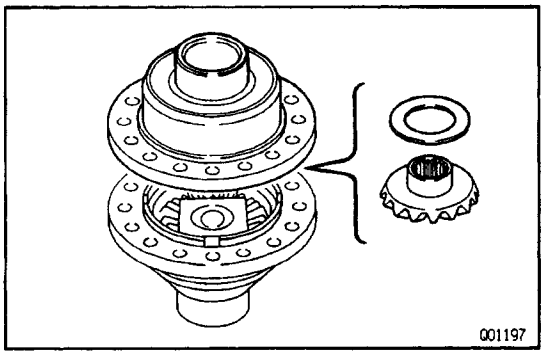

(g) Assemble the differential case, side gear and thrust washer.

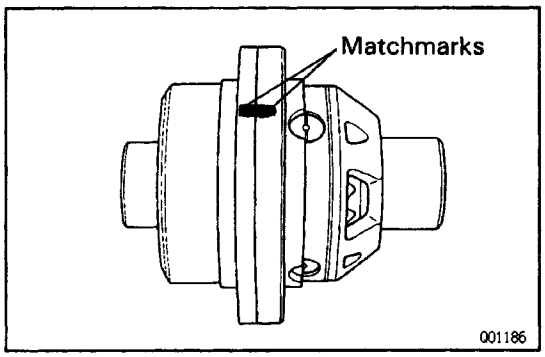

(h) Align the matchmarks on the differential cases.

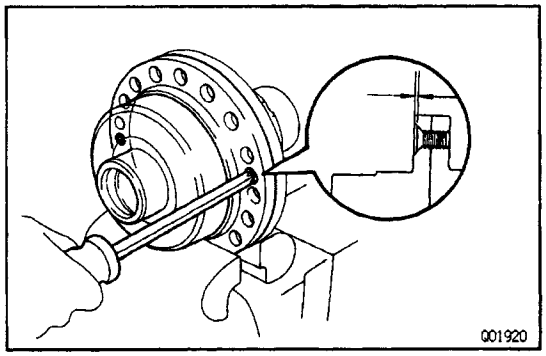

(i) Install and tighten the two screws.

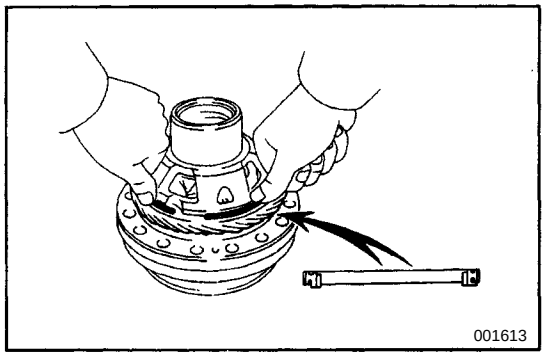

2. INSTALL VEHICLE SPEED PULSE GENERATOR DRIVE GEAR

(a) Install the vehicle speed pulse generator drive gear to the differential right case.
(b) install the snap ring.

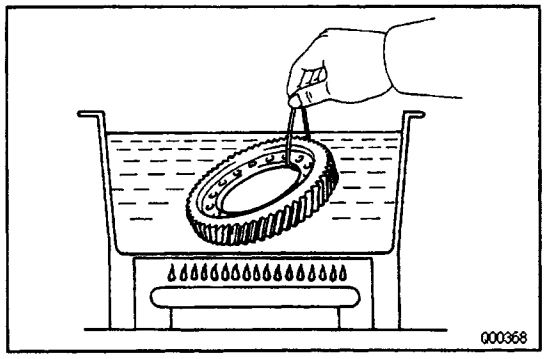

3. INSTALL RING GEAR

(a) Clean the contact surface of the differential case and the threads of the ring gear and differential case.
(b) Heat the ring gear in boiling water.
(c) After the moisture on the ring gear has completely evaporated, quickly install the ring gear to the differ–ential case.

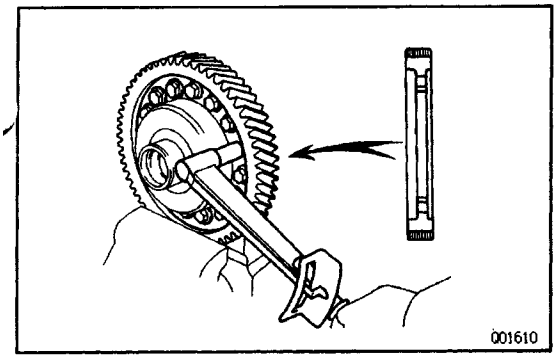

HINT: Align the matchmarks on the differential left case and contact the ring gear.

(d) Temporarily install the sixteen bolts.

NOTICE: The ring gear set bolts should not be tightened until the ring gear has cooled sufficiently.

(e) After the ring gear has cooled sufficiently, torque the ring gear set bolts.

Torque: 124 N–m (1,260 kgf–cm, 91 ft–lbf)

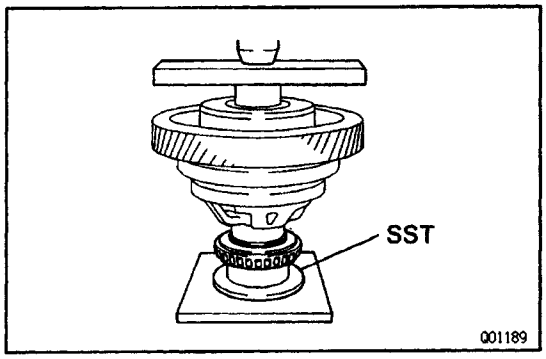

4. INSTALL SIDE BEARING

(a) Using SST and a press, install the RH side bearing.
SST 09316–20011

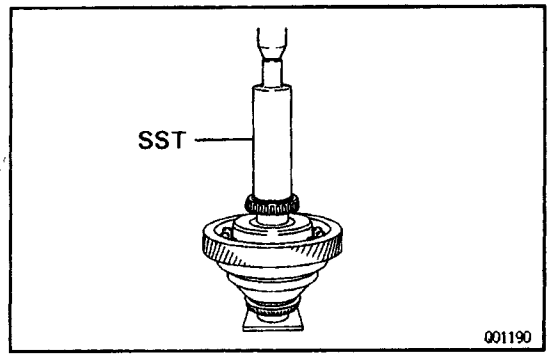

(b) Using SST and a press, install the LH side bearing.
SST 09316–60010 (09316–00010)

5. ADJUST OUTPUT SHAFT ASSEMBLY PRELOAD

(See page MX2–85 **to** MX2–87**)**

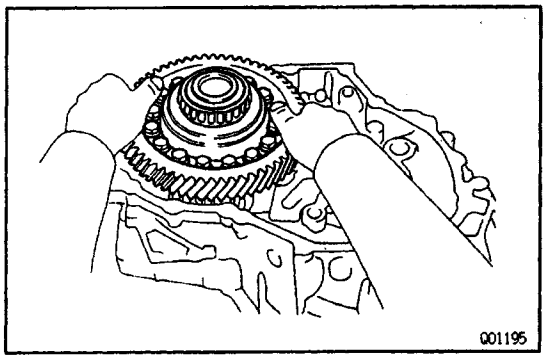

6. INSTALL DIFFERENTIAL CASE ASSEMBLY

Install the differential case assembly to the transaxle case.

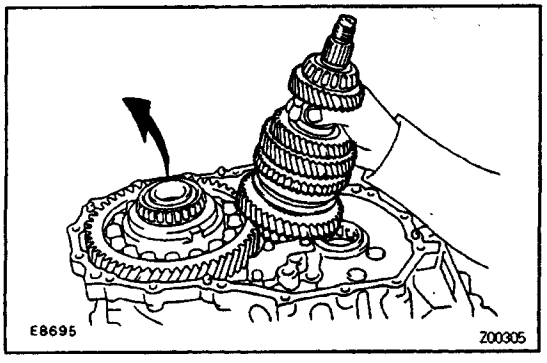

7. INSTALL OUTPUT SHAFT ASSEMBLY

Lift up the differential case, install the input shaft assembly.

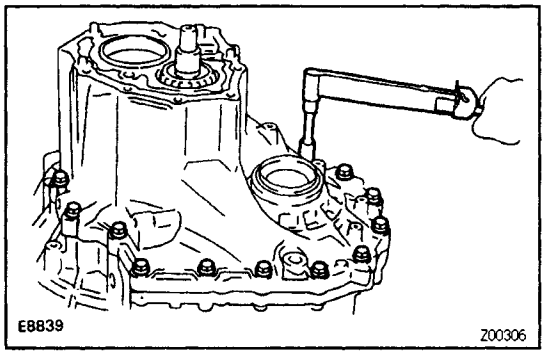

8. INSTALL TRANSMISSION CASE

(a) Install the transmission case.

HINT: If necessary, tap on the case with a plastic hammer.

(b) Install and torque the seventeen bolts.

Torque: 29 N–m (300 kgf–cm, 22 ft–lbf)

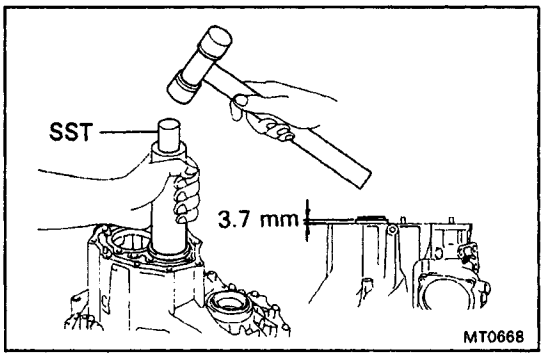

9. INSTALL OUTPUT SHAFT REAR TAPERED ROLLER BEARING OUTER RACE

Using SST and a hammer, install the output shaft rear tapered roller bearing outer race.

SST 09316–60010 (09316–00010)

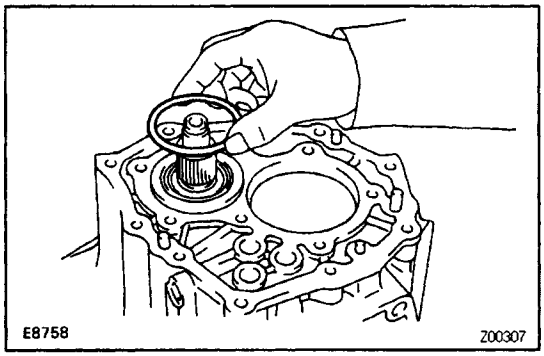

10. INSTALL SHIM

(See page MX2–85 **to** MX2–87**)**

HINT: Install the previously selected shim.

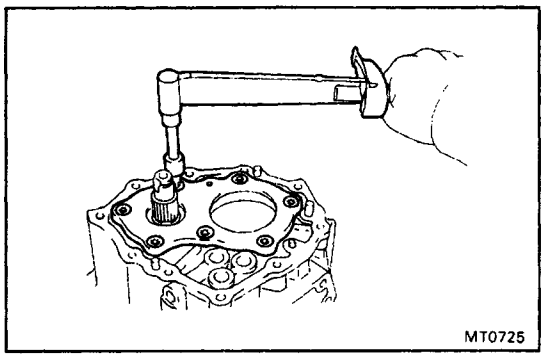

11. INSTALL REAR BEARING RETAINER

Using a torx wrench, install and torque the seven torx screws.

Torx wrench T45 09042–00050

Torque: 42.N.m (430 kgf–cm, 31 ft–lbf)

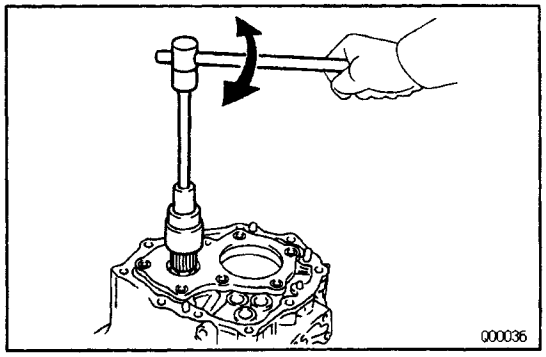

12. ADJUST DIFFERENTIAL CASE SIDE BEARING PRELOAD

(a) Install the new lock nut to the output shaft.

(b) Turn the output shaft right and left two or three times to allow the bearings to settle.

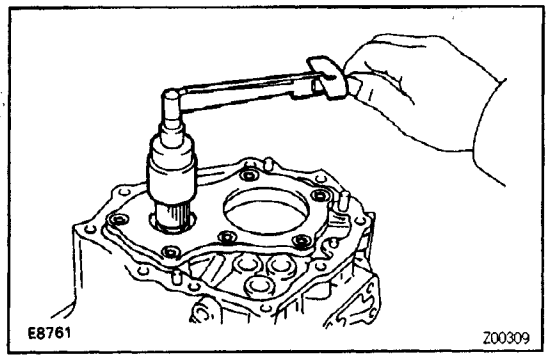

(c) Using a small torque wrench, measure the preload.

Preload (at starting):

New bearing (Add output shaft preload)

0.2–0.4 N–m (2.0–4.1 kgf–cm, 1.7–3.6 in.–lbf)

Reused bearing (Add output shaft preload)

0.1–0.2 N–m (1.3–2.5 kgf–cm, 1.1–2.2 in.–lbf)

If the preload is not within specification, select the thrust washers.

HINT: The total preload will change about 0.1–0.2 N–m (1–2 kgf–cm, 0.9–1.7 ft–lbf) with each shire thickness.

Mark	Thickness mm (in.)	Mark	Thickness mm (in.)
0	2.00 (0.0787)	9	2.45 (0.0965)
1	2.05 (0.0807)	A	2.50 (0.0984)
2	2.10 (0.0827)	B	2.55 (0.1004)
3	2.15 (0.0846)	C	2.60 (0.1024)
4	2.20 (0.0866)	D	2.65 (0.1043)
5	2.25 (0.0886)	E	2.70 (0.1063)
6	2.30 (0.0906)	F	2.75 (0.1083)
7	2.35 (0.0925)	G	2.80 (0.1102)
8	2.40 (0.0945)	H	2.85 (0–1122)

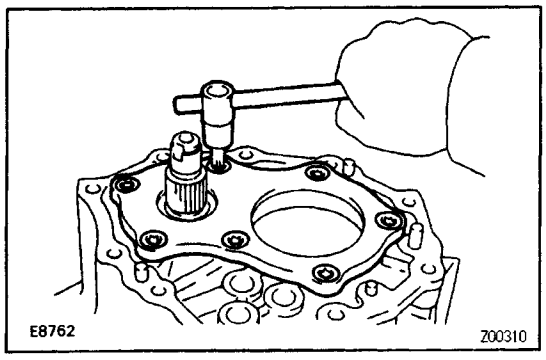

13. REMOVE REAR BEARING RETAINER

Using torx wrench, remove the seven torx screws and rear bearing retainer.

Torx wrench T45 09042–00050

14. REMOVE SHIM

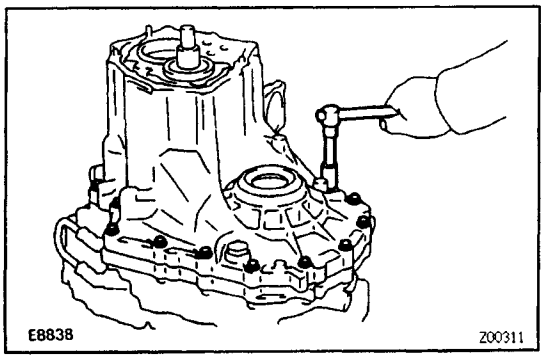

15. REMOVE TRANSMISSION CASE

(a) Remove the seventeen bolts.

(b) Using a plastic hammer, tap off the transmission case.

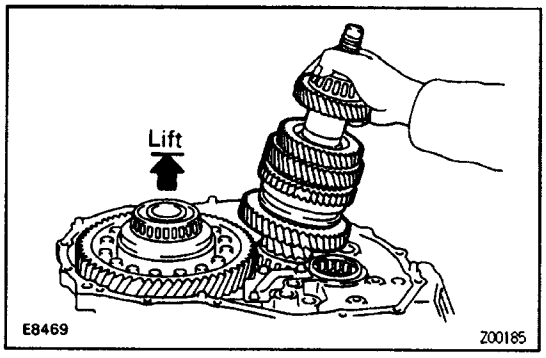

16. REMOVE OUTPUT SHAFT ASSEMBLY

17. REMOVE DIFFERENTIAL CASE ASSEMBLY

DIFFERENTIAL CASE (Standard Type)

MX01K–02

COMPONENTS

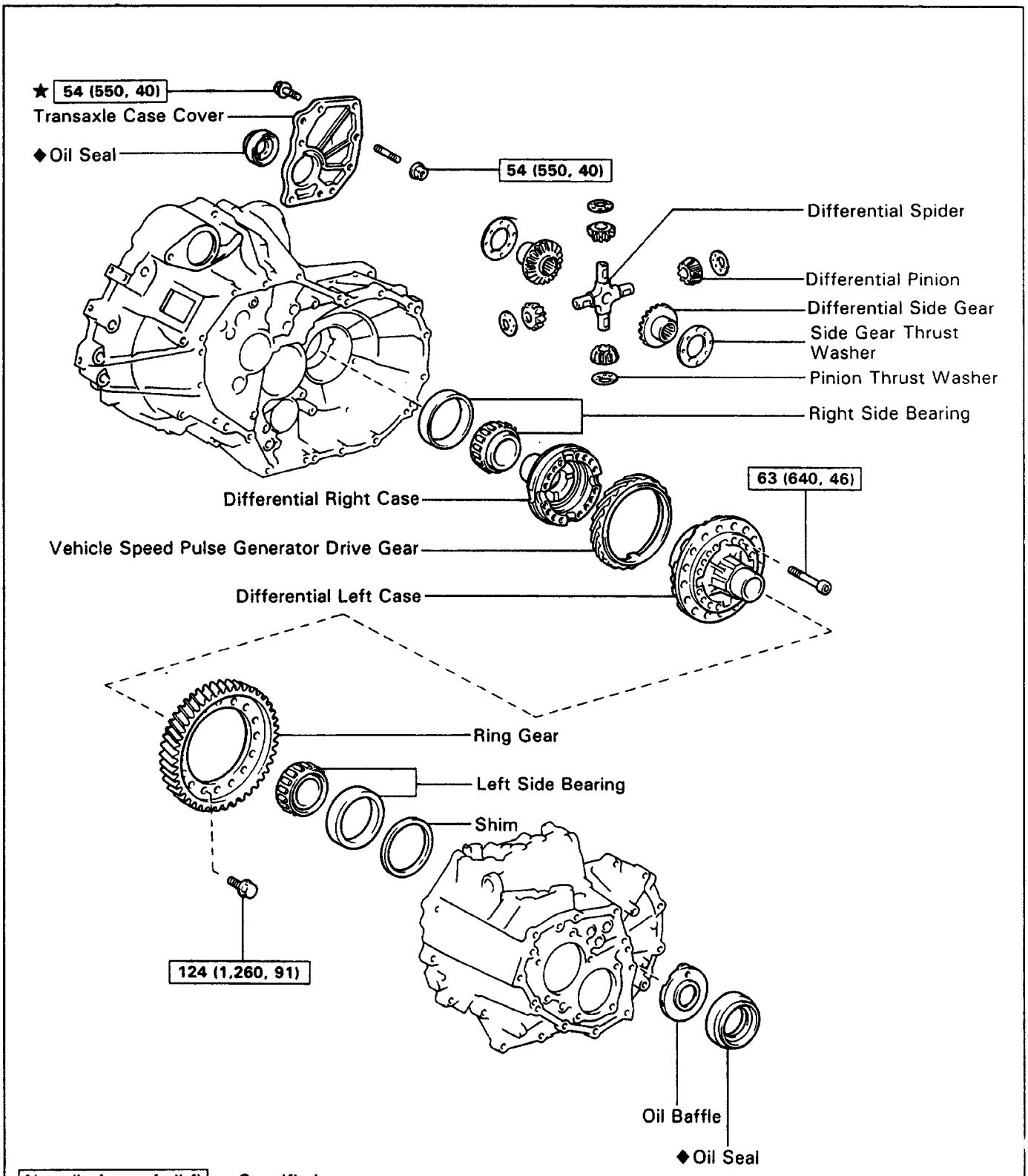

N·m (kgf·cm, ft·lbf) : Specified torque
◆ Non-reusable part
★ Precoated part

MT0721

MX01L–02

DIFFERENTIAL CASE DISASSEMBLY

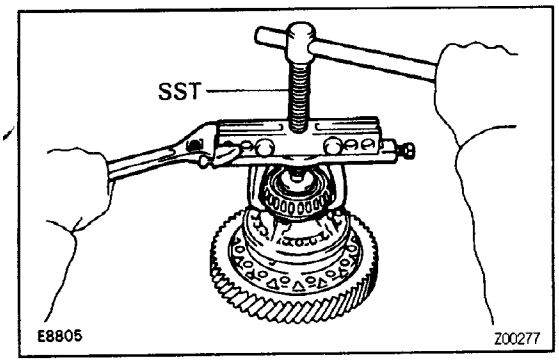

1. REMOVE SIDE BEARING

Using SST, remove the two side bearing.

SST 09950–20017

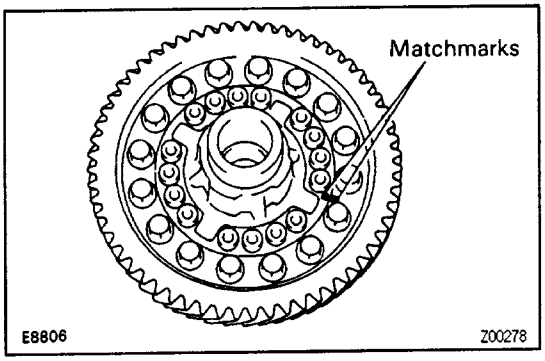

2. REMOVE RING GEAR

(a) Place the matchmarks on both the differential case and ring gear.

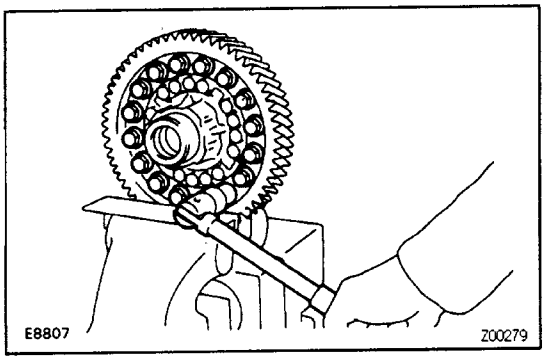

(b) Remove the sixteen bolts.

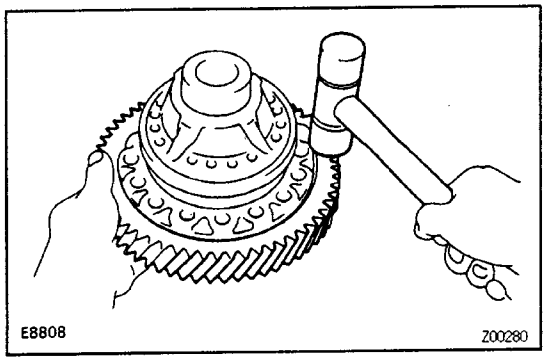

(c) Using a plastic hammer, tap out the ring gear.

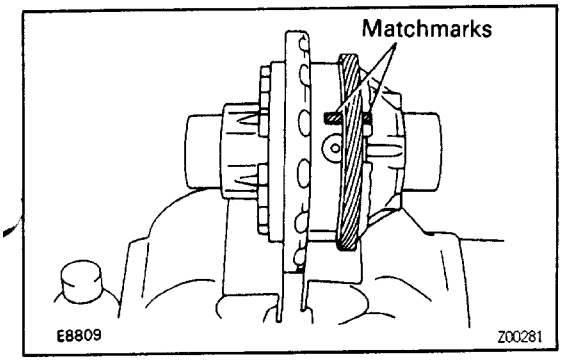

3. DISASSEMBLE DIFFERENTIAL CASE

(a) Place the matchmarks on the differential right and left case.

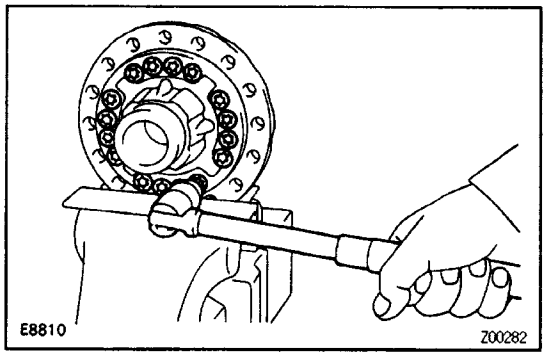

(b) Using a torx wrench, remove the sixteen torx screws.
Torx wrench: T50 09042–00040

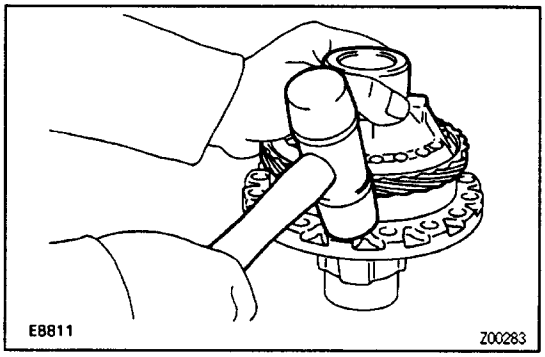

(c) Using a plastic hammer, tap out the differential left case.
(d) Remove the vehicle speed pulse generator drive gear from the differential right case.

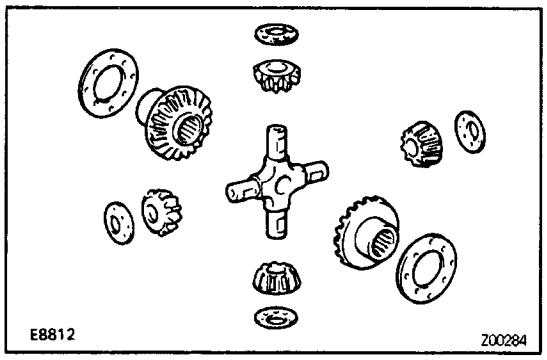

(e) Remove the two differential side gears, two side gear thrust washers, differential pinions and four pinion washers from the differential left case.

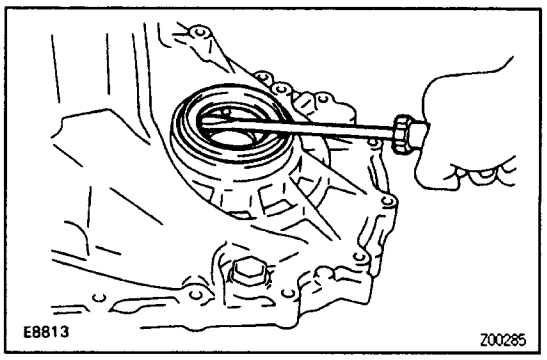

4. (TRANSMISSION CASE SIDE)
IF NECESSARY, REPLACE OIL SEAL AND TAPER ROLLER BEARING OUTER RACE
(a) Using screwdriver, remove the oil seal.
(b) Remove the transmission oil baffle.

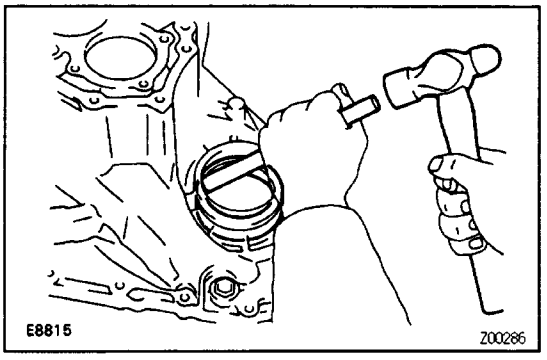

(c) Using a brass bar and hammer, drive out the bearing outer race lightly and evenly.
(d) Remove the shim.

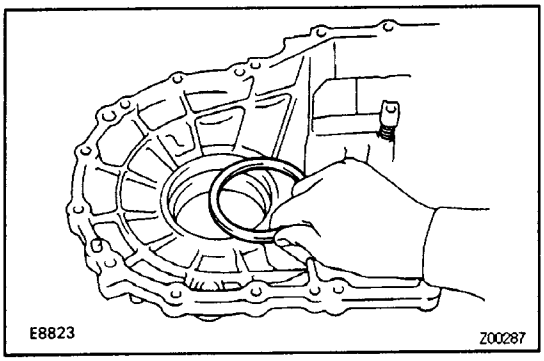

(e) Install the shim.
(See page MX2–60)
HINT: First select and install a shim of leaser thick–ness than before.

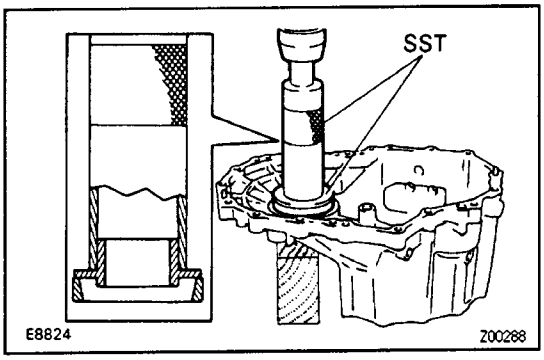

(f) Using SST and a press, install the taper roller bearing outer race.
SST 09316–60010 (09316–00010, 09316–00040)

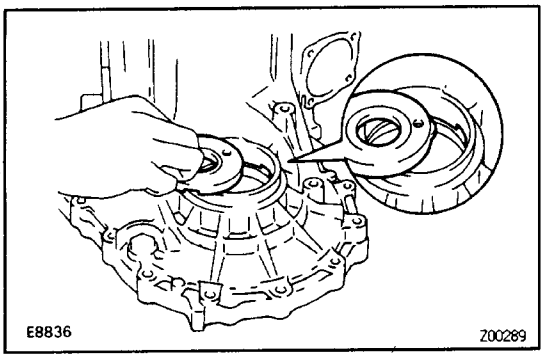

(g) Install the transmission oil baffle.
HINT: Install the transmission oil baffle projection into the case side cutout.

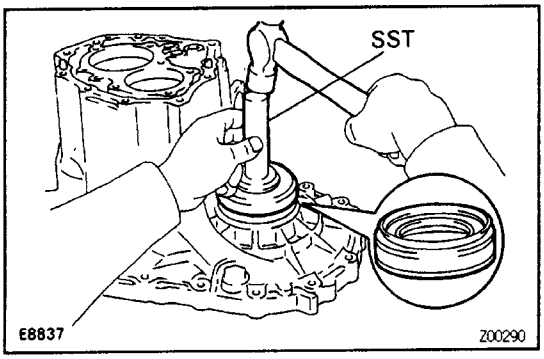

(h) Using SST and a hammer, drive in a new oil seal.
SST 09223–15010

(i) Coat the lip of oil seal with MP grease.

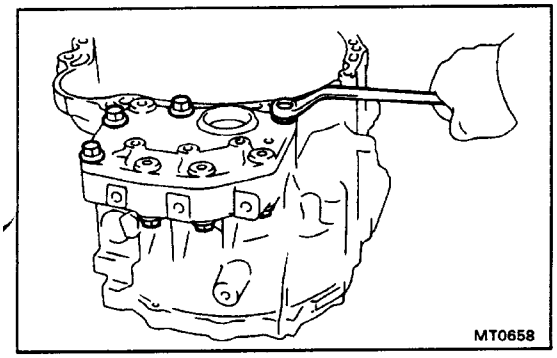

5. (TRANSAXLE CASE SIDE)
IF NECESSARY, REPLACE OIL SEAL AND TAPER ROLLER BEARING OUTER RACE

(a) Remove the four bolts and three nuts.

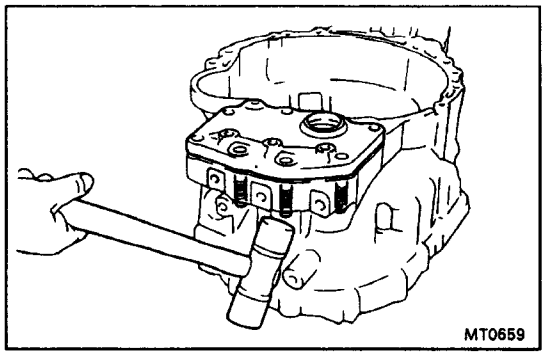

(b) Using a plastic hammer, tap the stud bolt and remove the transaxle case cover.

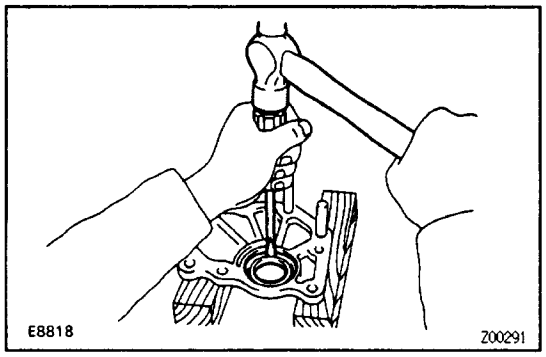

(c) Using a screwdriver and hammer, drive out the oil seal.

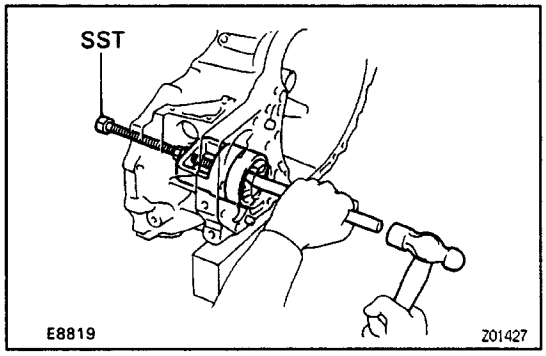

(d) Using a SST, brass bar and hammer, remove the taper roller bearing outer race.
SST 09612–65014

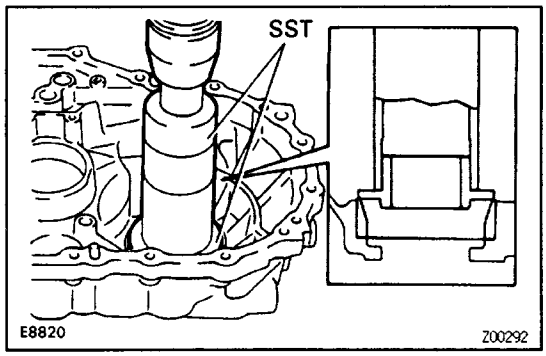

(e) Using SST and a press, install the taper roller bearing.
SST 09316–60010 (09316–00010, 09316–00040)

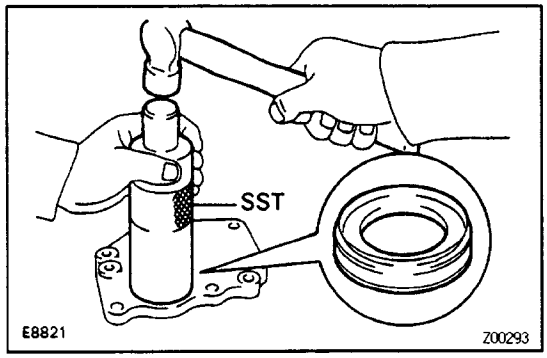

(f) Using SST and a hammer, drive in a new oil seal.
SST 09316–60010 (09316–00010)

(g) Coat the lip of oil seal with MP grease.

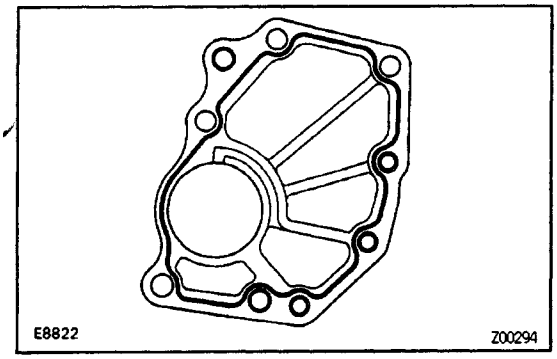

(h) Remove any packing material and be careful not to drop oil on the contacting surfaces of the transaxle case or case cover.

(i) Apply seal packing to the transansaxle case cover as shown.

Seal packing:

Part No. 08826–00090, THREE BOND 1281 or equivalent

HINT: Install the transaxle case cover as shown as the seal packing is applied.

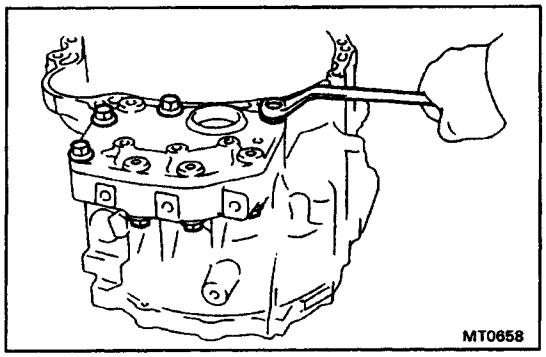

(j) Apply sealant to the bolt thread s.

Sealant:

Part No.08833–00080, THREE BOND 1344, LOC–TITE 242 or equivalent

(k) Install and torque the four bolts and three nut.

Torque: 54 N–m (550 kgf–cm. 40 ft–lbf)

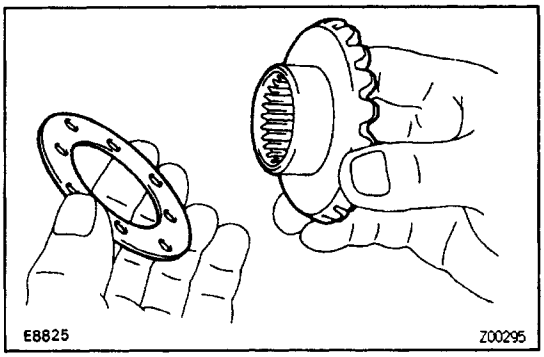

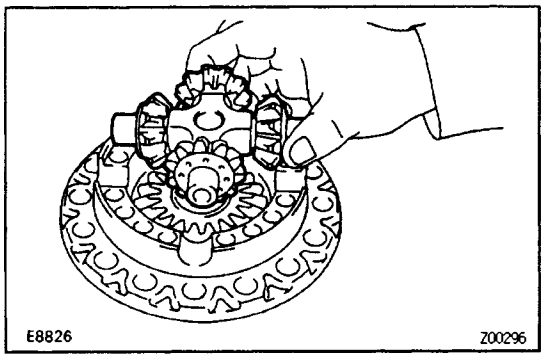

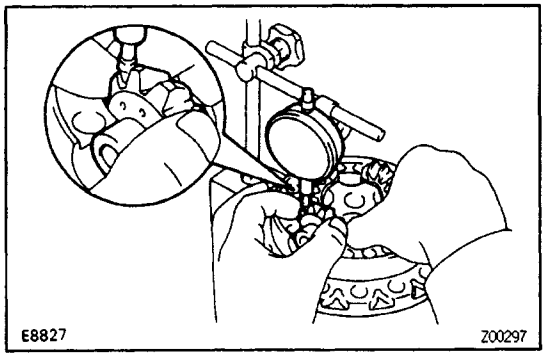

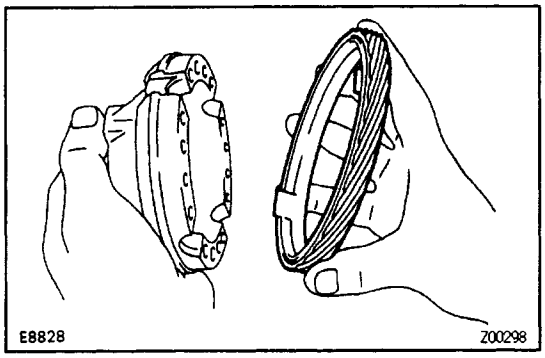

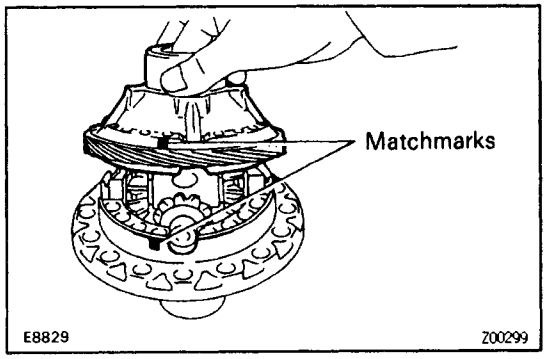

DIFFERENTIAL CASE ASSEMBLY

MX021–02

(See page MX2–60)

1. ASSEMBLE DIFFERENTIAL CASE

HINT: Coat all of the sliding and rotating surface with gear oil before assembly.

(a) Install the thrust washer to the side gear.

(b) Install the four pinions and thrust washers to the spider.

(c) Install the side gear and spider with four pinions to the differential left case.

(d) Using a dial indicator, measure the backlash of one pinion gear while holding the No.2 differential case.

Standard backlash:

0.05–0.20 mm (0.0020–0.0079 in.)

HINT: Push the pinion gear and spider with four pinions to the right side a of the left side of the differential case.

(e) Install the side gear and spider with four pinions to the right side of the differential case. Check the side gear backlash.

(f) Referring to the table below, Select the thrust washer which will ensure that the backlash is within specifi–cation. Try to select a washer of the same size.

Thickness mm (in.)	Thickness mm (in.)
0.80 (0.0315)	1.20 (0.0472)
0.90 (0.0354)	1.30 (0.0512)
1.00 (0.0394)	1.40 (0.0551)
1.10 (0.0433)	

(g) Install the vehicle speed pulse generator drive gear.

(h) Align the matchmarks on the differential cases.

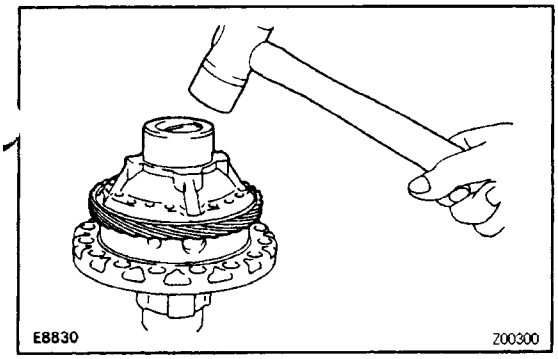

(i) Using a plastic hammer, carefully tap the differential case to install it.

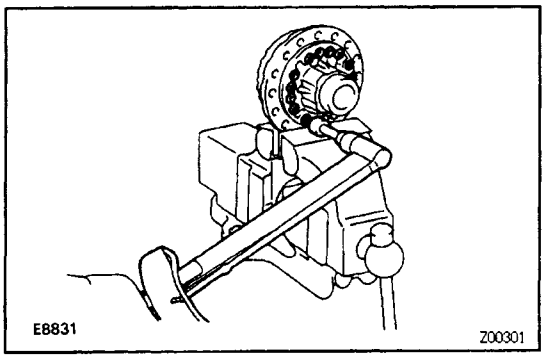

(j) Using a torx wrench, install and torque the sixteen torx screws.
Tom wrench T50 09042–00040
Torque: 63N.m (640 kgf–cm, 46 ft–lbf)

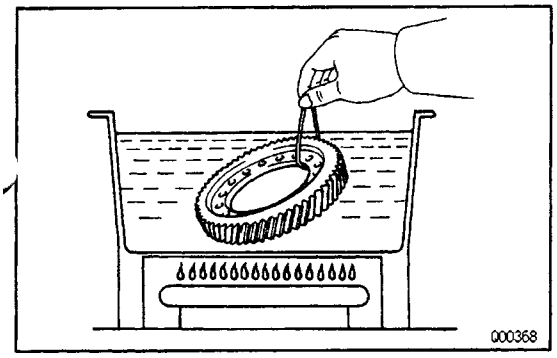

2. INSTALL RING GEAR

(a) Clean the contact surface of the differential case and the threads of the ring gear and differential case.
(b) Hear the ring gear in boiling water.
(c) After the moisture on the ring gear has completely evaporated, quickly install the ring gear to the differ–ential case.

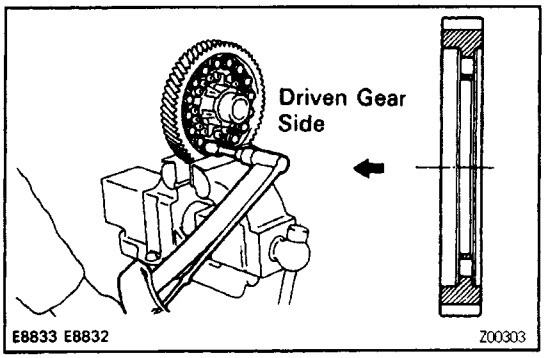

HINT: Align the matchmarks on the differential left case and contact the ring gear.

(d) Temporarily install the sixteen bolts.
NOTICE: The ring gear set bolts should not be tightened until the ring gear has cooled sufficiently.

(e) After the ring gear has cooled sufficiently, torque the ring gear set bolts.
Torque: 124 N–m (1.260 kgf–cm, 91 ft–lbf)

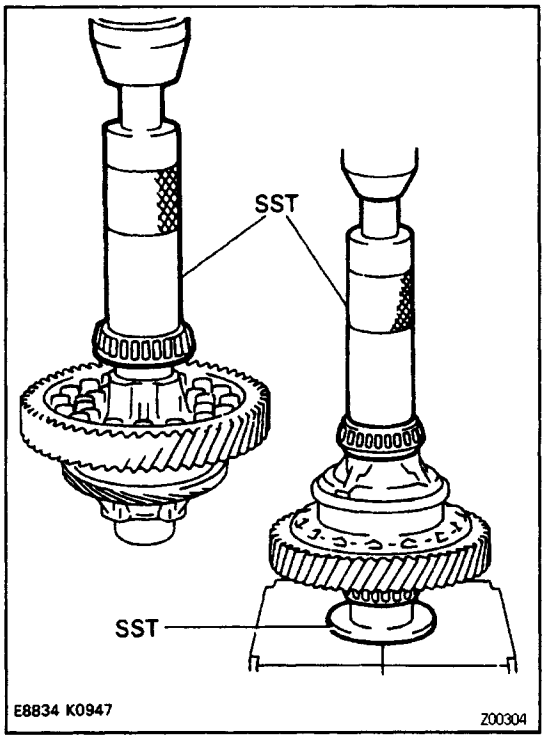

3. INSTALL SIDE BEARING

Using SST and a press, install the side bearings onto the differential case.

SST 09316–20011, 09316–60010 (09316–00010)

HINT: Press the bearing on the ring side first.

4. ADJUST OUTPUT SHAFT ASSEMBLY PRELOAD

(See pages MX2–85 to MX2–87)

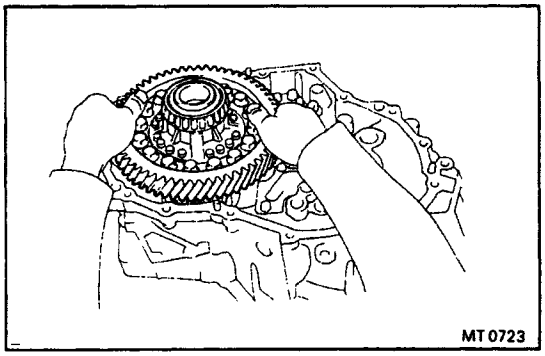

5. INSTALL DIFFERENTIAL CASE ASSEMBLY

Install the differential case assembly to the transaxle case.

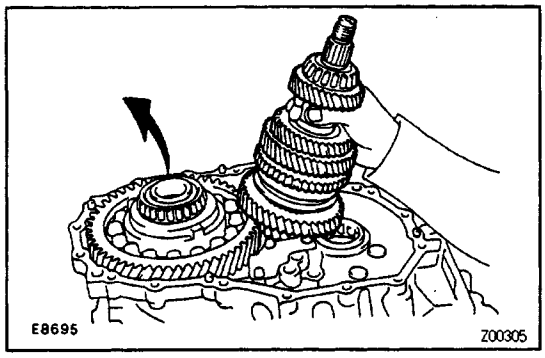

6. INSTALL OUTPUT SHAFT ASSEMBLY

Lift up the differential case, install the output shaft assembly.

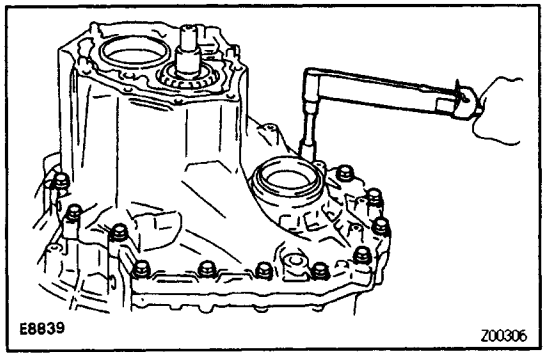

7. INSTALL TRANSMISSION CASE

(a) Install the transmission case.

HINT: If necessary, tap on the case with a plastic hammer.

(b) Install and torque the seventeen bolts.

Torque: 29 N–m (300 kgf–cm 22 ft–lbf)

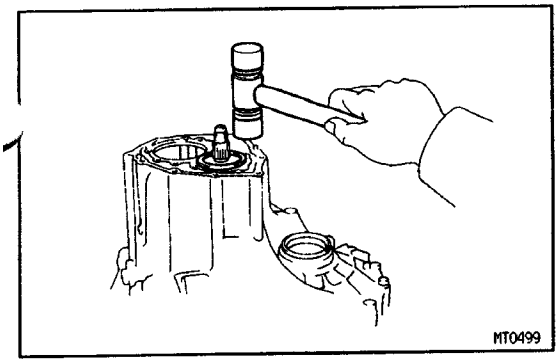

8. INSTALL OUTPUT SHAFT REAR TAPER ROLLER BEARING OUTER RACE

Using a plastic hammer, drive in the outer race.

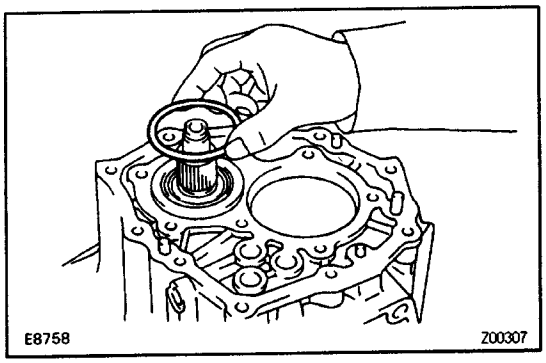

9. INSTALL SHIM

(See pages MX2–85 **to** MX2–87**)**

HINT: install the previously selected shim.

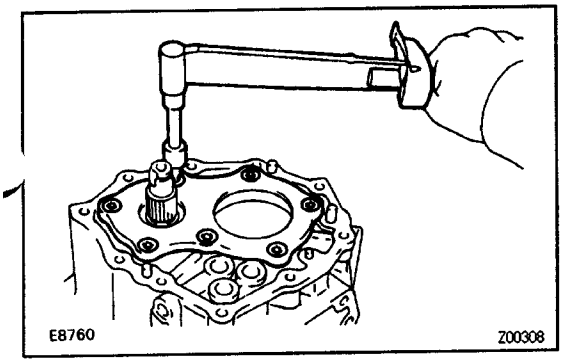

10. INSTALL REAR BEARING RETAINER

Using a torx wrench, install and torque the seven torx screws.

Torx wrench T45 09042–00050

Torque: 42 N–m (430 kgf–cm, 31 ft–lbf)

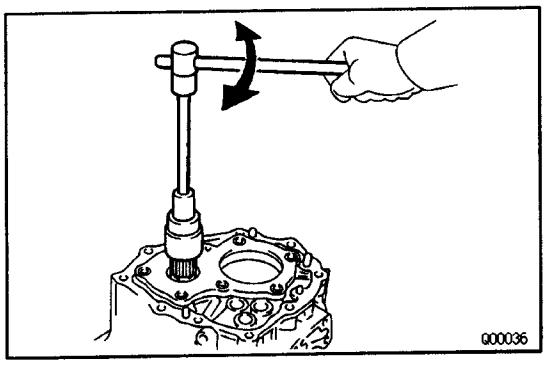

11. ADJUST DIFFERENTIAL CASE SIDE BEARING PRELOAD

(a) Install the new lock nut to the output shaft.

(b) Turn the output shaft right and left two or three times to allow the bearings to settle.

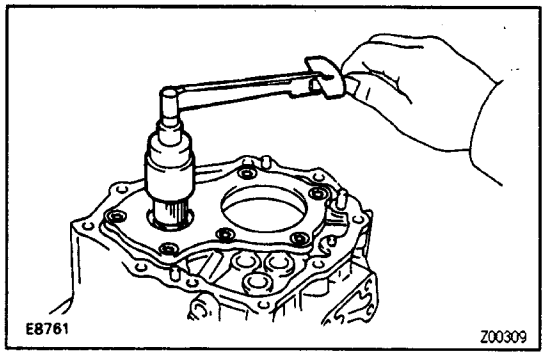

(c) Using a small torque wrench, measure the preload.

Preload (at starting):

New bearing (Add output shaft preload)

0.2–0.4 N–m (2.0–4.1 kgf–cm, 1.7–3.6 in.¿lbf)

Reused bearing (Add output¿shaft preload)

0.1–0.2 N–m (1.3–2.5 kgf–cm, 1.1–2.2 in.–lbf)

If the preload is not within specification, select the thrust washers.

HINT: The total preload will change about 0.1–0.2 N–m (1–2 kgf–cm, 0.9–1.7 ft–lbf) with each shim thickness.

Mark	Thickness mm (in.)	Mark	Thickness mm (in.)
0	2.00 (0.0787)	9	2.45 (0.0965)
1	2.05 (0.0807)	A	2.50 (0.0984)
2	2.10 (0.0827)	B	2.55 (0.1004)
3	2.15 (0.0846)	C	2.60 (0.1024)
4	2.20 (0.0866)	D	2.65 (0.1043)
5	2.25 (0.0886)	E	2.70 (0.1063)
6	2.30 (0.0906)	F	2.75 (0.1083)
7	2.35 (0.0925)	G	2.80 (0.1102)
8	2.40 (0.0945)	H	2.85 (0.1122)

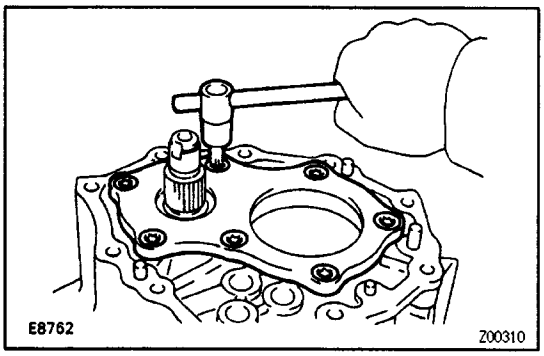

12. REMOVE REAR BEARING RETAINER

Using torx wrench, remove the seven torx screws and rear bearing retainer.

Torx wrench T45 09042–00050

13. REMOVE SHIM

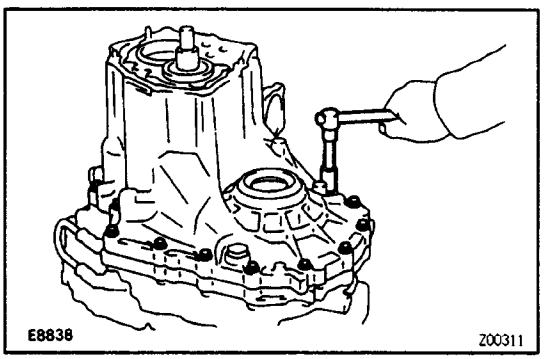

14. REMOVE TRANSMISSION CASE

(a) Remove the seventeen bolts.

(b) Using a plastic hammer, tap off the transmission case.

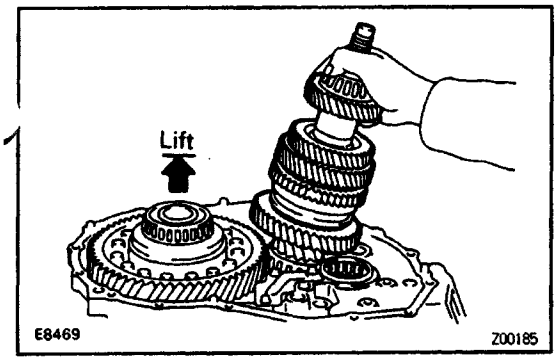

15. REMOVE OUTPUT SHAFT ASSEMBLY

16. REMOVE DIFFERENTIAL CASE ASSEMBLY

INPUT SHAFT

MX016-01

COMPONENTS

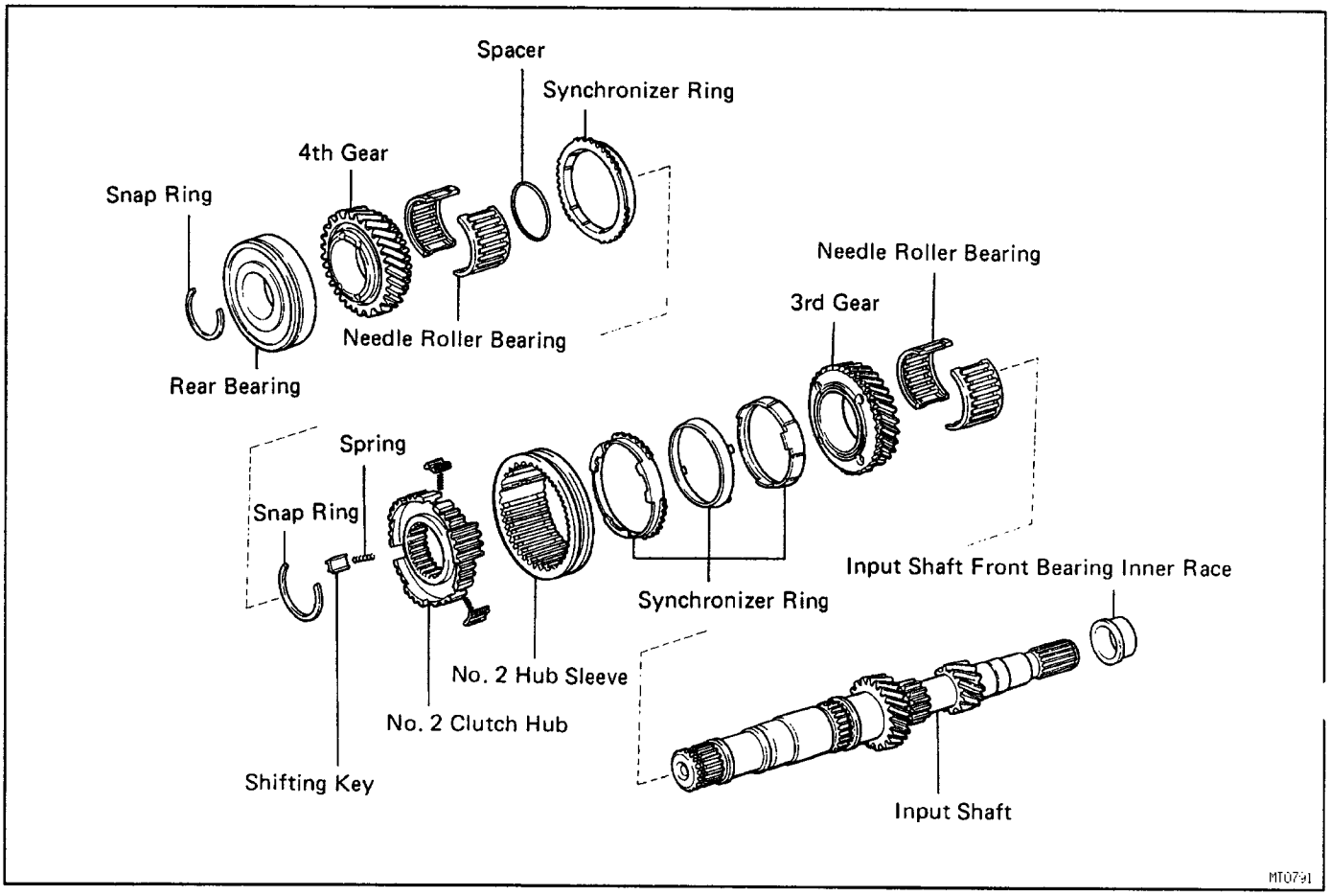

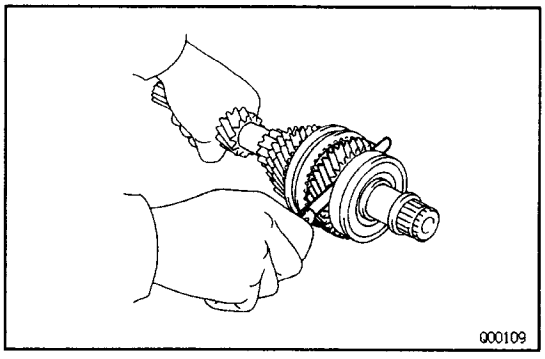

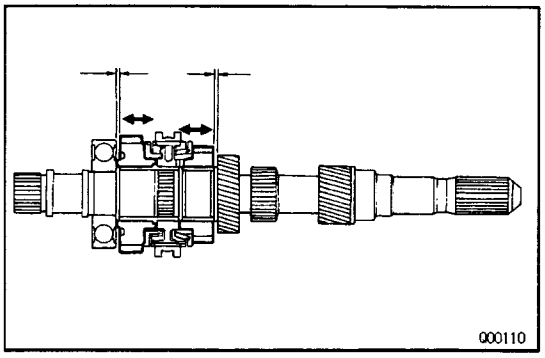

MX017-01

INPUT SHAFT DISASSEMBLY

1. MEASURE THIRD AND FOURTH GEAR THRUST CLEARANCE

Using a feeler gauge, measure the thrust clearance.

Standard clearance:

3rd gear

0.10–0.45 mm (0.0039–0.0177 in.)

4th gear

0.10–0.55 mm (0.0039–0.0217 in.)

Maximum clearance:

3rd gear

0.50 mm (0.0197 in.)

4th gear

0.60 mm (0.0236 in.)

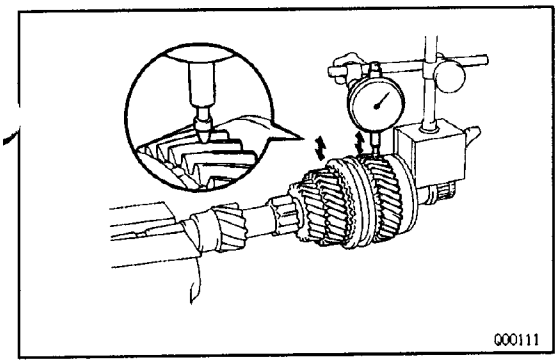

2. CHECK OIL CLEARANCE OF THIRD AND FORTH GEAR

Using dial indicator, measure the oil clearance between the gear and shaft.

Standard clearance:

3rd gear

0.009–0.053 mm (0.0004–0.0021 in.)

4th gear

0.009–0.051 mm (0.0004–0.0020 in.)

Maximum clearance:

3rd and 4th gear

0.070 mm (0.0028 in.)

If clearance exceeds the limit, replace the gear, needle roller bearing or shaft.

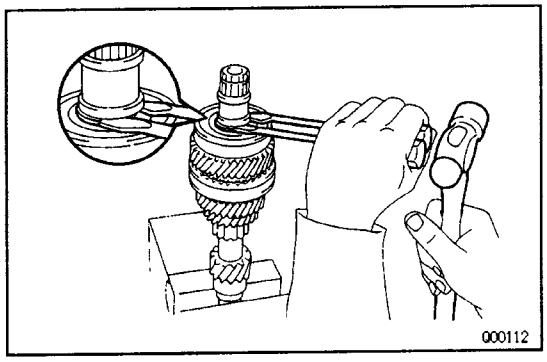

3. REMOVE SNAP RING

Using two screwdriver and a hammer–, tap out the snap ring.

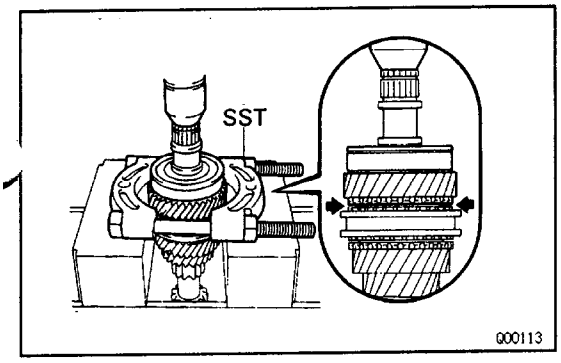

4. REMOVE RADIAL BALL BEARING AND FOURTH GEAR

Using SST and a press, remove the radial bearing.

SST 09950–00020

5. REMOVE NEEDLE ROLLER BEARINGS, SPACER AND SYNCHRONIZER RING

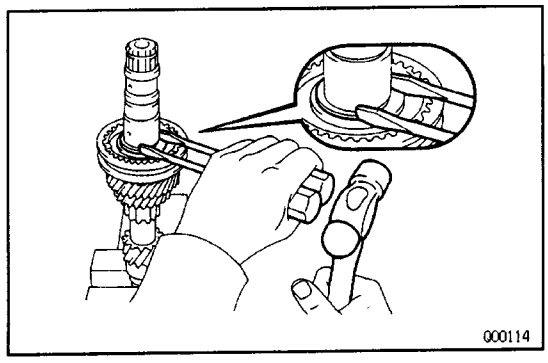

6. REMOVE SNAP RING

Using two screwdrivers and a hammer, tap out the snap ring.

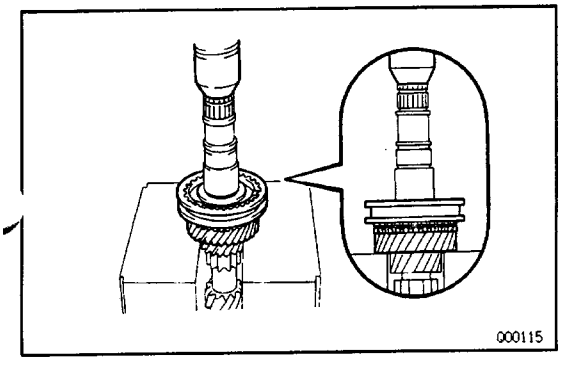

7. REMOVE NO.2 CLUTCH HUB ASSEMBLY, SYNCHRONIZER RING AND THIRD GEAR

Using a press, remove No.2 hub sleeve, 3rd gear, synchronizer ring and needle roller bearings.

8. REMOVE NEEDLE ROLLER BEARING

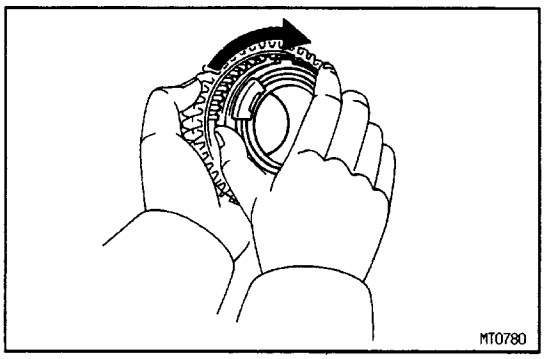

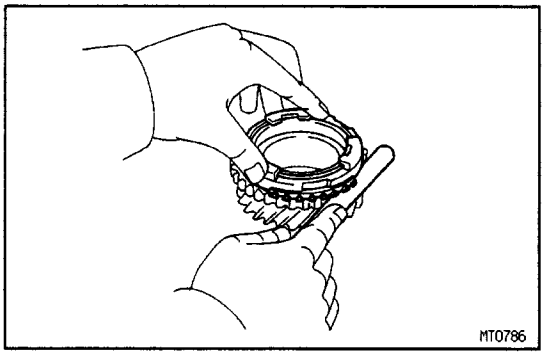

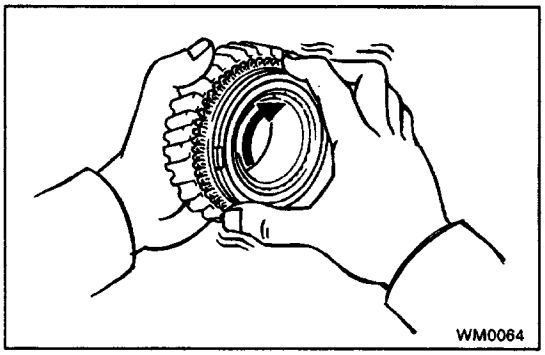

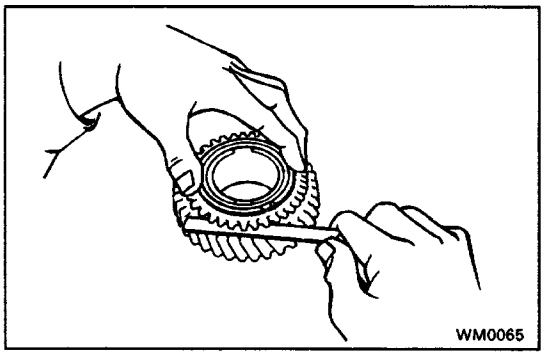

INPUT SHAFT COMPONENT PARTS INSPECTION

MX018–01

1. INSPECT SYNCHRONIZER RING FOR THIRD GEAR

(a) Check for wear or damage.

(b) Check the braking effect of the synchronizer ring.

Turn the synchronizer ring in one direction while pushing it to the gear cone and check that the ring is locked.

If the braking effect is insufficient, replace the syn–chronizer ring.

(c) Measure the clearance between the synchronizer ring back and gear spline end.

Minimum clearance:

0.7 mm (0.028 in.)

If the clearance is less than the limit, replace the synchronizer ring.

2. INSPECT SYNCHRONIZER RING FOR FOURTH GEAR

(a) Check for wear or damage.

(b) Check the braking effect of the synchronizer ring

Turn the synchronizer ring in one direction while pushing it to the gear cone and check that the ring is locked.

If the braking effect is insufficient, lightly rub the synchronizer ring and gear cone by applying a small amount of fine lapping compound.

NOTICE:

- **Wash off completely the fine lapping compound after rubbing.**
- **Check again the braking effect of the synchronizer ring.**

(c) Measure the clearance between the synchronizer ring back and spline end.

Minimum clearance:

0.6 mm (0.024 in.)

If the clearance is less than the limit, replace the synchronizer ring and gear cone by applying a small amount of fine lapping compound.

NOTICE: Wash off completely, the fine lapping com–pound after rubbing.

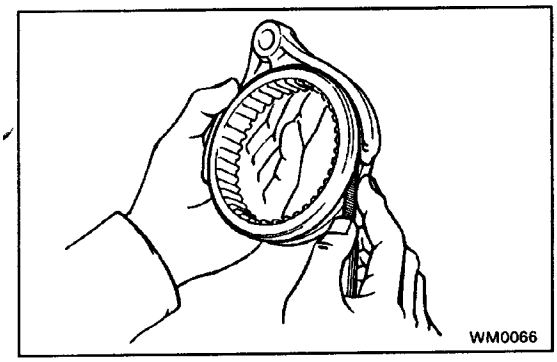

3. MEASURE CLEARANCE OF NO.2 SHIFT FORK AND HUB SLEEVE

Using a feeler gauge, measure the clearance between the hub sleeve and shift fork.

Maximum clearance:

1.0 mm (0.039 in.)

If the clearance exceeds the limit, replace the shift fork or hub sleeve.

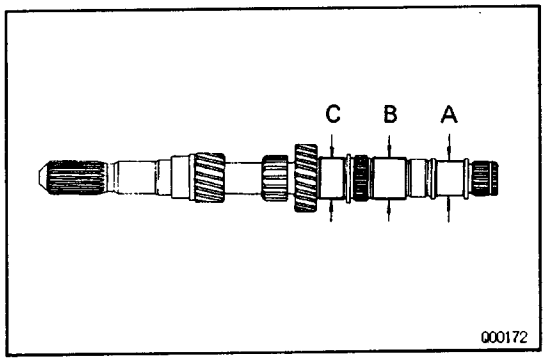

4. INSPECT INPUT SHAFT

(a) Check the input shaft for wear or damage.

(b) Using a micrometer, measure the outer diameter of the input shaft journal surface.

Minimum outer diameter:

Part A

27.950 mm (1.1004 in.)

Part B and C

35.950 mm (1.4154 in.)

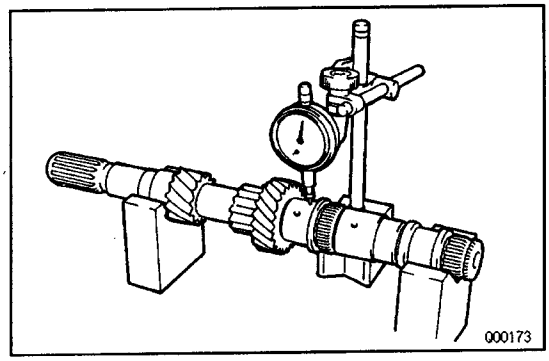

(c) Using a dial indicator, check the shaft runout.

Maximum runout:

0.05 mm (0.0020 in.)

MX019–01

INPUT SHAFT ASSEMBLY

(See page MX2–38)

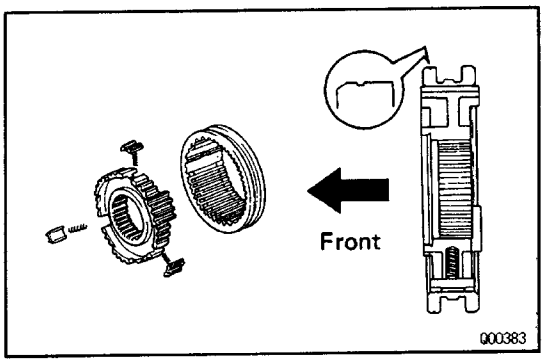

HINT: Coat all of the sliding and rotating surface with gear oil before assembly.

1. INSTALL NO.2 CLUTCH HUB INTO HUB SLEEVE

(a) Install the three springs and shifting keys to the clutch hub.

(b) Install the hub sleeve to the clutch hub.

HINT: Direct identification groove of the hub sleeve to front of the transmission.

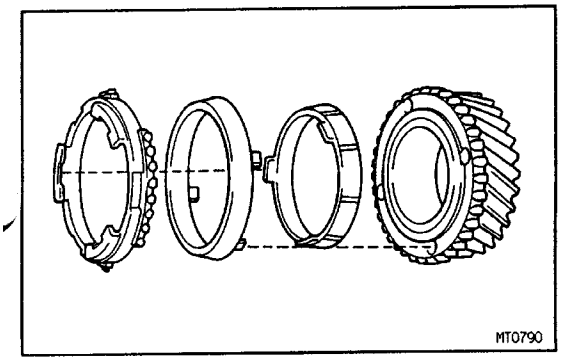

2. INSTALL NEEDLE ROLLER BEARING, THIRD GEAR, SYNCHRONIZER RINGS AND NO.2 HUB SLEEVE ASSEMBLY TO INPUT SHAFT

(a) Apply MP grease to the needle roller bearing.

(b) Assembly the needle roller bearings into the 3rd gear.

(c) Place the synchronizer rings on the gear and align the ring slots with the shifting keys.

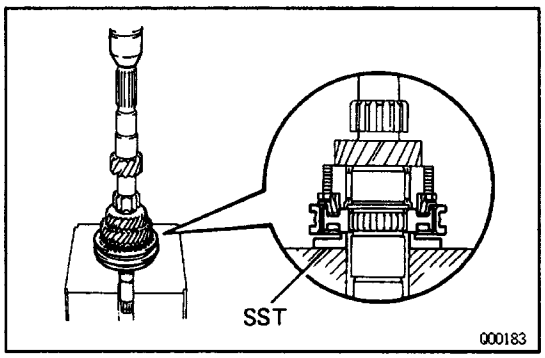

(d) Using SST and a press, install the 3rd gear and No.2 hub sleeve.
SST 09506–35010

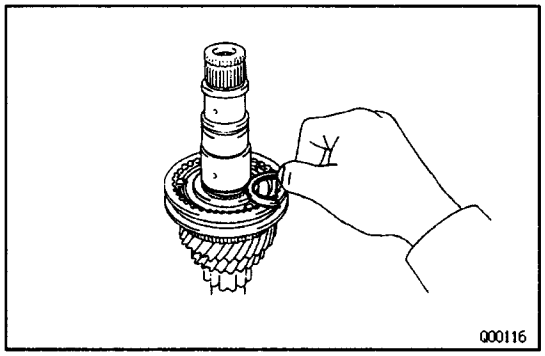

3. INSTALL SNAP RING

(a) Select a snap ring that will allow minimum axial play.

Mark	Thickness mm (in.)	Mark	Thickness mm (in.)
H	2.30 (0.0906)	M	2.50 (0.0984)
J	2.35 (0.0925)	N	2.55 (0.1004)
K	2.40 (0.0945)	P	2.60 (0.1024)
L	2.45 (0.0965)		

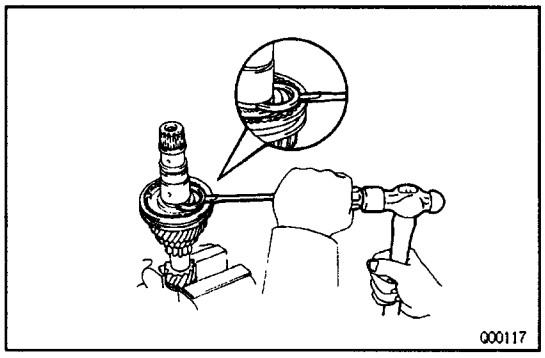

(b) Using a screwdriver and hammer, tap in the snap ring.

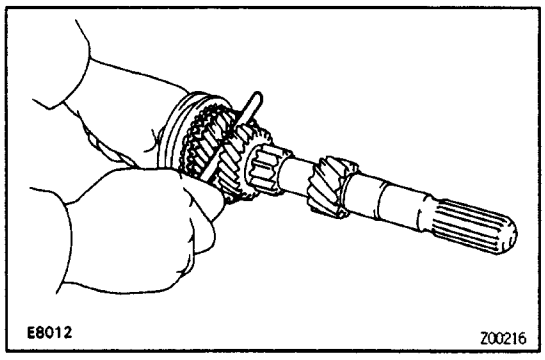

4. MEASURE THIRD GEAR THRUST CLEARANCE

Using a feeler gauge, measure the 3rd gear thrust clearance.

Standard clearance:

0.10–0.45 mm (0.0039–0.0177 in.)

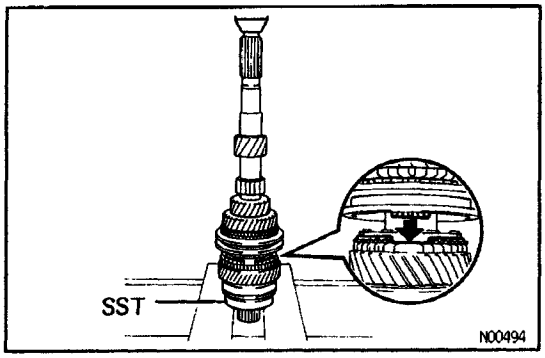

5. INSTALL SPACER, SYNCHRONIZER RING, NEEDLE ROLLER BEARINGS, FOURTH GEAR AND RADIAL BALL BEARING

(a) Install the spacer.
(b) Apply MP grease to the needle roller bearings.
(c) Place the synchronizer ring on the gear and align the ring slots with the shifting keys.
(d) Install the 4th gear.
(e) Using SST and a press, install the radial ball bearing.
SST 09506–35010

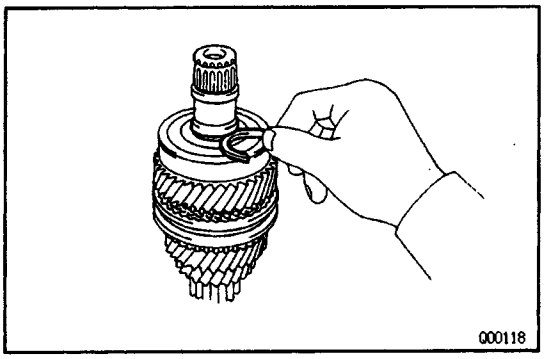

6. INSTALL SNAP RING

(a) Select a snap ring that will allow minimum axial play.

Mark	Thickness mm (in.)	Mark	Thickness mm (in.)
1	2.35 (0.0925)	**5**	2.55 (0.1004)
2	2.40 (0.0945)	**6**	2.60 (0.1024)
3	2.45 (0.0965)	**7**	2.65 (0.1043)
4	2.50 (0.0984)	**8**	2.70 (0.1063)

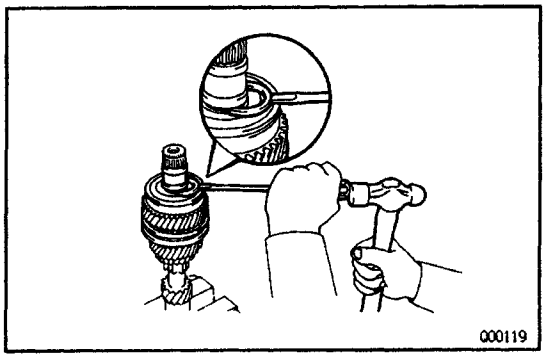

(b) Using a screwdriver and hammer, tap in the snap ring.

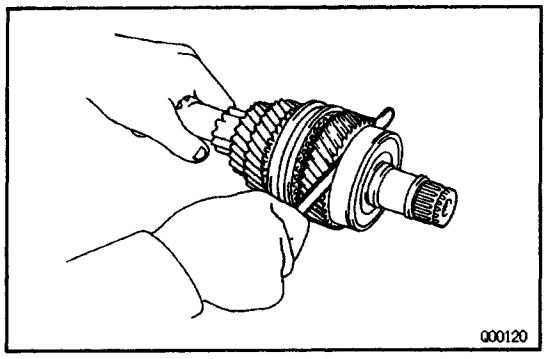

7. MEASURE FOURTH GEAR THRUST CLEARANCE

Using a feeler gauge, measure the 4th gear thrust clearance.

Standard clearance:
0.10–0.55 mm (0.0039–0.0217 in.)

OIL PUMP

MX01E-01

COMPONENTS

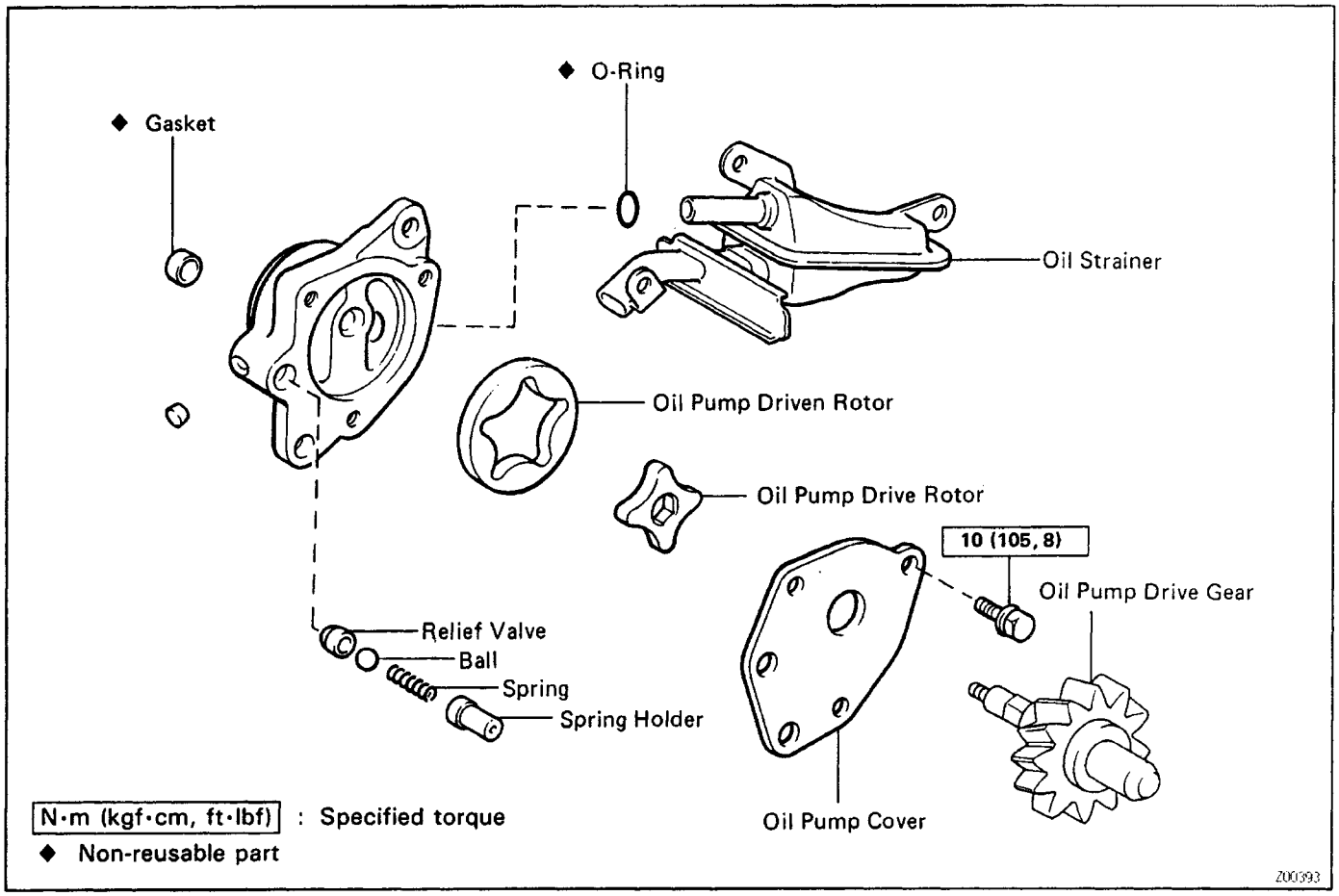

MX01F-01

OIL PUMP DISASSEMBLY

1. CHECK OPERATION OF OIL PUMP

Install the oil pump drive gear to the drive rotor, check that the drive rotor turns smoothly.

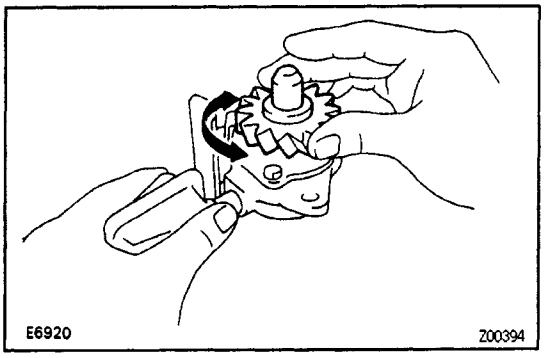

2. REMOVE GASKET FROM OIL PUMP CASE

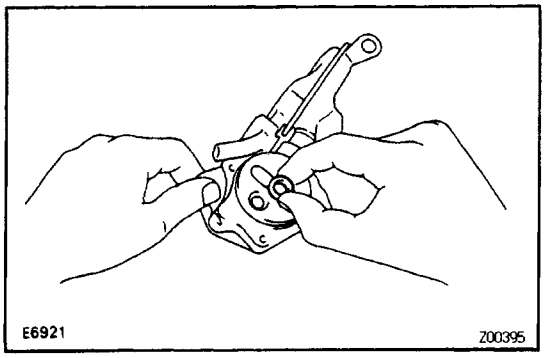

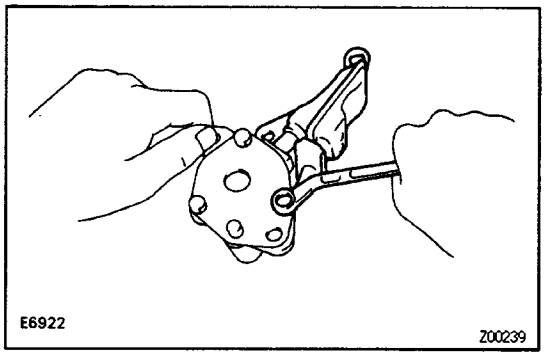

3. REMOVE BOLT AND OIL STRAINER

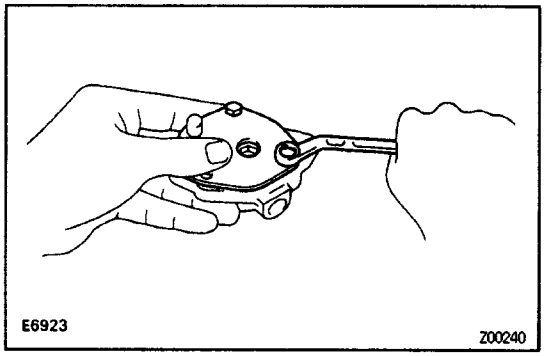

4. REMOVE OIL PUMP COVER

(a) Hold the pump cover, remove the two bolts and a cover.

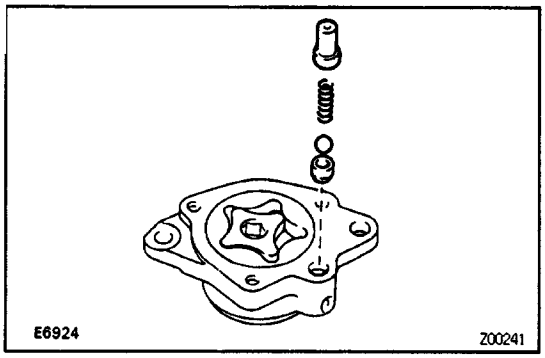

(b) Remove the spring holder, spring, ball and relief valve seat.

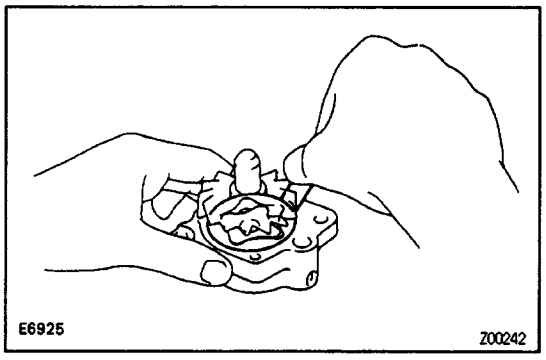

5. CHECK ROTOR BODY CLEARANCE

(a) Install the oil pump drive gear to the drive rotor.

(b) Using a feeler gauge, measure the body clearance between the drive rotor and oil pump case.

Standard clearance:
0.10–0.16 mm (0.0039–0.0063 in.)
Maximum clearance:
0.30 mm (0.0118 in.)

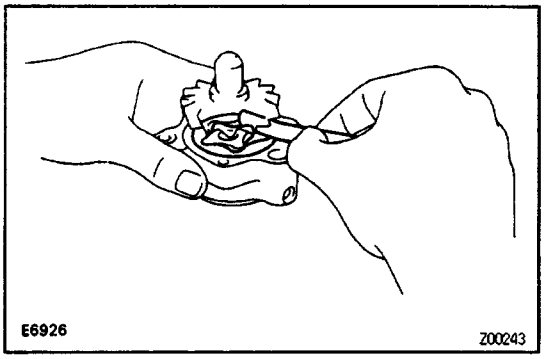

6. CHECK ROTOR TIP CLEARANCE

(a) Install the oil pump drive gear to the drive rotor.

(b) Using a feeler gauge, measure the tip clearance between the drive and driven rotors.

Standard clearance:
0.08–0.15 mm (0.0031–0.0058 in.)
Maximum clearance:
0.30 mm (0.0118 in.)

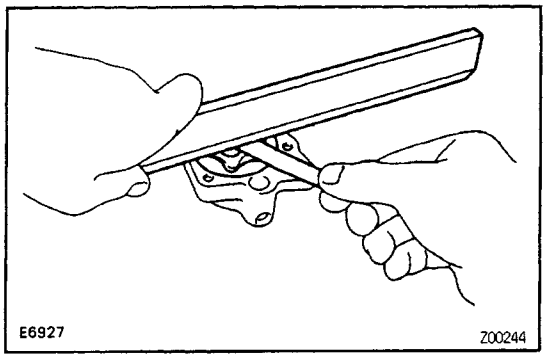

7.CHECK SIDE CLEARANCE

Using a precision straight edge and feeler gauge, measure the side clearance of both rotors.

Standard clearance:

0.03–0.08 mm (0.0012–0.0031 in.)

Maximum clearance:

0.15 mm (0.0059 in.)

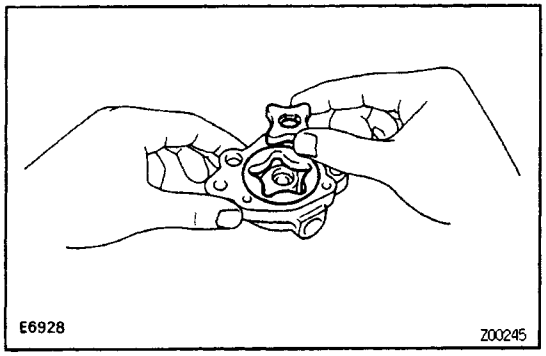

8. REMOVE OIL PUMP DRIVE ROTOR AND DRIVEN ROTOR

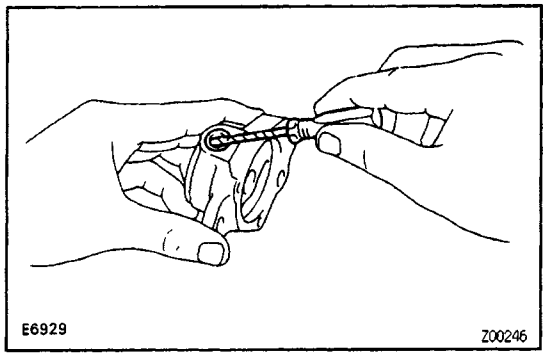

9. IF NECESSARY, REPLACE O–RING

(a) Using a screwdriver, remove the 0–ring.

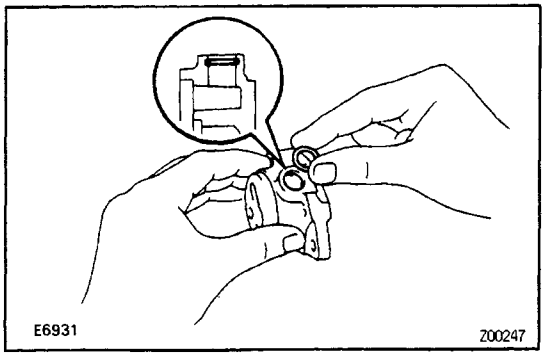

(b) Apply gear oil to the 0–ring.

(c) Install the O–ring.

OIL PUMP ASSEMBLY

MX01G–01

(See page MX2–51)

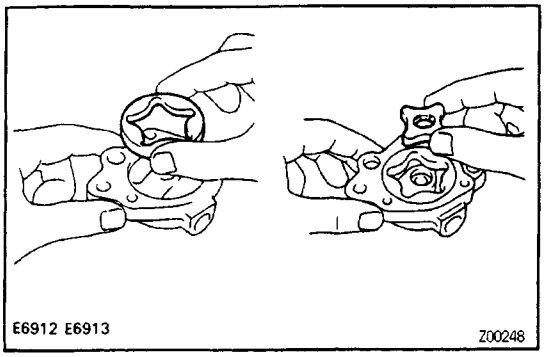

1. INSTALL DRIVEN ROTOR AND DRIVE ROTOR

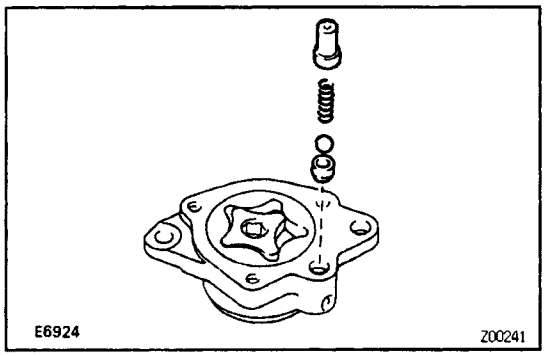

2. INSTALL OIL PUMP COVER

(a) Install the relief valve, ball, spring and spring holder to the oil pump case.

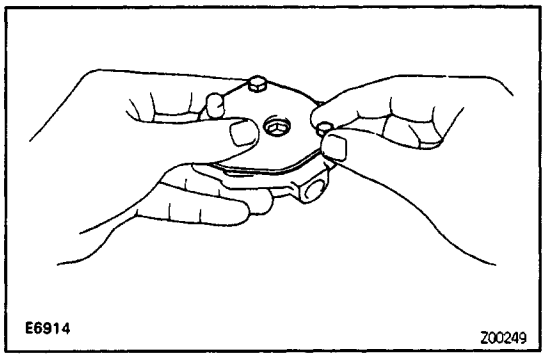

(b) Hold the oil pump cover, temporarily install the two bolts.

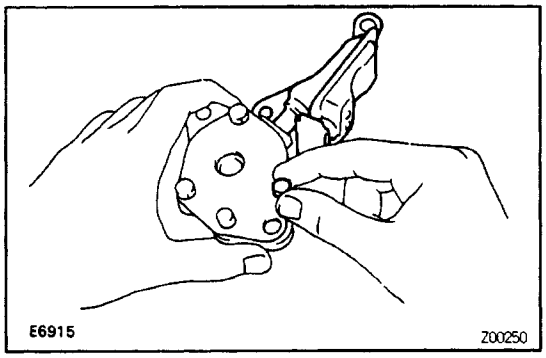

3. INSTALL OIL STRAINER

Install the oil strainer to the oil pump case, temporarily install the bolt.

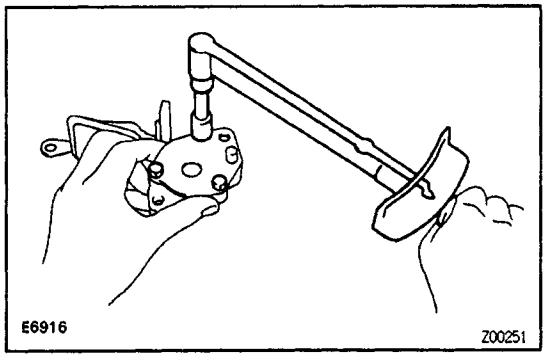

4. TORQUE OIL PUMP COVER BOLTS

Torque the three bolts evenly.

Torque: 10 N–m (105 kgf–cm, 8 ft–lbf)

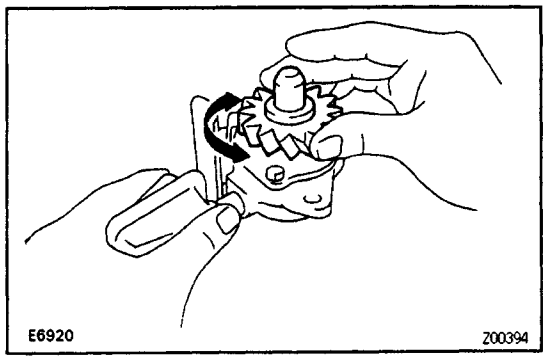

5. CHECK OPERATION OF OIL PUMP

Install the oil pump drive gear to the drive rotor, check that the drive rotor turns smoothly.

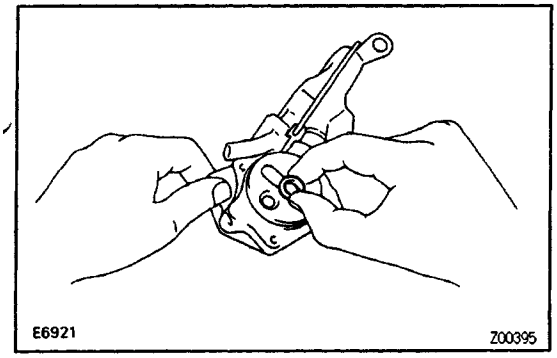

6. INSTALL GASKET

Install a new gasket to the oil pump case.

OPERATION

- The illustrations below show the engagements of transaxle gears.

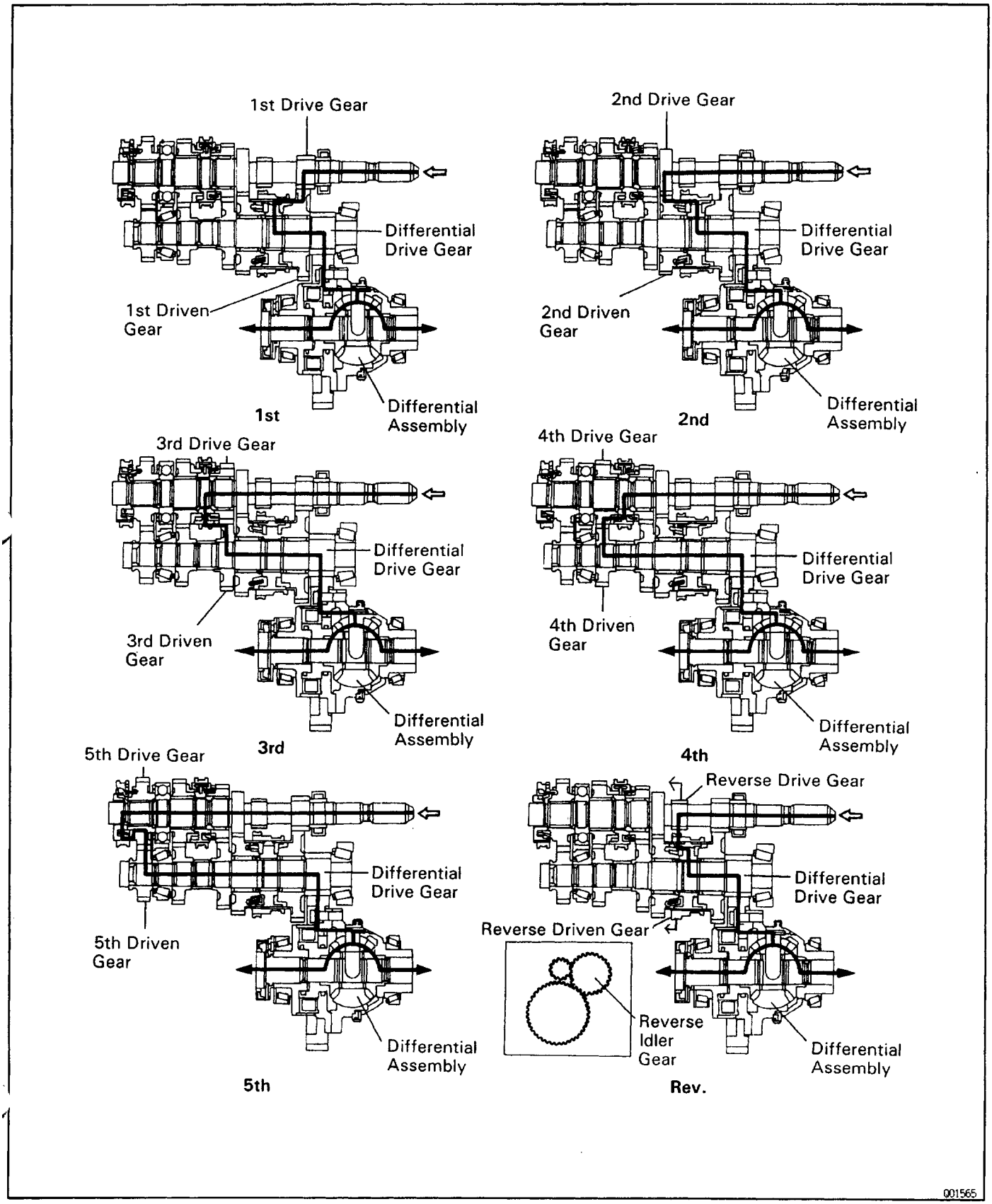

OUTPUT SHAFT

MX01A–01

COMPONENTS

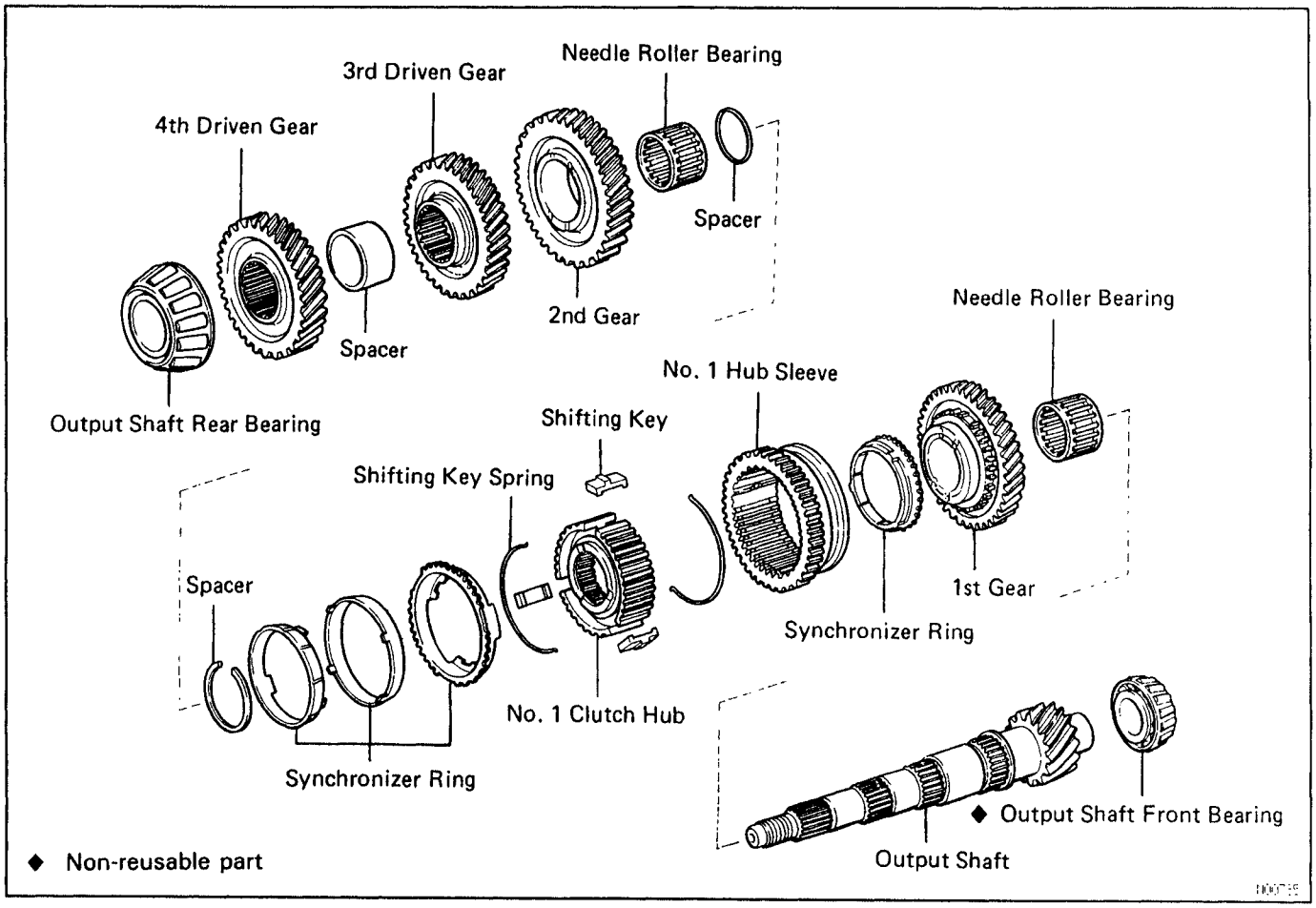

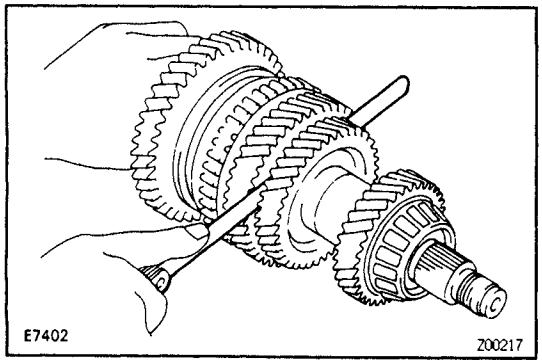

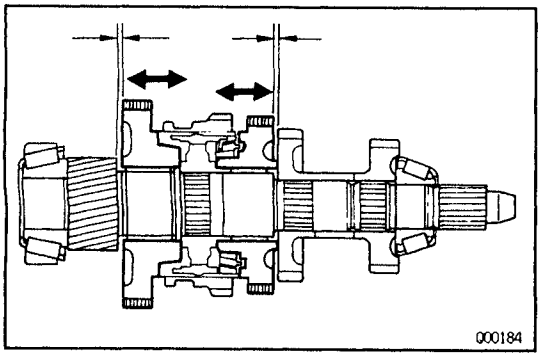

OUTPUT SHAFT DISASSEMBLY

MX01B–01

1. MEASURE FIRST AND SECOND GEAR THRUST CLEARANCE

Using a feeler gauge, measure the thrust clearance.

Standard clearance:

1st gear

0.10–0.35 mm (0.0039–0.0138 in.)

2nd gear

0.10–0.45 mm (0.0039–0.0177 in.)

Maximum clearance:

1st gear

0.40 mm (0.0157 in.)

2 nd gear

0.50 mm (0.0197 in)

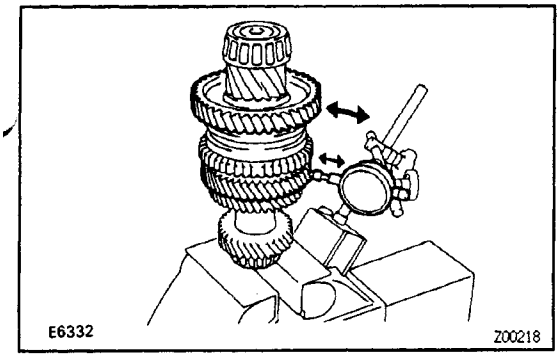

2. CHECK OIL CLEARANCE OF FIRST AND SECOND GEAR

Using a dial indicator, measure the oil clearance between the gear and shaft.

Standard clearance:

1 st gear

0.009–0.051 mm (0.0004–0.0020 in.)

2nd gear

0.009–0.053 mm (0.0004–0.0021 in.)

Maximum clearance:

1 st and 2nd gear

0.070 mm (0.0028 in.)

If the clearance exceeds the limit, replace the gear, needle roller bearing or shaft.

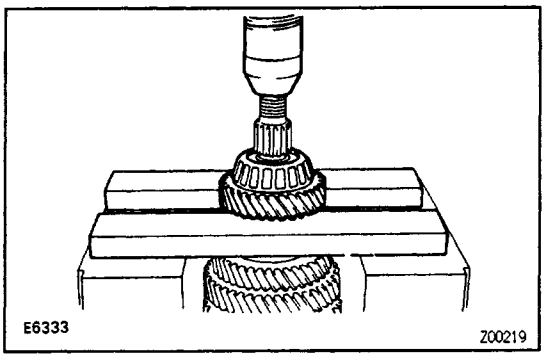

3. REMOVE OUTPUT SHAFT REAR BEARING, FOURTH DRIVEN GEAR AND SPACER

(a) Using a press, remove the bearing and 4th driven gear.

(b) Remove the spacer.

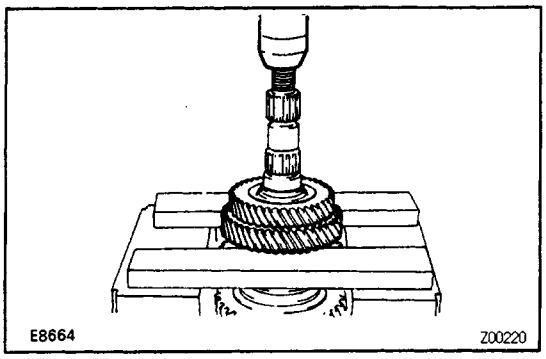

4. REMOVE THIRD DRIVEN GEAR AND SECOND GEAR

Using a press, remove the 3rd driven gear and 2nd gear.

5. REMOVE NEEDLE ROLLER BEARING SPACER AND SYNCHRONIZER RINGS

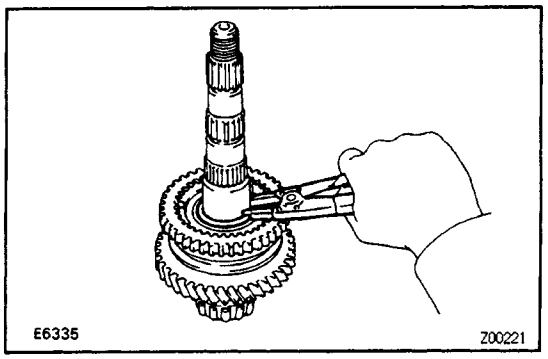

6. REMOVE SNAP RING

Using a snap ring expander, remove the snap ring.

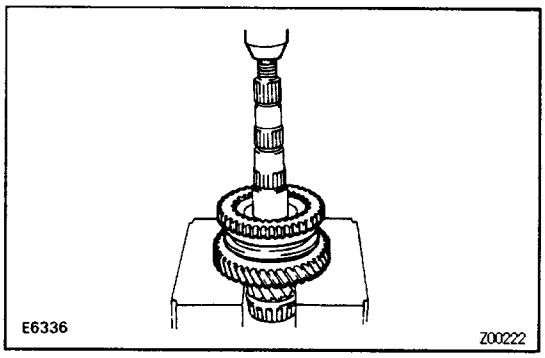

7. REMOVE NO. 1 HUB SLEEVE ASSEMBLY AND FIRST GEAR

Using a press, remove the NO.1 hub sleeve and 1st gear.

8. REMOVE SYNCHRONIZER RING AND NEEDLE ROLLER BEARINGS

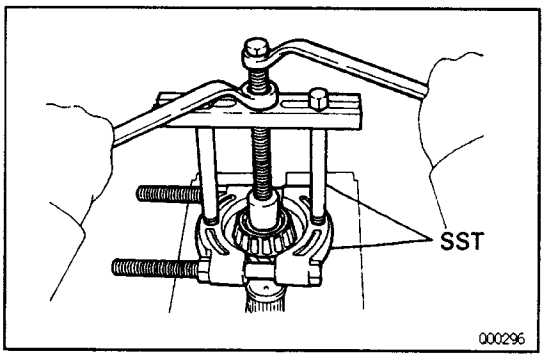

9. REMOVE OUTPUT SHAFT FRONT BEARING

Using SST, remove the output shaft front bearing.
SST 09950–00020, 09950–00030

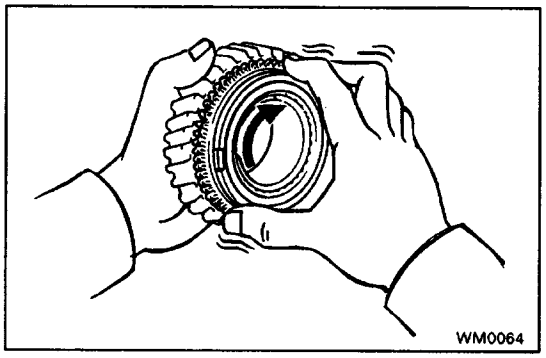

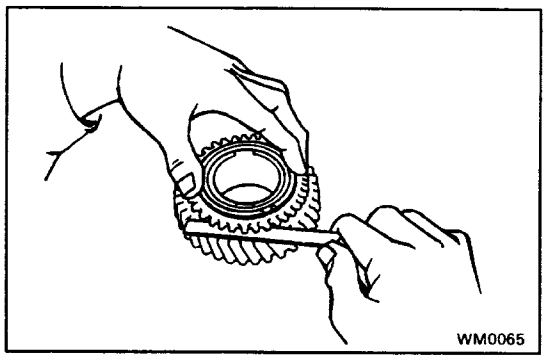

OUTPUT SHAFT COMPONENT PARTS INSPECTION MX01C–01

1. INSPECT SYNCHRONIZER RING FOR FIRST GEAR

(a) Check for wear or damage.

(b) Check the braking effect of the synchronizer ring.

Turn the synchronizer ring in one direction while pushing it to the gear cone and check that the ring is locked.

If the braking effect is insufficient, lightly rub the synchronizer ring and gear cone by applying a small amount of fine lapping compound.

NOTICE:

- **Wash off completely the fine lapping compound after rubbing.**
- **Check again the braking effect of the synchronizer ring.**

(c) Measure the clearance between the synchronizer ring back and gear spline end.

Minimum clearance:
0.6 mm (0.024 in.)

If the clearance is less than the limit, replace the synchronizer ring and gear cone by applying a small amount of fine lapping compound.

NOTICE: Wash off completely the fine lapping compound after rubbing.

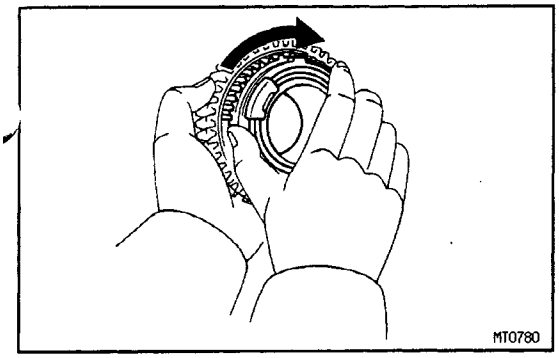

2. INSPECT SYNCHRONIZER RING FOR SECOND GEAR

(a) Check for wear or damage.

(b) Check the braking effect of the synchronizer direction while pushing it to the gear cone and check that the ring is locked.

If the braking effect is insufficient, replace the synchromize ring.

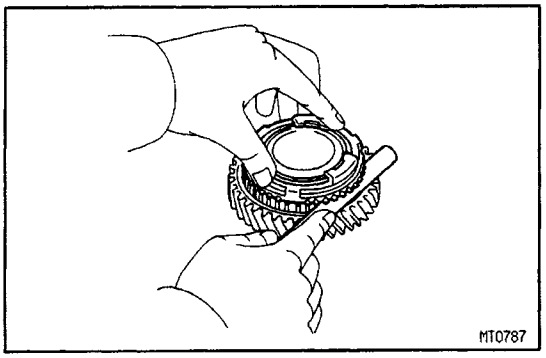

(c) Measure the clearance between the synchronizer ring back and gear spline end.

Minimum clearance:

0.7 mm (0.028 in.)

If the clearance is less than the limit, replace the synchronizer ring.

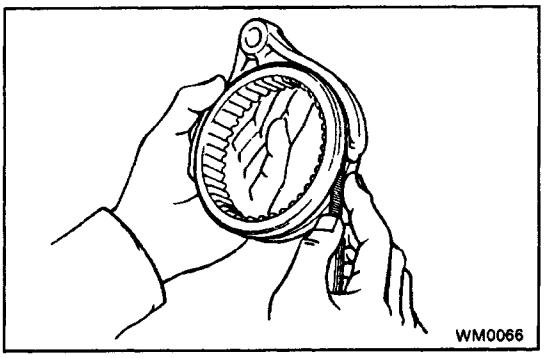

3. MEASURE CLEARANCE OF NO.1 SHIFT FORK AND: HUB SLEEVE

Using a feeler gauge, measure the clearance between the hub sleeve and shift fork.

Maximum clearance:

1.0 mm (0.039 in.)

If the clearance exceeds the limit, replace the shift fork or hub sleeve.

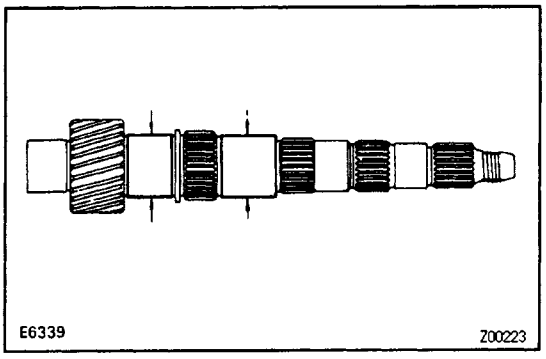

4. INSPECT OUTPUT SHAFT

(a) Check the output shaft for wear or damage.

(b) Using a micrometer, measure the outer diameter of the output shaft journal surface.

Minimum outer diameter:

38.950 mm (1.5335 in.)

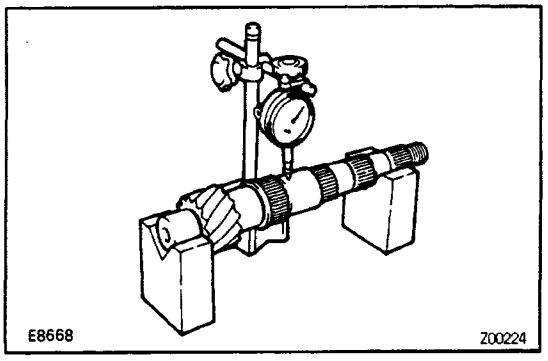

(c) Using a dial indicator, check the shaft runout.

Maximum runout:

0.06 mm (0.0024 in.)

MX01D–01

OUTPUT SHAFT ASSEMBLY

(See page MX2–44)

HINT: Coat all of the sliding and rotating surface with gear oil before assembly.

1. INSPECT N0.1 CLUTCH HUB INTO HUB SLEEVE

(a) Install the clutch hub and shifting keys to the hub sleeve.

(b) Install the shifting key springs under the shifting keys.

NOTICE: Install the key springs positioned so that their end not in line.

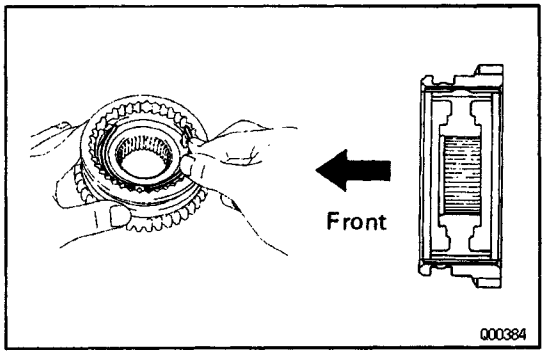

2. INSTALL NEEDLE ROLLER BEARING, FIRST GEAR, SYNCHRONIZER RING AND N0.1 HUB SLEEVE TO OUTPUT SHAFT

(a) Apply MP grease to the needle roller bearings.

(b) Install the 1st gear.

(c) Place the synchronizer ring (for 1st gear) on the gear and align the ring slots with the shifting keys.

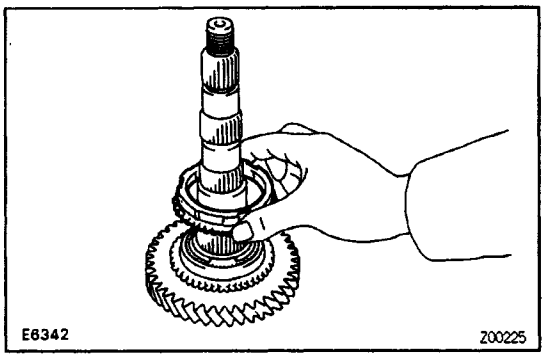

(d) Using SST and a press, install the 1 st gear and No. 1 hub sleeve.

SST 09316–60010 (09316–00040)

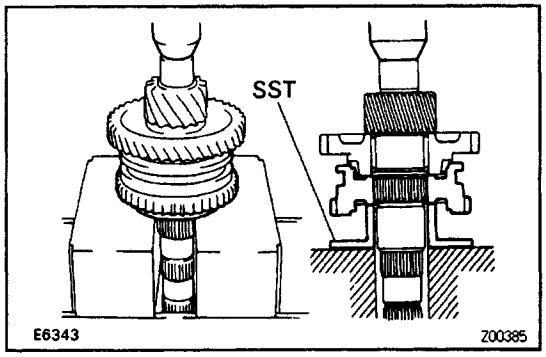

3. INSTALL SNAP RING

(a) Select a snap ring that will allow minimum axial play.

Mark	Thickness mm (in.)	Mark	Thickness mm (in.)
A	2.8.0 (0.1102)	**E**	3.00 (0.1181)
B	2.85 (0.1122)	**F**	3.05 (0.1201)
C	2.90 (0.1142)	**G**	3.10 (0.1220)
D	2.95 (0.1161)		

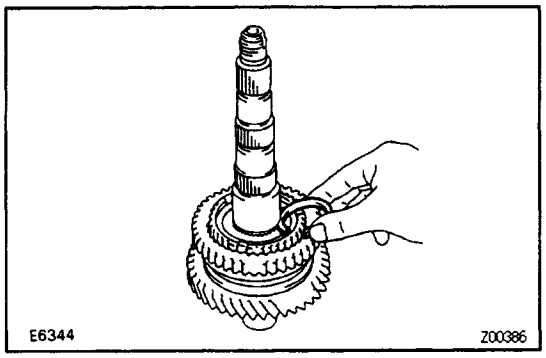

(b) Using a snap ring expander, install the snap ring.

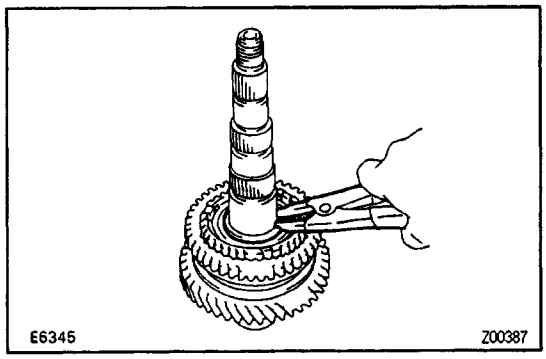

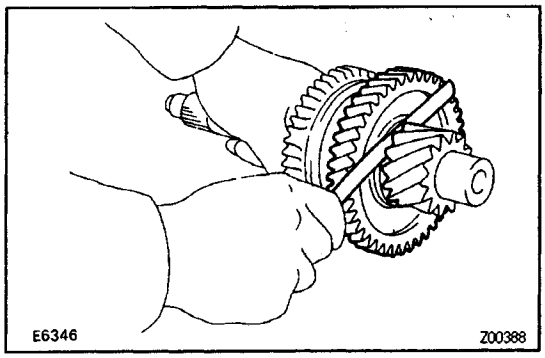

4. MEASURE FIRST GEAR THRUST CLEARANCE

Using a feeler gauge, measure the 1 st gear thrust clearance.

Standard clearance:

0.10–0.35 mm (0.0039–0.0138 in.)

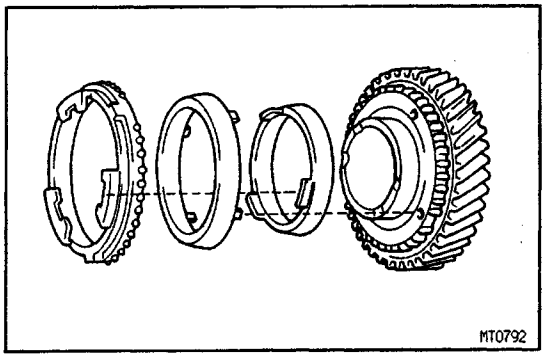

5. INSTALL SPACER, NEEDLE ROLLER BEARING, SYNCHRONIZER RINGS, SECOND GEAR AND THIRD DRIVEN GEAR

(a) Install the spacer.

(b) Apply MP grease to the needle roller bearing.

(c) Place the synchronizer rings (for 2nd gear) on the gear.

NOTICE: Do not install the synchronizer ring for 1st gear.

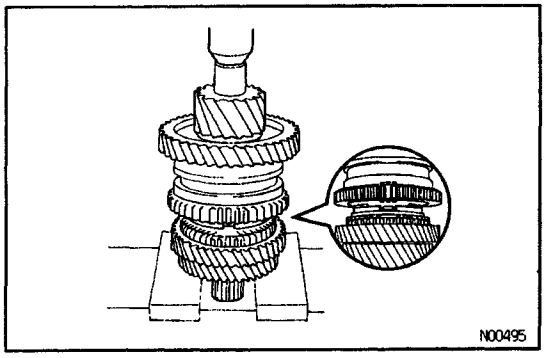

(d) Install the 2nd gear.

(e) Using a press, install the 3rd driven gear.

NOTICE: Align the clutch hub grooves with the project–thins on the synchronizer ring.

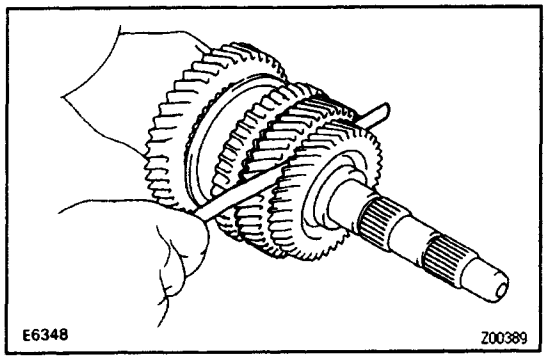

6. MEASURE SECOND GEAR THRUST CLEARANCE

Using a feeler gauge, measure the 2nd gear thrust clearance.

Standard clearance:

0.10–0.45 mm (0.0039–0.0177 in.)

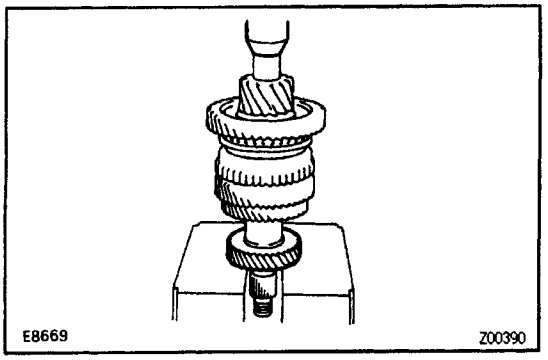

7. INSTALL SPACER AND FOURTH DRIVEN GEAR

(a) Install the spacer.

(b) Using a press, install the 4th driven gear.

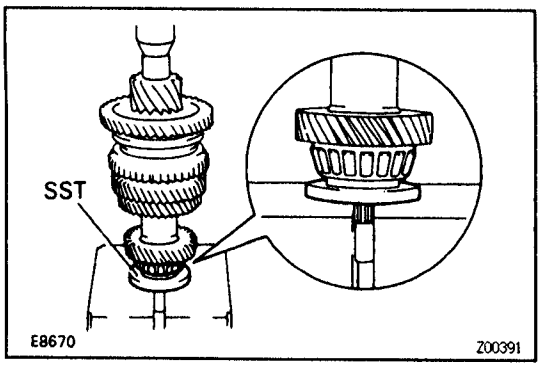

8. INSTALL OUTPUT SHAFT REAR BEARING

Using SST and a press, install the bearing.
SST 09506–30012

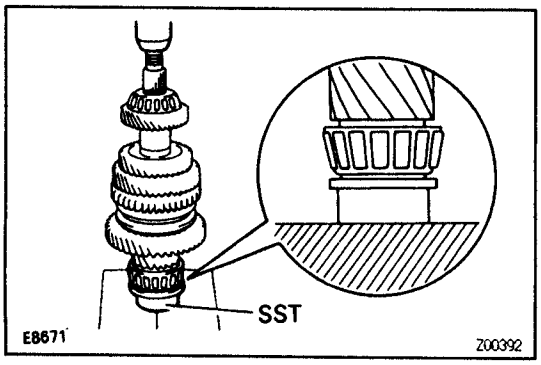

9. INSTALL OUTPUT SHAFT FRONT BEARING

Using SST and a press, install the output shaft front new bearing.
SST 09316–60010 (09316–00070)

PREPARATION

SST(SPECIAL SERVICE TOOLS)

MX018–02

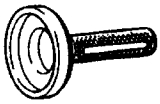	09223–15010 Crankshaft Rear Oil Seal Replacer	Differential case oil seal
	09308–00010 Oil Seal Puller	
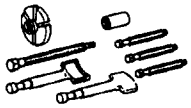	09310–17010 Transaxle Gear Remover & Replacer	
	(09310–07010) Plate	
	(09310–07020) Center Bolt	
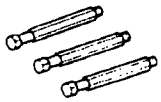	(09310–07030) Set Bolt	
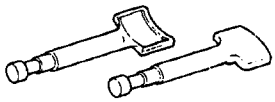	(09310–07040) Claw	
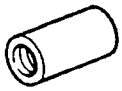	(09310–07050) Adaptor	
	09316–20011 Transfer Bearing Replacer	Input shaft bearing Side bearing
	09316–60010 Transmission & Transfer Bearing	No.1 hub sleeve Replacer Differential case taper roller bearing outer race Transaxle case cover oil seal
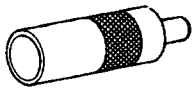	(09316–00010) Replacer Pipe	
	(09316 00020, Replace “A”	
	(09316–00040) Replacer “C”	

	(09316–00070) Replace “F”	
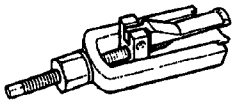	09319–60020 Output Shaft Needle Roller Bearing Remover	Control shaft cover bearing
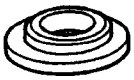	09508–30012 Differential Drive Pinion Rear Bearing Corrie Replacer	Output shaft rear bearing
	09506–35010 Differential Drive Pinion Rear Bearing Replacer	No.2 hub sleeve Side bearing Input shaft bearing
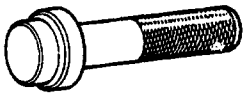	09517–36010 Rear Axle Shaft Oil Seal Replacer	Shift control shaft oil seal
	09608–12010 Front Hub & Drive Pinion Bearing Replacer Set	Input shaft oil seal
	(09608–00020) Remover & Replacer Handle	
	(09608–00060) Drive Pinion Front Bearing Cup Replacer	
	(09608–00080) Replacer	
	09612–65014 Steering Worm Bearing Puller	Input shaft bearing Differential taper roller bearing outer race
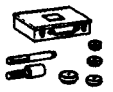	09620–30010 Steering Gear Box Replacer Set	Control shaft cover bearing
	09631–00020) Handle	
	09630–24013 Steering Rack Oil Seal Tool Set	Control shaft cover bearing
	(09620–24010) Valve Cup Oil Seal Remover	

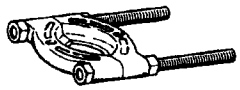	09950–00020 Bearing Remover	
	09950–00030 Bearing Remover Attachment	
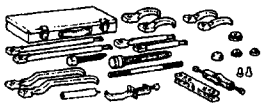	09950–20017 Universal Puller	

MX01T–02

RECOMMENDED TOOLS

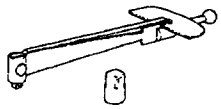	09025–00010 Small Torque Wrench	Differential preload
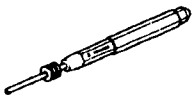	09031–00030 Pin Punch	
	09042–00050 Torx socket t45	
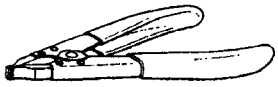	09905–00012 Snap Ring No. 1 Expander	

MX01U–01

EQUIPMENT

Dial indicator with magneticbase	
Feeler gauge	
Micrometer	
Straight edge	
Torque wrench	

MX013–02

LUBRICANT

Item	Capacity	Classification
Standard Type Manual transaxle oil (w/Differential oil)	4.2 liters (4.4 US qts, 3.7 Imp. qts)	API GL–3, GL–4 or GL–5 SAE 75W–90 or 80W–90
Viscous Coupling LSD Type Manual transaxle oil (w/Differential oil)	3.9 liters (4.1 US qts, 3.4 Imp. qts)	AN GL–3, GL–4 or GL–5 SAE 75W–90 or 80W–90

MX01V–02

SSM(SPECIAL SERVICE MATERIALS)

08826–00090 Seal Packing 1281, Three bond 1281 or equivalent	Transaxle case x Case cover Transmission case x Transaxle case Transmission case x Case cover
08833–00080 Adhesive 1344, THREE BOND 1344, LOCTITE 242 or equivalent	Transaxle case cover bolt Straight screw plug Control shaft cover bolt

SERVICE SPECIFICATIONS

SERVICE DATA

MX00Z–02

Input shaft 3rd and 4th gear journal diameter	
Limit	35.950 mm (1.4154 in.)
Input shaft 5th gear journal diameter	
Limit	27.950 mm (1.1004 in.)
Input shaft runout	
Limit	0.05 mm (0.0020 in.)
Output shaft 1 st and 2nd gear journal diameter	
Limit	38.950 mm (1.5335 in.)
Output shaft runout	
Limit	0.06 mm (0.0024 in.)
Gear thrust clearance 1 st	
STD	0.10 – 0.35 mm (0.0039 – 0.0138 in.)
Limit	0.40 mm (0.0157 in.)
Gear thrust clearance 2nd	
STD	0.10 – 0.45 mm (0.0039 – 0.0177 in.)
Limit	0.50 mm (0.0197 in.)
Gear thrust clearance 3rd	
STD	0.10 – 0.45 mm (0.0039 – 0.0177 in.)
Limit	0.50 mm (0.0197 in.)
Gear thrust clearance 4th	
STD	0.10 – 0.55 mm (0.0039 – 0.0217 in.)
Limit	0.60 mm (0.0236 in.)
Gear thrust clearance 5th	
STD	0.10 – 0.57 mm (0.0039 – 0.0224 in.)
Limit	0.65 mm (0.0256 in.)
Gear oil clearance 1 st	
STD	0.009 – 0.051 mm (0.0004 – 0.0020 in.)
Limit	0.070 mm (0.0028 in.)
Gear oil clearance 2nd	
STD	0.009 – 0.053 mm (0.0004 – 0.0021 in.)
Limit	0.070 mm (0.0028 in.)
Gear oil clearance 3rd	
STD	0.009 – 0.053 mm (0.0004 – 0.0021 in.)
Limit	0.070 mm (0.0028 in.)
Gear oil clearance 4th	
STD	0.009 – 0.051 mm (0.0004 – 0.0020 in.)
Limit	0.070 mm (0.0028 in.)
Gear oil clearance 5th	
STD	0.009 – 0.050 mm (0.0004 – 0.0020 in.)
Limit	0.070 mm (0.0028 in.)
Shift fork to hub sleeve clearance	
Limit	1.0 mm (0.039 in.)
Synchronizer ring to gear clearance 1 st, 4th and 5th	
Limit	0.6 mm (0.024 in.)
Synchronizer ring to gear clearance 2nd and 3rd	
Limit	0.7 mm (0.028 in.)

Input shaft snap ring thickness		
No.2 clutch hub	Mark H	2.30 mm (0.0906 in.)
No.2 clutch hub	Mark J	2.35 mm (0.0925 in.)
No.2 clutch hub	Mark K	2.40 mm (0.0945 in.)
No.2 clutch hub	Mark L	2.45 mm (0.0965 in.)
No.2 clutch hub	Mark M	2.50 mm (0.0984 in.)
No.2 clutch hub	Mark N	2.55 mm (0.1004 in.)
No.2 clutch hub	Mark P	2.60 mm (0.1024 in.)
No.3 clutch hub	Mark Cl	2.25 mm (0.0886 in.)
No.3 clutch hub	Mark R	2.30 mm (0.0906 in.)
No.3 clutch hub	Mark S	2.35 mm (0.0925 in.)
No.3 clutch hub	Mark T	2.40 mm (0.0945 in.)
No.3 clutch hub	Mark U	2.45 mm (0.0965 in.)
No.3 clutch hub	Mark V	2.50 mm (0.0984 in.)
No.3 clutch hub	Mark W	2.55 mm (0.1004 in.)
No.3 clutch hub	Mark X	2.60 mm (0.1024 in.)
No.3 clutch hub	Mark *	2.65 mm (0.1043 in.)
Ball bearing	Mark 1	2.35 mm (0.0925 in.)
Ball bearing	Mark 2	2.40 mm (0.0945 in.)
Ball bearing	Mark 3	2.45 mm (0.0965 in.)
Ball bearing	Mark 4	2.50 mm (0.0984 in.)
Ball bearing	Mark 5	2.55 mm (0.1004 in.)
Ball bearing	Mark 6	2.60 mm (0.1024 in.)
Ball bearing	Mark 7	2.65 mm (0.1043 in.)
Ball bearing	Mark 8	2.70 mm (0.1063 in.)
Output shaft snap ring thickness		
No.1 clutch hub	Mark A	2.80 mm (0.1102 in.)
No.1 clutch hub	Mark6	2.85 mm (0.1122 in.)
No.1 clutch hub	Mark C	2.90 mm (0.1142 in.)
No. 1 clutch hub	Mark D	2.95 mm (0.1161 in.)
No.1 clutch hub	Mark E	3.00 mm (0.1181 in.)
No.1 clutch hub	Mark F	3.05 mm (0.1201 in.)
No.1 clutch hub	Mark G	3.10 mm (0.1220 in.)
Oil pump body clearance		
	STD	0.10 – 0.16 mm (0.0039 – 0.0063 in.)
	Limit	0.30 mm (0.0118 in.)
Oil pump tip clearance		
	STD	0.08 – 0.15 mm (0.0031 – 0.0059 in.)
	Limit	0.30 mm (0.0118 in.)
Oil pump side clearance		
	STD	0.03 – 0.08 mm (0.0012 – 0.0031 in.)
	Limit	0.15 mm (0.0059 in.)
Control shaft cover oil seal drive in depth		0 – 1.0 mm (0 – 0.039 in.)

Differential pinion to side gear backlash	0.05 – 0.20 mm (0.0020 – 0.0079 in.)
Differential side gear thrust washer thickness	
None Mark	0.80 mm (0.0315 in.)
None Mark	0.90 mm (0.0354 in.)
None Mark	1.00 mm (0.0394 in.)
None Mark	1.10 mm (0.0433 in.)
None Mark	1.20 mm (0.0472 in.)
None Mark	1.30 mm (0.0512 in.)
None Mark	1.40 mm (0.0551 in.)
Differential case side bearing preload (at starting)	
New bearing (add output shaft preload)	0.2 – 0.4 N·m (2.0 – 4.1 kgf·cm, 1.7 – 3.6 in.·lbf)
Reused bearing (add output shaft preload)	0.1 – 0.2 N·m (1.3 – 2.5 kgf·cm, 1.1 – 2.2 in.·lbf)
Differential side bearing adjusting shim thickness	
Mark 0	2.00 mm (0.0787 in.)
Mark 1	2.05 mm (0.0807 in.)
Mark 2	2.10 mm (0.0827 in.)
Mark 3	2.15 mm (0.0846 in.)
Mark 4	2.20 mm (0.0866 in.)
Mark 5	2.25 mm (0.0886 in.)
Mark 6	2.30 mm (0.0906 in.)
Mark 7	2.35 mm (0.0925 in.)
Mark 8	2.40 mm (0.0945 in.)
Mark 9	2.45 mm (0.0965 in.)
Mark A	2.50 mm (0.0984 in.)
Mark B	2.55 mm (0.1004 in.)
Mark C	2.60 mm (0.1024 in.)
Mark D	2.65 mm (0.1043 in.)
Mark E	2.70 mm (0.1063 in.)
Mark F	2.75 mm (0.1083 in.)
Mark G	2.80 mm (0.1102 in.)
Mark H	2.85 mm (0.1122 in.)
Output shaft bearing preload (at starting)	
New bearing	0.8 – 1.6 N·m (8 – 16 kgf·cm, 6.9 – 13.9 in.·lbf)
Reused bearing	0.5 – 1.0 N·m (5 – 10 kgf·cm, 4.3 – 8.7 in.·lbf)

Output shaft rear bearing adjusting shim thickness	
Mark 0	1.30 mm (0.0512 in.)
Mark 1	1.35 mm (0.0531 in.)
Mark 2	1.40 mm (0.0551 in.)
Mark 3	1.45 mm (0.0571 in.)
Mark 4	1.50 mm (0.0591 in.)
Mark 5	1.55 mm (0.0610 in.)
Mark 6	1.60 mm (0.0630 in.)
Mark 7	1.65 mm (0.0650 in.)
Mark 8	1.70 mm (0.0669 in.)
Mark 9	1.75 mm (0.0689 in.)
Mark A	1.80 mm (0.0709 in.)
Mark B	1.85 mm (0.0728 in.)
Mark C	1.90 mm (0.0748 in.)
Mark D	1.95 mm (0.0768 in.)
Mark E	2.00 mm (0.0787 in.)
Mark F	2.05 mm (0.0807 in.)
Mark G	2.10 mm (0.0827 in.)
Mark H	2.15 mm (0.0846 in.)
Mark J	2.20 mm (0.0866 in.)
Mark K	2.25 mm (0.0886 in.)
Mark L	2.30 mm (0.0906 in.)
Mark M	2.35 mm (0.0925 in.)
Mark N	2.40 mm (0.0945 in.)
Mark P	2.45 mm (0.0965 in.)
Mark 0	2.50 mm (0.0984 in.)

MX010–03

TORQUE SPECIFICATIONS

Part tightened	N–m	kgf–cm	ft–lbf
Transaxle x Engine			
12 mm bolt	64	650	47
10 mm bolt	46	470	34
Rear end plate set bolt	9	95	82 in.·lbf
Stiffener plate x Engine	37	380	27
Stiffener plate x Transaxle	37	380	27
Engine LH mounting set bolt	64	650	47
Suspension crossmember x Body	113	1,150	83
Suspension arm x Rear axle hub	103	1,050	76
Lower arm x Suspension crossmember	132	1,350	98
Engine rear mounting x Transaxle	77	790	57
Engine rear mounting x Crossmember	64	650	47
Engine rear mounting through bolt	87	890	64
Clutch release cylinder x Transaxle	12	120	9
Engine front mounting x Transaxle	77	790	57
Engine front mounting x Body	73	740	54
Engine front mounting through bolt	96	980	71
Front exhaust pipe x Tail Pipe	62	630	46
Front exhaust pipe x Exhaust manifold	62	630	46
Transaxle x Starter	39	400	29
LH engine mounting stay x Body	73	740	54
LH engine mounting stay x Transaxle	25	250	18
Strut bar x Body (Bolt)	73	740	54
Strut bar x Body (Nut)	64	650	47
Transaxle x Transaxle case receiver	7.4	75	65 in.·lbf
Oil pump x Cover	10	105	8
Transaxle case x Transaxle case cover	54	550	40
Differential ring gear x Differential case	124	1,260	91
Transaxle case x Oil pump	17	175	13
Transaxle case x Transmission case	29	300	22
Reverse idler gear shaft retaining bolt	29	300	22
Transmission case x Rear bearing retainer	42	430	31
5th driven gear lock nut	123	1,250	90
Transmission case x Transmission case cover	29	300	22
Shift and select lever shaft assembly x Transmission case	20	200	14
Shift lever lock bolt	49	500	36
Breather plug	49	500	36
Selecting bellcrank assembly x Transmission case	20	200	14
Back–up light switch	40	410	30
Vehicle speed pulse generator set bolt	7.4	75	65 in.·lbf
Shift fork set bolt	24	240	17
Screw plug	25	250	18
Reverse shift arm bracket x Transaxle case	17	175	13
No.2 oil pipe x Transaxle case	17	175	13

SHIFT AND SELECT LEVER SHAFT

COMPONENTS

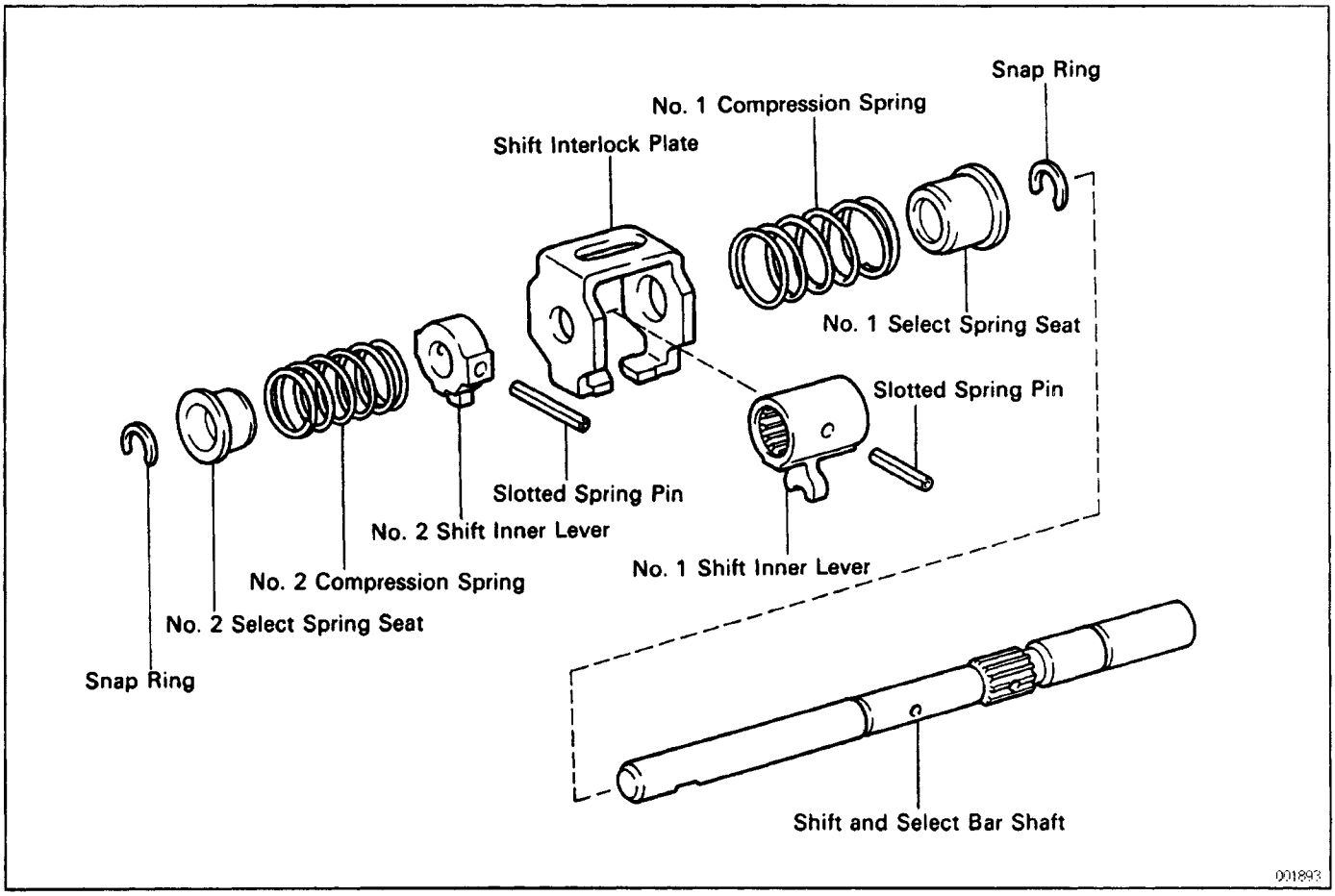

MX04Y - 01

SHIFT AND SELECT LEVER SHAFT DISASSEMBLY

1. REMOVE N0.2 SHIFT INNER LEVER

(a) Using a pin punch and hammer, drive out the slotted spring pin.

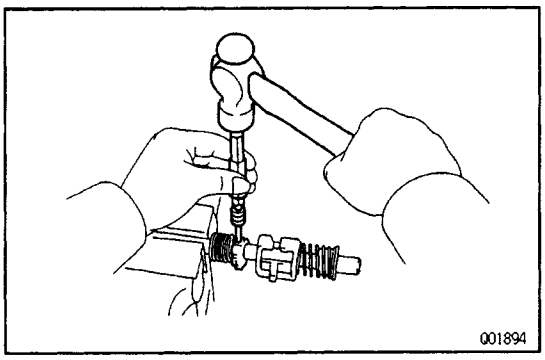

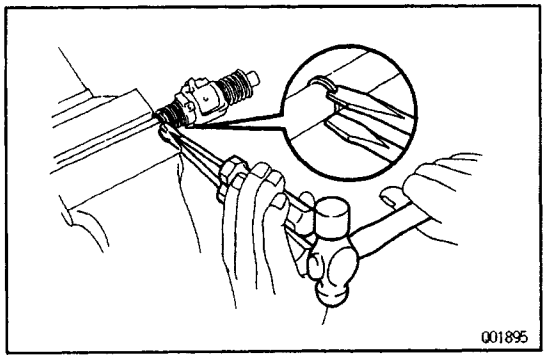

(b) Using two screwdrivers and a hammer, remove the snap ring.

(c) Remove the No.2 select spring seat, No.2 compres–sion spring and No.2 shift inner levee.

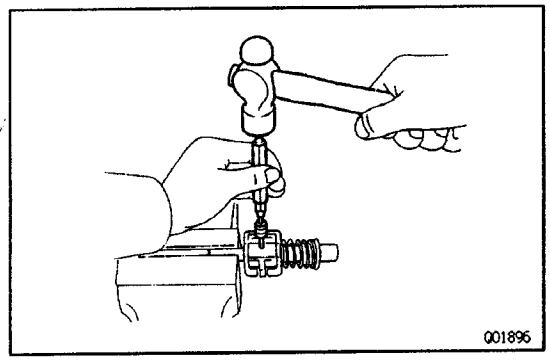

2. REMOVE SHIFT INTERLOCK PLATE AND NO. 1 SHIFT INNER LEVER

(a) Using a pin 'punch and hammer, drive out the slotted spring pin.

(b) Remove the shift interlock plate, No. shift inner lever, No.1 compression spring and No. select spring seat.

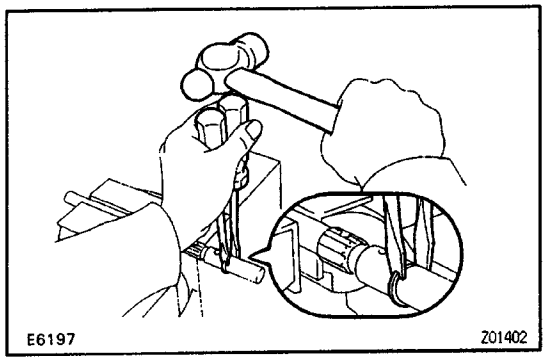

3. REMOVE SNAP RING

Using two screwdrivers and a hammer, remove the snap ring.

MX04Z–01

SHIFT AND SELECT LEVER SHAFT ASSEMBLY

(See page MX2–56)

1. APPLY MP GREASE TO PARTS, AS SHOWN

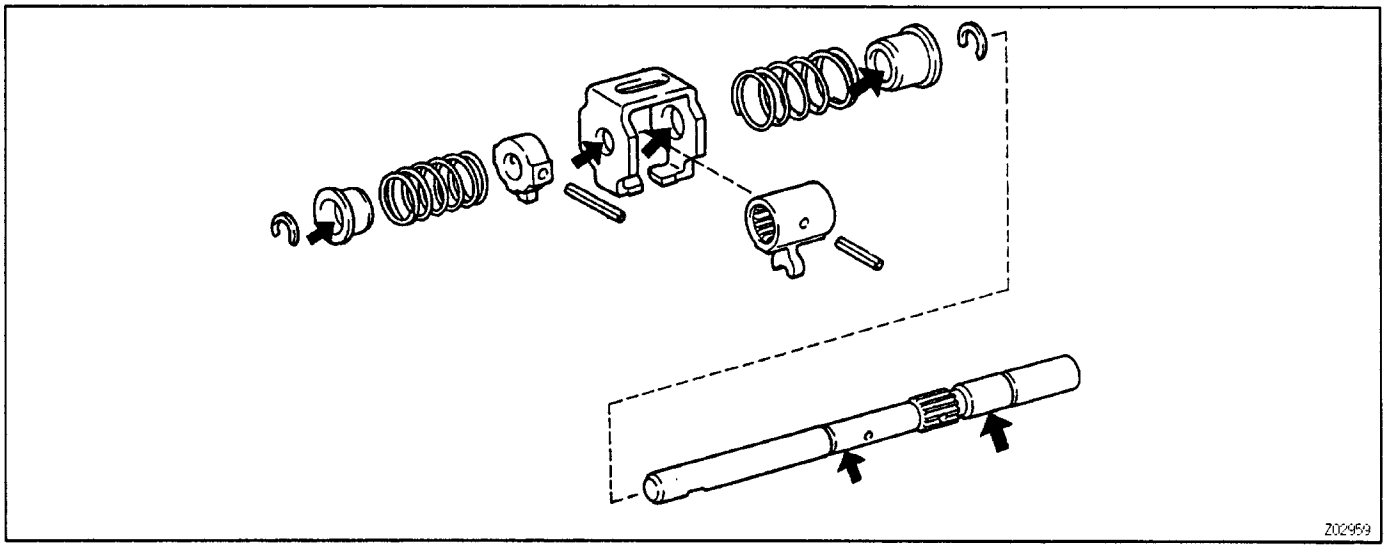

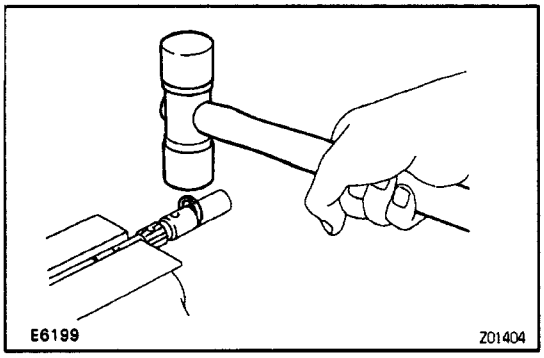

2. INSTALL SNAP RING

Using a plastic hammer, install the snap ring.

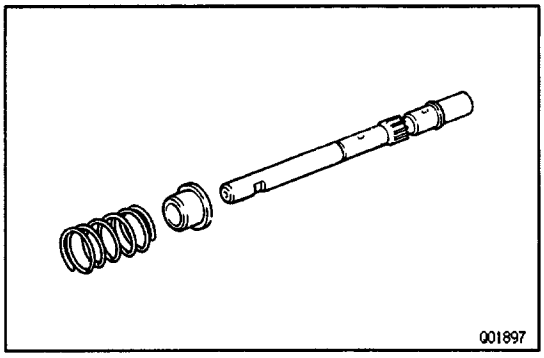

3. INSTALL SHIFT INTERLOCK PLATE AND NO. 1 SHIFT INNER LEVER

(a) Install the No.1 select spring seat and No.1 compression spring.

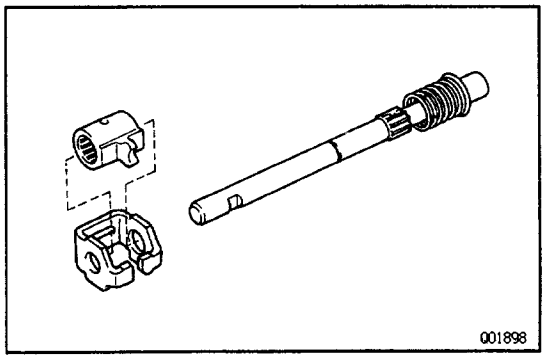

(b) Install the shift interlock plate and No.1 shift inner lever.

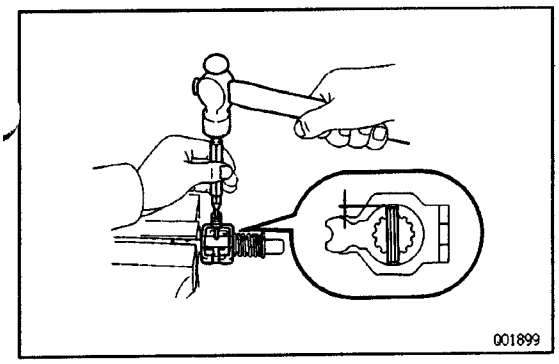

(c) Using a pin punch and hammer, drive in the slotted spring pin.
(d) Check that the shift interlock plate turn smoothly.

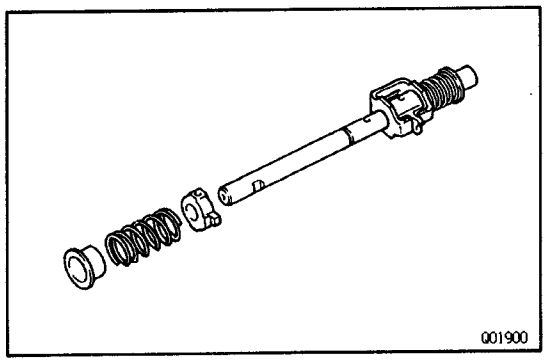

4. INSTALL NO.2 SHIFT INNER LEVER

(a) Install the No.2 shift inner lever, No.2 compression spring and No.2 select spring seat.

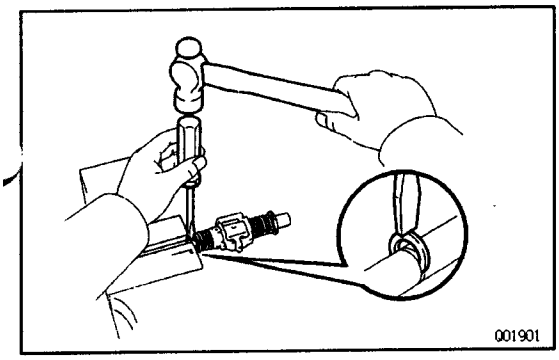

(b) Using a screwdriver and hammer, install the snap ring.

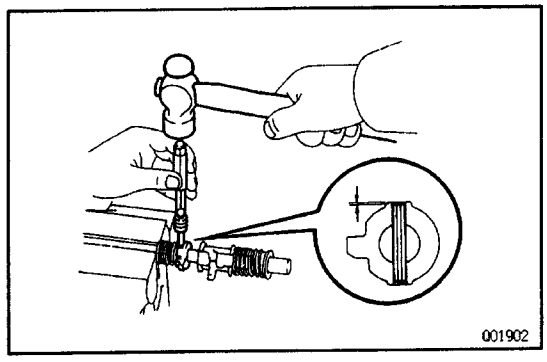

(c) Using a pin punch and hammer, drive in the slotted spring pin.
(d) Check that the No.2 select spring seat slides smoothly.

SHIFT LEVER AND CONTROL CABLE

COMPONENTS

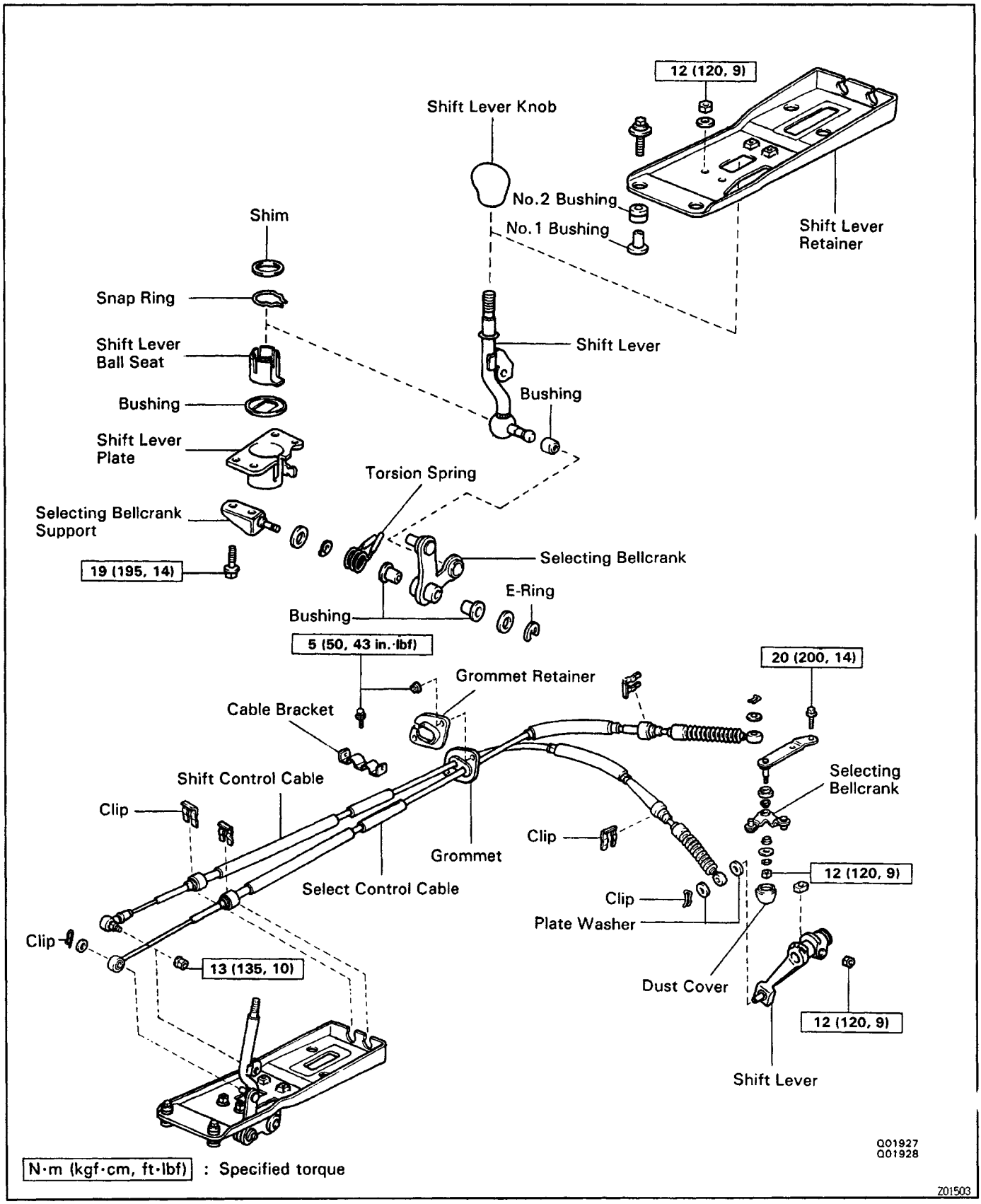

MX052–01

INSPECTION OF SHIFT LEVER

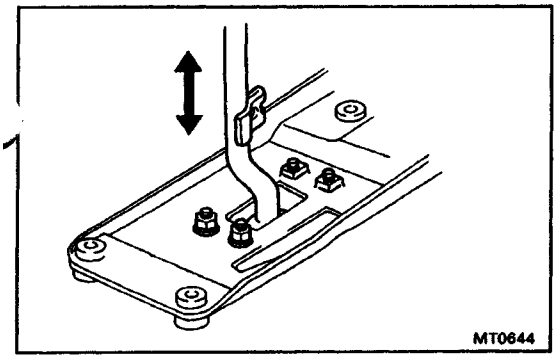

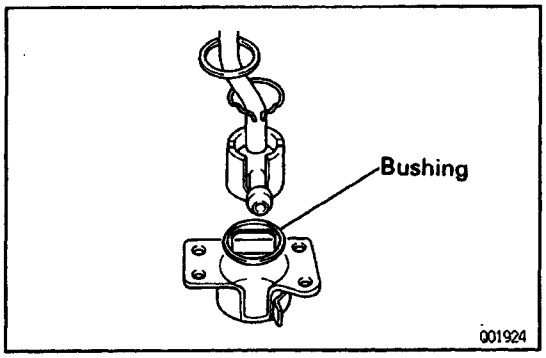

INSPECT SHIFT LEVER PLAY

Check that there is no vertical play in the shift lever.
If there is any play, replace bushing.

TROUBLESHOOTING

You will find the troubles easier using the table well shown below. In this table, each number shows the priority of causes in troubles. Check each part in order. If necessary, replace these parts.

See Page / Parts Name / Trouble	—	MX2–2	—	MX2–20	MX2–20	MX2–20	MX2–98	MX2–20	MX2–20	MX2–20	MX2–20	MX2–38,44	MX2–38,44			
	Oil (Level low)	Oil (Wrong)	Oil (Level too high)	Gasket (Damaged)	Oil seal (Worn or damaged)	O–Ring (Worn or damaged)	Control cable (Faulty)	Locking ball spring (Damaged)	Shift fork (Worn)	Gear (Worn or damaged)	Bearing (Worn or damaged)	Synchronizer ring (Worn or damaged)	Shifting key spring (Damaged)			
Noise	1	2								3	3					
Oil leakage			1	2	2	3										
Hard to shift or will not shift							1					2	3			
Jumps out of gear								1	2	3	3					

W0010

ASSEMBLY REMOVAL AND INSTALLATION

Removal and installation the parts as shown below.

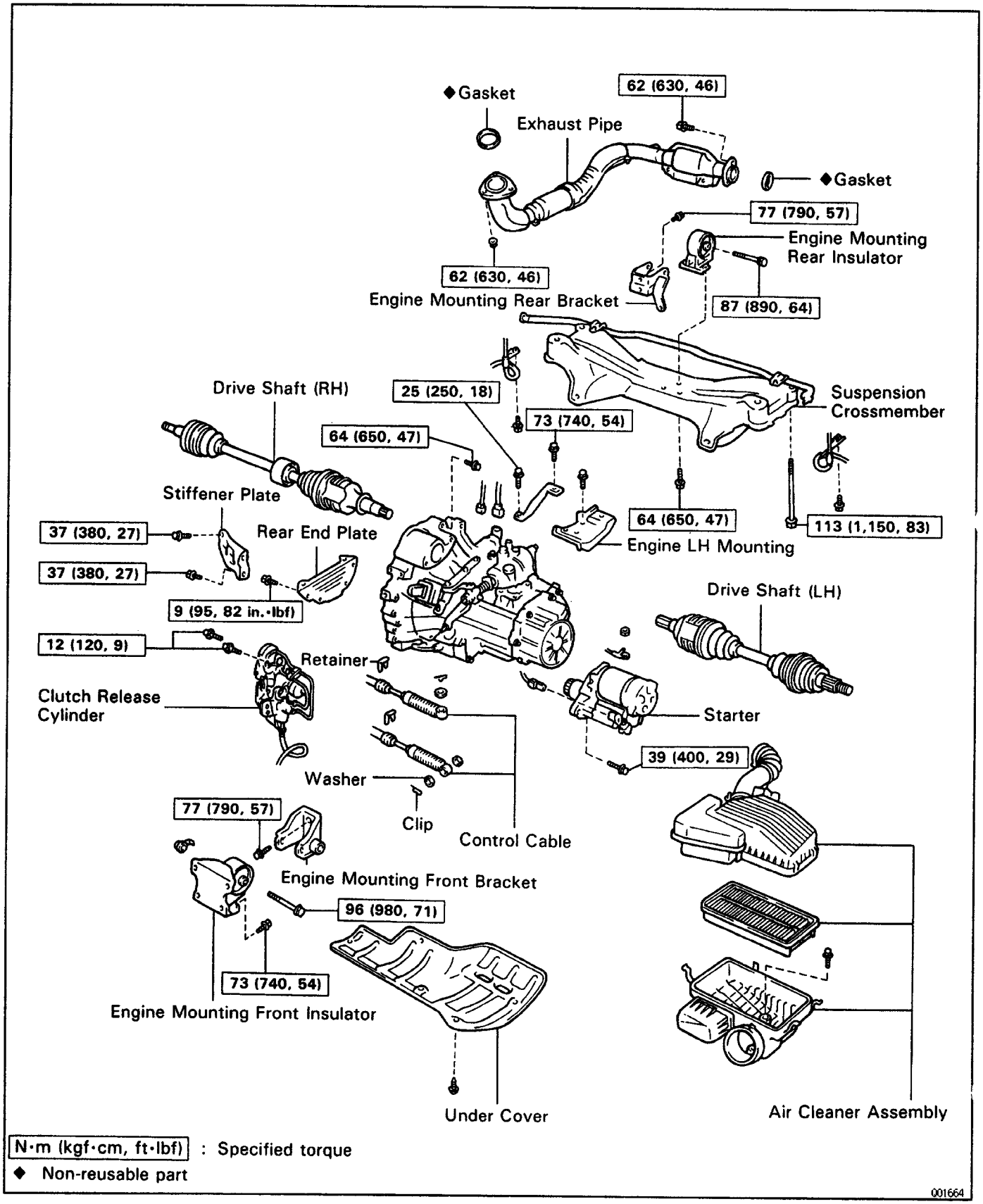

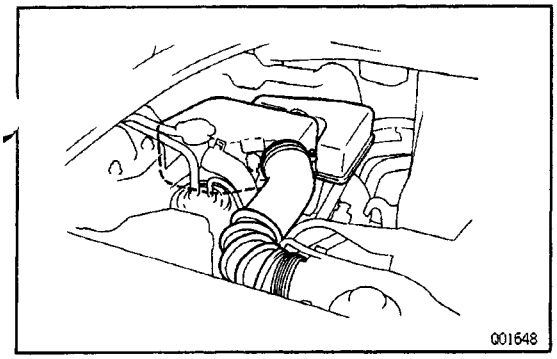

TRANSAXLE REMOVAL

1. REMOVE NEGATIVE BATTERY CABLE

2. REMOVE AIR CLEANER HOUSING ASSEMBLY WITH AIR HOSE

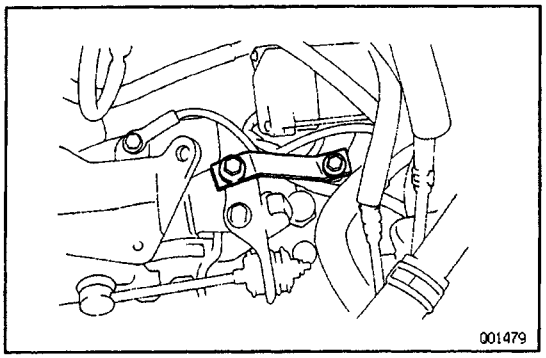

3. REMOVE LH ENGINE MOUNTING STAY

Remove the two bolts and mounting stay.

4. REMOVE STARTER

(a) Disconnect the connector and wire from the starter.

(b) Remove the two bolts and starter.

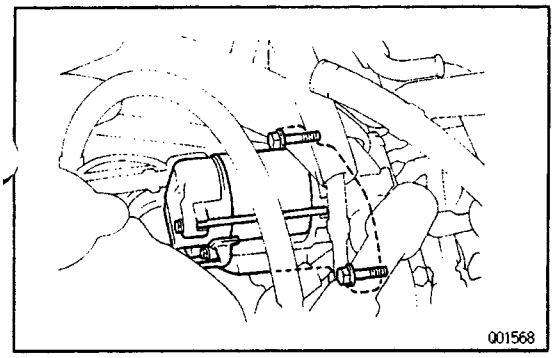

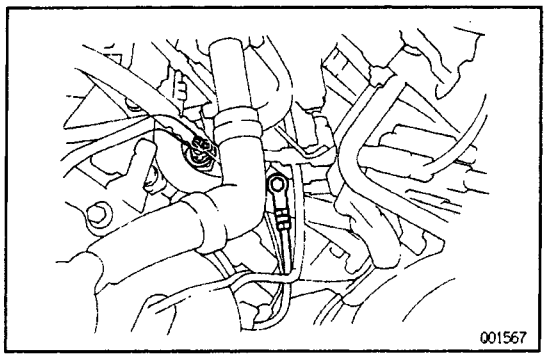

5. DISCONNECT BACK – UP LIGHT SWITCH CONNECTOR AND EARTH CABLE

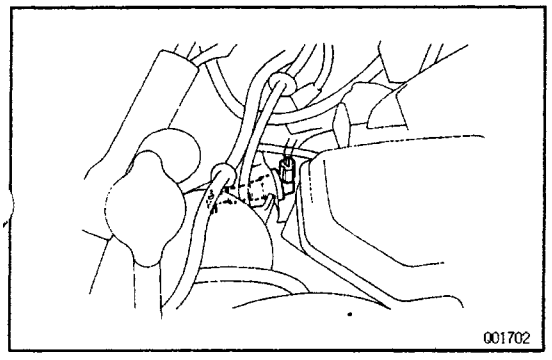

6. DISCONNECT SPEED SENSOR CONNECTOR

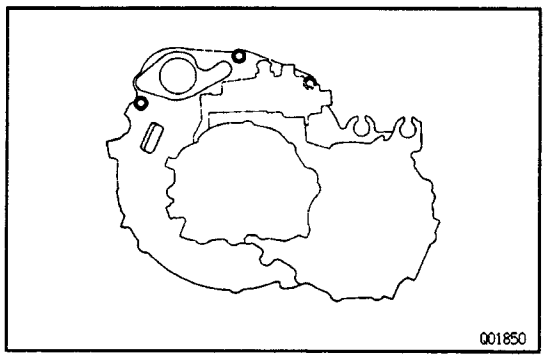

7. REMOVE TRANSAXLE MOUNTING THREE BOLTS OF TRANSAXLE CASE UPPER SIDE

8. REMOVE REAR WHEELS

9. RAISE VEHICLE

NOTICE: Be sure the vehicle is securely supported.

10. REMOVE UNDER COVER

Remove the five bolts and under cover.

11. DRAIN TRANSAXLE OIL

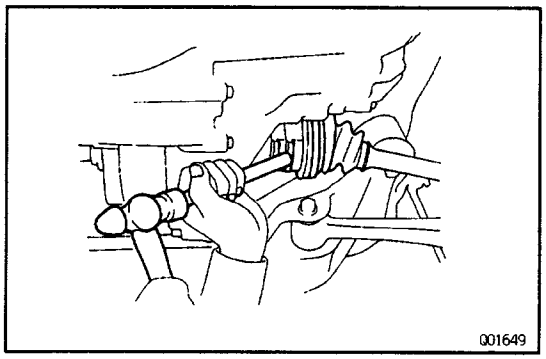

12. REMOVE DRIVE SHAFT

(See page SA–54)

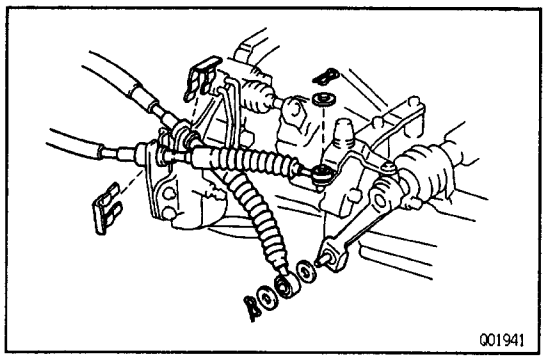

13. DISCONNECT CONTROL CABLES

(a) Remove the clips and washers.

(b) Remove the retainer from the cables.

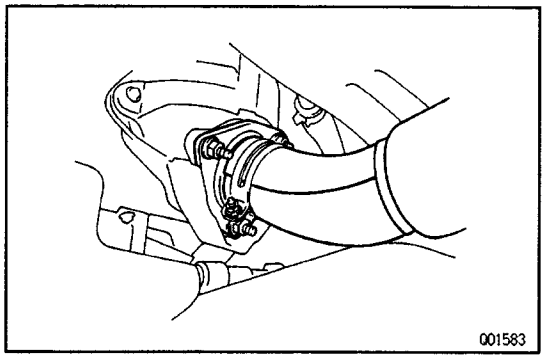

14. REMOVE EXHAUST PIPE

(a) Remove the three nuts.

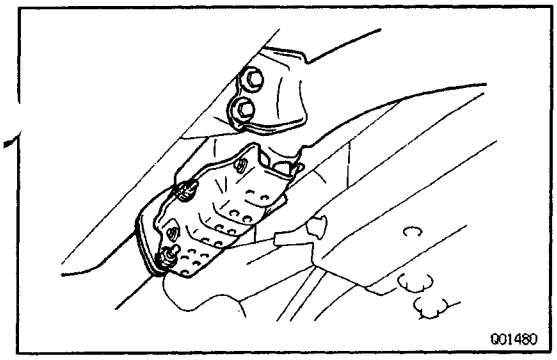

(b) Remove the four bolts.
(c) Remove exhaust pipe and two gaskets.

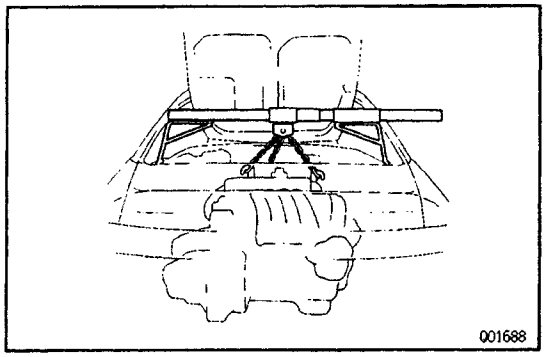

15. INSTALL ENGINE SUPPORT FIXTURE

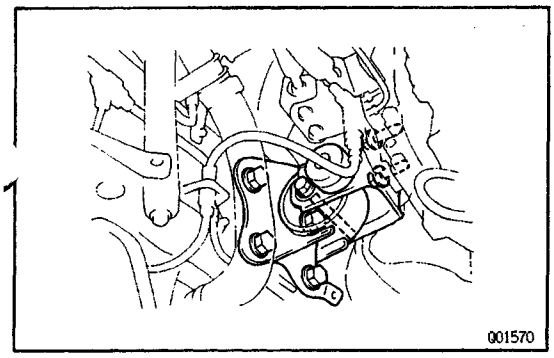

16. REMOVE ENGINE FRONT MOUNTING

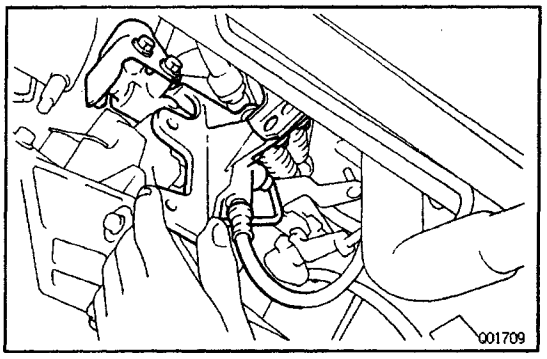

17. REMOVE CLUTCH RELEASE CYLINDER

Remove the two bolts and clutch release cylinder.

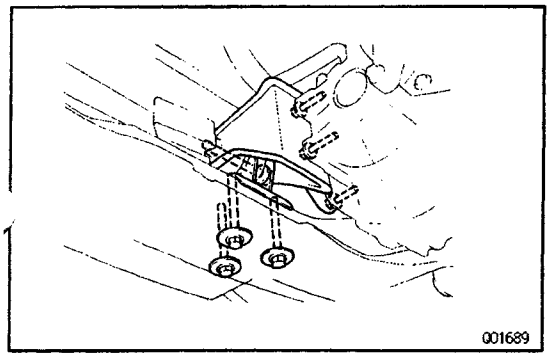

18. REMOVE ENGINE REAR MOUNTING

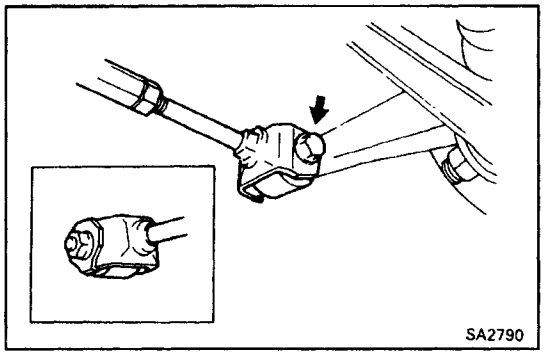

19. REMOVE SUSPENSION CROSSMEMBER

(a) Remove the bolt, nut and suspension arm from rear axle hub.

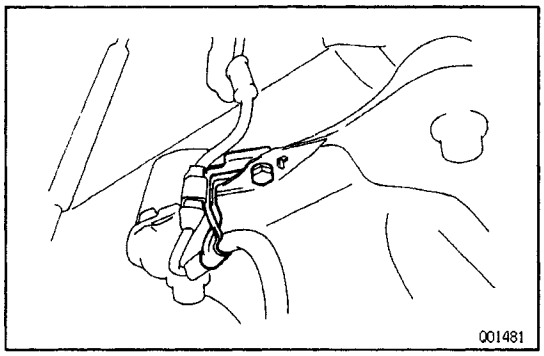

(b) Remove the bolt and disconnect the speed sensor bracket from the rear suspension crossmember.

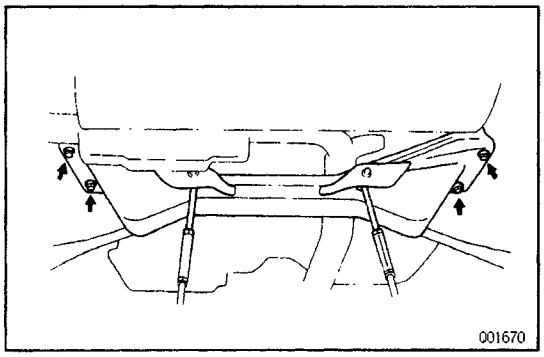

(c) Remove the four bolts and suspension crossmember.

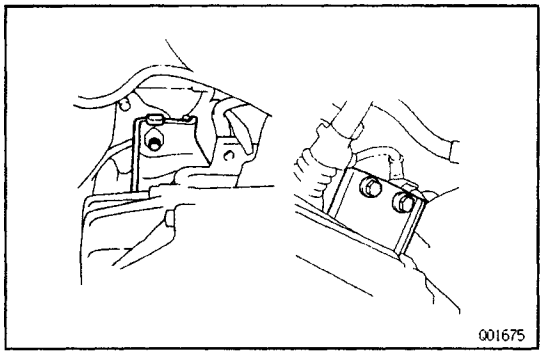

20. REMOVE ENGINE LH MOUNTING SET BOLTS

(a) Raise the transaxle and engine slightly with a jack and wooden block in between.

(b) Remove the three bolts.

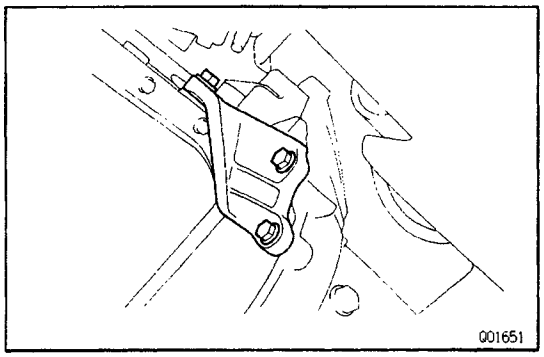

21. REMOVE STIFFENER PLATE

Remove the three bolts and stiffener plate.

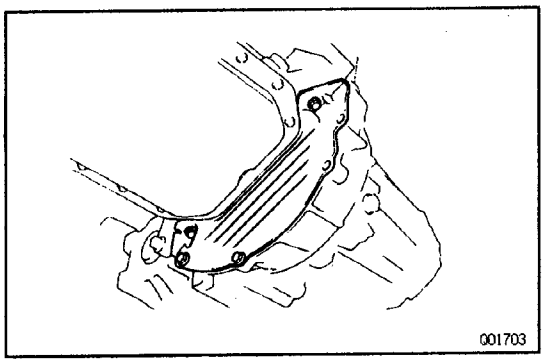

22. REMOVE REAR END PLATE

Remove the four bolts and rear end plate.

23. REMOVE TRANSAXLE

(a) Remove the transaxle mounting bolts from the engine.

(b) Lower the engine left side and remove the transaxle from the engine.

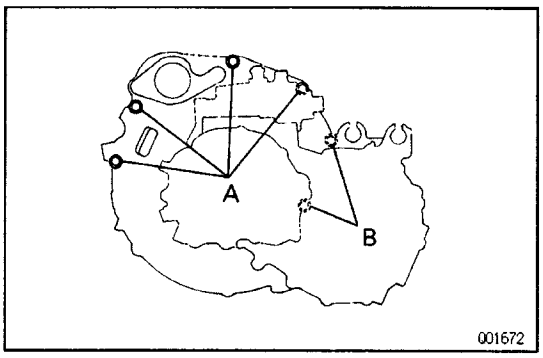

TRANSAXLE INSTALLATION

MX04M–01

(See page MX1–8)

1. INSTALL TRANSAXLE TO ENGINE

Align the input shaft spline with the clutch disc and install the transaxle to the engine.

Bolt A

Torque: 64 N–m (650 kgf–cm, 47 ft–lbf)

Bolt B

Torque: 46 N–m (470 kgf–cm, 34 ft–lbf)

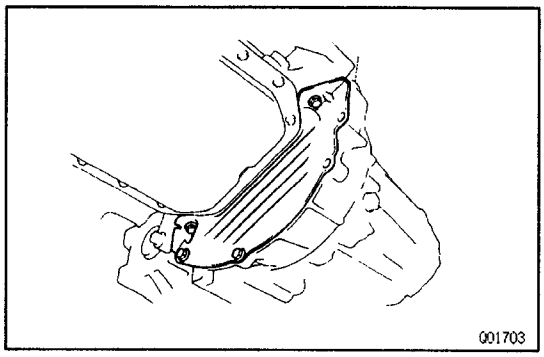

2. INSTALL REAR END PLATE

Install the rear end plate and torque the four bolts.

Torque: 9 N–m (95 kgf–cm, 82 in.–lbf)

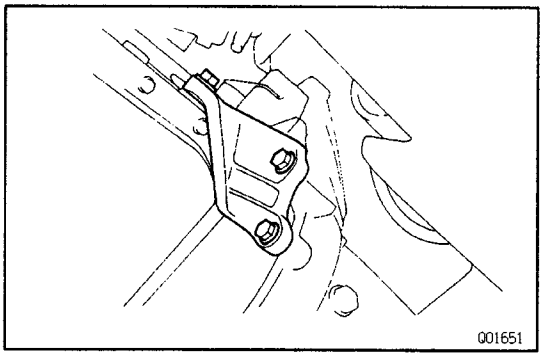

3. REMOVE STIFFENER PLATE

Install the stiffener plate with three bolts.

Torque: 37 N–m (380 kgf–cm, 27 ft–lbf)

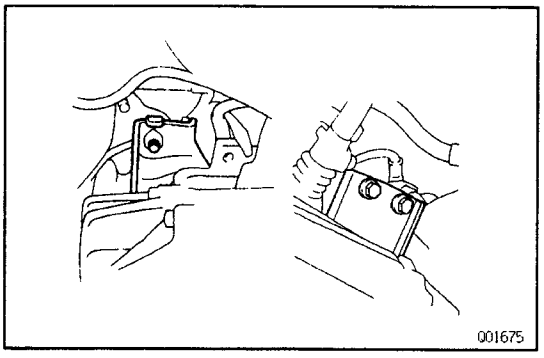

4. INSTALL ENGINE LH MOUNTING SET BOLTS

Raise the engine left side and install the three set bolts.

Torque: 64 N–m (650 kgf–cm, 47 ft–lbf)

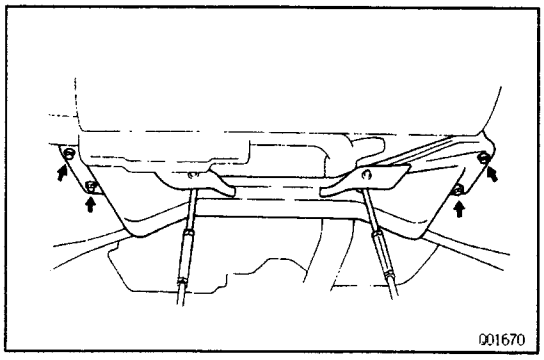

5. INSTALL SUSPENSION CROSSMEMBER

(a) Install the suspension crossmember in place, then install and tighten the four– bolts.

Torque: 113 N–m (1,150 kgf–cm, 83 ft–lbf)

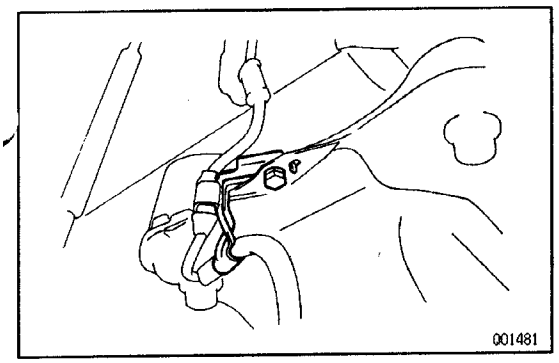

(b) Install the speed sensor bracket to suspension crossmember.

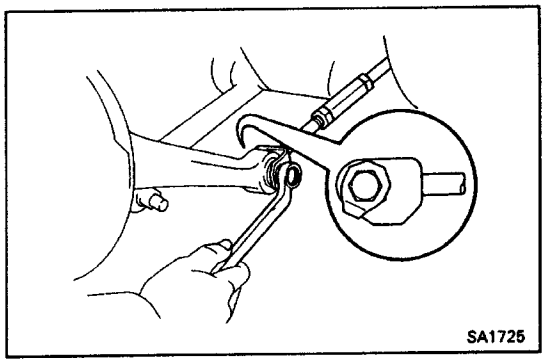

(c) Install the suspension arm with bolt and nut to rear axle hub.

Torque; 103 N–m (1,050 kgf–cm, 76 ft–lbf)

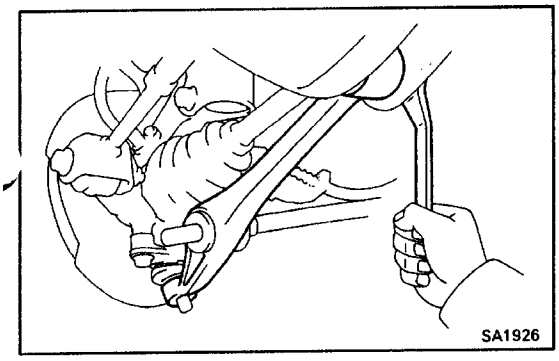

(d) Install the lower arm with bolt to suspension cross–member.

Torque: 132 N–m (1,350 kgf–cm, 98 ft–lbf)

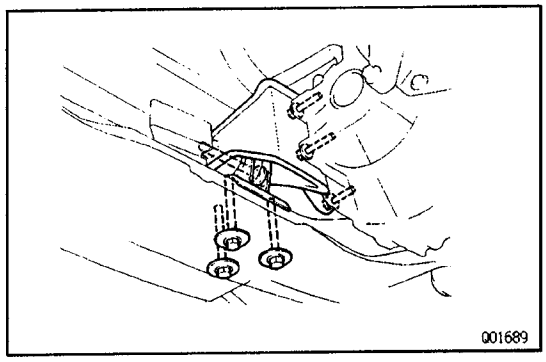

6. INSTALL ENGINE REAR MOUNTING

Transaxle side

Torque: 77 N–m (790 kgf–cm, 57 ft–lbf)

Crossmember side

Torque: 64 N–m (650 kgf–cm, 47 ft–lbf)

Through bolt

Torque: 87 N–m (890 kgf–cm, 64 ft–lbf)

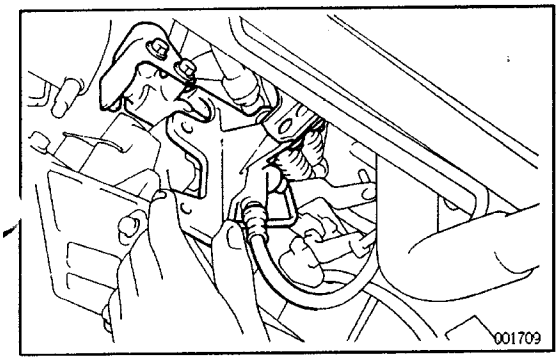

7. INSTALL CLUTCH RELEASE CYLINDER

Place the release cylinder and torque the two bolts.

Torque: 12 N–m (120 kgf–cm, 9 ft–lbf)

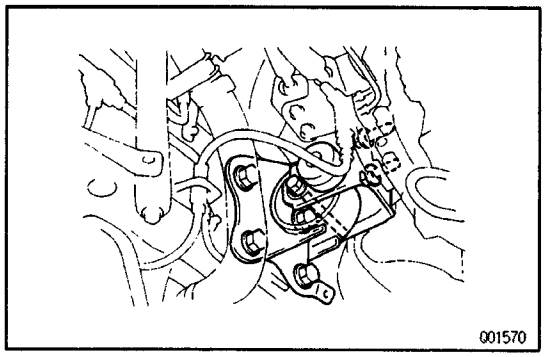

8. INSTALL ENGINE FRONT MOUNTING

Transaxle side

Torque: 77 N–m (790 kgf–cm, 57 ft–lbf)

Body side

Torque: 73 N–m (740 kgf–cm, 54 ft–lbf)

Through bolt

Torque: 96 N–m (980 kgf–cm, 71 ft–lbf)

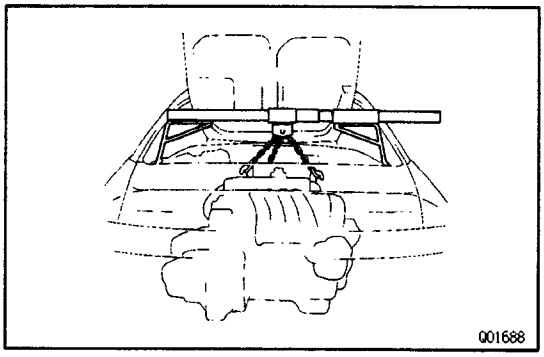

9. REMOVE ENGINE SUPPORT FIXTURE

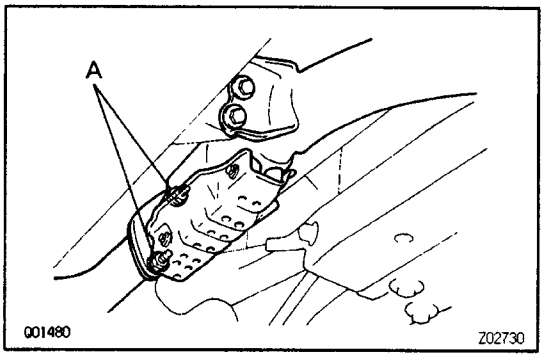

10. INSTALL EXHAUST PIPE

(a) Install the two new gaskets and exhaust pipe.

(b) Install the four bolts.

(c) Torque the “A” bolts.

Torque: 62 N–m (630 kgf–cm, 46 ft–lbf)

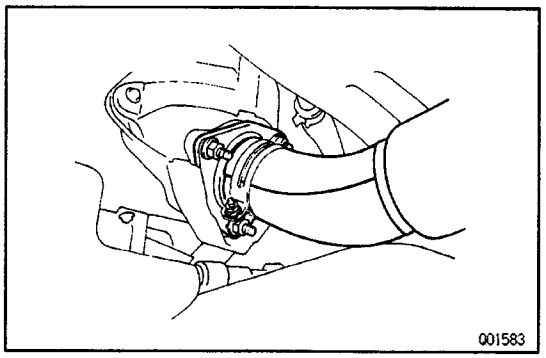

(d) Install and torque the three nuts.

Torque: 62 N–m (630 kgf–cm, 46 ft–lbf)

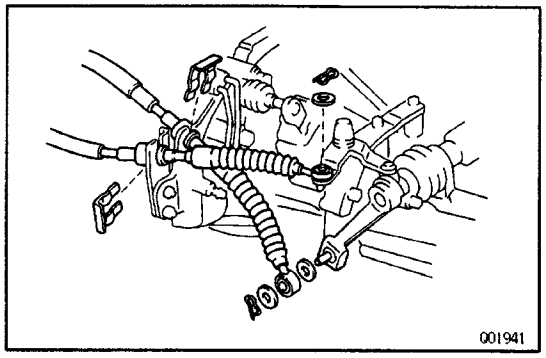

11. CONNECT CONTROL CABLES

(a) Install the retainer to the cables.

(b) Connect the cables to the linkage with the washers and clips.

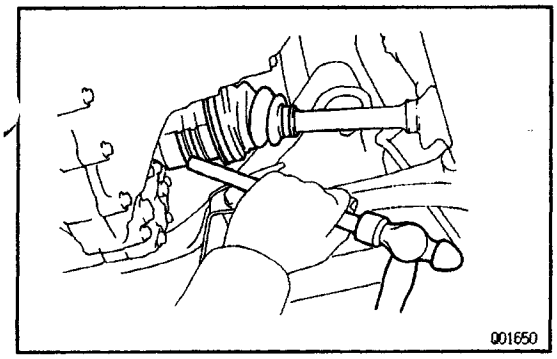

12. INSTALL DRIVE SHAFT
(See page SA–54)

13. FILL TRANSAXLE WITH GEAR OIL
Oil:
Gear oil super (08885–02106) or equivalent
Recommended oil
oil grade:
API GL–3, GL–4 or GL–5
Viscosity:
SAE 75 W–90
Above –18˚ C
(0˚F) SAE 90
Below –18˚ C (0˚ F) SAE 75 W
Capacity:
2.6 Litters (2.7 US qts, 2.3 lmp.qts)

14. INSTALL UNDER COVER
Install the under cover and five bolts.

15. INSTALL REAR WHEELS AND LOWER VEHICLE

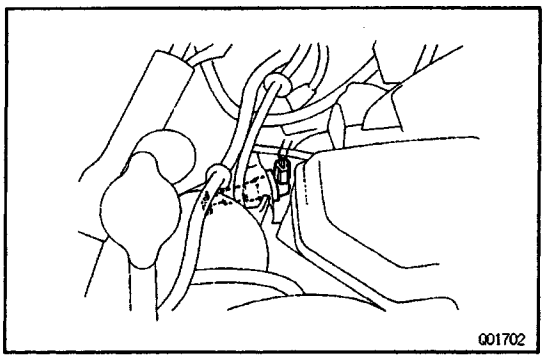

18. CONNECT SPEED SENSOR CONNECTOR

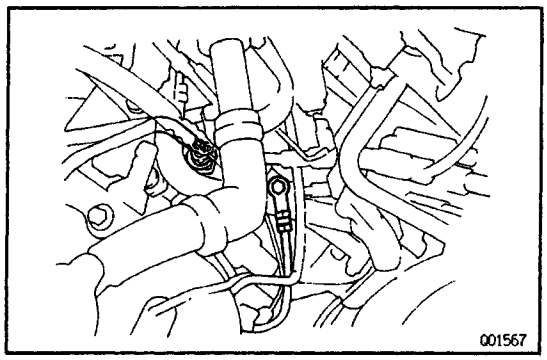

17. CONNECT BACK – UP LIGHT SWITCH CONNECTOR AND EARTH CABLE

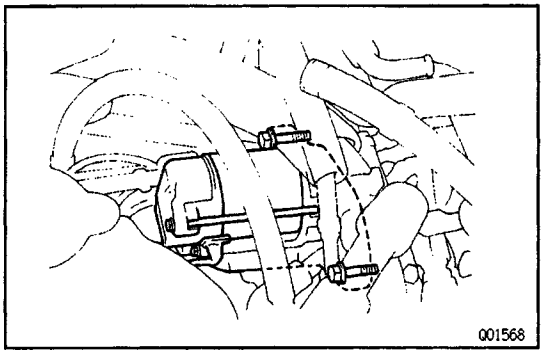

18. INSTALL STARTER

(a) Install the starter.

(b) Install and torque the two bolts.

Torque: 39 N–m (400 kgf–cm, 29 ft–lbf)

(c) Connect the connector and wire to the starter.

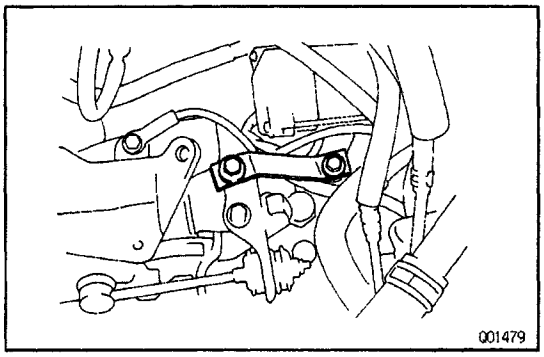

19. INSTALL LH ENGINE MOUNTING STAY

Install the mounting stay with two bolts.

Body side

Torque: 73 N–m (740 kgf–cm, 54 ft–lbf)

Transaxle side

Torque: 25 N–m (250 kgf–cm, 18 ft–lbf)

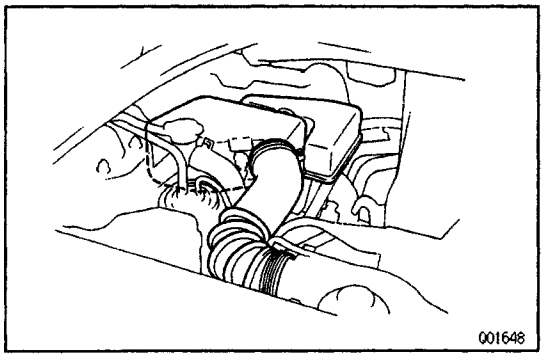

20. INSTALL AIR CLEANER HOUSING ASSEMBLY WITH AIR HOSE

21. INSTALL NEGATIVE BATTERY CABLE

22. INSPECT REAR WHEEL ALIGNMENT

(See page SA–7)

23. PERFORM ROAD TEST

Check for abnormal noise and smooth shifting.

COMPONENT PARTS INSTALLATION

COMPONENT PARTS INSTALLATION (See page MX1–19 and MX1–20)

HINT: Coat all of the sliding and rotating surface with gear oil before assembly.

1. INSPECT DIFFERENTIAL SIDE BEARING PRELOAD (See step 4 on page MX1–54)

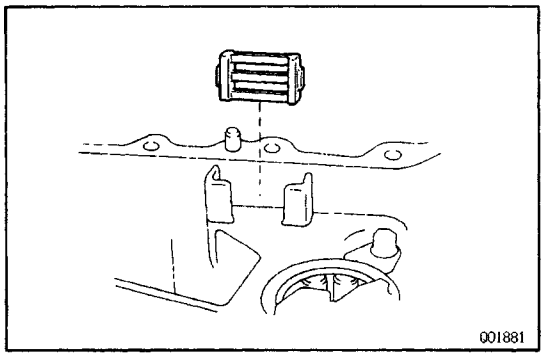

2. INSTALL MAGNET TO TRANSAXLE CASE

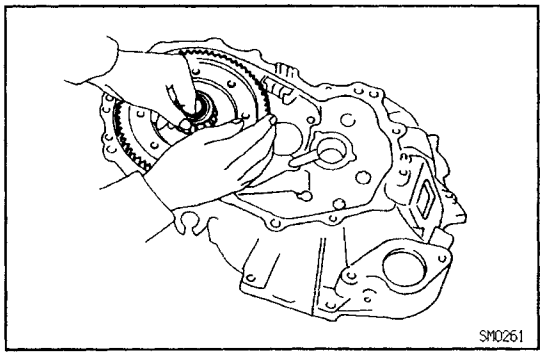

3. INSTALL DIFFERENTIAL CASE ASSEMBLY

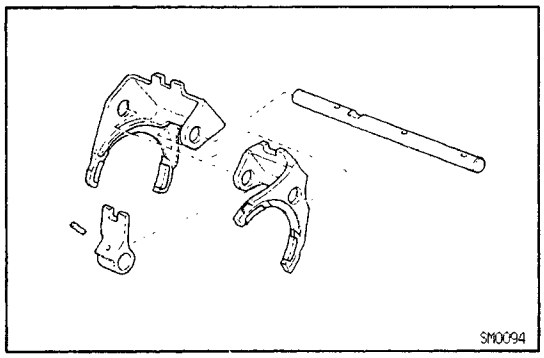

4. ASSEMBLE NO.1 SHIFT FRONT SHAFT, NO.1 SHIFT HEAD, NO.1 AND NO.2 SHIFT FORKS

(a) Assemble the No.1 shift fork shaft, No.1 shift head, No.1 and No.2 shift forks.

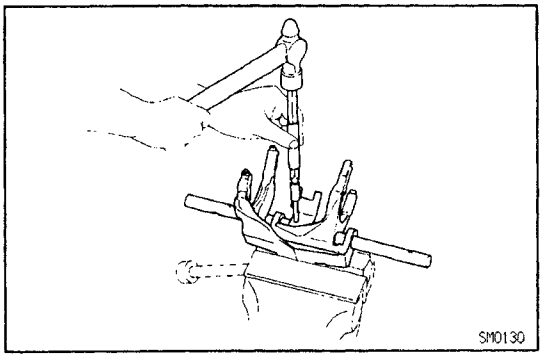

(b) Mount the shift forks to the vise.

(c) Using a pin punch and hammer, drive in the slotted spring pin to the No.1 fork shaft as shown in the figure.

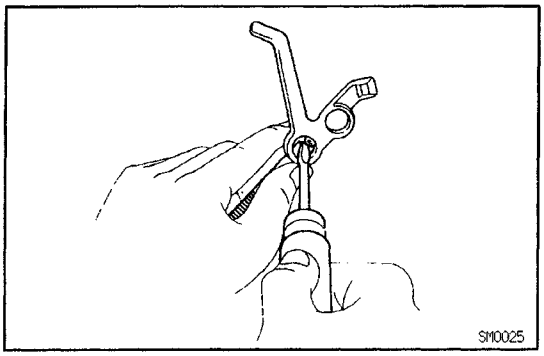

(d) Coat the interlock pin with MP grease.
(e) Using a screwdriver, install the interlock pin into the reverse shift fork hole.
(f) Install the reverse shift fork to the No.1 shift fork shaft.

HINT: When installing the reverse shift fork with interlock pin to the No.1 shift fork shaft, make sure the interlock pin does not drop out.

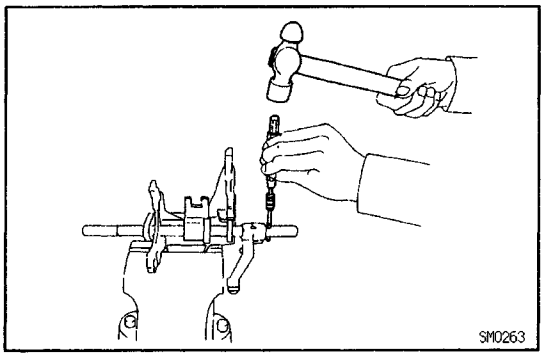

(g) Using a pin punch and hammer, drive in the slotted spring pin to the No.1 fork shaft.

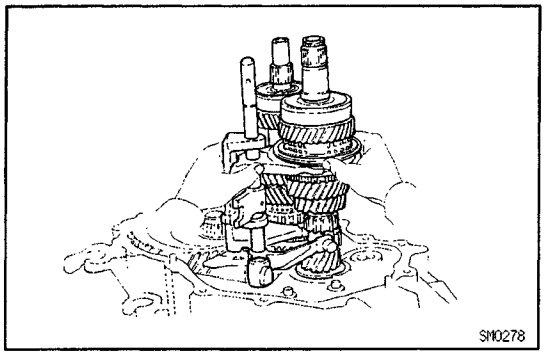

5. INSTALL NO.1 SHIFT FORK SHAFT, NO.1 SHIFT HEAD, NO.1, NO.2 SHIFT FORKS, REVERSE SHIFT FORK WITH INTERLOCK PIN, INPUT AND OUTPUT SHAFT ASSEMBLY

Install the input and output shaft assembly together with the No.1 fork shaft, shift head and shift forks with the interlock pin to the transaxle case.

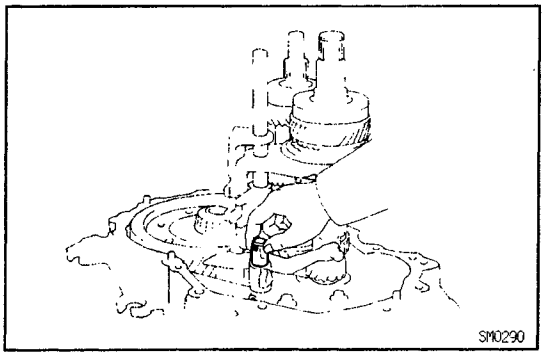

6. INSTALL NO.2 FORK SHAFT

(a) Install the No.2 fork shaft to the transaxle case through the reverse shift fork.

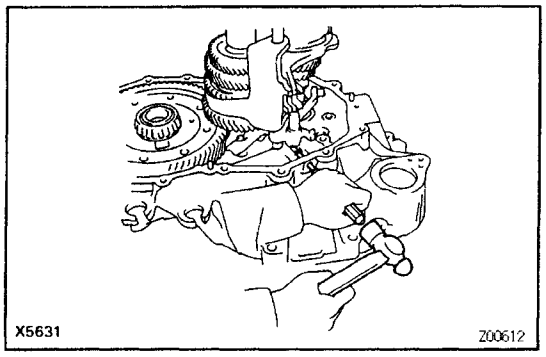

(b) Using a pin punch and hammer, drive in the slotted spring pin.

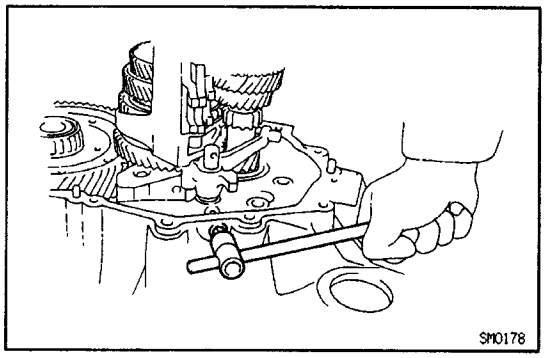

(c) Apply sealant to the plug threads.

Sealant:

Part No.08833–00080, THREE BOND 7344, LOCTITE 242 or equivalent

(d) Using a hexagon wrench (6 mm), install the straight screw plug.

Torque: 13 N–m (130 kgf–cm, 9 ft–lbf)

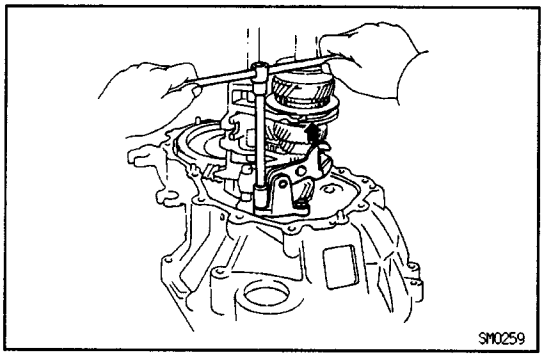

7. INSTALL REVERSE SHIFT ARM

(a) Put the reverse shift fork pivot into the reverse shift arm and install the reverse shift arm to the transaxle case.

(b) Shift the reverse shift arm into the reverse.

(c) Install and torque the two bolts.

Torque: 18 N–m (185 kgf–cm, 13 ft–lbf)

(d) Shift the reverse shift arm to the neutral position.

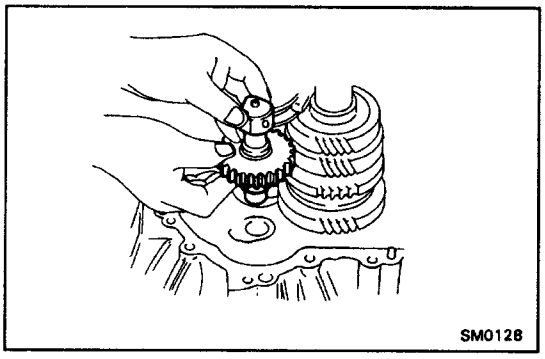

8. INSTALL REVERSE IDLER GEAR AND SHAFT

(a) Install the washer and reverse idler gear to the shaft.

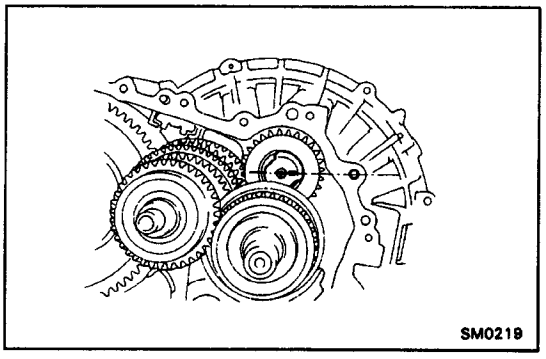

(b) Install the reverse idler gear and shaft as shown.

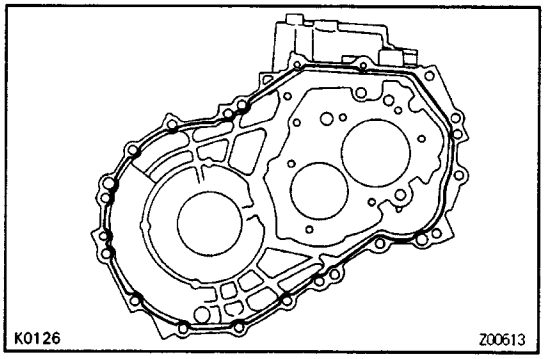

9. INSTALL TRANSMISSION CASE

(a) Remove the any packing material and be careful not to drop oil on the contacting surface of the transaxle case or transmission case.

(b) Apply seal packing to the transmission case as shown.

Seal packing:

Part No. 08833 – 00090, THREE BOND 1281 or equivalent

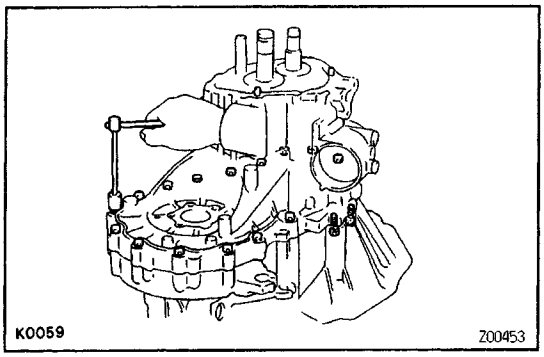

(c) Install and torque the seventeen bolts.

Torque: 29 N–m (300 kgf–cm, 22 ft–lbf)

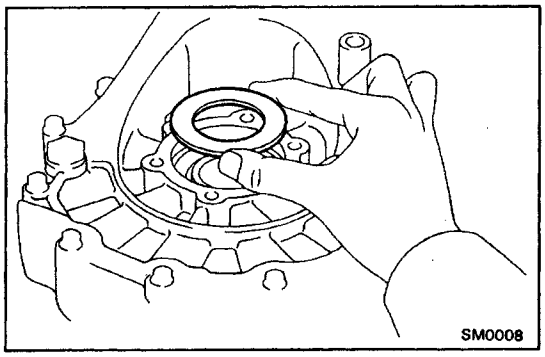

10. INSTALL SHIM AND SIDE SEARING RETAINER WITH O–RING

(a) Install a new O–ring on the retainer.

(b) Install the shim and retainer.

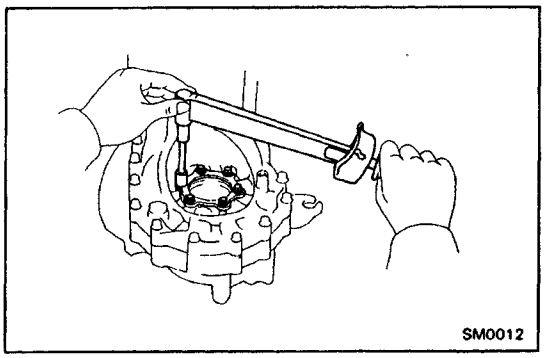

(c) Apply sealant to the bolt threads.

Sealant:

Part No.08833–00080, THREE BOND 1344, LOCTITE 242 or equivalent

(d) Install and torque the six bolts.

Torque: 18 N–m (185 kgf–cm, 13 ft–lbf)

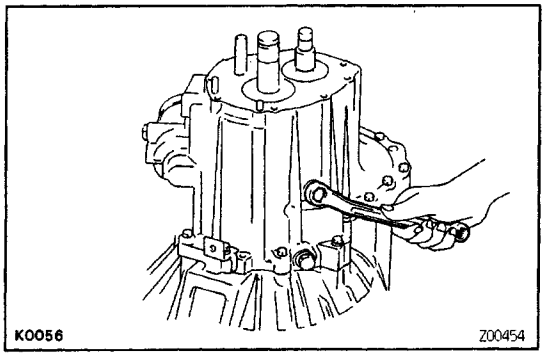

11. INSTALL AND TORQUE REVERSE IDLER GEAR SHAFT LOCK BOLT

Torque: 29 N–m (300 kgf–cm, 22 ft–lbf)

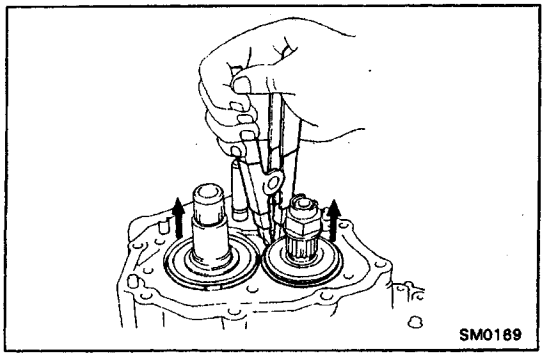

12. INSTALL BEARING SNAP RINGS

Using a snap ring expander, install the two snap rings.

HINT: If it is difficult to install the snap ring, pull up the shafts.

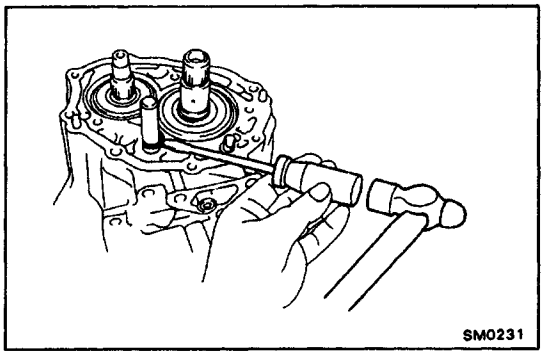

13. INSTALL NO.1 FORK SHAFT SNAP RING

Using a screwdriver and hammer, tap in the snap ring.

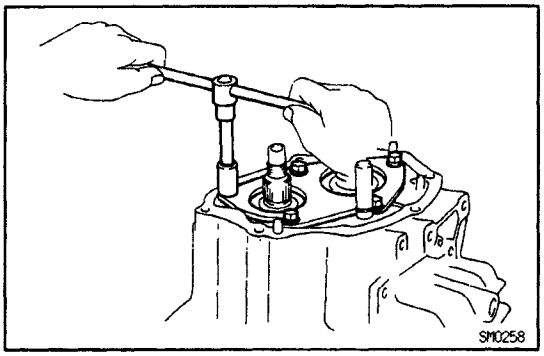

14. INSTALL REAR BEARING RETAINER

(a) Apply sealant to the bolt threads.

Sealant:

Part No. 08833 – 00070, THREE BOND 1324 or equivalent

(b) Install and torque the five bolts.

Torque: 42 N–m (430 kgf–cm, 31 ft–lbf)

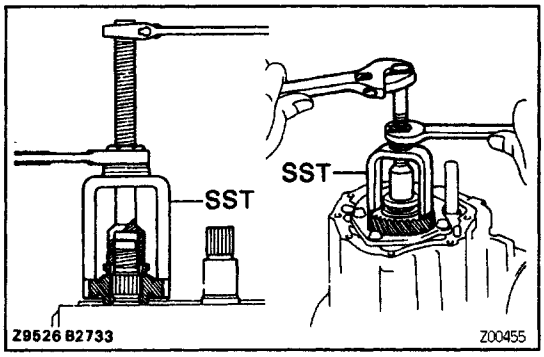

15. INSTALL FIFTH DRIVEN GEAR

Using SST, install the 5th driven gear.
SST 09309–12020

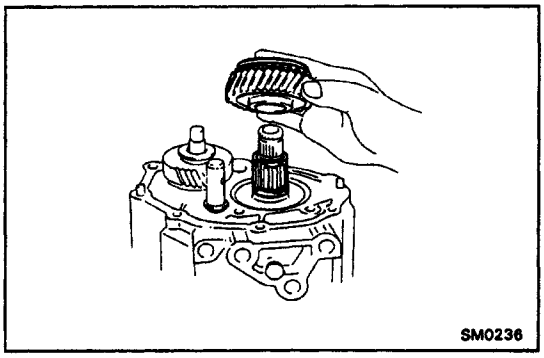

16. INSTALL SPACER, NEEDLE ROLLER BEARINGS, FIFTH GEAR AND SYNCHRONIZER RING

(a) Install the spacer.
(b) Apply gear oil to the needle roller bearings.
(c) Install the 5th gear with the needle roller bearings and synchronizer ring.

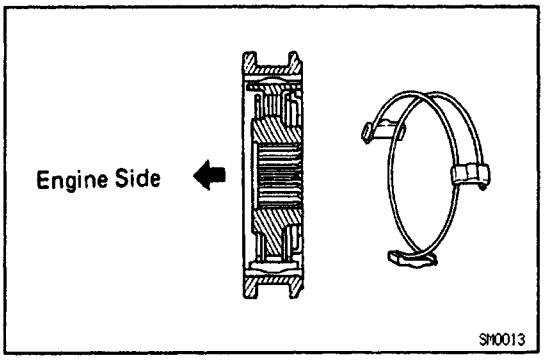

17. INSTALL NO.3 CLUTCH HUB INTO HUB SLEEVE

(a) Install the clutch hub and three shifting keys to the hub sleeve.
(b) Install the two shifting key springs under the shifting keys.

NOTICE: Install the key springs positioned so that their end gaps are not in line.

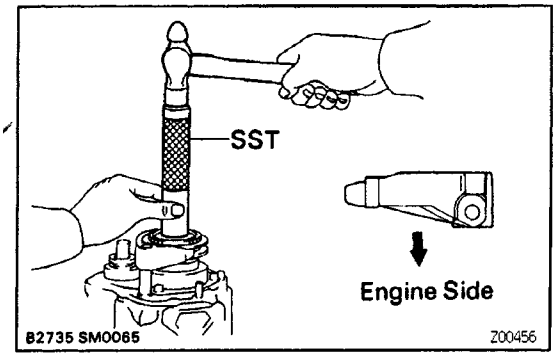

18. INSTALL NO. 3 HUB SLEEVE ASSEMBLY WITH SHIFT FORK

(a) Support the tip of the input shaft with a spacer or such to raise the transaxle assembly.

(b) Using SST and a hammer, drive in the No.3 hub sleeve with shift fork.

SST 09612–22011

NOTICE: Align the synchronizer ring slots with the shifting keys.

(c) Install and torque the bolt to the No.3 shift fork.

Torque: 18 N–m (185 kgf–cm, 13 ft–lbf)

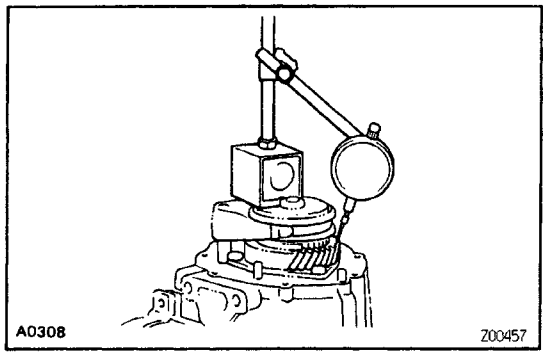

19. INSPECT FIFTH GEAR THRUST CLEARANCE

Using a dial indicator, measure the thrust clearance.

Standard clearance:

0.20–0.40 mm (0.0089–0.0157 in.)

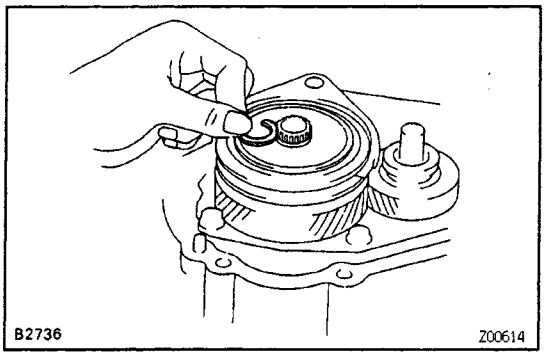

20. INSTALL SHIFTING KEY RETAINER AND SNAP RING

(a) Install the retainer.

(b) Select a snap ring that will allow minimum axial play.

Mark	Thickness mm (in.)	Mark	Thickness mm (in.)
13	2.20–2.25 (0.0866–0.0885)	21	2.60–2.65 (0.1024–0.1043)
14	2.25–2.30 (0.0885–0.0906)	22	2.65–2.70 (0.1043–0.1063)
15	2.30–2.35 (0.0906–0.0925)	23	2.70–2.75 (0.1063–0.1083)
16	2.35–2.40 (0.0925–0.0945)	24	2.75–2.80 (0.1083–0.1102)
17	2.40–2.45 (0.0945–0.0965)	25	2.80–2.85 (0.1102–0.1122)
18	2.45–2.50 (0.0965–0.0984)	26	2.85–2.90 (0.1122–0.1142)
19	2.50–2.55 (0.0984–0.1004)	27	2.90–2.95 (0.1142–0.1161)
20	2.55–2.60 (0.1004–0.1024)		

(c) Using a screwdriver and hammer, tap in the snap ring.

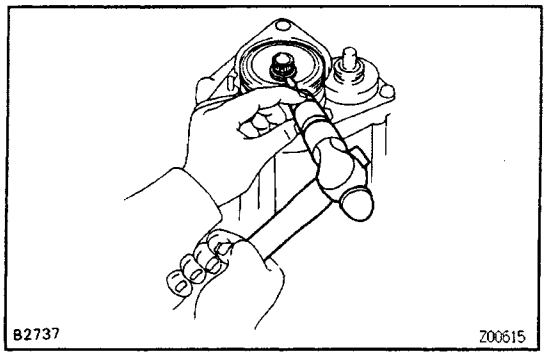

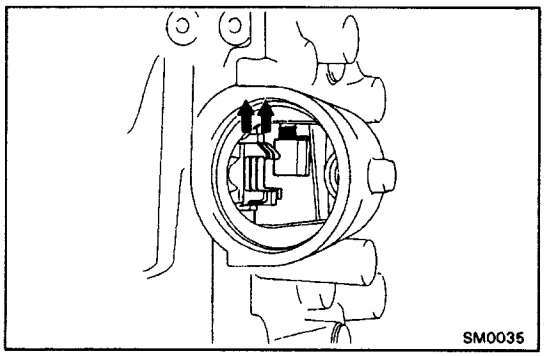

21. INSTALL OUTPUT SHAFT LOCK NUT

(a) Engage the gear double meshing.

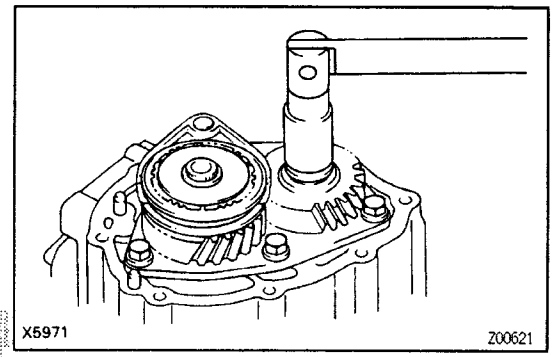

(b) Install and torque the new lock nut.
Torque: 123 N–m (1,250 kgf–cm, 90 ft–lbf)
HINT: The lock nut has LH threads.

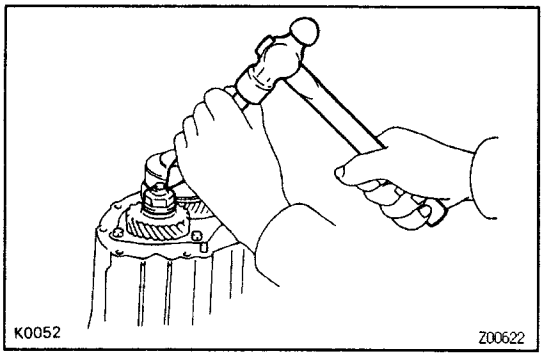

(c) Stake the lock nut.
(d) Disengage the gear double meshing.

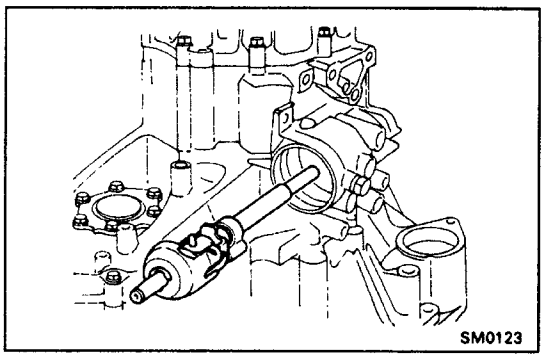

22. INSTALL SHIFT AND SELECT LEVER SHAFT ASSEMBLY

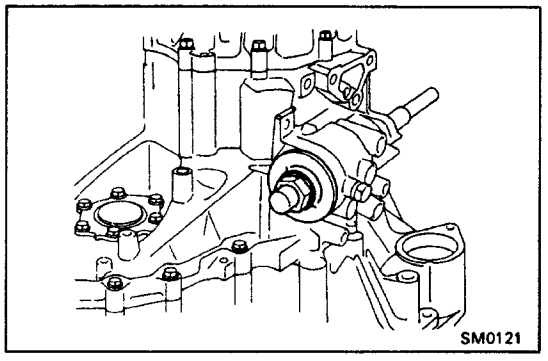

23. INSTALL CONTROL SHAFT COVER

(a) Install a new O–ring and control shaft cover.
(b) Install and torque the control shaft cover.

Torque: 33 N–m (335 kgf–cm, 24 ft–lbf)

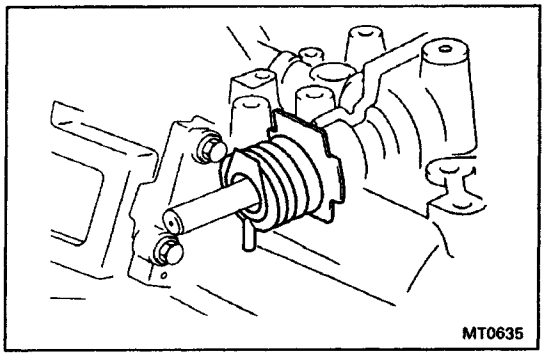

24. INSTALL SHIFT LEVER

(a) Install the boot to the control shaft oil seal.

HINT: Make sure to install the boot in the correct direction. Position the air bleed of the boot downward.

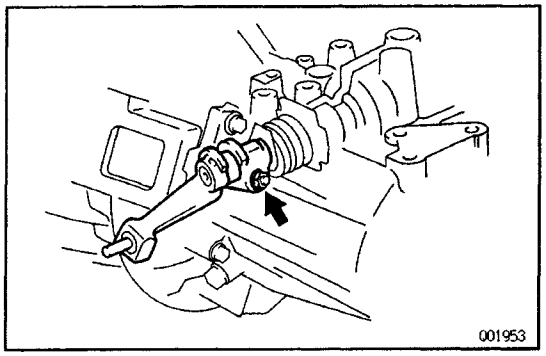

(b) Fit the pin's groove into the shaft's notch and tap on with a hammer.

(c) Install and torque the nut.

Torque: 12 N–m (120 kgf–cm, 9 ft–lbf)

(d) Install the boot to the shift lever.

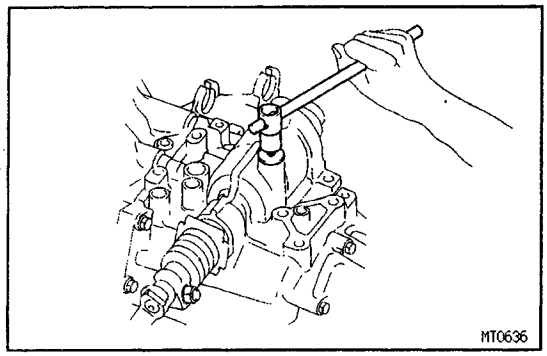

25. INSTALL NO.2 LOCK BALL ASSEMBLY

(a) Apply sealant to the lock ball assembly threads.

Sealant:

Part No.08833–00080, THREE BOND 1344, LOCTITE 242 or equivalent

(b) Using a hexagon wrench (6 mm), install and torque the plug.

Torque: 23 N–m (230 kgf–cm, 17 ft–lbf)

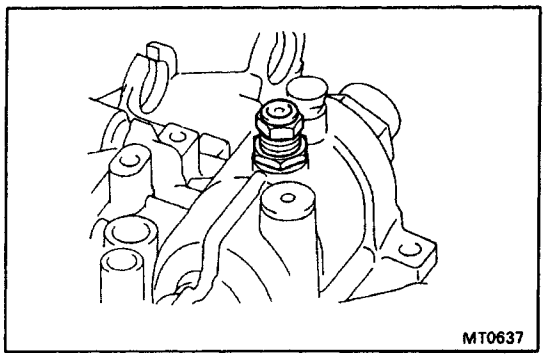

26. INSTALL AND ADJUST NO.1 LOCK BALL ASSEMBLY

(a) Fully loosen the lock nut.

(b) Fully screw in the lock ball.

(c) Loosen the lock ball to where the play at the shift outer lever tip is 0.1 –0.5 mm (0.004–0.020in.).

(d) Hold the lock ball and tighten the lock nut.

Torque: 37 N–m (375 kgf–cm, 27 ft–lbf)

(e) Check the shift outer lever tip play.

Lever tip play:

0.1–0.5 mm (0.004–0.020 in.)

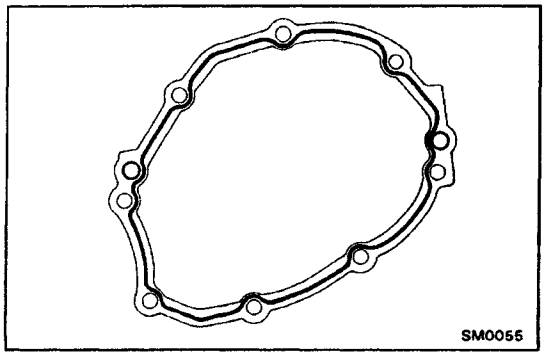

27. INSTALL TRANSMISSION CASE COVER

(a) Remove the any packing material an be careful not to drop oil on the contacting surface of the transmission case or transmission case cover.

(b) Apply seal packing to the transmission case cover as shown.

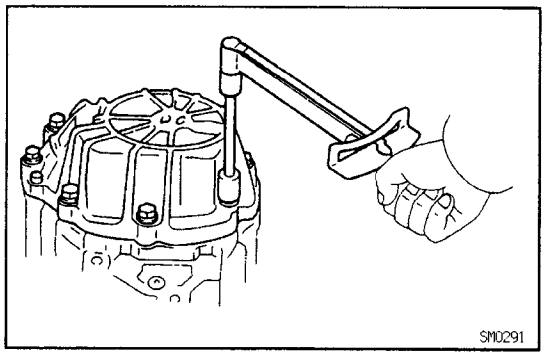

Seal packing:
Part No. 08826 – 00090, THREE BOND 1281 or equivalent

(c) Install the transmission case cover.

(d) Apply sealant to the bolt threads.
Sealant:
Part No.08833–00080, THREE BOND 1344, LOCTITE 242 or equivalent

(e) Install and torque the eight bolts.
Torque: 29 N–m (300 kgf–cm, 22 ft–lbf)

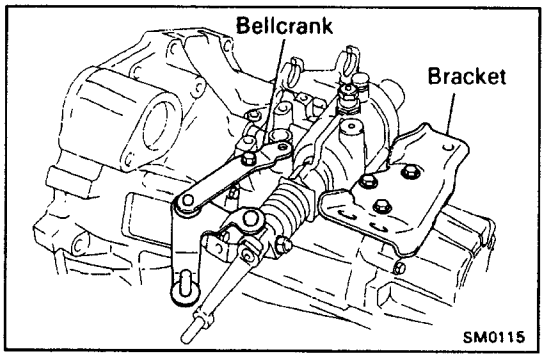

28. INSTALL ENGINE MOUNT BRACKET AND SELECTING BELLCRANK

(a) Install the engine mount bracket and torque the three bolts.
Torque: 52 N–m (530 kgf–cm, 38 ft–lbf)

(b) Install the selecting bellcrank with bolt.
Torque: 20 N–m (200 kgf–cm, 14 ft–lbf)

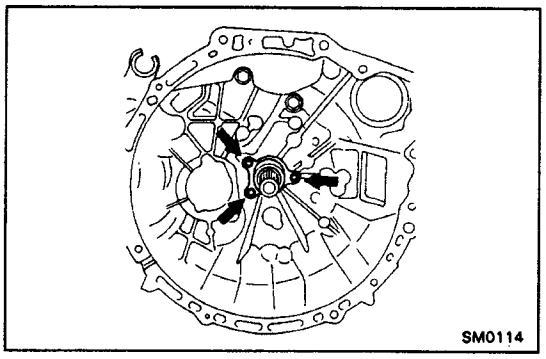

29. INSTALL RELEASE BEARING RETAINER

Install the release bearing retainer and torque the three bolts.
Torque: 7.4 N–m (75 kgf–cm, 65 ft–lbf)

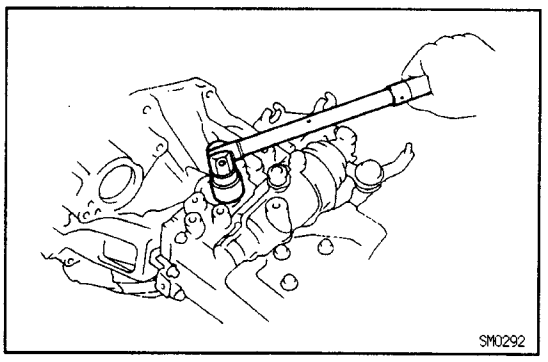

30. INSTALL BACK–UP LIGHT SWITCH
Torque: 44 N–m (450 kgf–cm, 33 ft–lbf)

31. INSTALL VEHICLE SPEED PULSE GENERATOR

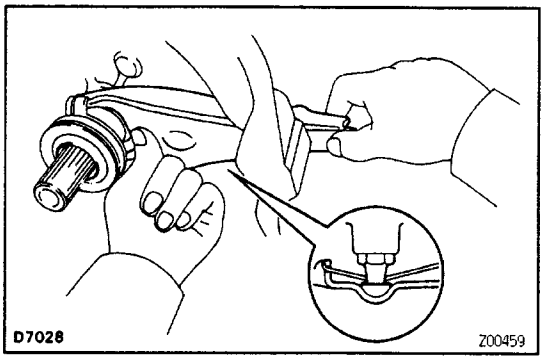

32. INSTALL RELEASE FORK AND BEARING

(a) Apply molybdenum disulphide lithium base grease to the following parts:
- **Release bearing hub inside groove**
- **Input shaft spline**
- **Release fork contact surface**

(b) Apply MP grease to the front surface of the release bearing.

COMPONENT PARTS REMOVAL

COMPONENTS

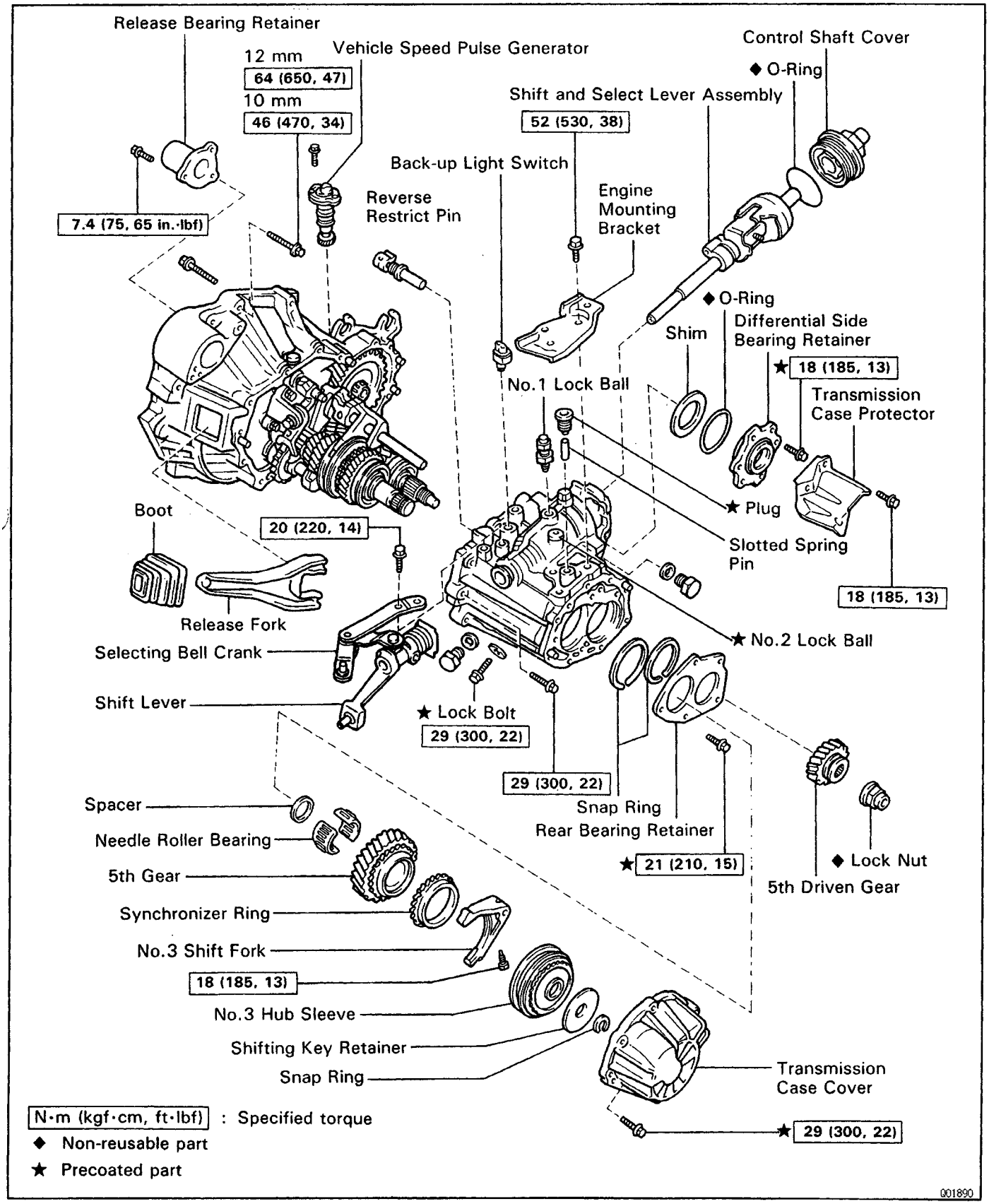

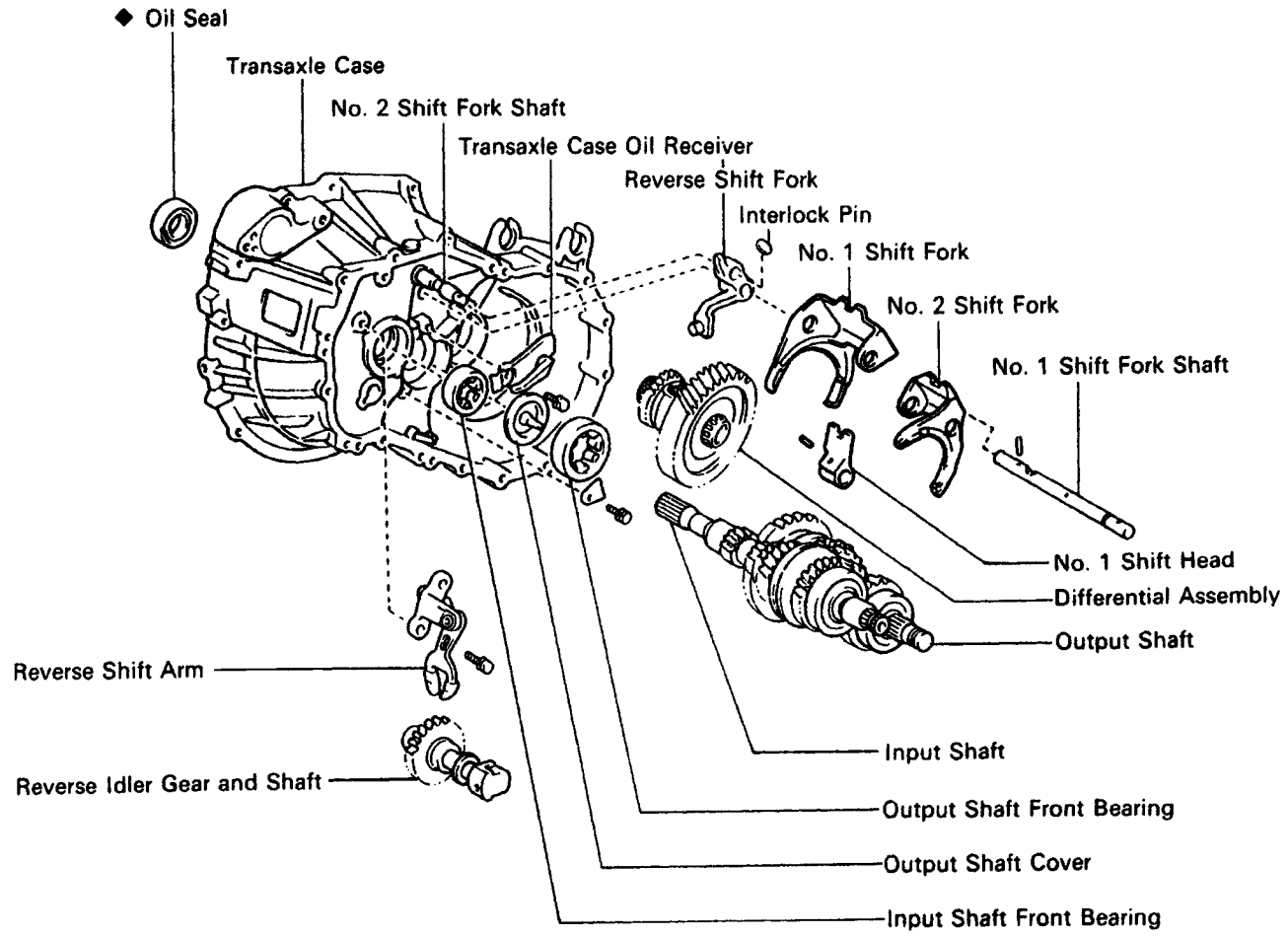

◆ Non-reusable part

SM0242

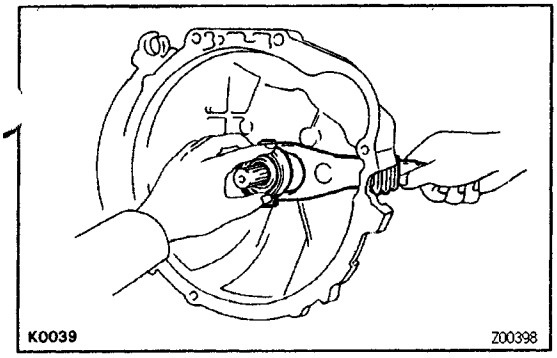

BASIC SUBASSEMBLY SEPARATION MX04N–01

(See page MX1–19 and MX1–20)

1. REMOVE RELEASE FORK, BEARING BACK – UP LIGHT SWITCH AND VEHICLE SPEED PULSE GENERATOR

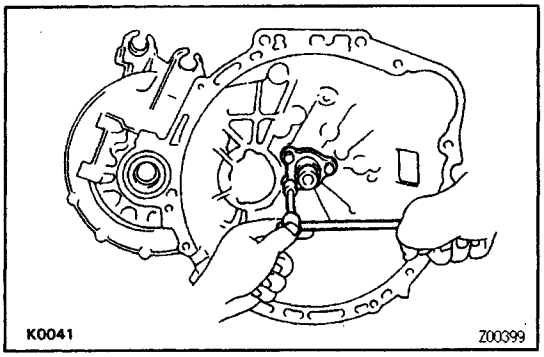

2. REMOVE RELEASE BEARING RETAINER

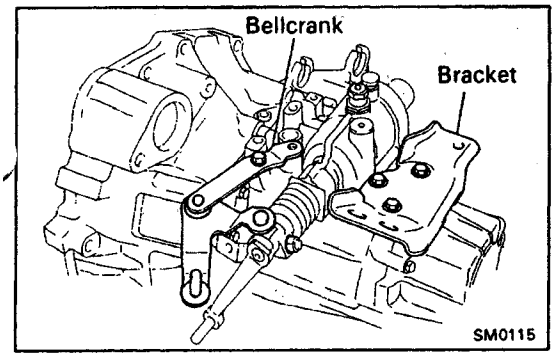

3. REMOVE SELECTING BELLCRANK AND ENGINE MOUNT BRACKET

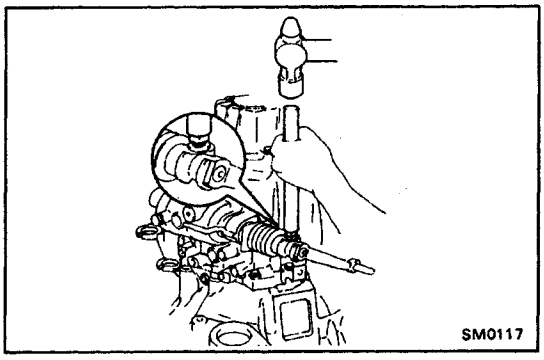

4. REMOVE SHIFT LEVER

(a) Loosen the lock nut as far as the tip of the lock pin.
(b) Using a brass bar and hammer, tap out the lock pin.
(c) Pull out the shift lever with dust boot from shift and select lever shaft.

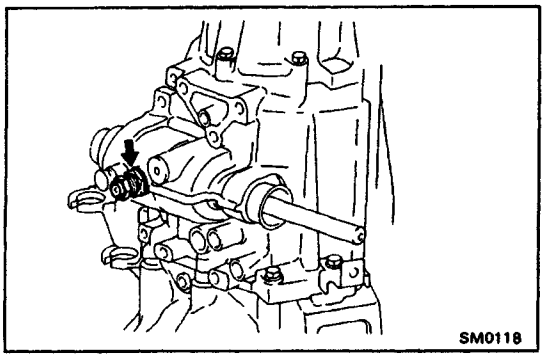

5. REMOVE NO.1 AND NO.2 LOCK BALL ASSEMBLIES

(a) Loosen the lock nut and remove the No. 1 lock ball.

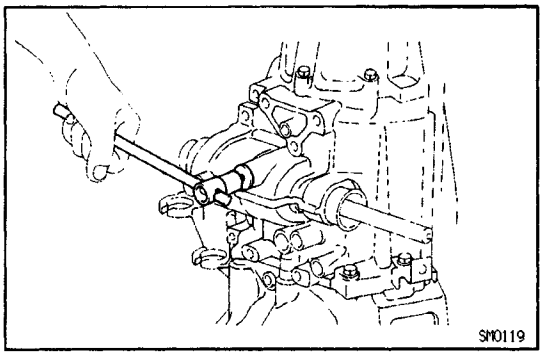

(b) Using a hexagon wrench (6 mm), remove the No.2 lock ball.

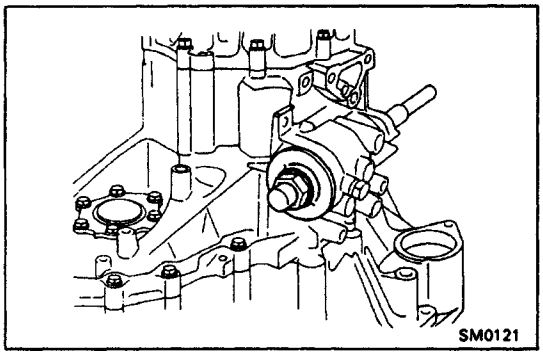

6. REMOVE SHIFT AND SELECT LEVER SHAFT AS–SEMBLY

(a) Remove the control shaft cover.

(b) Remove the O–ring from control shaft cover.

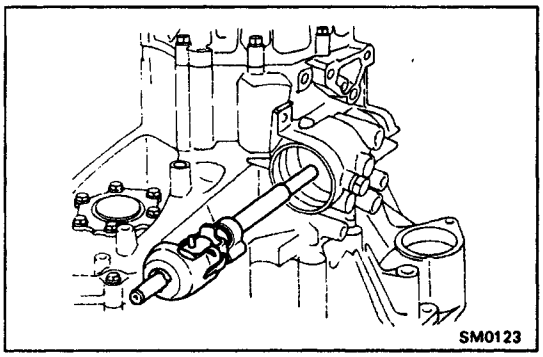

(c) Pull out the shift and select lever shaft assembly.

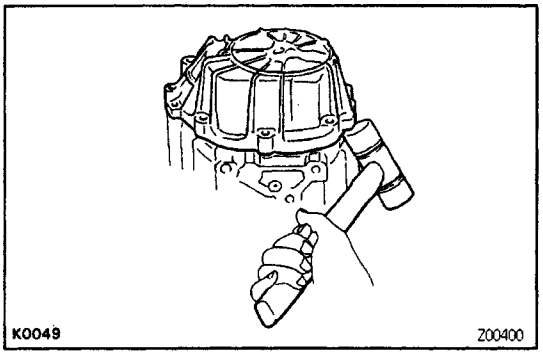

7. REMOVE TRANSMISSION CASE COVER

(a) Remove the eight bolts.

(b) Using a plastic hammer, tap off the transmission case cover.

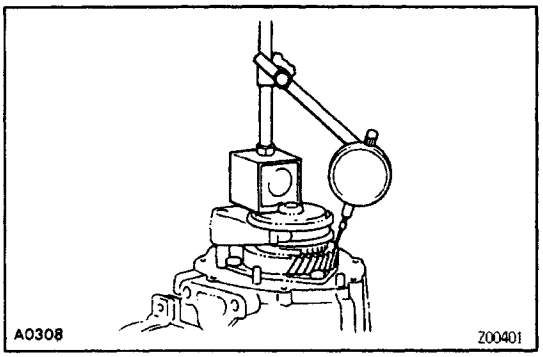

8. INSPECT FIFTH GEAR THRUST CLEARANCE

Using a dial indicator, measure the thrust clearance.

Standard clearance:

0.20–0.40 mm (0.0079–0.0157 in.)

Maximum clearance:

0.45 mm (0.0177 in.)

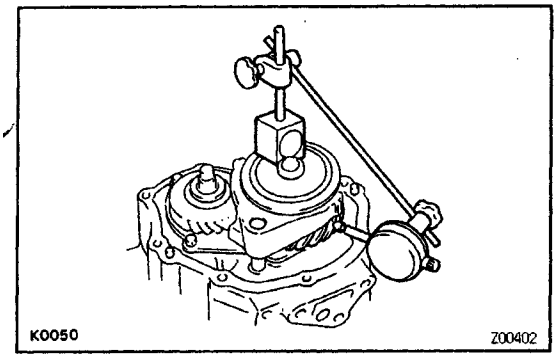

9. INSPECT FIFTH GEAR OIL CLEARANCE

Using a dial indicator, measure the oil clearance.

Standard clearance:

0.009–0–050 mm (0.0004–0.0020 in.)

Maximum clearance:

0.07 mm (0.0028 in.)

If the clearance exceeds the maximum, replace the gear, needle roller bearing or input shaft.

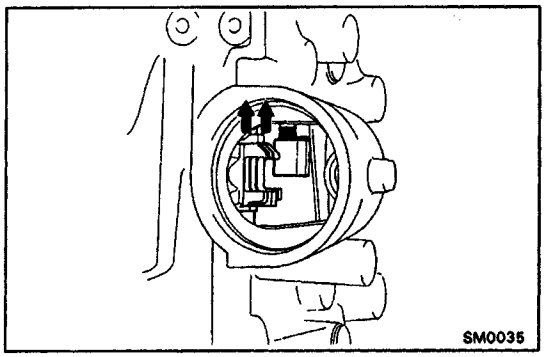

10. REMOVE OUTPUT SHAFT LOCK NUT

(a) Unstake the nut.

(b) Engage the gear double meshing.

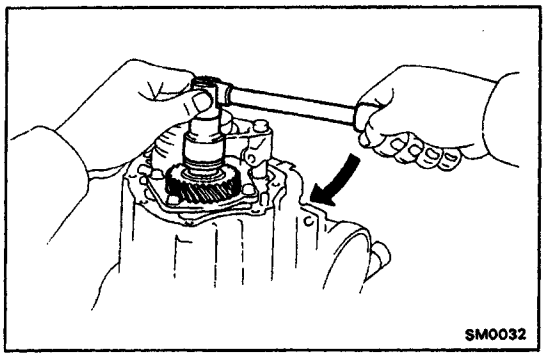

(e) Remove the lock nut clockwise and remove it.

HINT: The lock nut has LH threads.

(d) Disengage the gear double meshing.

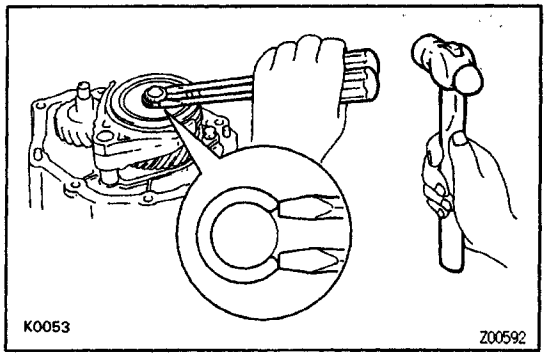

11. REMOVE NO.3 HUB SLEEVE ASSEMBLY AND NO.3 SHIFT FORK

(a) Using two screwdrivers and a hammer, tap out the snap ring.

(b) Remove the shifting key retainer.

(c) Remove the bolt from the No.3 shift fork.

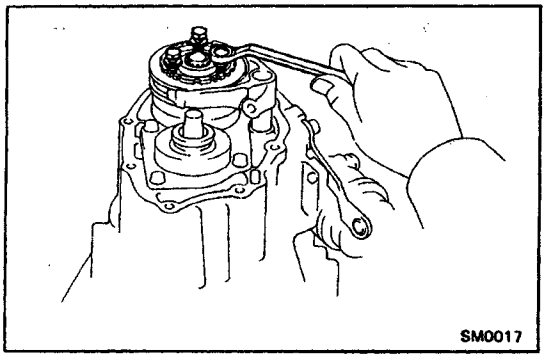

(d) Using– the three case cover set bolts, tighten the three bolts a little at a time and remove the No.3 hub sleeve assembly and shift fork.

12. REMOVE FIFTH GEAR, SYNCHRONIZER RING, NEEDLE ROLLER BEARINGS AND SPACER

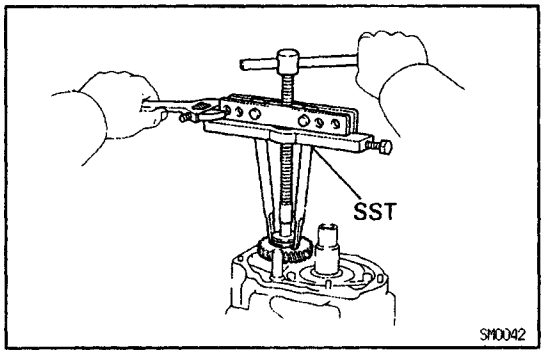

13. REMOVE FIFTH DRIVEN GEAR

Using SST, remove the 5th driven gear.
SST 09950–20017

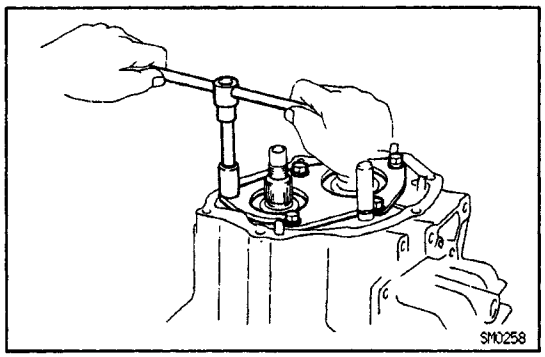

14. REMOVE REAR BEARING RETAINER

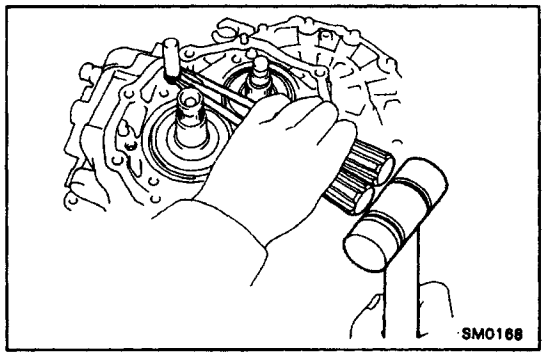

15. REMOVE SNAP RING FROM NO. 1 SHIFT FORK SHAFT

Using two screwdrivers and a hammer, tap out the snap ring.

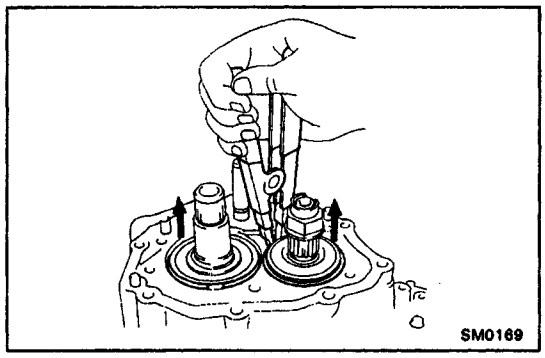

16. REMOVE BEARING SNAP RINGS

Using a snap ring expander, remove the two snap rings.
HINT: If it is difficult to remove the snap rings, pull up the shafts.

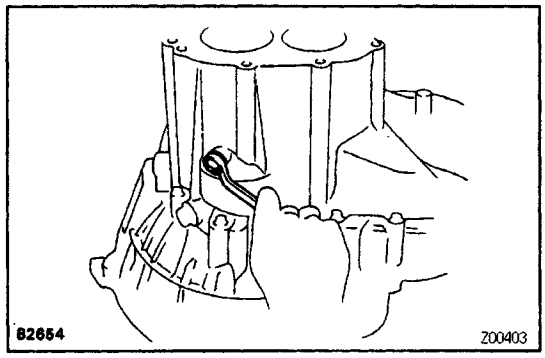

17. REMOVE REVERSE IDLER GEAR SHAFT LOCK BOLT

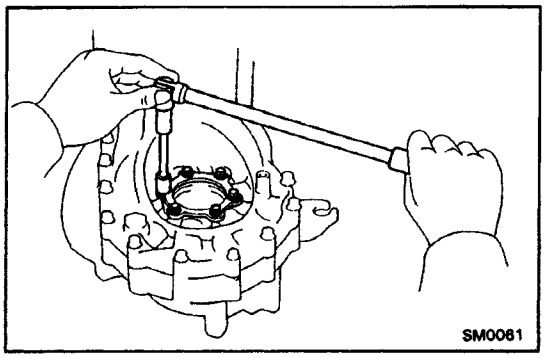

18. REMOVE DIFFERENTIAL SIDE BEARING RETAINER AND SHIM

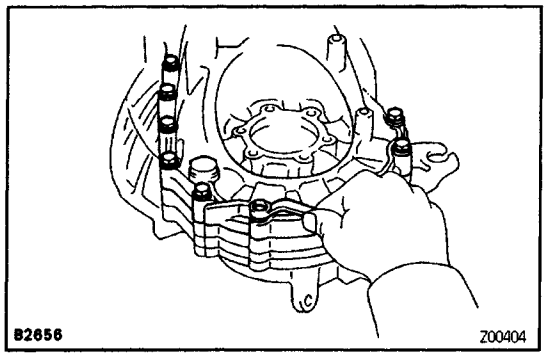

19. REMOVE TRANSMISSION CASE

(a) Remove the seventeen bolts.
(b) Using a plastic hammer, tap off the transmission case.

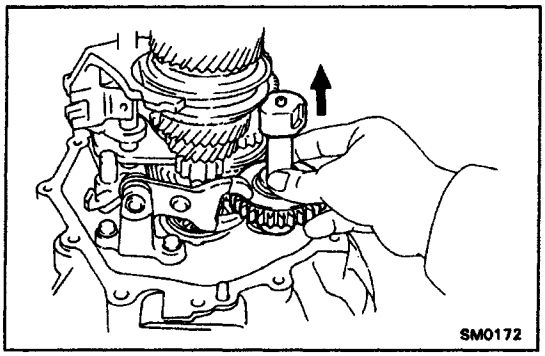

20. REMOVE REVERSE IDLER GEAR AND SHAFT

(a) Pull out the shaft.
(b) Remove the idler gear and thrust washer.

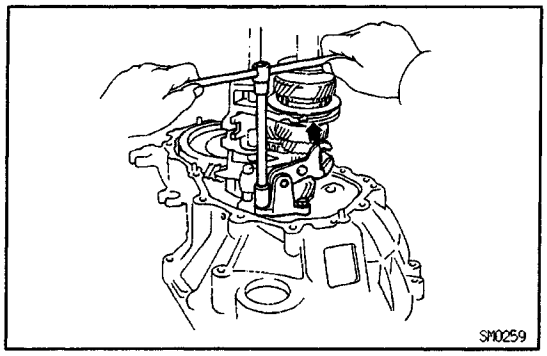

21. REMOVE REVERSE SHIFT ARM

(a) Shift the fork shaft into reverse.
(b) Remove the two bolts and pull off the reverse shift arm.

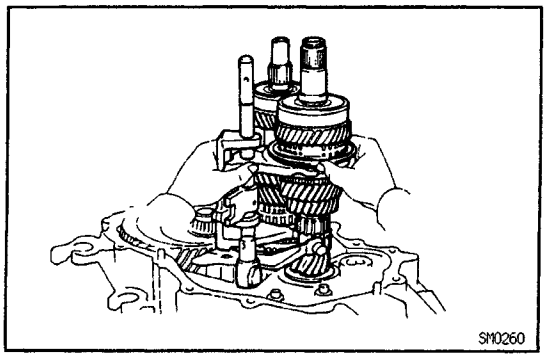

22. REMOVE NO.1 SHIFT FORK SHAFT, NO.1 SHIFT HEAD, NO.1 AND NO.2 SHIFT FORKS, REVERSE SHIFT FORK WITH INTERLOCK PIN, INPUT AND OUTPUT SHAFTS ASSEMBLY

Remove the input shaft assembly and output shaft assembly together with the No. 1 fork shaft, shift head and shift forks with the interlock pin from the trans–axle case.

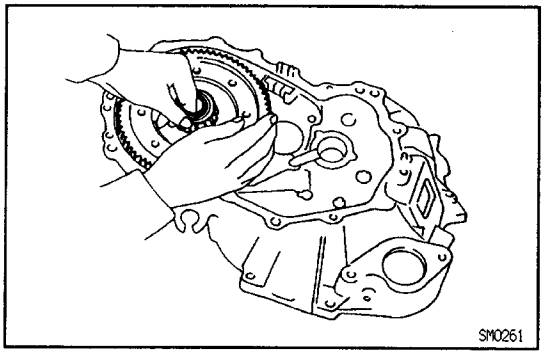

23. REMOVE DIFFERENTIAL CASE ASSEMBLY

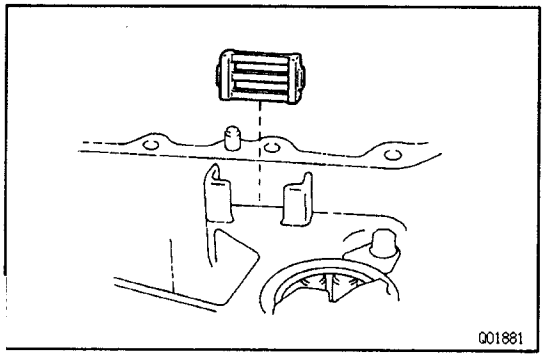

24. REMOVE MAGNET FROM TRANSAXLE CASE

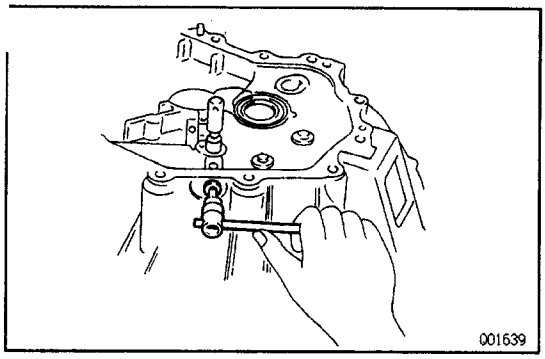

25. REMOVE NO.2 FORK SHAFT

(a) Using a hexagon wrench (6 mm), remove the straight screw plug.

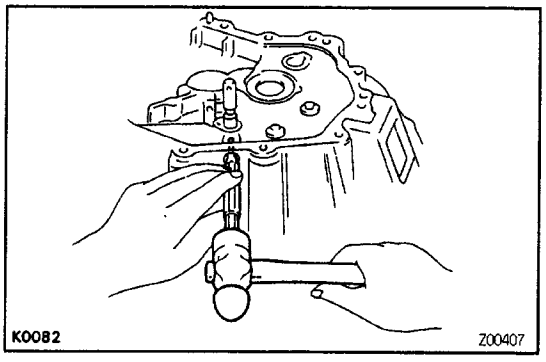

(b) Using a pin punch and hammer, drive out the slotted spring pin.
(c) Pull out the shaft.

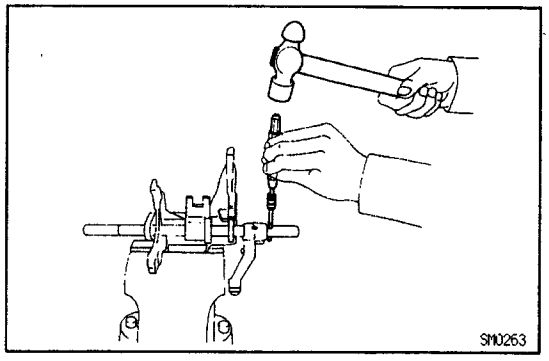

26. SEPARATE NO.1 FORK SHAFT, NO.1 SHIFT HEAD, NO.1, NO.2 SHIFT FORKS AND REVERSE SHIFT FORK

(a) Mount the shift forks to the vise.
(b) Using a pin punch and hammer, drive out the slotted spring pin from the No.1 fork shaft.

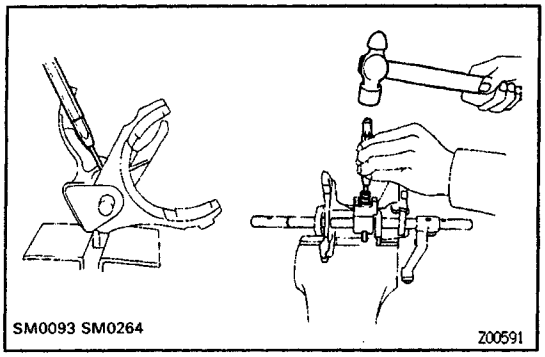

(c) Using a pin punch and hammer, drive out the slotted spring pin from the No.1 fork shaft as shown in the figure.

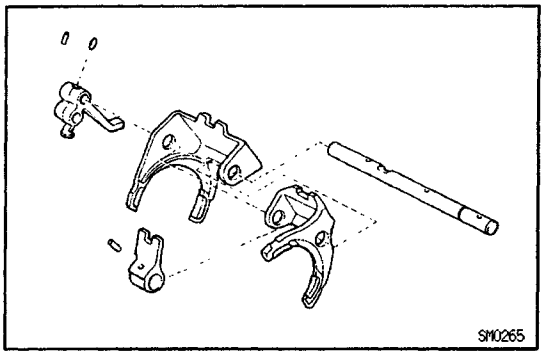

(d) Separate the No.1 shift fork shaft, No.1 shift head, No.1, No.2 shift forks and reverse shift fork.

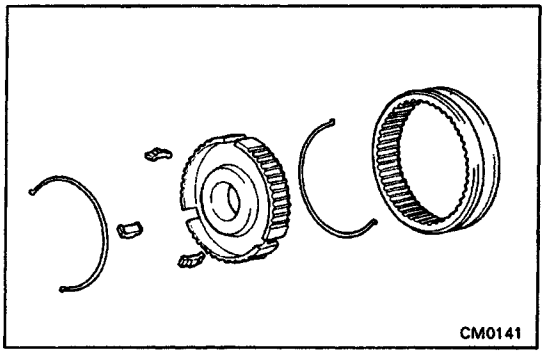

27. REMOVE NO.3 HUB SLEEVE, SHIFTING KEYS AND SPRINGS FROM NO–3 CLUTCH HUB

Using a screwdriver, remove the three shifting keys and two springs from the No.3 clutch hub.

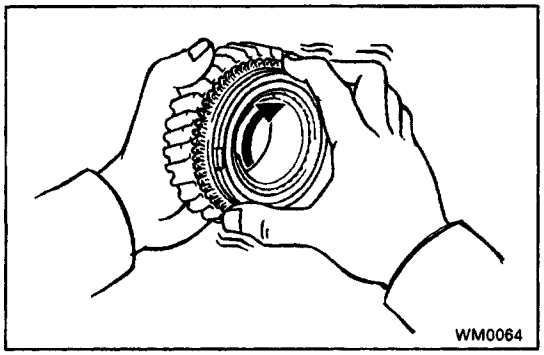

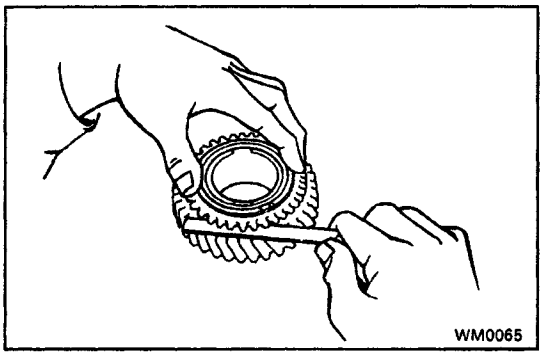

COMPONENT PARTS INSPECTION

MX04P–01

1. INSPECT SYNCHRONIZER RING OF FIFTH GEAR

(a) Check for wear or damage.

(b) Check the braking effect of the synchronizer ring.

Turn the synchronizer ring in one direction while pushing it to the gear cone and check that the ring is locked.

If the braking effect is insufficient, lightly rub the synchronizer ring and gear cone by applying a small amount of fine lapping compound.

NOTICE:

- **Wash off completely the fine lapping compound after rubbing.**
- **Check again the braking effect of the synchronizer ring.**

(c) Using a feeler gauge, measure the clearance between the synchronizer ring back and the gear spline end.

Minimum clearance:

0.6 mm (0.024 in.)

If the clearance is less than the minimum, replace the synchronizer ring and gear cone by applying a small amount of fine lapping compound.

NOTICE: Wash off completely the fine lapping compound after rubbing.

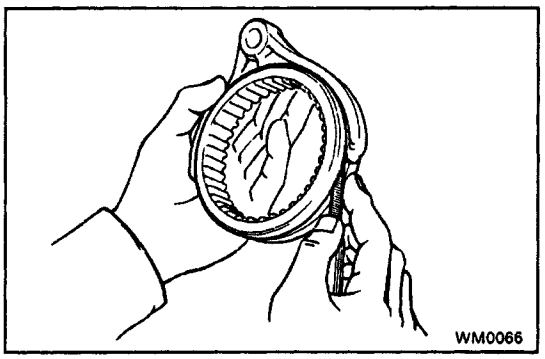

2. INSPECT CLEARANCE OF N4.3 SHIFT FORK AND NO.3 HUB SLEEVE

Using a feeler gauge, measure the clearance between the hub sleeve and shift fork.

Maximum clearance:

1.0 mm (0.039 in.)

If the clearance exceeds the maximum, replace the shift fork or hub sleeve.

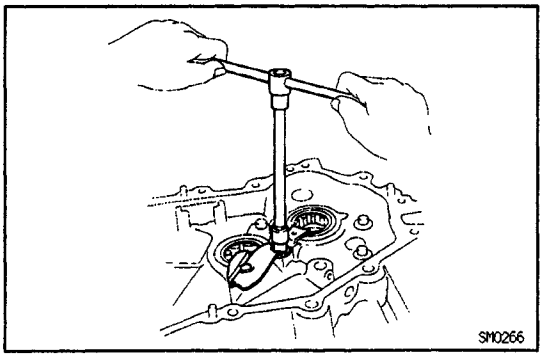

3. IF NECESSARY, REPLACE INPUT SHAFT FRONT BEARING

(a) Remove the bolt and transaxle case receiver.

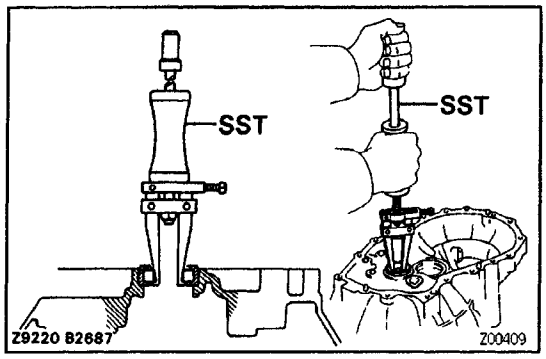

(b) Using SST; pull out the bearing.
SST 09308–00010

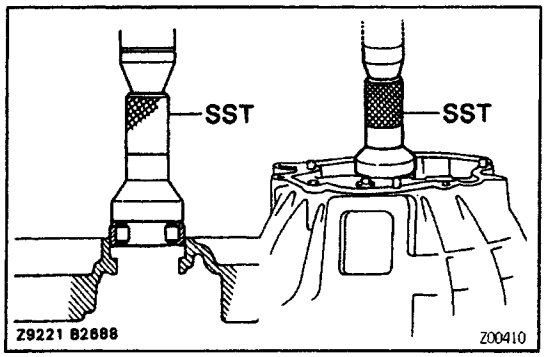

(c) Using SST, press in a new bearing.
SST 09310–35010

(d) Install the transaxle case receiver and torque the bolt.

Torque: 7.4 N–m (75 kgf–cm, 65 in.lbf)

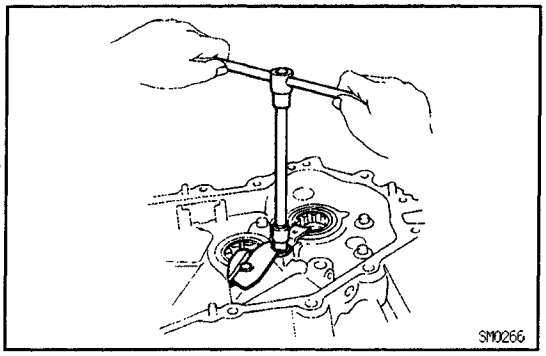

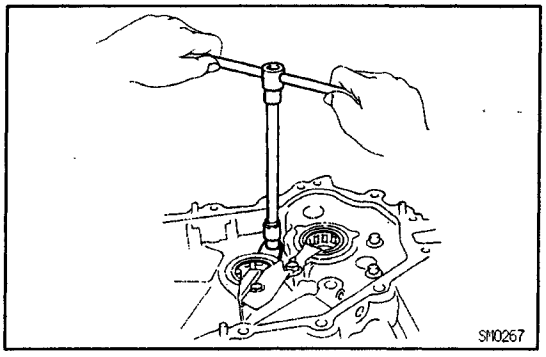

4. IF NECESSARY. REPLACE OUTPUT SHAFT FRONT BEARING

(a) Remove the bolt and bearing lock plate.

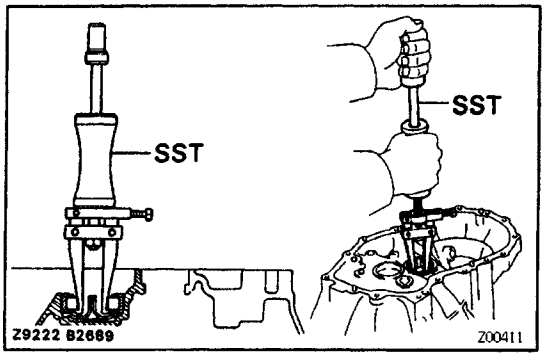

(b) Using SST, pull out the bearing.
SST 09308–00010

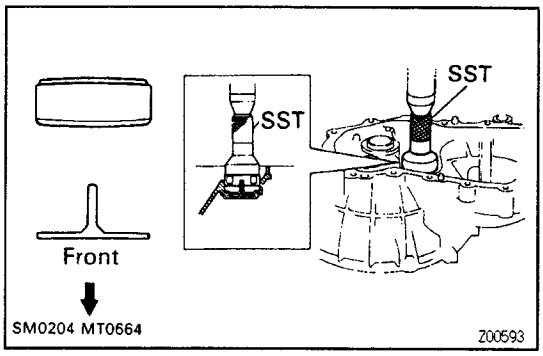

(c) Using SST, press in a new bearing.
SST 09310–35010

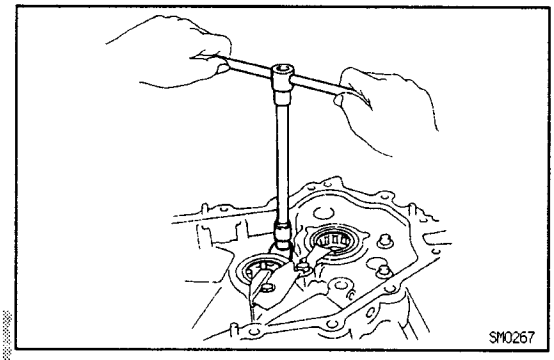

(d) Install the bearing lock plate and torque the bolt.
Torque: 18 N–m (185 kgf–cm, 13 ft–lbf)

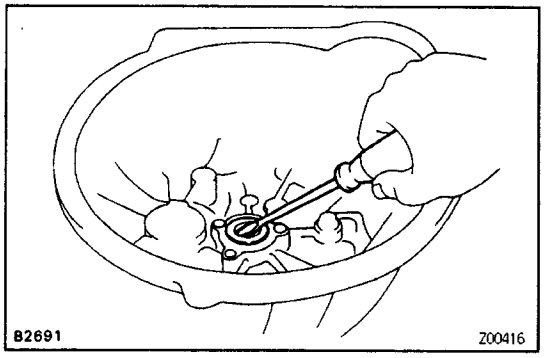

5. IF NECESSARY, REPLACE INPUT SHAFT FRONT OIL SEAL

(a) Using a screwdriver, pry out the oil seal.

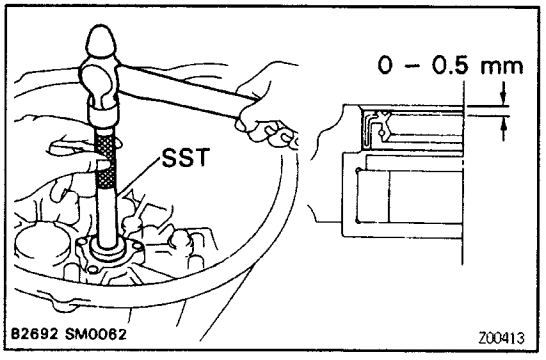

(b) Using SST, drive in a new oil seal.
SST 09608–20012 (09608–00080, 09608–03020)
Drive in depth:
0–0.5 mm (0–0.012 in.)

(c) Coat the lip of the oil seal with MP grease.

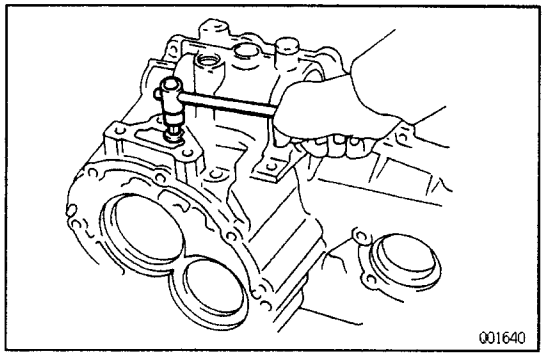

6. IF NECESSARY, REPLACE REVERSE RESTRICT PIN

(a) Using a hexagon wrench (6 mm), remove the straight screw plug.

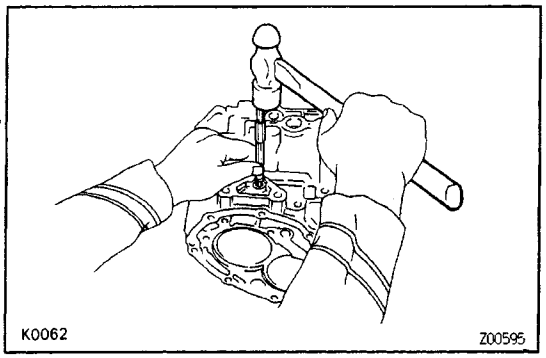

(b) Using a pin punch and hammer, drive out the slotted spring pin.

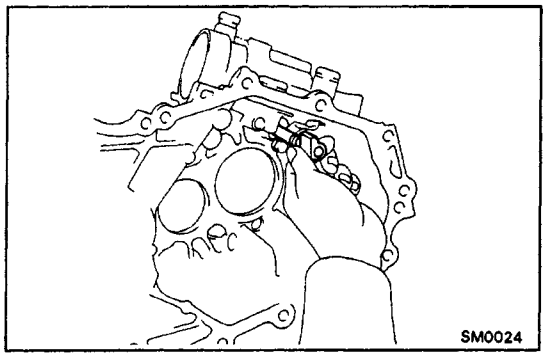

(c) Replace the reverse restrict pin.

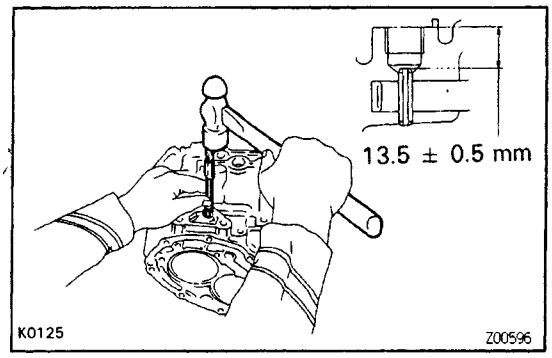

(d) Using a pin punch and hammer, drive in the slotted spring pin.

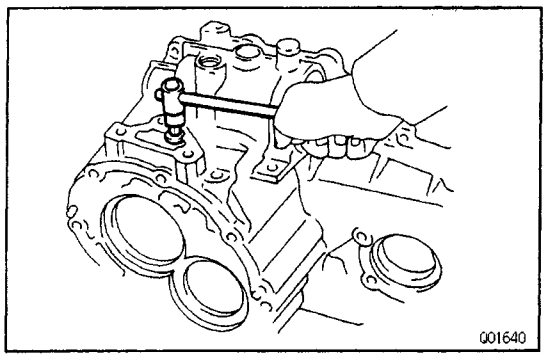

(e) Apply sealant to the plug threads.

Sealant:

Part No.08833–00080, THREE BOND 1344, LOCTITE 242 or equivalent

(f) Using a hexagon wrench (6 mm), install and torque the straight screw plug.

Torque: 13 N–m (130 kgf–cm, 9 ft–lbf)

MANUAL TRANSAXLE

DESCRIPTION

PRECAUTIONS

When working with FIPG material, you must be observe the following.

- **Using a razor blade and gasket scraper, remove all the old sealant (FIPG) material from the gasket surfaces.**
- **Thoroughly clean all components to remove all the loose material.**
- **Clean both sealing surfaces with a non–residue solvent.**
- **Apply the sealant in approx. 1 mm (0.04 in.) bead along the sealing surface.**
- **Parts must be assembled within 10 minutes of application. Otherwise, the sealant (FIPG) material must be removed and reapplied.**

DESCRIPTION

- Transaxle type S54 is constant mesh synchronizers for forward gears, and a sliding mesh reverse gear.
- The input shaft is composed of the 1st and 2nd speed gears and the reverse drive gear, and the output shaft is composed of the drive gear (for use with the ring gear).

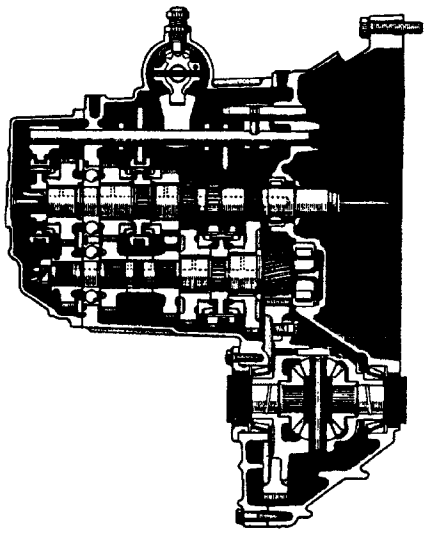

CD0007

Type of Transaxle		S54
Type of Engine		5S–FE
Gear Ratio	1st 2nd 3rd 4th 5th Reverse	3.285 1.960 1.322 1.028 0.820 3.153
Differential Gear Ratio		4.176
Oil Capacity		2.6 liters (2.7 US qts, 2.3 Imp. qts)
Oil Viscosity		SAE 75W–90
Oil Grade		API GL–3, GL–4 or GL–5

Z02643

DIFFERENTIAL CASE

MX02U–01

COMPONENTS

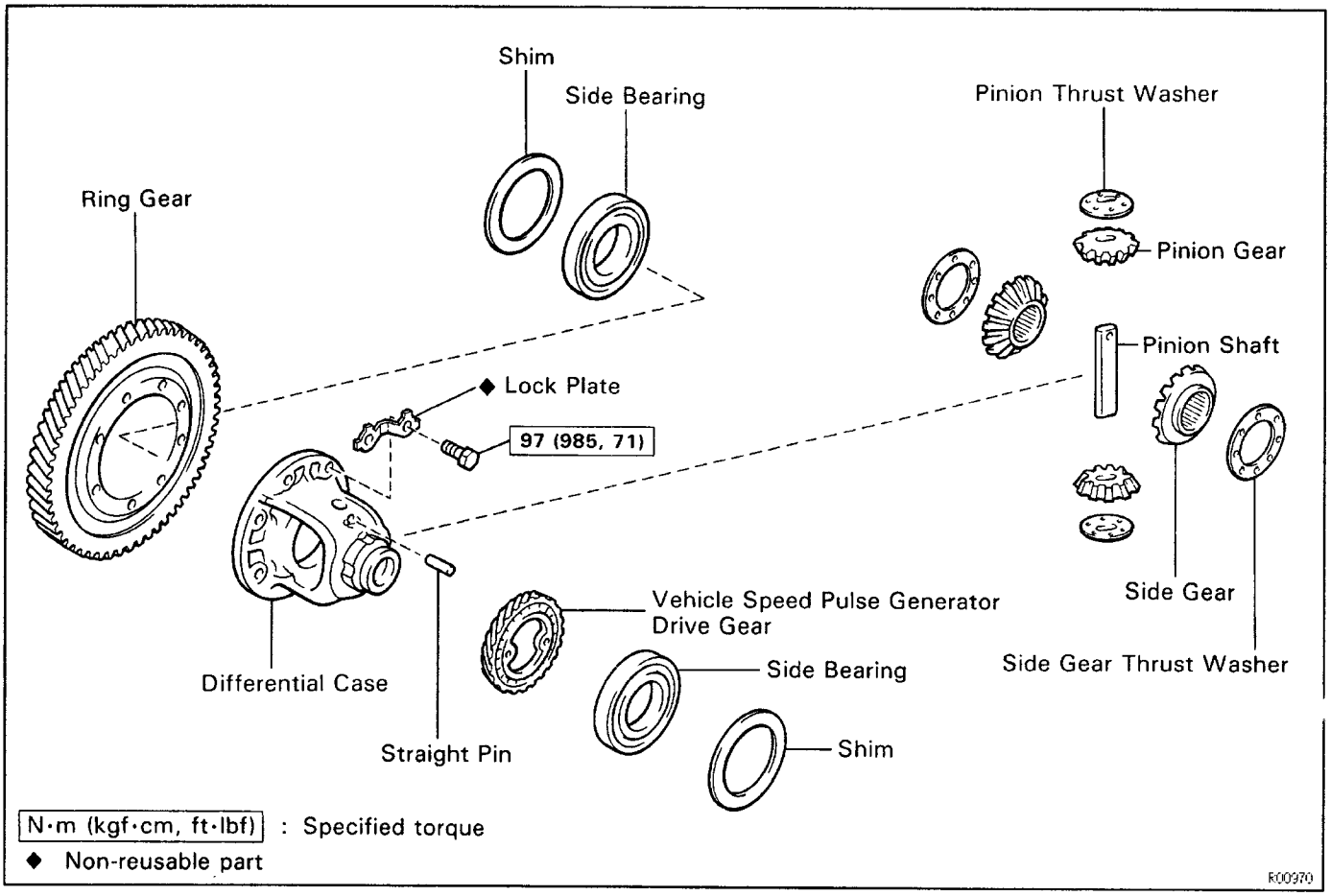

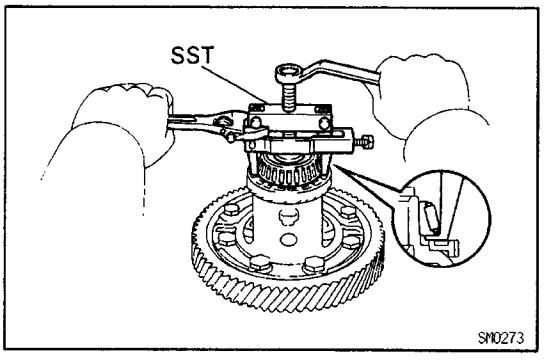

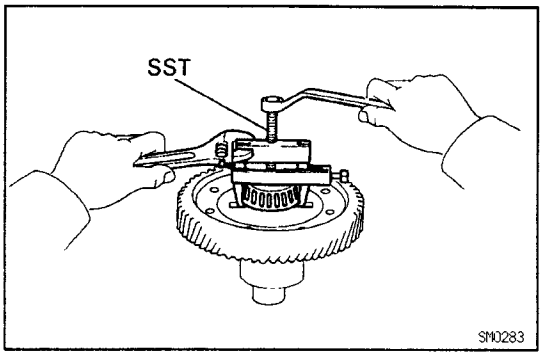

DIFFERENTIAL CASE DISASSEMBLY

MX03A–02

1. REMOVE SIDE BEARING FROM DIFFERENTIAL CASE

(a) Using SST, remove the bearing from drive gear side of the case.
SST 09502 –10012

(b) Remove the vehicle speed pulse generator drive gear.

(c) Using SST, remove the bearing from ring gear side of the case.
SST 09502–10012

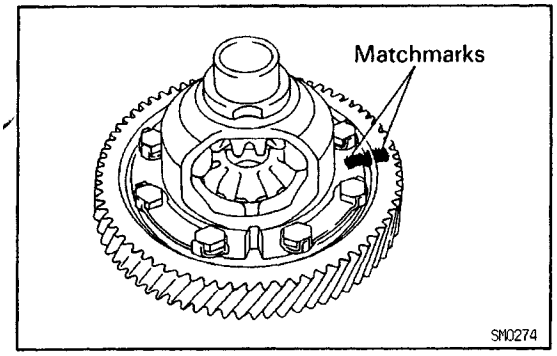

2. REMOVE RING GEAR

(a) Place matchmarks on the ring gear and the case.

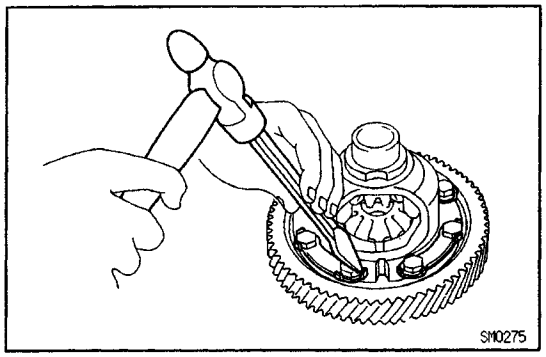

(b) Using a chisel and hammer, unstake the lock plates.
(c) Remove the eight bolts and four lock plates.

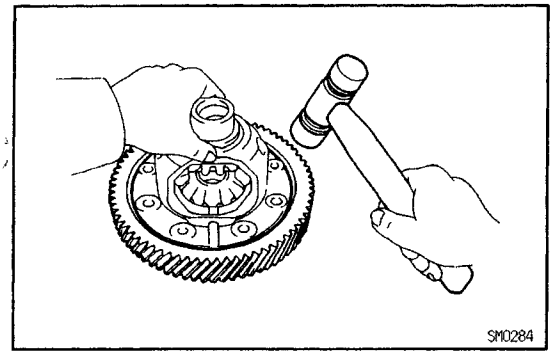

(d) Using a copper hammer, tap on the ring gear to remove it from the case.

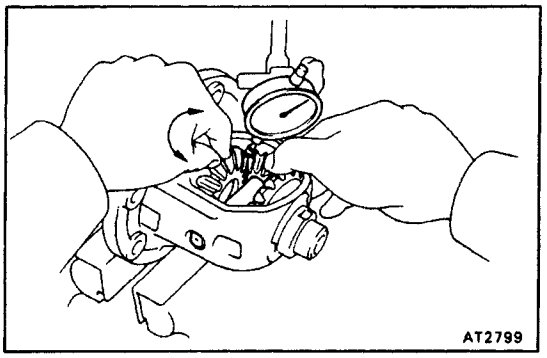

3. INSPECT SIDE GEAR BACKLASH

Using a dial indicator, measure the backlash of one side gear while holding one pinion toward the case.

Standard backlash:

0.05–0.20 m m (0.0020–0.0079 in.)

If the backlash does not meet specification, install the; correct thrust washer to the side gears.

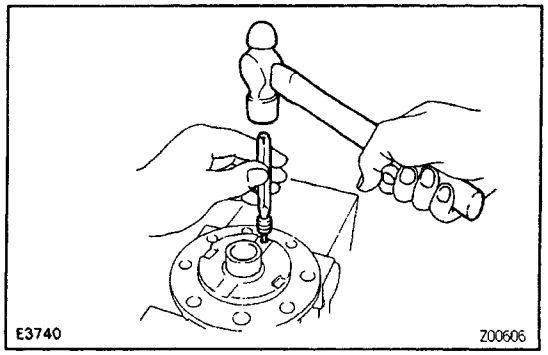

4. DISASSEMBLY DIFFERENTIAL CASE

(a) Using a pin punch and hammer, drive out the straight pin.

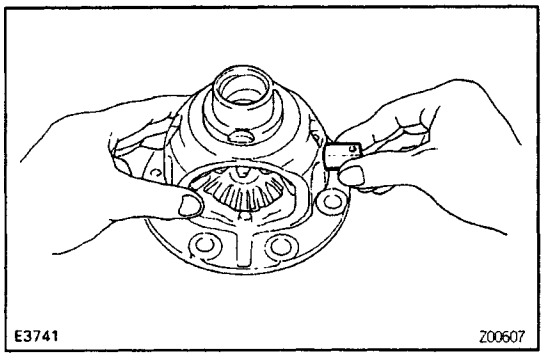

(b) Remove the pinion shaft from the case.
(c) Remove the two pinions and two side gears with the four thrust washers from each gear.

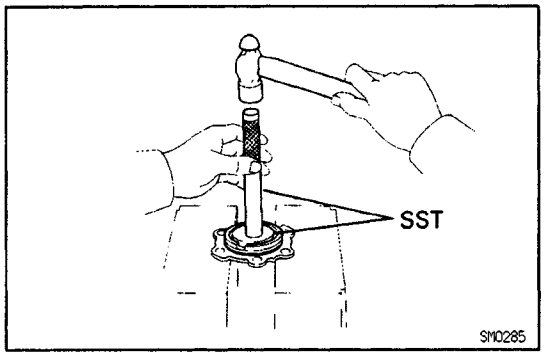

5. (TRANSMISSION CASE SIDE)
IF NECESSARY, REPLACE DIFFERENTIAL SIDE BEARING RETAINER OIL SEAL
(a) Using SST and a hammer, drive out the oil seal from the retainer.
SST 09608–20012 (09608–03020, 09608–03060)

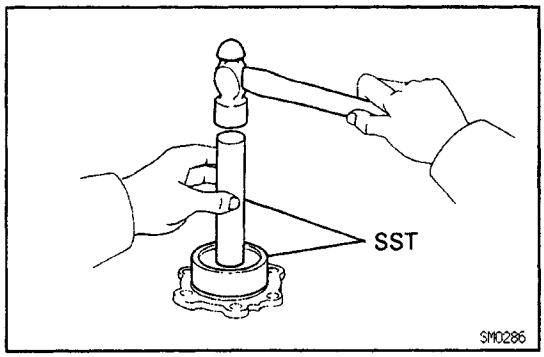

(b) Using SST and a hammer, drive in a new oil seal until its surface is flush with the case surface.
SST 09350–32014 (09351 –32130, 09351 –32150)
(c) Coat the lip of the oil seal with MP grease.

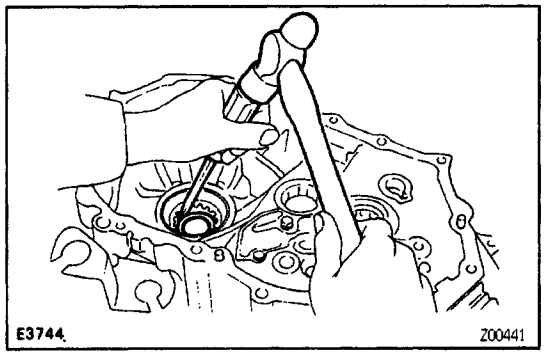

6. (TRANSAXLE CASE SIDE)
IF NECESSARY, REPLACE SIDE OIL SEAL
(a) Using a screwdriver and hammer, drive out the oil seal.

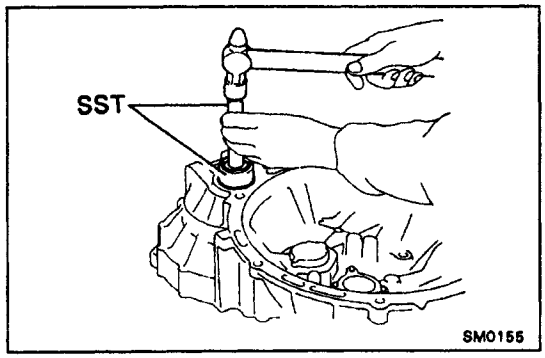

(b) Using SST and a hammer, drive in a new oil seal until its surface is flush with the case surface.
SST 09350–32014 (09351 –32130, 09351 –32150)
(c) Coat the lip of oil seal with MP grease.

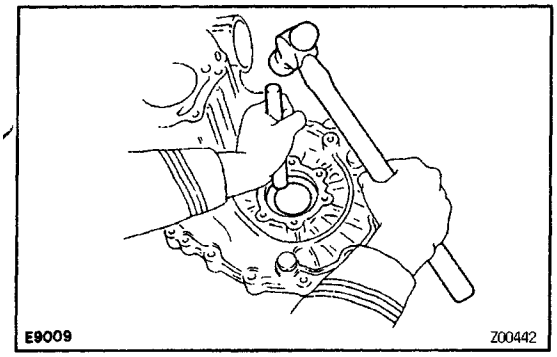

7. (TRANSMISSION CASE SIDE)

IF NECESSARY, REPLACE SIDE BEARING OUTER RACE

(a) Using a brass bar and hammer, drive out the bearing outer race.

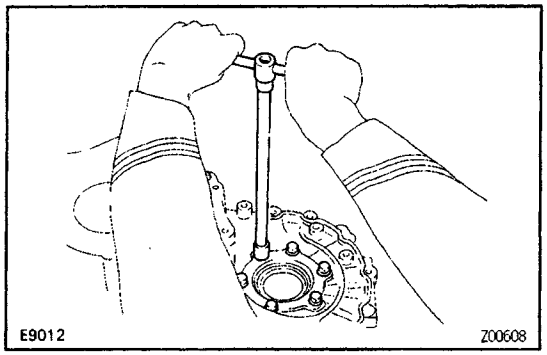

(b) Install the bearing retainer without an 0– ring.

(c) Install and torque the bearing retainer bolts.

Torque: 18 N–m (185 kgf–cm, 13 ft–lbf)

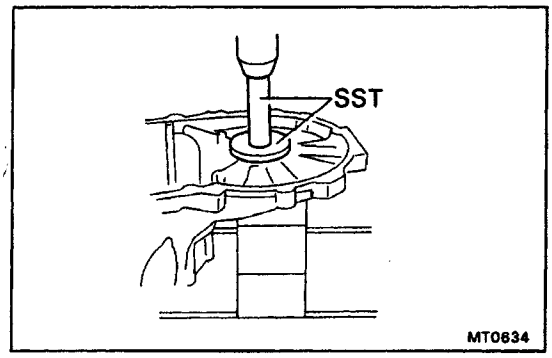

(d) Place the thinnest shim into the case.
(See table on page MX1–50)

(e) Using SST and a press, install a new bearing outer race.
SST 09608–20012 (09608–03020, 09608–03060)

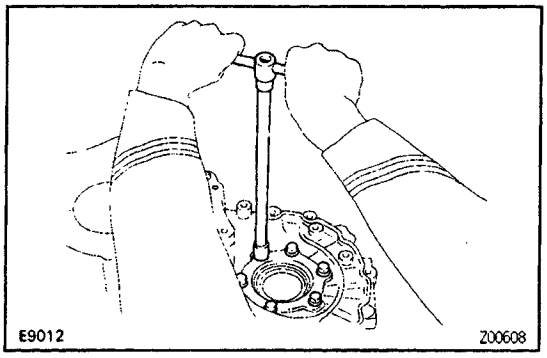

(f) Remove the retainer bolts.

(g) Remove the bearing retainer and shim.

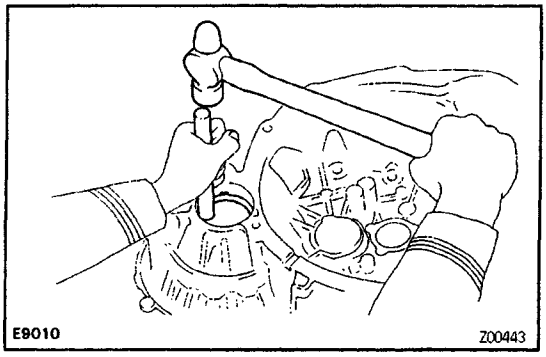

8. (TRANSAXLE CASE SIDE)

IF NECESSARY, REPLACE SIDE BEARING OUTER RACE

(a) Using a brass bar and hammer, drive out the bearing outer race and shim.

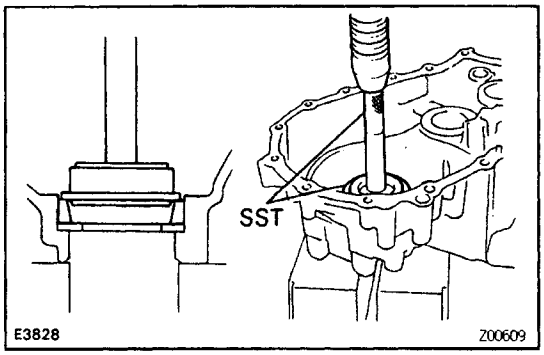

(b) Place the shim into the case.
(c) Using SST and a press, install a new bearing outer race.
SST 09608–20012 (09608–03020, 09608–03060)

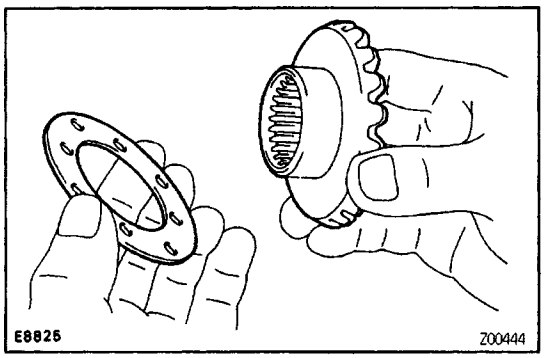

MX038–02

DIFFERENTIAL CASE ASSEMBLY (See page MX1–48)

1. ASSEMBLY DIFFERENTIAL CASE

(a) Install the correct thrust washers and side gears.
Referring to the table below, select thrust washers which will ensure that the backlash is within specifi–cation. Try to select washers of the same size for both sides.
Standard backlash:
0.05–0.20 mm (0.0020–0.0079 in.)

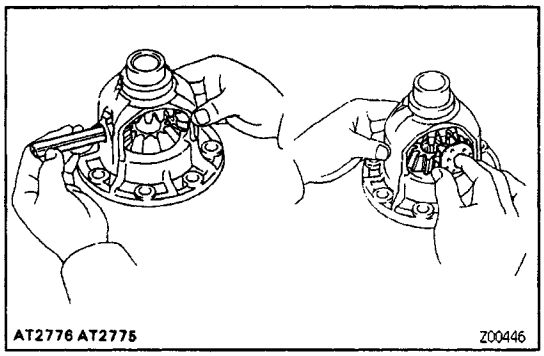

Thickness mm (in.)	Thickness mm (in.)
0.95 (0.0374)	1.10 (0.0433)
1.00 (0.0394)	1.15 (0.0453)
1.05 (0.0413)	1.20 (0.0472)

Install the thrust washers and side gears in the dif–ferential case.
(b) Install the pinion shaft.

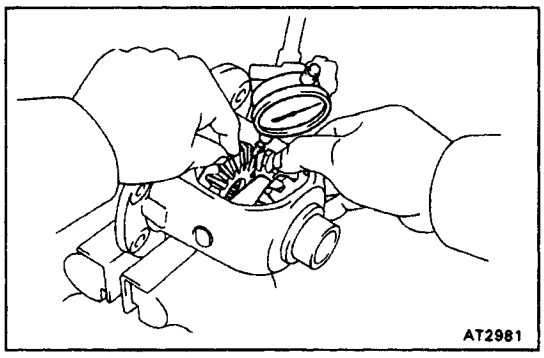

(c) Inspect the side gear backlash.
Measure the side gear backlash while holding one pinion gear toward the case.
Standard backlash:
0.05–0.20 mm (0.0020–0.0079 in.)
If the backlash is not within specification, install a thrust washer of different thickness.

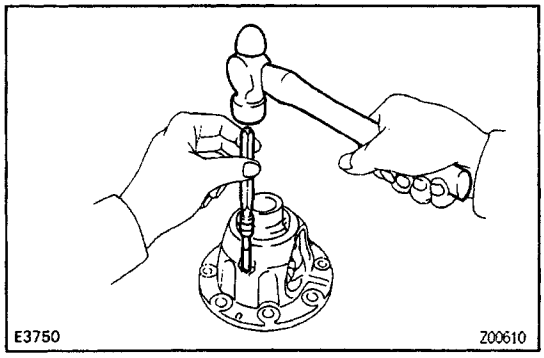

(d) Using a pin punch and hammer, drive in the straight pin through the case and hole in the pinion shaft.

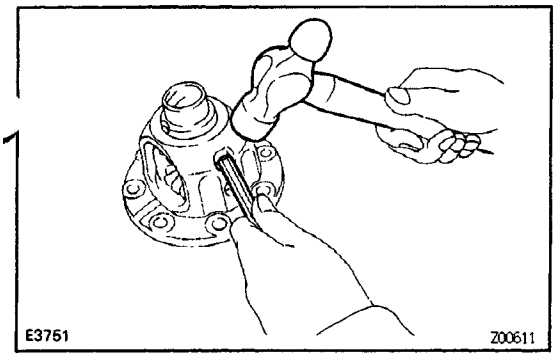

(e) Stake the differential case.

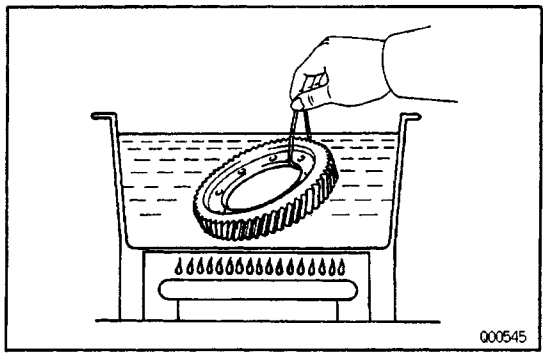

2. INSTALL RING GEAR ON DIFFERENTIAL CASE

(a) Clean the contact surface of the differential case and the threads of the ring gear and differential case.

(b) Heat the ring gear in boiling water.

(c) After moisture on the ring gear has completely eva–porated, quickly install the ring gear to the differential case.

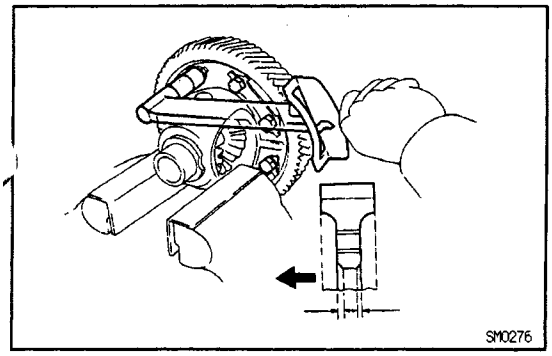

HINT: Align the matchmarks on the differential case and contact the ring gear.

(d) Temporarily install the eight bolts and four lock plates.

NOTICE: The ring gear set bolts should not be tightened until the ring gear has cooled sufficiently.

(e) After the ring gear has cooled sufficiently, torque the ring gear set bolts.

Torque: 90 N–m (920 kgf–cm, 67 ft–lbf)

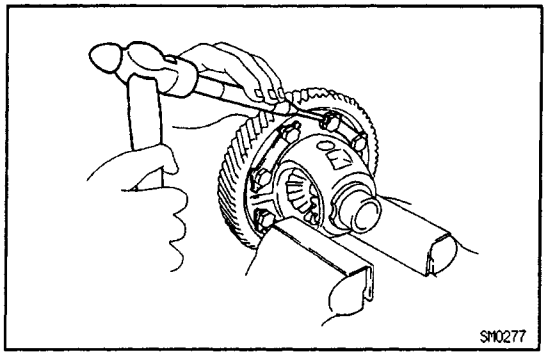

(f) Using a pin punch and hammer, stake the lock plates.

HINT: Stake one claw flush with the flat surface of the bolt. For the claw contacting the protruding portion of the bolt, stake only the half on the tighten side.

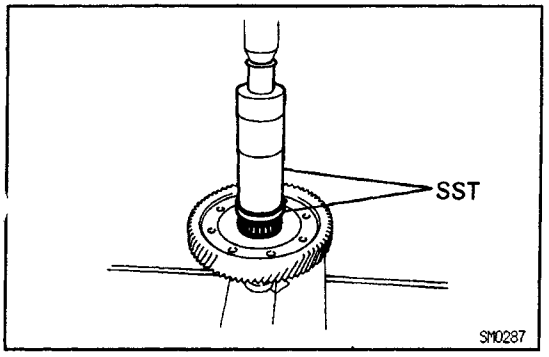

3. INSTALL SIDE BEARING TO DIFFERENTIAL CASE

(a) Using SST and a press, install the side bearing to the transmission case side.

SST 09316–60010 (09316–00010)
09350–32014 (09351 –32120)

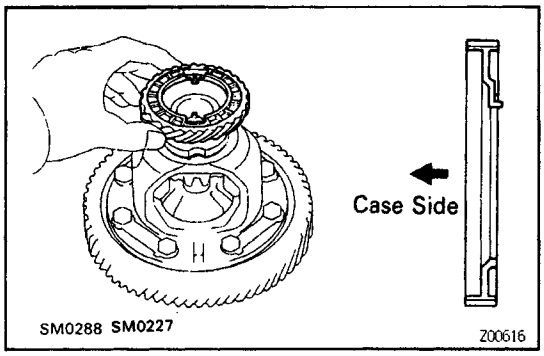

(b) install the vehicle speed pulse generator drive gear to the transaxle case side.

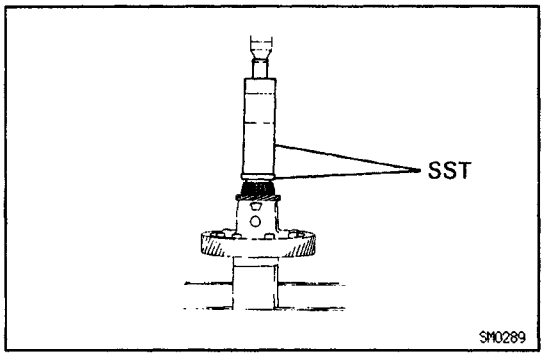

(c) Using SST and a press, install the side bearing to the transaxle case side.
SST 09316–60010 (09613–00010)
09350–32014 (09351 –32120)

NOTICE: Install the black cage bearing on the speedometer drive gear side.

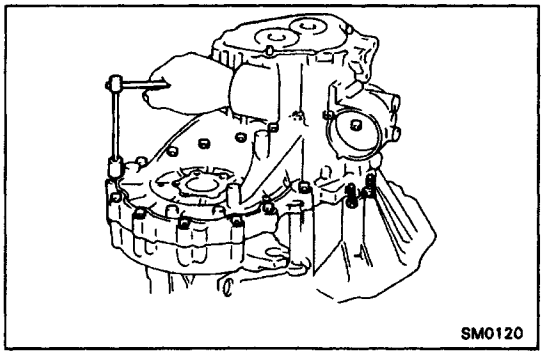

4. ADJUST DIFFERENTIAL CASE SIDE BEARING PRELOAD

(a) Install the differential to the transaxle case.
(b) Install the transmission case.
(e) Install and torque the case bolts.
Torque: 29 N–m (300 kgf–cm, 22 ft–lbf)

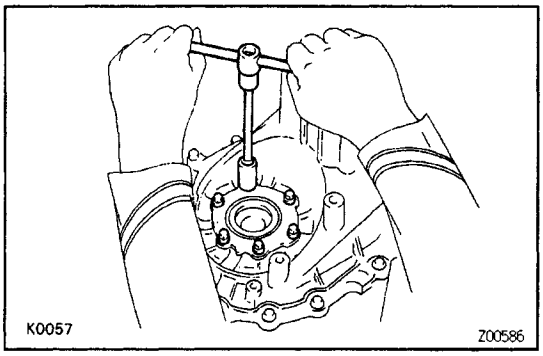

(d) Install the shim into the transmission case.
(e) Install the bearing retainer without an O–ring.
(f) Install and torque the retainer bolts.
Torque: 18 N–m (185 kgf–cm, 13 ft–lbf)

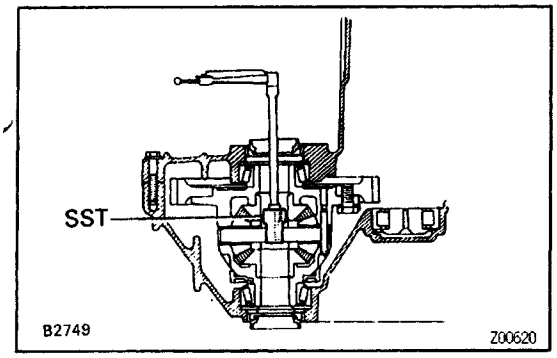

(g) Using SST and torque meter, measure the preload.
SST 09564–32011
Preload (at starting):
0.8–1.6 N–m (8–16 kgf–cm, 6.9–13.9 in.–lbf)
If the preload is not within specification, remove the transmission case side bearing retainer.
Select another shim.
HINT: The preload will change about 0.3–0.4 N–m (3–4 kgf–cm, 2.6–3.5 in.–lbf) with each shim thickness.

Mark	Thickness mm (in.)	Mark	Thickness mm (in.)
1	1.90 (0.0748)	11	2.40 (0.0945)
2	1.95 (0.0768)	12	2.45 (0.0965)
3	2.00 (0.0787)	13	2.50 (0.0984)
4	2.05 (0.0807)	14	2.55 (0.1004)
5	2.10 (0.0827)	15	2.60 (0.1024)
6	2.15 (0.0846)	16	2.65 (0.1043)
7	2.20 (0.0866)	17	2.70 (0.1063)
8	2.25 (0.0886)	18	2.75 (0.1083)
9	2.30 (0.0906)	19	2.80 (0.1102)
10	2.35 (0.0925)		

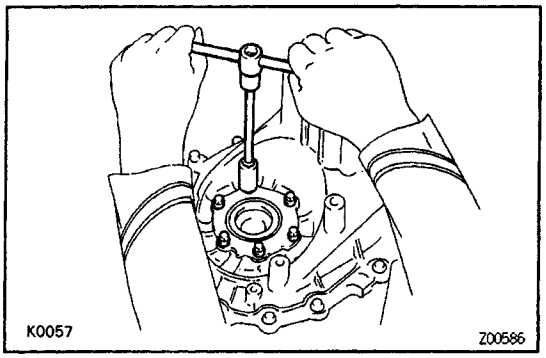

(h) Remove the retainer bolts.
(i) Remove the bearing retainer and shim.

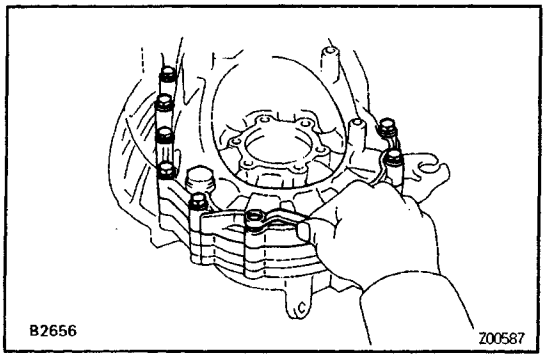

(j) Remove the case bolts.
(k) Remove the transmission case.

INPUT SHAFT

MX02H–01

COMPONENTS

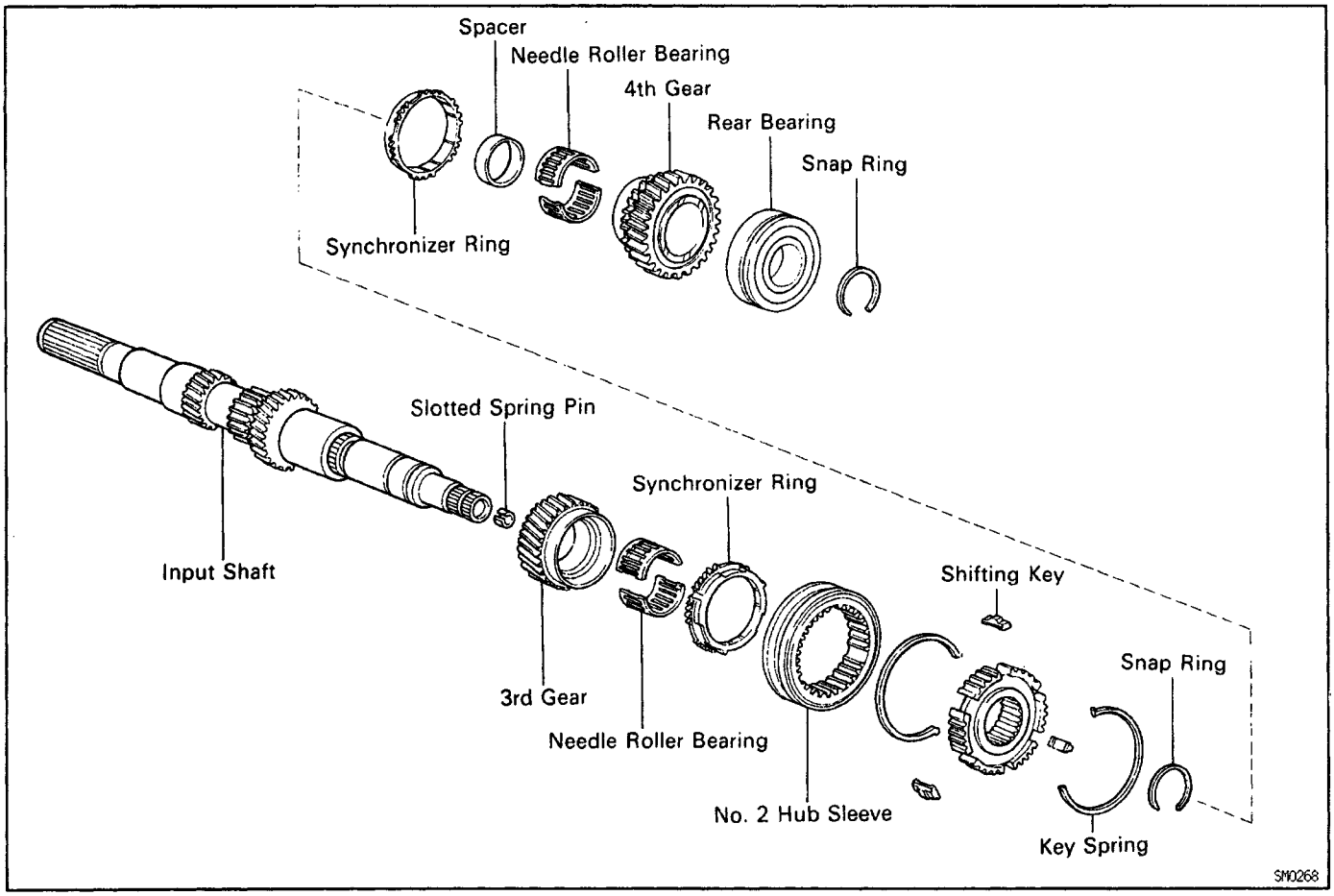

MXG94–01

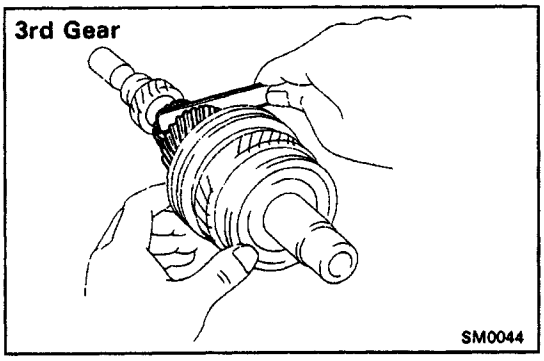

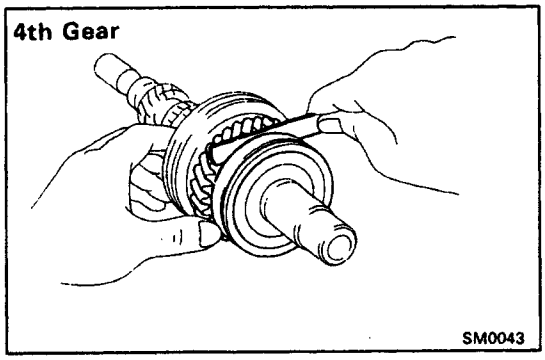

INPUT SHAFT DISASSEMBLY

1. INSPECT THIRD AND FOURTH GEAR THRUST CLEARANCE

Using a feeler gauge, measure the clearance.

Standard clearance:

3rd gear

0.10–0.25 mm (0.0039–0.0098 in.)

4th gear

0.20–0.45 mm (0.0079–0.0177 in.)

Maximum clearance:

3rd gear

0.30 mm (0.0118 in.)

4th gear

0.50 mm (0.0197 in.)

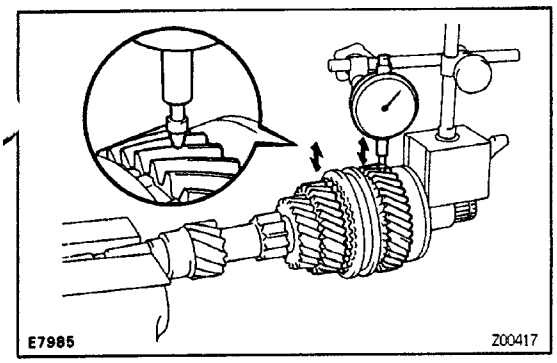

2. INSPECT THIRD AND FOURTH GEAR OIL CLEARANCE

Using dial indicator, measure the oil clearance between the gear and shaft.

Standard clearance:

0.009–0–053 mm (0.0004–0.0021 in.)

Maximum clearance:

0.070 mm (0.0028 in.)

If the clearance exceeds the maximum, replace the gear, needle roller bearing or shaft.

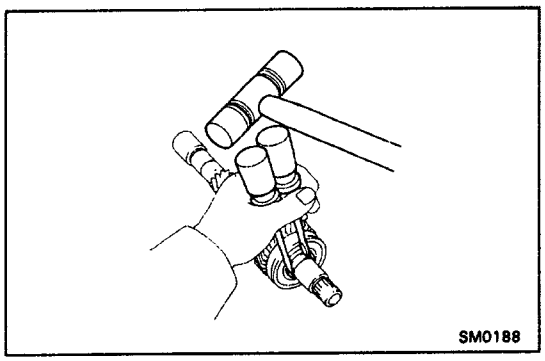

3. REMOVE SNAP RING

Using two screwdrivers and a hammer, tap out the snap ring.

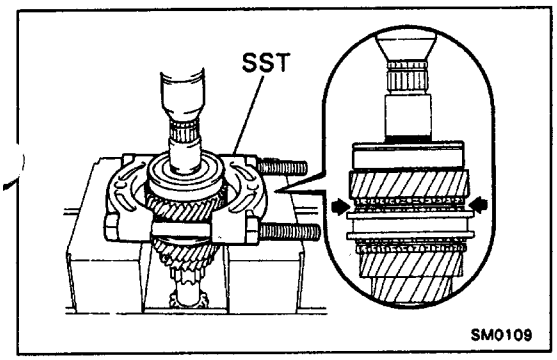

4. REMOVE REAR BEARING, FOURTH GEAR, NEEDLE ROLLER BEARINGS, SPACER AND SYNCHRONIZER RING FROM INPUT SHAFT

(a) Using SST and a press, remove the 4th gear and rear bearing.
SST 09950–00020

(b) Remove the needle roller bearings, spacer and synchronizer ring.

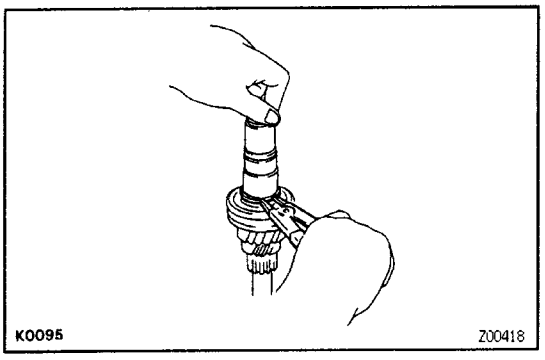

5. REMOVE SNAP RING

Using a snap ring expander, remove the snap ring.

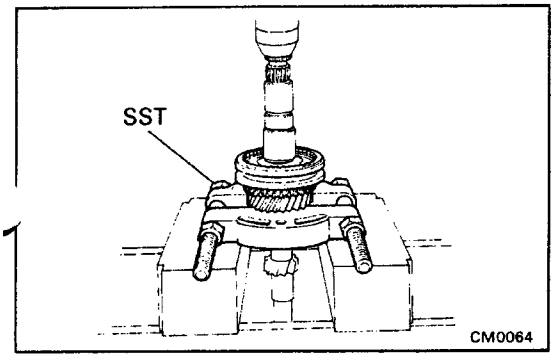

6. REMOVE NO.2 HUB SLEEVE ASSEMBLY, THIRD GEAR SYNCHRONIZER RING AND NEEDLE ROLLER BEARINGS

Using SST and a press, remove the No.2 hub sleeve, 3rd gear, synchronizer ring and needle roller bearings.
SST 09950–00020

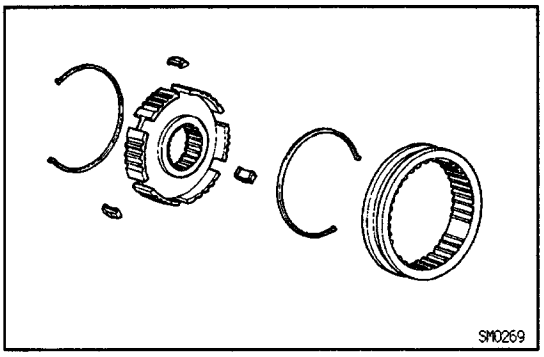

7. REMOVE NO.2 HUB SLEEVE, SHIFTING KEYS AND SPRINGS FROM NO.2 CLUTCH HUB

Using a screwdriver, remove the three shifting keys and two springs from the No.2 clutch hub.

INPUT SHAFT COMPONENTS INSPECTION

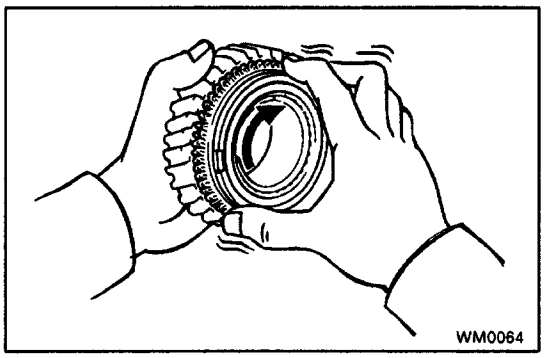

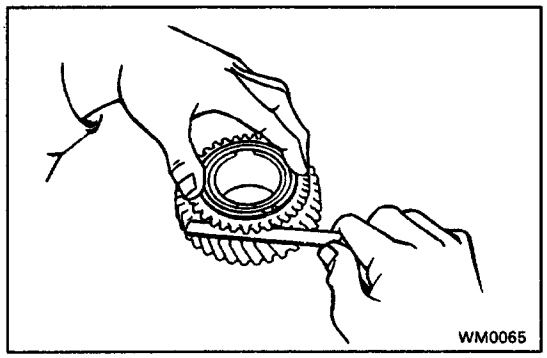

1. INSPECT SYNCHRONIZER RINGS

(a) Check for wear or damage.

(b) Check the braking effect of the synchronizer ring.

Turn the synchronizer ring in one direction while pushing it to the gear cone and check that the ring is locked.

If the braking effect is insufficient, lightly rub the synchronizer ring and gear cone by applying a small amount of fine lapping compound.

NOTICE:

- **Wash off completely the fine lapping compound after rubbing.**
- **Check again the braking effect of the synchronizer** ring.

(e) Using a feeler gauge, measure the clearance between the synchronizer ring back and gear spline end.

Minimum clearance:

0.6 mm (0.024 in.)

If the clearance is less than the minimum, replace the synchronizer ring and gear cone by applying a small amount of fine lapping compound.

NOTICE: Wash off completely the fine lapping compound after rubbing.

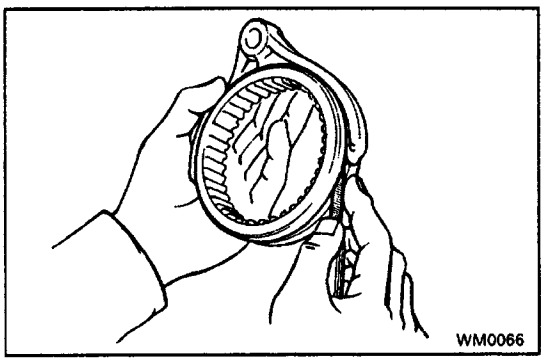

2. INSPECT CLEARANCE OF NO.2 SHIFT FORK AND HUB SLEEVE

Using a feeler gauge, measure the clearance between the hub sleeve and shift fork.

Maximum clearance:

1.0 mm (0.039 in.)

If the clearance exceeds the maximum, replace shift fork or hub sleeve.

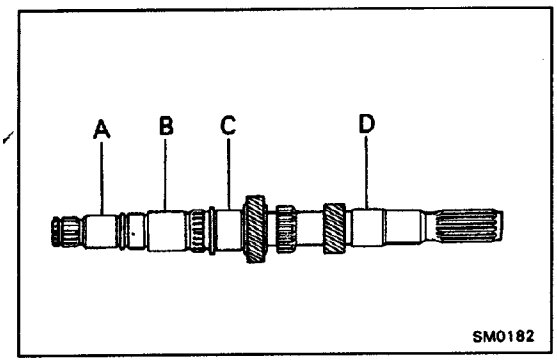

3. INSPECT INPUT SHAFT

(a) Check the input shaft for wear or damage.

(b) Using a micrometer, measure the outer diameter of the input shaft journal surface.

Minimum outer– diameter:

Part A

26.970 mm (1.0618 in.)

Part B

32.470 mm (1.2783 in.)

Part C

33.090 mm (1.3028 in.)

Part D

29.970 mm (1.1799 in.)

If the outer diameter is less than the minimum, replace the input shaft.

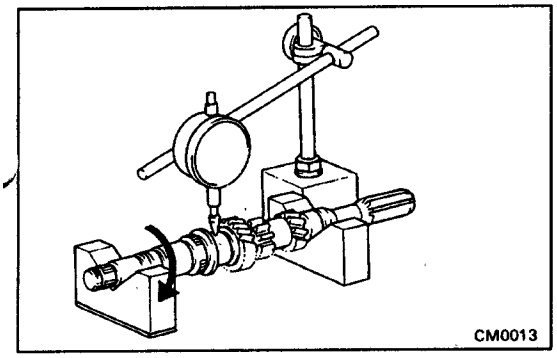

(c) Using a dial indicator, check the shaft runout.

Maximum runout:

0.05 mm (0.0020 in.)

If the outer diameter exceeds the minimum, replace the input shaft.

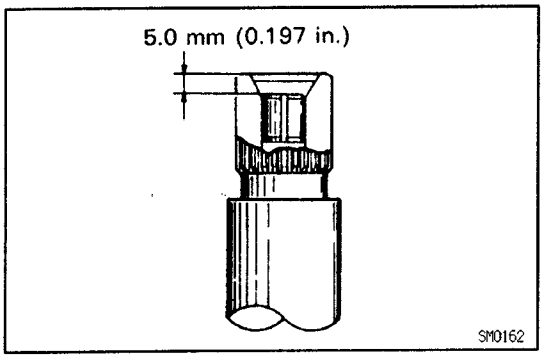

MX033–01

INPUT SHAFT ASSEMBLY

(See page MX1–32)

HINT: Coat all of the sliding and rotating surface with gear oil before assembly.

1. IF INPUT SHAFT WAS REPLACED, DRIVE IN SLOTTED SPRING PIN

If the input shaft was replaced, drive the slotted spring pin in the input shaft to a depth of 5.0 mm (0.197 in.).

2. INSTALL NO.2 CLUTCH HUB INTO HUB SLEEVE

(a) Install the clutch hub and shifting keys to the hub sleeve.

(b) Install the shifting key springs under the shifting keys.

NOTICE: Install the key springs positioned so that their end gaps are not line.

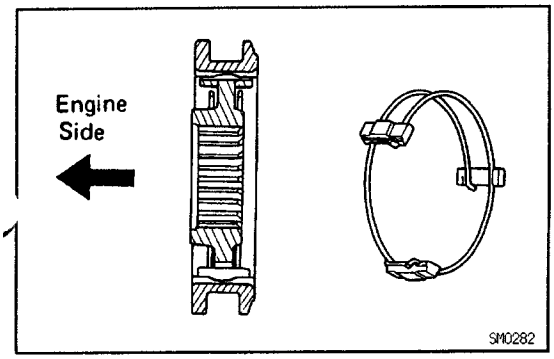

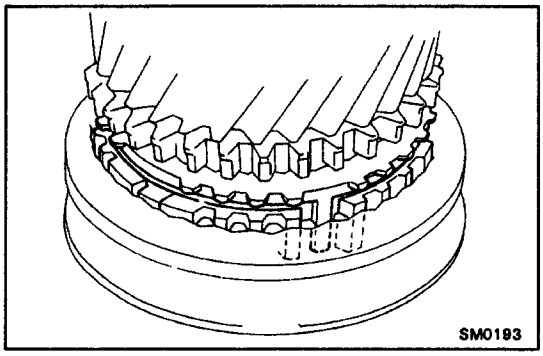

3. INSTALL THIRD GEAR, NEEDLE ROLLER BEARINGS, SYNCHRONIZER RING AND NO. 2 HUB SLEEVE ASSEMBLY TO INPUT SHAFT

(a) Apply gear oil to the needle roller bearings.

(b) Place the synchronizer ring on the gear and align the ring slots with the shifting keys.

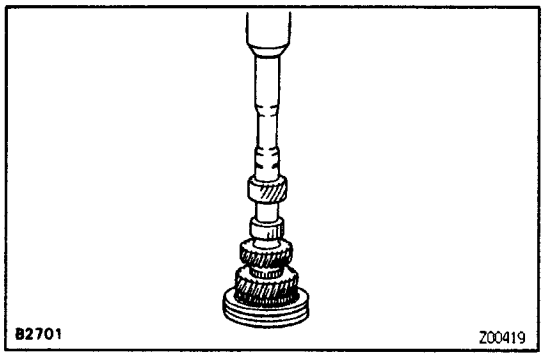

(c) Using a press, install the 3rd gear and No.2 hub sleeve.

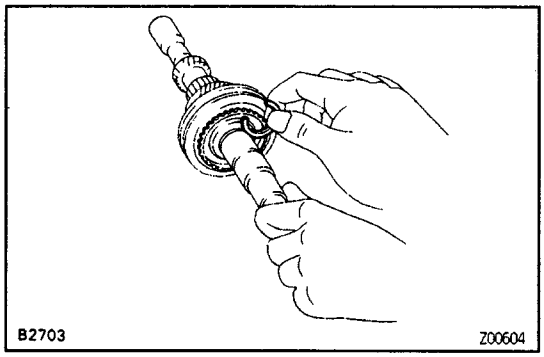

4. INSTALL SNAP RING

(a) Select a snap ring that will allow minimum axial play.

Mark	Thickness mm (in.)
1	1.95–2.00 (0.0768–0.0787)
2	2.00–2.05 (0.0787–0.0807)
3	2.05–2.10 (0.0807–0.0827)
4	2.10–2.15 (0.0827–0.0846)
5	2.15 – 2.20 (0.0846 – 0.0866)
6	2.20–2.25 (0.0866–0.0886)

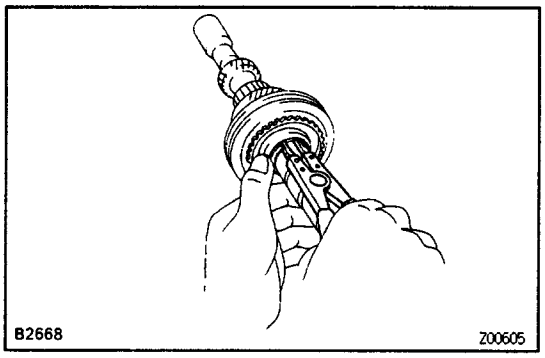

(b) Using a snap ring expander, install the snap ring.

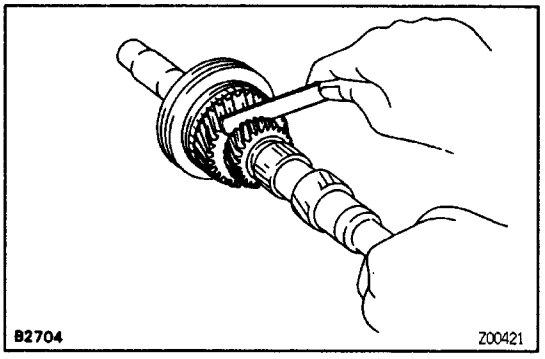

5. INSPECT THIRD GEAR THRUST CLEARANCE

Using a feeler gauge, measure the 3rd gear thrust clearance.

Standard clearance:

0.10–0.25 mm (0.0039–0.0098 in.)

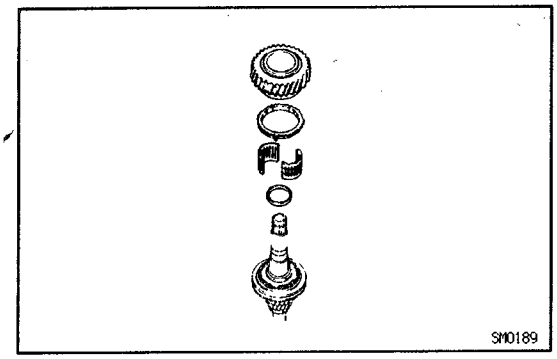

6. INSTALL SYNCHRONIZER RING. NEEDLE ROLLER BEARINGS, SPACER, FOURTH GEAR AND REAR BALL BEARING

(a) Apply gear oil to the needle roller bearings.

(b) Install the spacer and needle roller bearings.

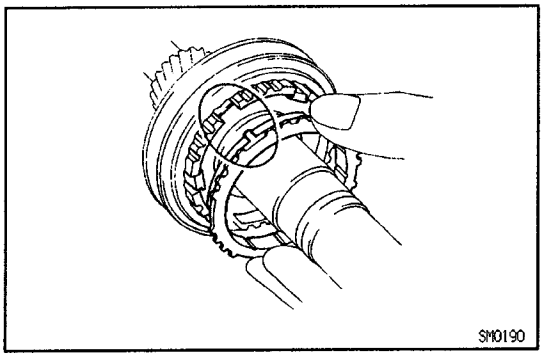

(c) Place the synchronizer ring on the gear.

HINT: Align the ring slots with the shifting keys, and the ring projections with the hub slots.

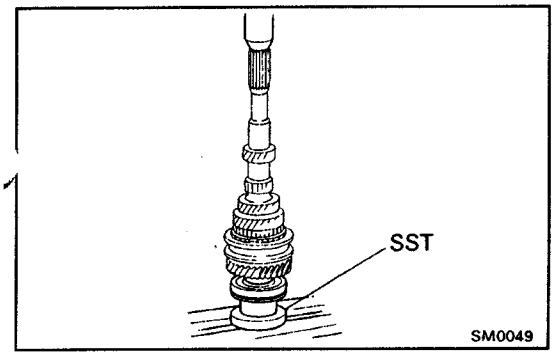

(d) Using SST and a press, install the rear ball bearing.

SST 09608–12010 (09608–00070)

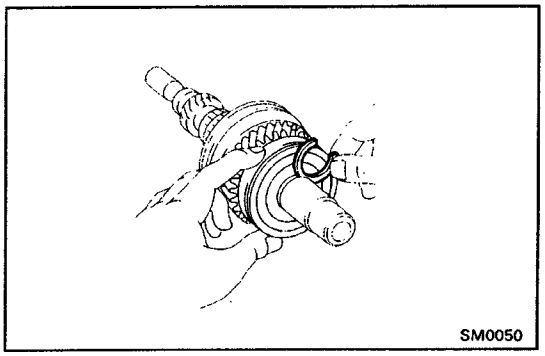

7. INSTALL SNAP RING

(a) Select a snap ring that will allow minimum axial play.

Mark	Thickness mm (in.)
A	2.15–2.20 (0.0846–0.0866)
B	2.20–2.25 (0.0866–0.0886)
C	2.25–2.30 (0.0886–0.0906)
D	2.30–2.35 (0.0906–0.0925)
E	2.35–2.40 (0.0925–0.0945)

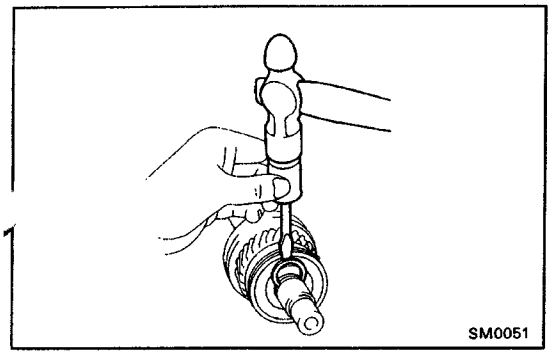

(b) Using a screwdriver and hammer, tap in the snap ring.

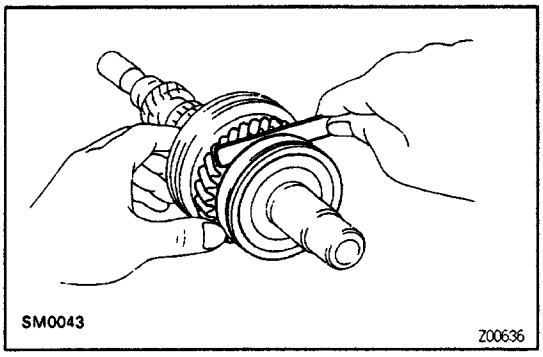

8. INSPECT FOURTH GEAR THRUST CLEARANCE

Using a feeler gauge, measure 4th gear thrust clear–ance.

Standard clearance:

0.20–0.45 m m (0.0078–0.0177 in.)

OPERATION

- The illustration below show the engagements of transaxle gears.

MX024–01

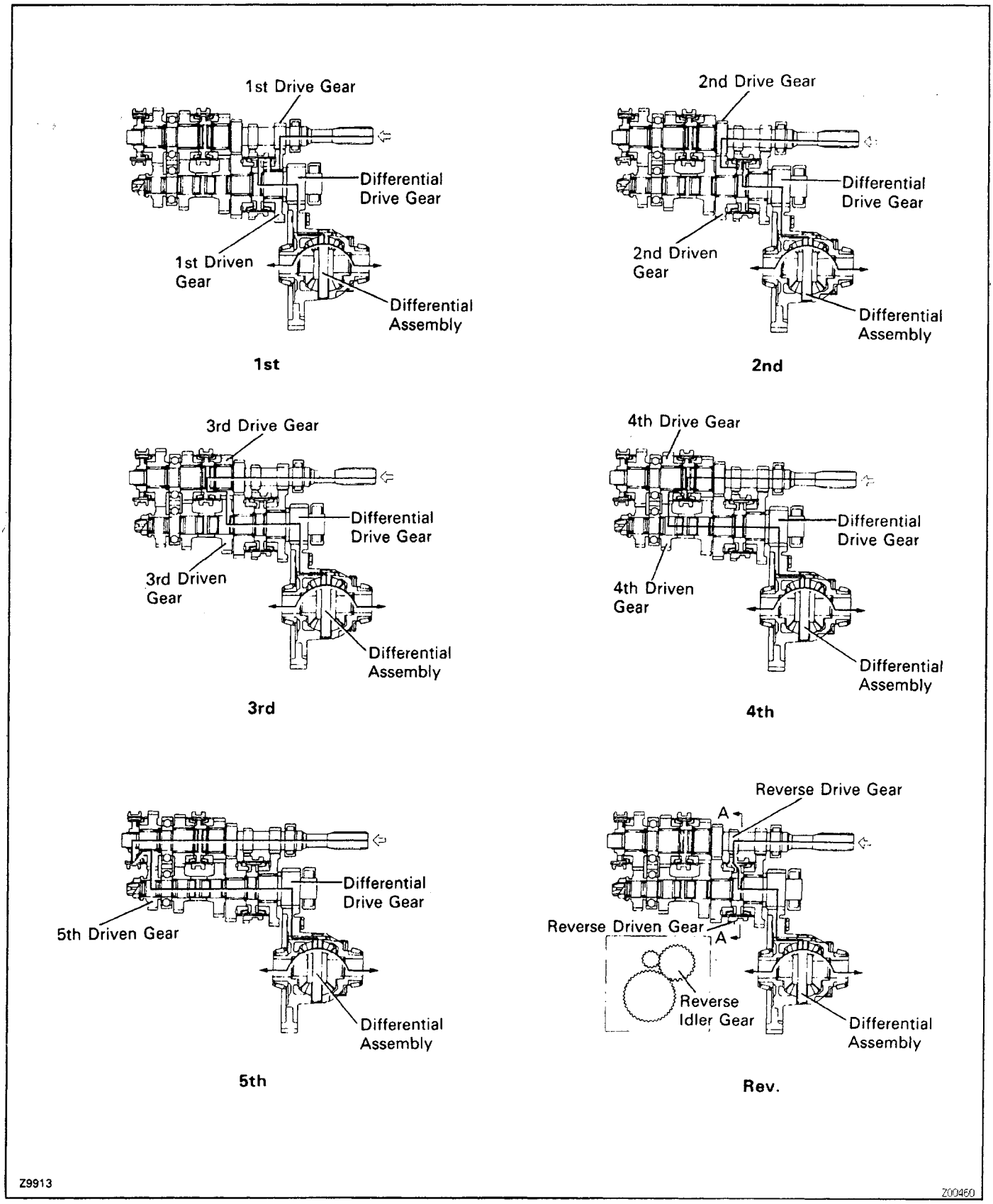

OUTPUT SHAFT

MX02M–01

COMPONENTS

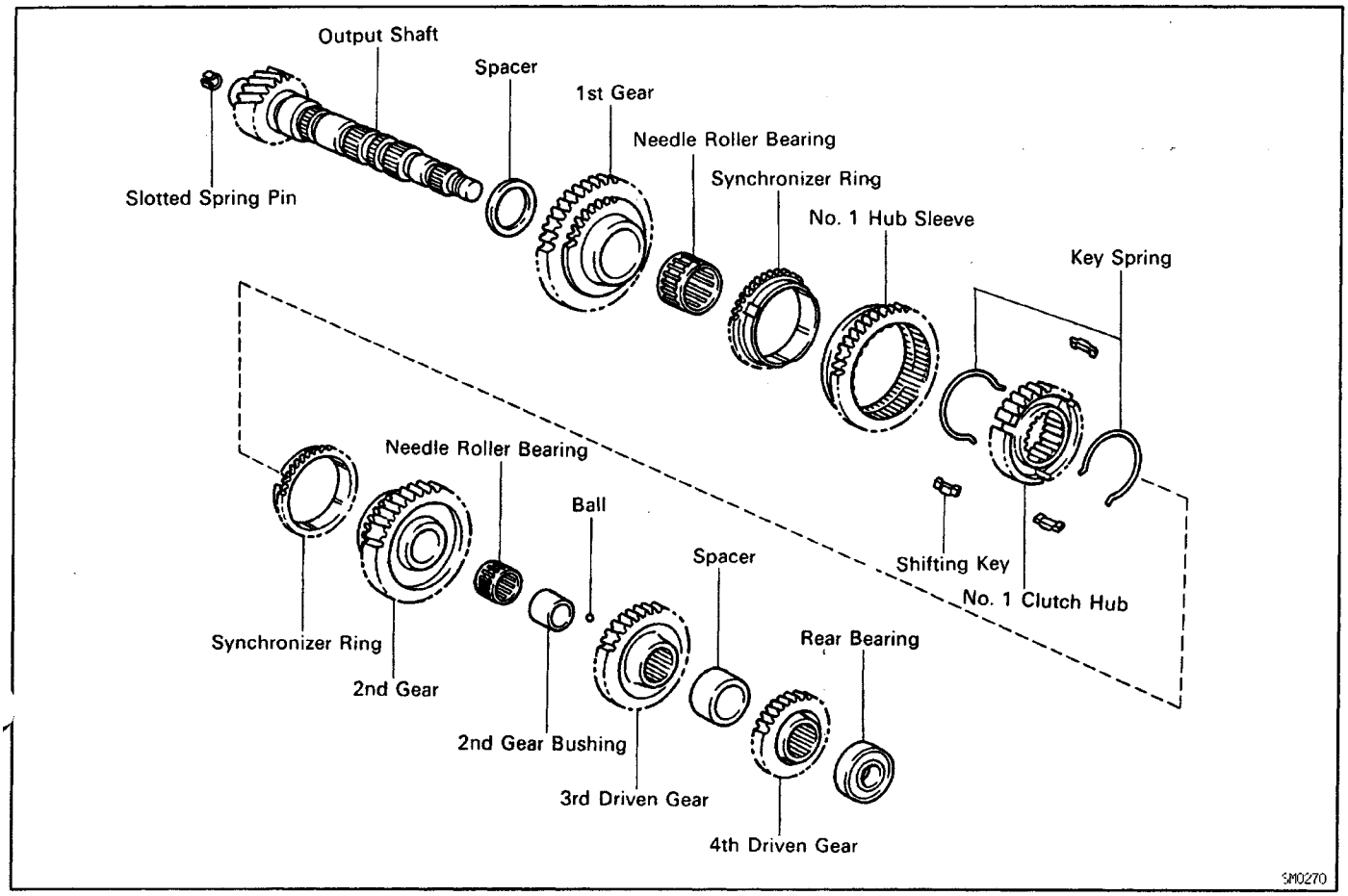

MX037–01

OUTPUT SHAFT DISASSEMBLY

1. INSPECT FIRST AND SECOND GEAR THRUST CLEARANCE

Using a feeler gauge, measure the thrust clearance.

Standard clearance:

1st gear

0.10–0.29 mm (0.0039–0.0114 in.)

2nd gear

0.20–0.44 mm (0.0079–0.0173 in.)

Maximum clearance:

1st gear

0.35 mm (0.0138 in.)

2nd gear

0.50 mm (0.0197 in.)

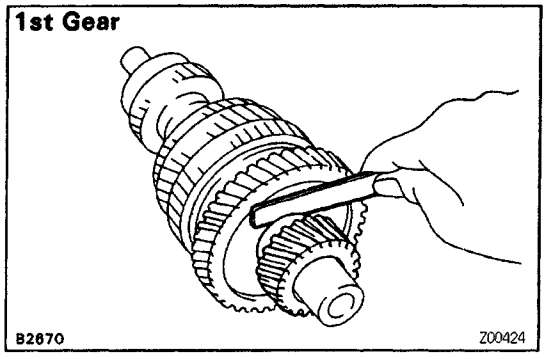

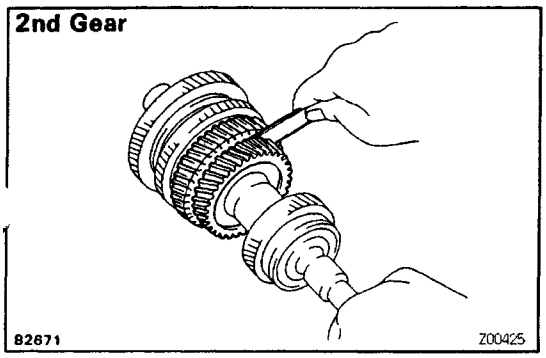

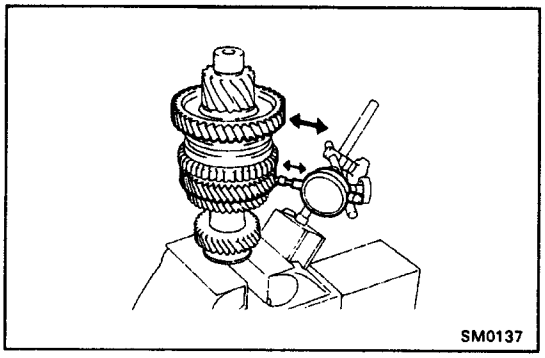

2. INSPECT FIRST AND SECOND GEAR OIL CLEARANCE

Using dial indicator, measure the oil clearance between the gear and shaft.

Standard clearance:

0.009–0.053 mm (0.0004–0.0021 in.)

Maximum clearance:

0.070 mm (0.0028 in.)

If the clearance exceeds the maximum, replace the gear, needle roller bearing or shaft.

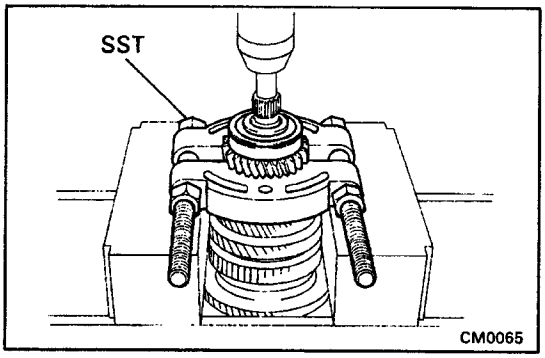

3. REMOVE REAR BALL BEARING, FOURTH DRIVEN GEAR AND OUTPUT GEAR SPACER

(a) Using SST and a press, remove the rear ball bearing and 4th driven gear.
SST 09950–00020

(b) Remove the output gear spacer and ball.

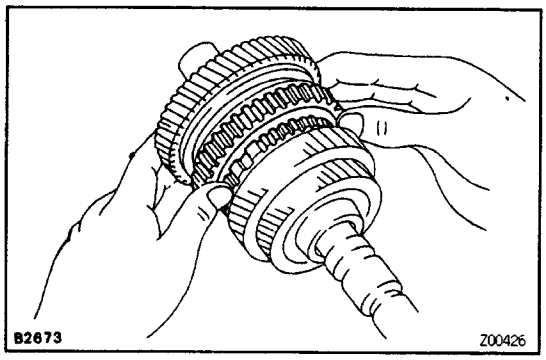

4. REMOVE THIRD DRIVEN GEAR, SECOND GEAR, NEEDLE ROLLER BEARING AND SYNCHRONIZER RING

(a) Shift the No. 1 hub sleeve into the 1st gear.

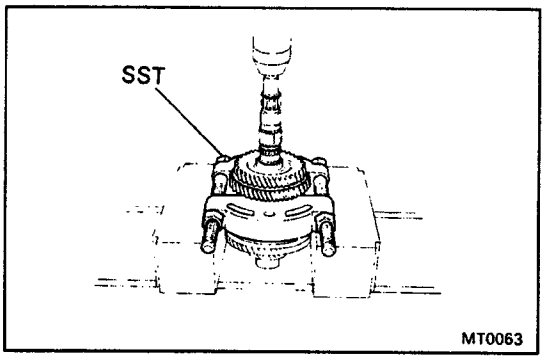

(b) Using SST and a press, remove the 3rd driven gear and 2nd gear.
SST 09950–00020

(c) Remove the needle roller bearing and synchronizer ring.

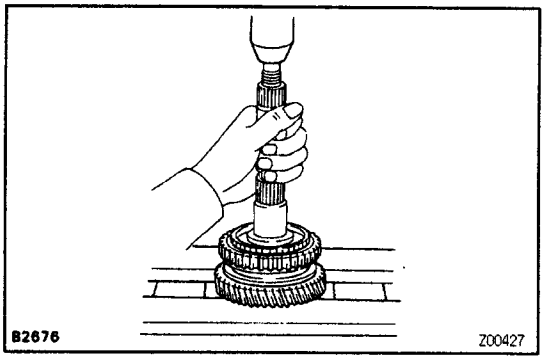

5. REMOVE NO. 1 HUB SLEEVE ASSEMBLY, FIRST GEAR, SYNCHRONIZER RING, NEEDLE ROLLER BEARING, THRUST WASHER AND LOCKING BALL

(a) Using a press, remove the No.1 hub sleeve, 1st gear and synchronizer ring.

(b) Remove the needle roller bearing and locking ball.

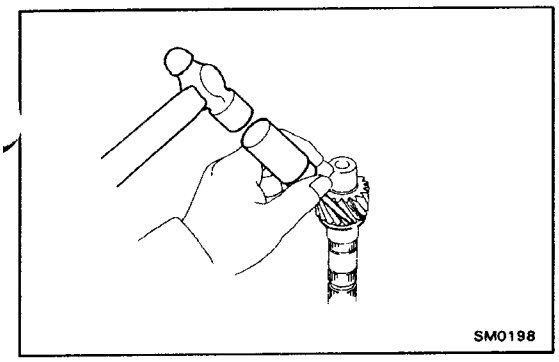

(c) Using a screwdriver and hammer, drive out the thrust washer.

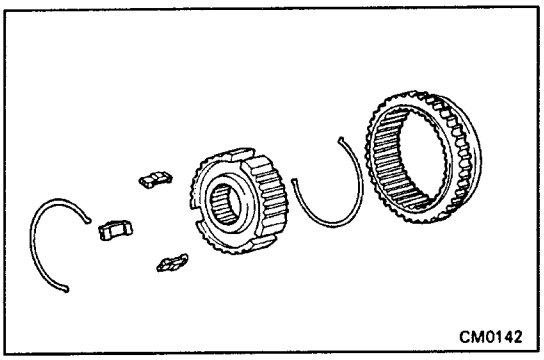

6. REMOVE NO.1 HUB SLEEVE, SHIFTING KEYS AND SPRINGS FROM NO.1 CLUTCH HUB

Using a screwdriver, remove the three shifting keys and spring from the No.1 clutch hub.

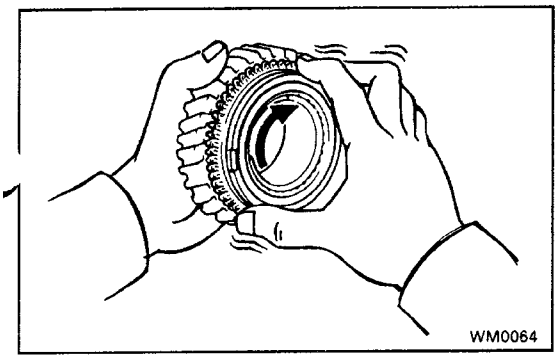

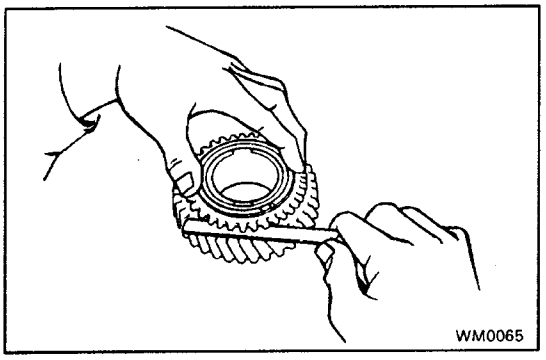

OUTPUT SHAFT COMPONENT PARTS INSPECTION

MX02P–01

1. INSPECT SYNCHRONIZER RINGS

(a) Check for wear or damage.

(b) Check the braking effect of the synchronizer ring.

Turn the synchronizer ring in one direction while pushing it to the gear cone and check that the ring is locked.

If the braking effect is insufficient, lightly rub the synchronizer ring and gear cone by applying a small amount of fine lapping compound.

NOTICE:

- **Wash off completely the fine lapping compound after rubbing.**
- **Check again the braking effect of the synchronizer ring.**

(c) Using a feeler gauge, measure the clearance between the synchronizer ring back and the gear spline end.

Minimum clearance:

0.6 mm (0.024 in.)

If the clearance is less than the minimum, replace the synchronizer ring and gear cone by applying a small amount of fine lapping compound.

NOTICE: Wash off completely the fine lapping compound after rubbing.

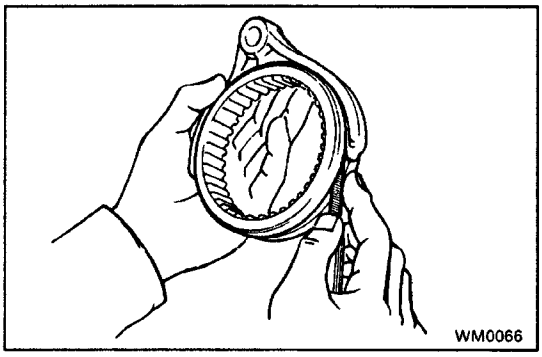

2. INSPECT CLEARANCE OF SHIFT FORKS AND HUB SLEEVES

Using a feeler gauge, measure the clearance between the hub sleeve and shift fork.

Maximum clearance:

1.0 mm (0.039 in.)

If the clearance exceeds the maximum, replace the shift fork or hub sleeve.

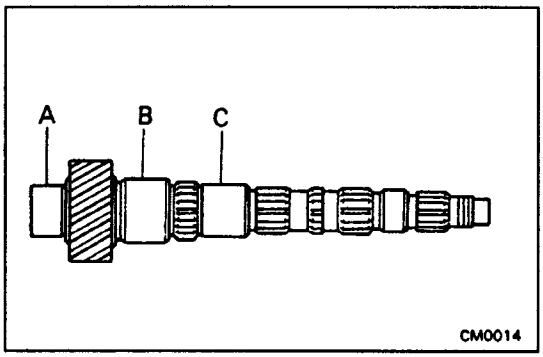

3. INSPECT OUTPUT SHAFT

(a) Using a micrometer, measure the outer diameter of the output shaft journal surface.

Minimum outer diameter:

Part A

31.970 mm (1.2587 in.)

Part B

37.970 mm (1.4849 in.)

Part C

31.990 mm (1.2594 in.)

If the outer diameter is less than the minimum, replace the output shaft.

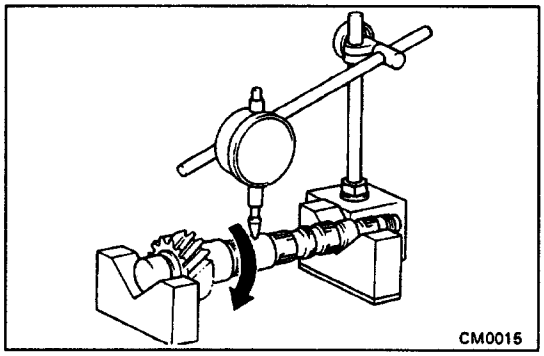

(b) Using a dial indicator, check the shaft runout.

Maximum runout:

0.05 mm (0.0020 in.)

If the runout exceeds the maximum, replace the output shaft.

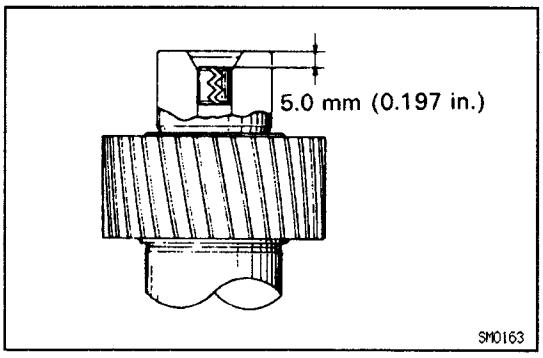

MX02Q–01

OUTPUT SHAFT ASSEMBLY (See page MX1–39)

1. IF OUTPUT SHAFT WAS REPLACED, DRIVE IN SLOTTED SPRING PIN

If the output shaft was replaced, drive the slotted spring pin in the output shaft to a depth of 5.0 mm (0.197 in.).

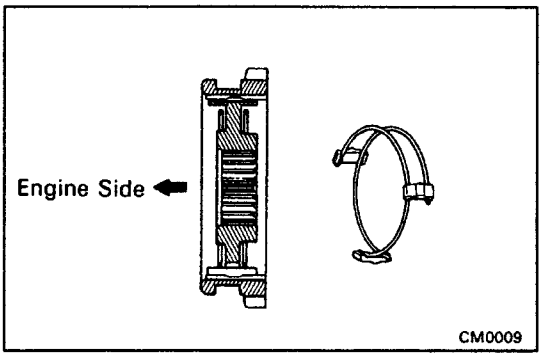

2. INSTALL NO.1 CLUTCH HUB INTO SLEEVE

(a) Install the clutch hub and shifting keys to the hub sleeve.

(b) Install the shifting key springs under the shifting keys.

NOTICE: Install the key springs positioned so that their end gaps are not in line.

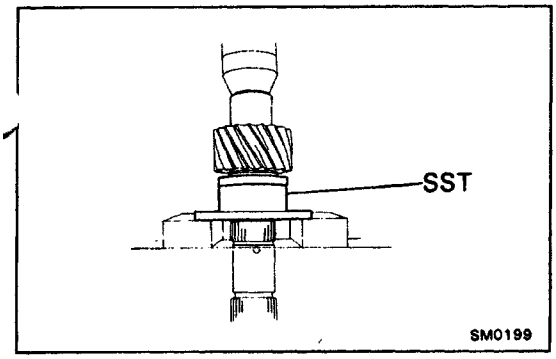

3. INSTALL THRUST WASHER, FIRST GEAR, NEEDLE ROLLER BEARING, SYNCHRONIZER RING AND NO. 1 HUB SLEEVE TO OUTPUT SHAFT

(a) Using SST and a press, install the thrust washer.
SST 09316–60010 (09316–00040)

(b) Apply gear oil to the needle roller bearing.

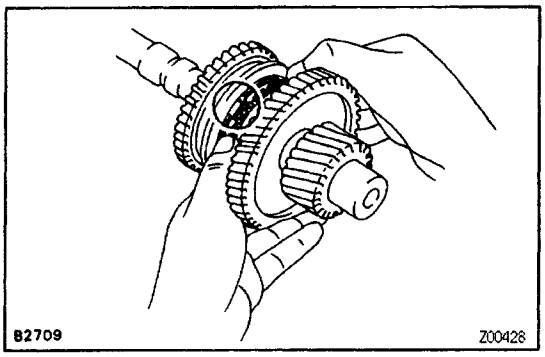

(c) Place the synchronizer ring on the gear and align the ring slots with the shifting keys.

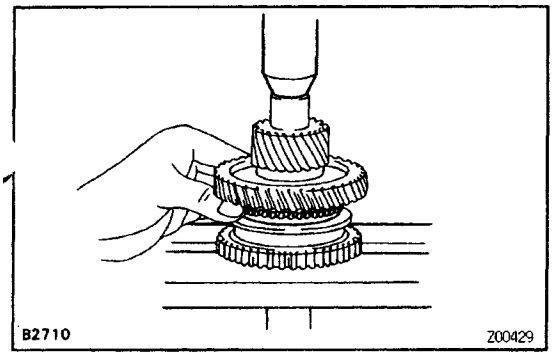

(d) Using a press, install the 1st gear and No. 1 hub sleeve.

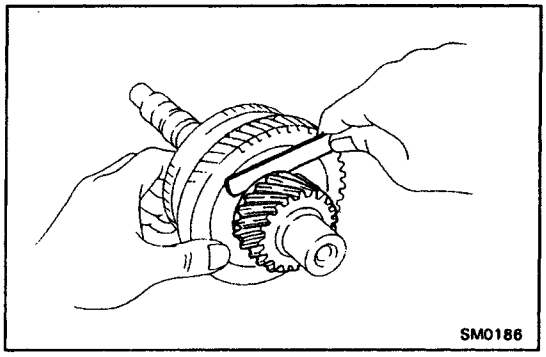

4. INSPECT FIRST GEAR THRUST CLEARANCE

Using a feeler gauge, measure the 1st gear thrust clearance.

Standard clearance:
0.10–0.29 mm (0.0039–0.0114 in.)

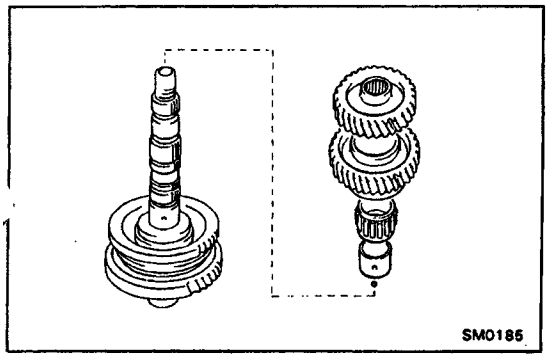

5. INSTALL SYNCHRONIZER RING, SECOND GEAR, NEEDLE ROLLER BEARING AND THIRD DRIVEN GEAR

(a) Place the synchronizer ring on the gear and align the ring slots with shifting keys.

(b) Apply gear oil to the needle roller bearing.

(c) Install the ball.

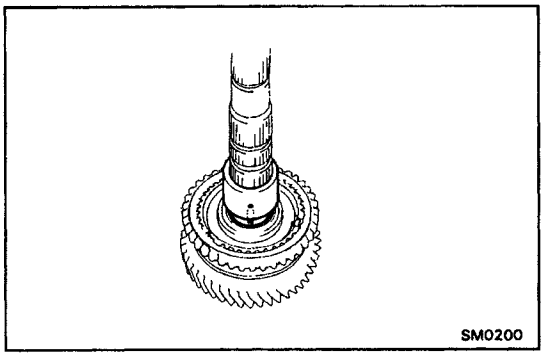

(d) Fit the 2nd gear bushing groove securely over the ball when installing the 2nd gear bushing on the shaft.
(e) Install the 2nd gear.

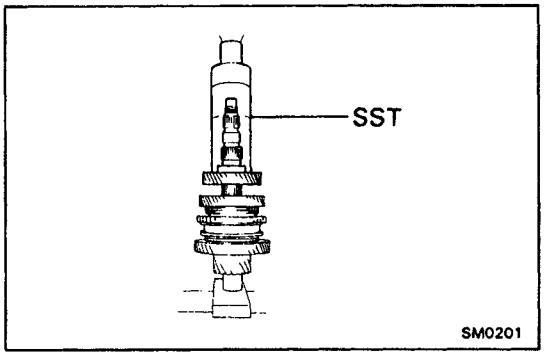

(f) Using SST and a press, install the 3rd driven gear.
SST 09316 – 60010 (09316 – 00010)

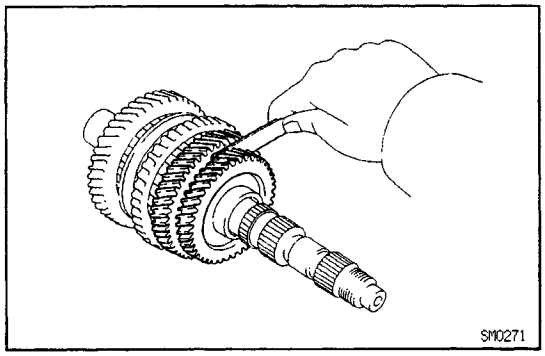

6. INSPECT SECOND GEAR THRUST CLEARANCE

Using a feeler gauge, measure the 2nd gear thrust clearance.

Standard clearance:

0.20–0.44 mm (0.0079–0.0173 in.)

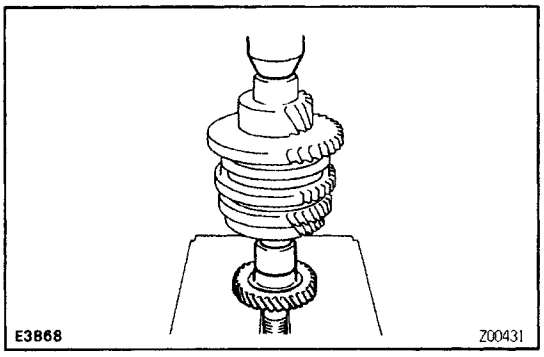

7. INSTALL OUTPUT GEAR SPACER, FOURTH DRIVEN GEAR AND RADIAL BALL BEARING

(a) Install the outer gear spacer.
(b) Using a press, install the 4th driven gear and bearing.

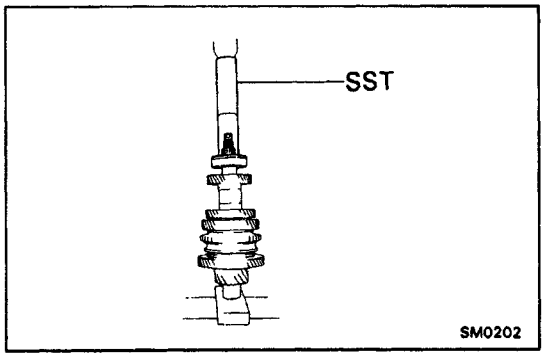

8. INSTALL REAR BEARING

Using SST and a press, install the rear bearing.
SST 09612–22011

PREPARATION

SST (SPECIAL SERVICE TOOLS)

	09308–00010 Oil Seal Puller	
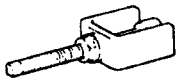	09309–12020 5th Driven Gear Replacer	
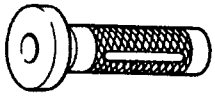	09310–35010 Countershaft Bearing Replacer	Output shaft front bearing
	09316–60010 Transmission & Transfer Bearing Replacer	
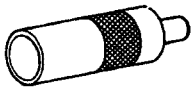	(09316–00010) Replacer Pipe	
	(09316–00040) Replacer “C”	
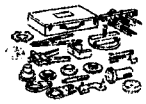	09350–32014 TOYOTA Automatic Transmission Tool Set	
	(09351–32120) Overdrive Bearing Replacer	Differential side bearing
	(09351–32130) Handle	
	(09351–32150) oil Seal Replacer	Differential side bearing Oil seal (Transaxle case side)
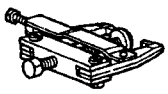	09502–10012 Differential Preload Puller	
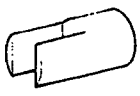	09564–32011 Differential Preload Adaptor	
	09608–12010 Front Hub & Drive Pinion Bearing Replacer Set	

	(09608–00070) Drive Pinion Rear Bearing Cone Replacer	Input shaft rear bearing 4th drive gear and rear bearing
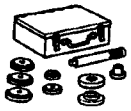	09608–20012 Front Hub & Drive Pinion Bearing Tool Set	
	(09608–00080) Replacer	Input shaft front oil seal
	(09608–03020) Handle	
	(09608–03060) Replacer	Differential taper roller bearing outer race (Transaxle case side)
	09612–22011 Tilt Handle Bearing Replacer	
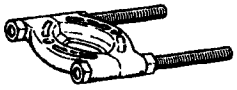	09950–00020 Bearing Remover	
	09950–20017 Universal Puller	

MX026–01

RECOMMENDED TOOLS

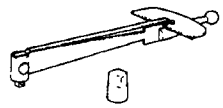	09025–00010 small Torque Wrench	Differential preload
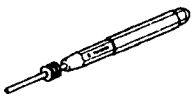	09031–00030 Pin Punch	
	09905–00012 Snap Ring No. 1 Expander	

MX027–01

EQUIPMENT

Dial indicator	
Torque wrench	
Feeler gauge	

MX028–01

LUBRICANT

Item	Capacity	Classification
Manual transaxle oil	2.6 liters (2.7 US qts, 2.3 Imp.qts)	API GL–3, 4 or 5 SAE 75W–90

MX029–01

SSM (SPECIAL SERVICE MATERIALS)

08826–00090	Seal Packing 1281, Three bond 1281 or equivalent	Transmission case x Transaxle case Transmission case x Case cover
08833–00080	Adhesive 1344, THREE BOND 1344, LOCTITE 242 or equivalent	Straight screw plug Control shaft cover bolt

SERVICE SPECIFICATIONS

MX030–02

SERVICE DATA

Input shaft roller bearing journal diameter	
Limit	29.970 mm (1.1799 in.)
Input shaft 3rd gear journal diameter	
Limit	33.090 mm (1.3028 in.)
Input shaft 4th gear journal diameter	
Limit	32.470 mm (1.2783 in.)
Input shaft 5th gear journal diameter	
Limit	26.970 mm (1.0618 in.)
Input shaft runout	
Limit	0.05 mm (0.0020 in.)
Output shaft roller bearing journal diameter	
Limit	31.970 mm (1.2587 in.)
Output shaft 1st gear journal diameter	
Limit	37.970 mm (1.4949 in.)
Output shaft 2nd gear journal diameter	
Limit	31.990 mm (1.2594 in.)
Output shaft runout	
Limit	0.05 mm (0.0020 in.)
Gear thrust clearance 1st	
STD	0.10–0.29 mm (0.0039–0.0114 in.)
Limit	0.35 mm (0.0138 in.)
Gear thrust clearance 2nd	
STD	0.20–0.44 mm (0.0079–0.0173 in.)
Limit	0.50 mm (0.0197 in.)
Gear thrust clearance 3rd	
STD	0.10–0.25 mm (0.0039–0.0098 in.)
Limit	0.30 mm (0.0118 in.)
Gear thrust clearance 4th	
STD	0.20–0.45 mm (0.0079–0.0177 in.)
Limit	0.50 mm (0.0197 in.)
Gear thrust clearance 5th	
STD	0.20–0.40 mm (0.079–0.0157 in.)
Limit	0.45 mm (0.0177 in.)
Gear oil clearance 1st,2nd,3rd and 4th	
STD	0.009–0.053 mm (0.0004–0.0021 in.)
Limit	0.070 mm (0.0028 in.)
Gear oil clearance 5th	
STD	0.009–0.050 mm (0.0004–0.0020 in.)
Limit	0.070 mm (0.0028 in.)
Shift fork to hub sleeve clearance	
Limit	1.0 mm (0.039 in.)
Synchronizer ring to gear clearance	
Limit	0.6 mm (0.024 in.)

Input shaft snap ring thickness		
No.2 clutch hub	Mark 1	1.95 – 2.00 mm (0.0768 – 0.0787 in.)
No.2 clutch hub	Mark 2	2.00 – 2.05 mm (0.0787 – 0.0807 in.)
No.2 clutch hub	Mark 3	2.05 – 2.10 mm (0.0807 – 0.0827 in.)
No.2 clutch hub	Mark 4	2.10 – 2.15 mm (0.0827 – 0.0846 in.)
No.2 clutch hub	Mark 5	2.15 – 2.20 mm (0.0846 – 0.0866 in.)
No.2 clutch hub	Mark 6	2.20 – 2.25 mm (0.0866 – 0.0886 in.)
No.3 clutch hub	Mark 13	2.20 – 2.25 mm (0.0866 – 0.0886 in.)
No.3 clutch hub	Mark 14	2.25 – 2.30 mm (0.0886 – 0.0906 in.)
No.3 clutch hub	Mark 15	2.30 – 2.35 mm (0.0906 – 0.0925 in.)
No.3 clutch hub	Mark 16	2.35 – 2.40 mm (0.0925 – 0.0945 in.)
No.3 clutch hub	Mark 17	2.40 – 2.45 mm (0.0945 – 0.0965 in.)
No.3 clutch hub	Mark 18	2.45 – 2.50 mm (0.0965 – 0.0984 in.)
No.3 clutch hub	Mark 19	2.50 – 2.55 mm (0.0984 – 0.1004 in.)
No.3 clutch hub	Mark 20	2.55 – 2.60 mm (0.1004 – 0.1024 in.)
No.3 clutch hub	Mark 21	2.60 – 2.65 mm (0.1024 – 0.1043 in.)
No.3 clutch hub	Mark 22	2.65 – 2.70 mm (0.1043 – 0.1063 in.)
No.3 clutch hub	Mark 23	2.70 – 2.75 mm (0.1063 – 0.1083 in.)
No.3 clutch hub	Mark 24	2.75 – 2.80 mm (0.1083 – 0.1102 in.)
No.3 clutch hub	Mark 25	2.80 – 2.85 mm (0.1102 – 0.1122 in.)
No.3 clutch hub	Mark 26	2.85 – 2.90 mm (0.1122 – 0.1142 in.)
No.3 clutch hub	Mark 27	2.90 – 2.95 mm (0.1142 – 0.1161 in.)
Ball bearing	Mark A	2.15 – 2.20 mm (0.0846 – 0.0866 in.)
Ball bearing	Mark B	2.20 – 2.25 mm (0.0866 – 0.0886 in.)
Ball bearing	Mark C	2.25 – 2.30 mm (0.0886 – 0.0906 in.)
Ball bearing	Mark D	2.30 – 2.35 mm (0.0906 – 0.0925 in.)
Ball bearing	Mark E	2.35 – 2.40 mm (0.0925 – 0.0945 in.)
Differential side bearing adjusting shim thickness		
	Mark 1	1.90 mm (0.0748 in.)
	Mark 2	1.95 mm (0.0768 in.)
	Mark 3	2.00 mm (0.0787 in.)
	Mark 4	2.05 mm (0.0807 in.)
	Mark 5	2.10 mm (0.0827 in.)
	Mark 6	2.15 mm (0.0846 in.)
	Mark 7	2.20 mm (0.0866 in.)
	Mark 8	2.25 mm (0.0886 in.)
	Mark 9	2.30 mm (0.0906 in.)
	Mark 10	2.35 mm (0.0925 in.)
	Mark 11	2.40 mm (0.0945 in.)
	Mark 12	2.45 mm (0.0965 in.)
	Mark 13	2.50 mm (0.0984 in.)
	Mark 14	2.55 mm (0.1004 in.)
	Mark 15	2.60 mm (0.1024 in.)
	Mark 16	2.65 mm (0.1043 in.)
	Mark 17	2.70 mm (0.1063 in.)
	Mark 18	2.75 mm (0.1083 in.)
	Mark 19	2.80 mm (0.1102 in.)
Differential case side bearing preload (at starting)		0.8 – 1.6 N·m (8 – 16 kgf·cm, 6.9 – 13.9 in.·lbf)

Differential pinion to side gear backlash	0.05–0.20 mm (0.002–0.0079 in.)
Differential side gear thrust washer thickness	
None Mark	0.95 mm (0.0374 in.)
None Mark	1.00 mm (0.0394 in.)
None Mark	1.05 mm (0.0413 in.)
None Mark	1.10 mm (0.0433 in.)
None Mark	1.15 mm (0.0453 in.)
None Mark	1.20 mm (0.0472 in.)
Input shaft front oil seal drive in depth	0–0.5 mm (0–0.012 in.)
Shift outer lever tip play	0.1–0.5 mm (0.004–0.020 in.)

MX031–02

TORQUE SPECIFICATIONS

Part tightened	N·m	kgf·cm	ft·lbf
Transmission case x Transaxle case	29	300	22
Transmission case x Case cover	29	300	22
Transmission case protector x Transmission case	18	185	13
Rear bearing retainer x Transmission case	42	430	31
Output shaft front bearing lock plate x Transaxle case	18	185	13
Transaxle case receiver x Transaxle case	7.4	75	65in.·lbf
5th driven gear lock nut	123	1,250	90
Reverse idler shaft lock bolt	29	300	22
Control shaft cover	37	375	27
Reverse shift arm bracket x Transaxle case	18	185	13
No.3 shift fork x Shift fork shaft	18	185	13
No.1 lock ball assembly lock nut	37	375	27
No.2 lock ball assembly	23	230	17
Differential ring gear x Differential case	90	920	67
Engine mount bracket x Transmission case	52	530	38
Filler plug	49	500	36
Drain plug	49	500	36
Back–up light switch	44	450	33
Side bearing retainer x Transmission case	18	185	13
Clutch release bearing retainer x Transaxle case	7.4	75	65 in.·lbf
Straight screw plug (Shift fork shaft)	13	130	9
Straight screw plug (Reverse restrict pin)	13	130	9
Transaxle x Engine			
12 mm bolt	64	650	47
10 mm bolt	46	470	34
Rear end plate set bolt	9	95	82 in.·lbf
Stiffener plate x Engine	37	380	27
Stiffener plate x Transaxle	37	380	27
Engine LH mounting set bolt	64	650	47
Suspension crossmember x Body	113	1,150	83
Suspension arm x Rear axle hub	103	1,050	76
Lower arm x Suspension crossmember	132	1,350	98
Engine rear mounting x Transaxle	77	790	57
Engine rear mounting x Crossmember	64	650	47
Engine rear mounting through bolt	87	890	64
Engine front mounting x Transaxle	77	790	57
Clutch release cylinder x Transaxle	12	120	9
Engine front mounting x Transaxle	77	790	57
Engine front mounting x Body	73	740	54
Engine front mounting through bolt	96	980	71
Front exhaust pipe x Tail pipe	62	630	46
Front exhaust pipe x Exhaust manifold	62	630	46
Transaxle x Starter	39	400	29
LH engine mounting x Body	73	740	54
LH engine mounting stay x Transaxle	25	250	18

SHIFT AND SELECT LEVER SHAFT

COMPONENTS

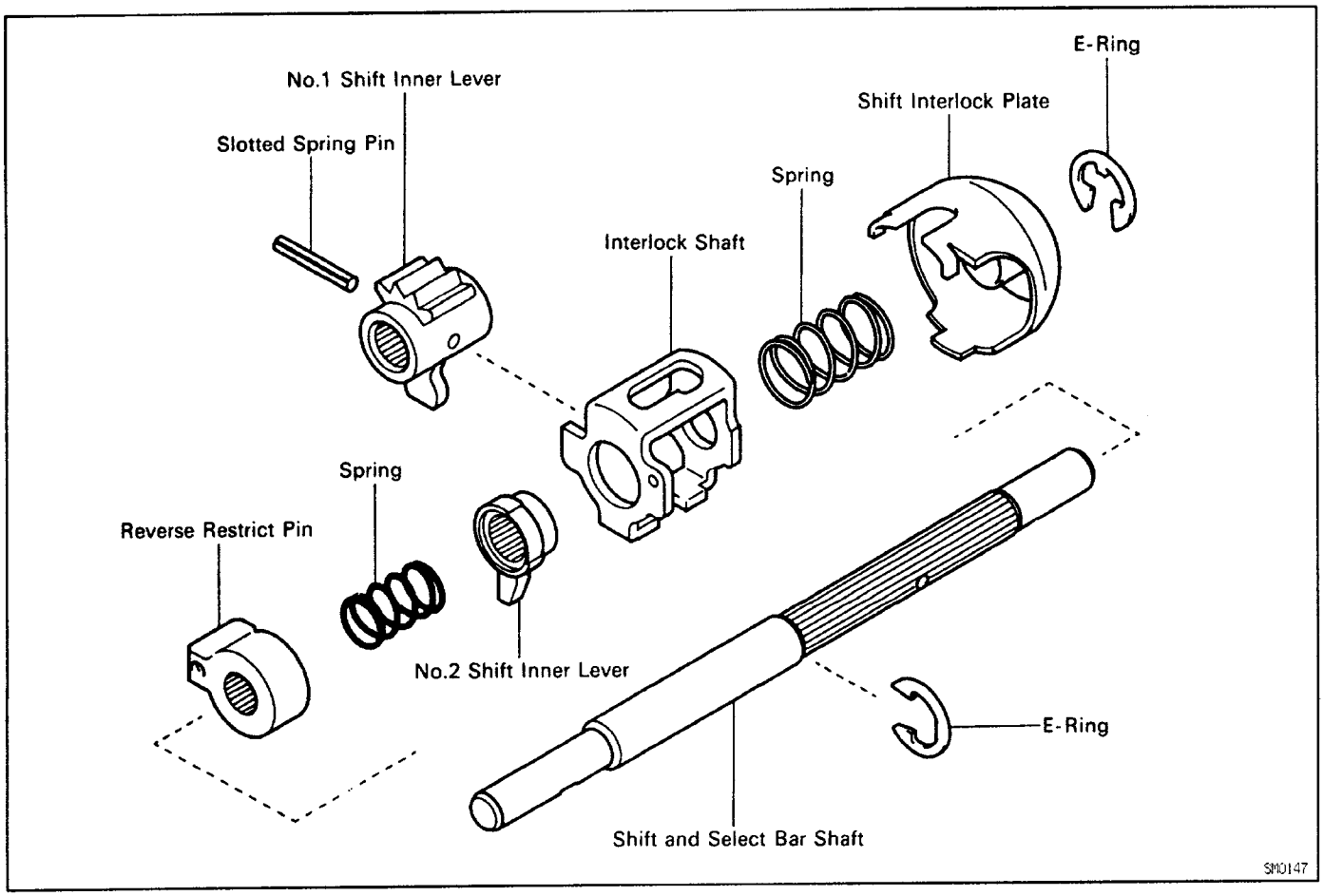

MX04Q–01

SHIFT AND SELECT LEVER SHAFT DISASSEMBLY

1. REMOVE SHIFT INTERLOCK PLATE

(a) Remove the E–ring.

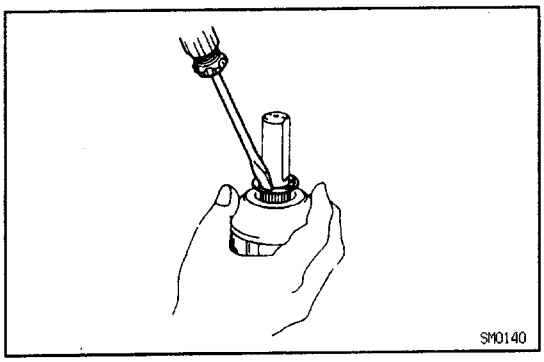

(b) Remove the interlock plate and spring.

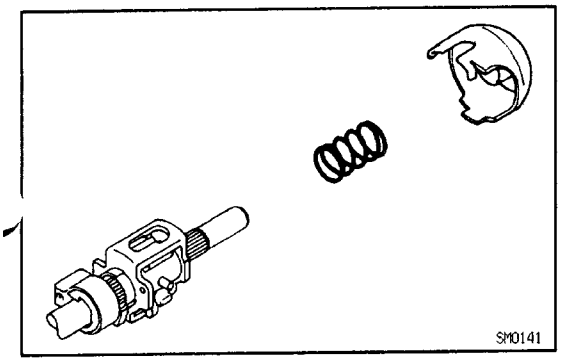

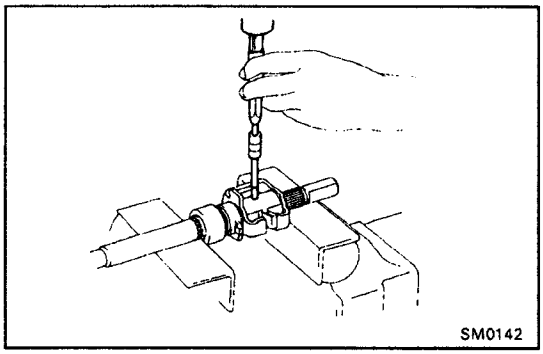

2. REMOVE INTERLOCK SHAFT, NO.1 SHIFT INNER LEVER, NO.2 SHIFT INNER LEVER, SPRING AND REVERSE RESTRICT PIN

(a) Using a pin punch and hammer, drive out the slotted spring pin.

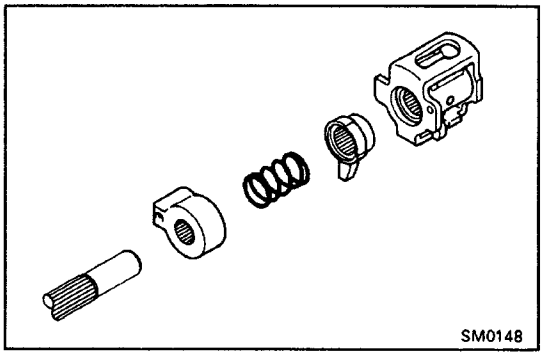

(b) Remove the interlock shaft, No.1 shift inner lever, No. 2 shift inner lever, spring and reverse restrict pin.

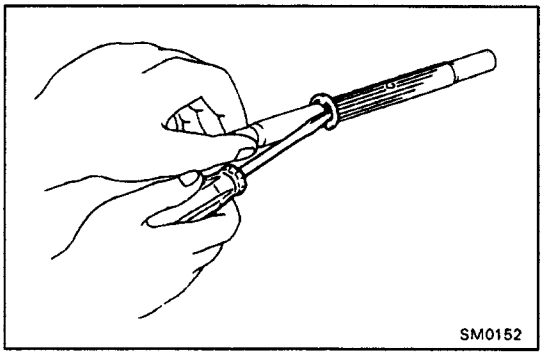

3. REMOVE E– RING

SHIFT AND SELECT LEVER SHAFT ASSEMBLY MX04R–01

(See page MX1–45)

1. APPLY MP GREASE TO PARTS. AS SHOWN

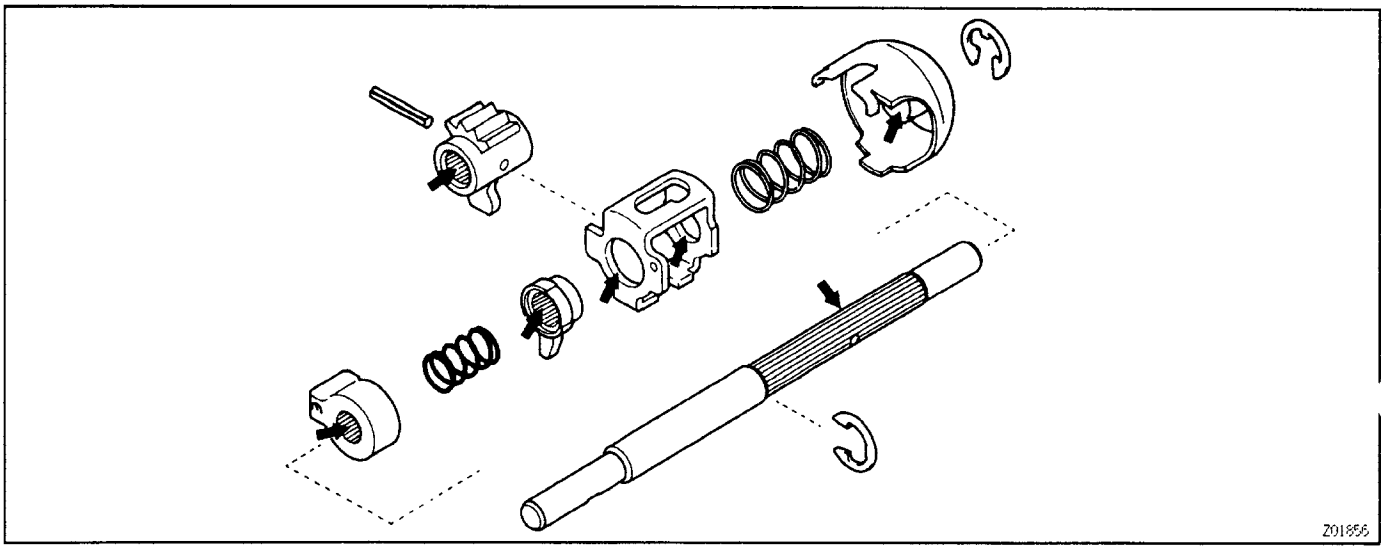

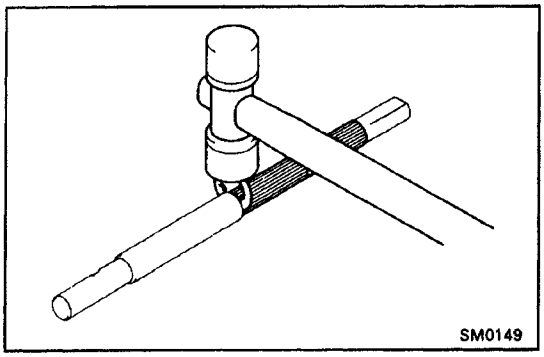

2. INSTALL E–RING

Using a plastic hammer, install the E–ring.

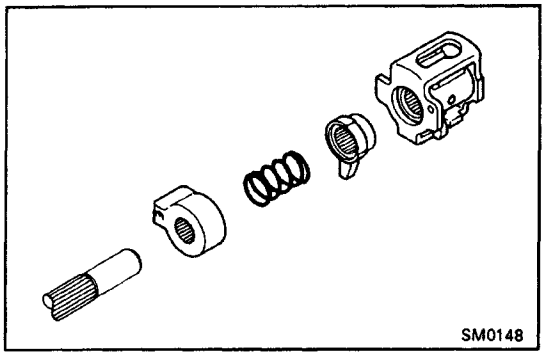

3. INSTALL REVERSE RESTRICT PIN, SPRING, NO.2 SHIFT INNER LEVER, NO.1 SHIFT INNER LEVER AND INTERLOCK SHAFT

(a) Install the reverse restrict pin, spring, No.2 shift inner lever, No.1 shift inner lever and interlock plate.

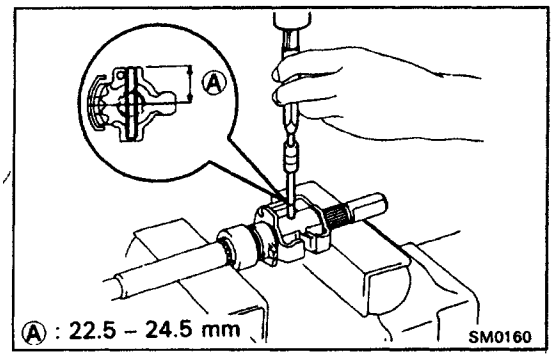

(b) Using a pin punch and hammer, drive in the slotted spring pin.

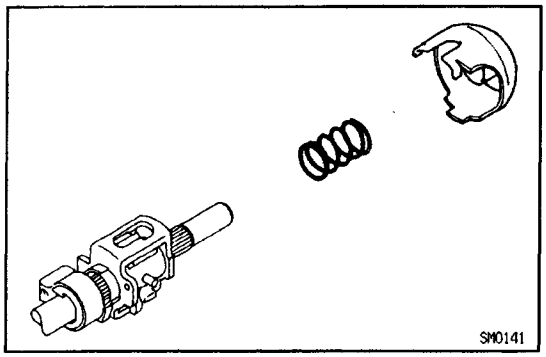

4. INSTALL SHIFT INTERLOCK PLATE

(a) install the spring and interlock plate.

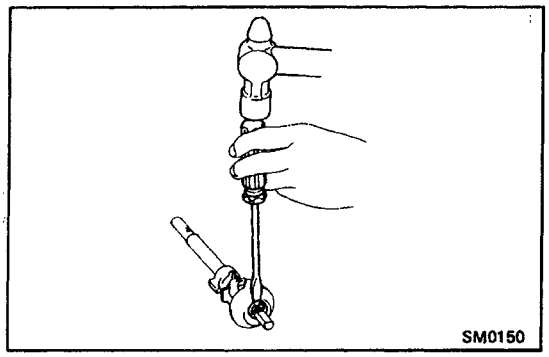

(b) Using a screwdriver and hammer, install the E–ring.

SHIFT LEVER AND CONTROL CABLE

COMPONENTS

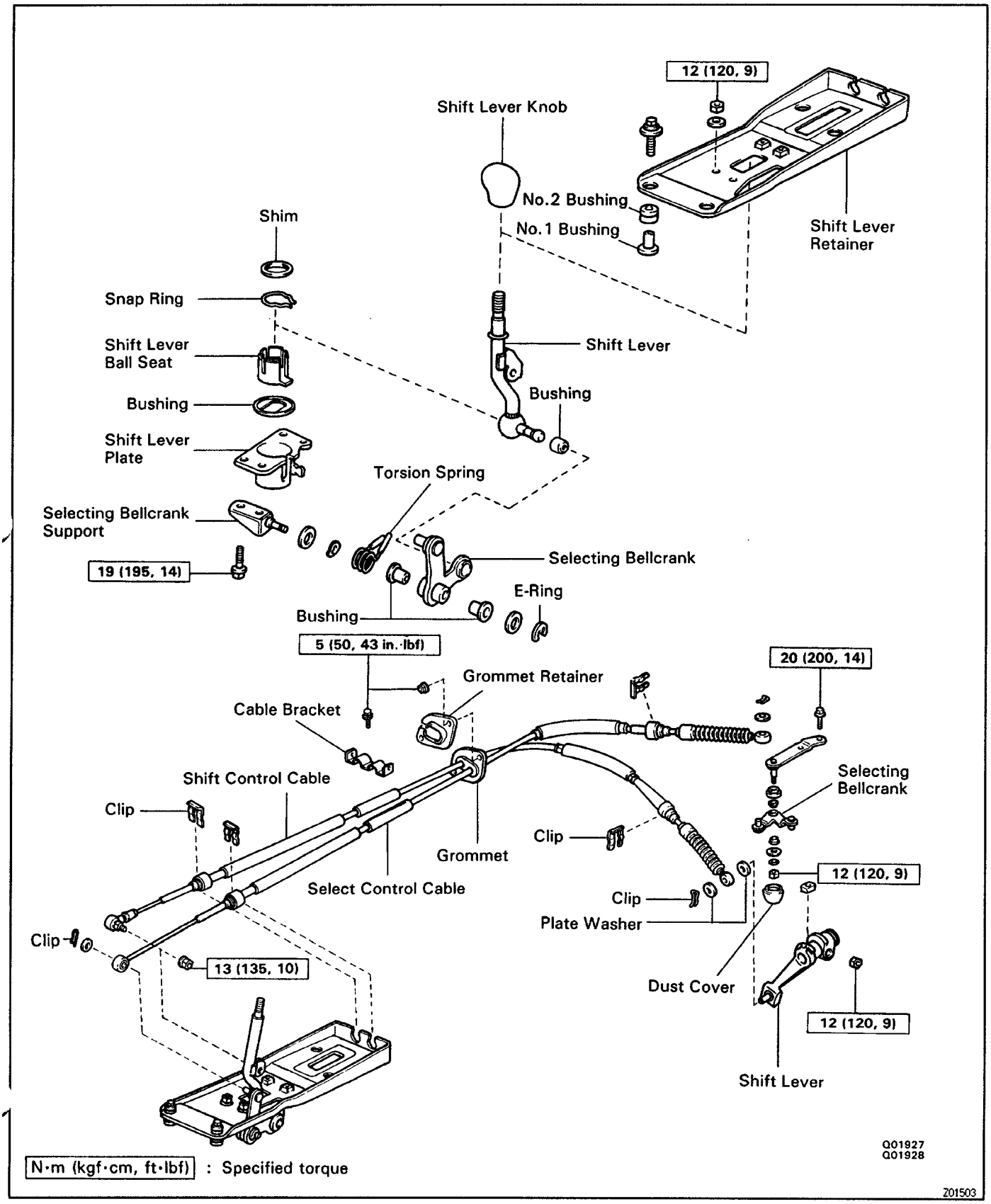

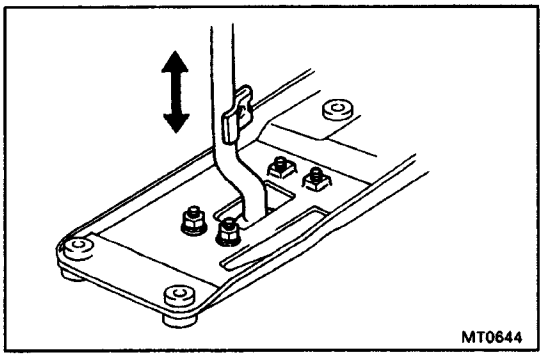

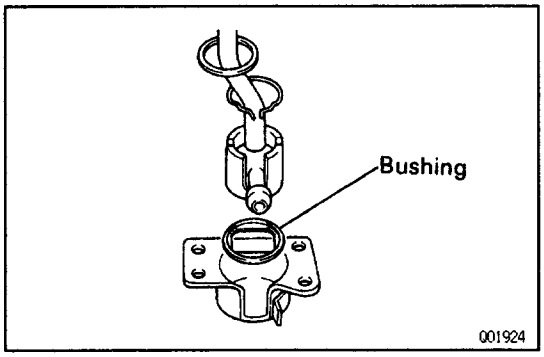

MX03G–02

INSPECTION OF SHIFT LEVER

INSPECT SHIFT LEVER PLAY

Check that there is no vertical play in the shift lever.
If there is any play, replace bushing.

TROUBLESHOOTING

You will find the troubles easier using the table well shown below. In this table, each number shows the priority of causes in troubles. Check each part in order. If necessary, replace these parts.

See Page / Parts Name / Trouble	–	MX1–2	–	MX1–19	MX1–19	MX1–19	MX1–65	MX1–19	MX1–19	MX1–19	MX1–19	MX1–32,39	MX1–32,39			
	Oil (Level low)	Oil (Wrong)	Oil (Level too high)	Gasket (Damaged)	Oil seal (Worn or damaged)	–O–Ring (Worn or damaged)	Control cable (Faulty)	Locking ball spring (Damaged)	Shift fork (Worn)	Gear (Worn or damaged)	Bearing (Worn or damaged)	Synchronizer ring (Worn or damaged)	Shifting key spring (Damaged)			
Noise	1	2								3	3					
Oil leakage			1	2	2	3										
Hard to shift or will not shift							1					2	3			
Jumps out of gear								1	2	3	3					

V00310